OPERATING A STANDARD DELAY "ON RELEASE" WITH MOMENTARY CONTACT...

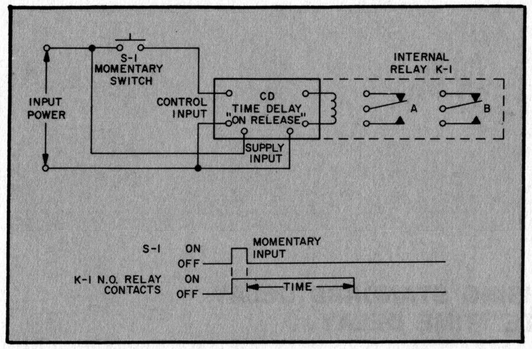

...USING STANDARD CD DELAY "ON RELEASE" DELAY TIMER

The usual hookup of a CD series time delay "on release" unit incorporates a SPST-N.O. toggle switch which allows the control input, and therefore the load contacts, to remain ON unattended for extended periods of time. Under these conditions, when the delay "on release" is desired, the switch is thrown to the OFF position and the load contacts drop out after a delay period.

The circuit above shows that the control input need only be a momentary contact closure of 50 milliseconds or longer. The circuit operates as follows:

When the momentary switch S-1 closes the load switching contacts K-1A and K-1B pull-in (this requires approximately 50 milliseconds). The timing begins as soon as the switch S-1 opens, and the relay contacts K-1A and K-1B delay on their release.

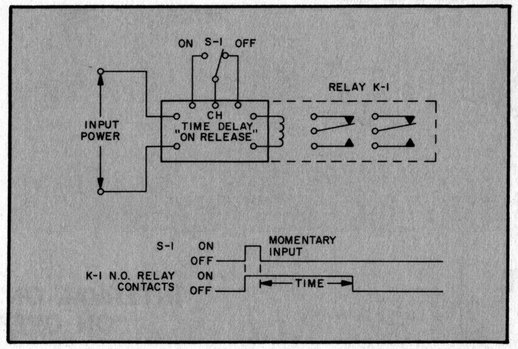

...USING STANDARD CH DELAY "ON RELEASE" DELAY TIMER

This is the same hookup as is normal for the CH series time delay "on release." In this case, the only difference is the fact that the S-1 switch closure need only be momentary; 50 milliseconds or longer.

Standard CD and CH series solid state time delay relays are stocked by leading electronic parts distributors throughout the United States and Canada.

TYPICAL APPLICATIONS FOR CD/CH TIME DELAY RELAYS

Machine tool sequencing
Motor starting circuits
Vending machines
Molding machine controls
Container-filling control
Welding timing control
Safety device control
Data processing operations
Warm-up or turn-on delay
Photographic process control
Heat sealing
Induction heating
Elevator controls
Die casting
Alarm circuits
Vacuum processing
X-ray machines
Injection molding
Electron tube warm-up
Conveyor control

POTTER & BRUMFIELD

DIVISION OF AMERICAN MACHINE & FOUNDRY COMPANY • PRINCETON, INDIANA 47570 • Phone: Area Code 812 – 385-5251
TWX: 812-291-4125

CANADA Manufacturing Facility • Potter & Brumfield, Division of AMF Canada Limited • 135 Oxford Street, Guelph, Ontario • Phone: 822-0390

EXPORT SALES AMF International, Division of American Machine & Foundry Company, 261 Madison Avenue, New York 16, N. Y. Phone: MUrray Hill 7-3100

FORM NO. 13C186 9-66

PRINTED IN U.S.A.

time delay circuit suggestions

POTTER & BRUMFIELD CD/CH SERIES SOLID STATE TIME DELAY RELAYS

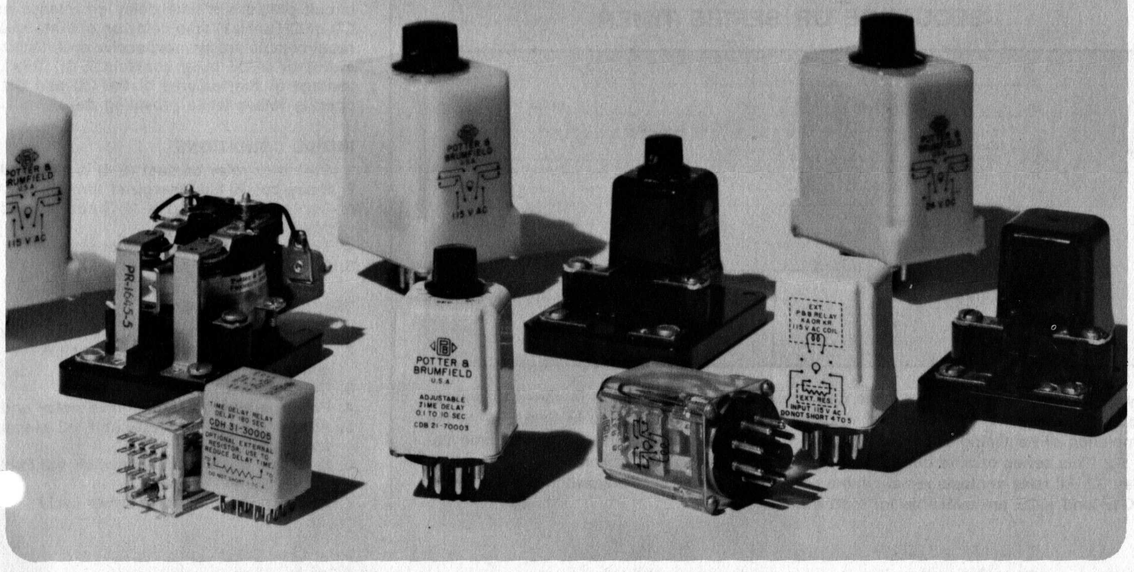

suggestions for time delay circuits

AUTOMATIC RECYCLING TIMER

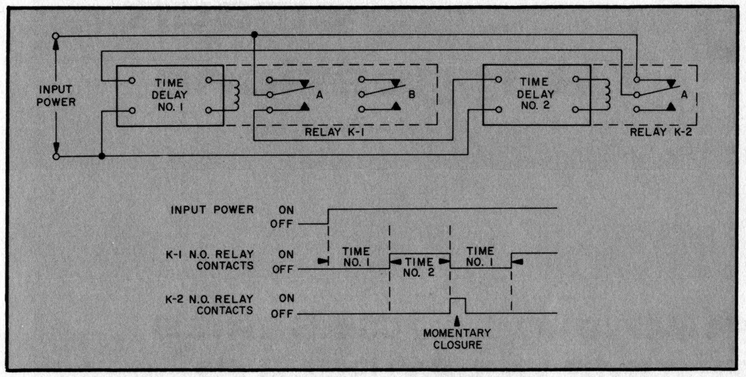

Two standard P&B time delay on operate relays (CD-38 or CH-38) may be interconnected as shown to provide an automatic recycling timer. Initially, time delay relay #1 is energized through relay contacts K-2A on time delay relay #2. When #1 times out, the relay contacts K-1A and K-1B close and energize time delay relay #2. When #2 times out, contacts K-2A open momentarily and automatically reset the circuit for the next cycle.

The timing cycle will repeat continuously until the input power is turned OFF.

If two adjustable time delay relays are used, the delay time of #1 and #2 may be individually set for various delay times.

K-1B contacts are to be used for load switching. Note that the relays, K-1 and K-2, are internally mounted in the CD-38 and CH-38 series relays.

SEQUENCE OR SERIES TIMER

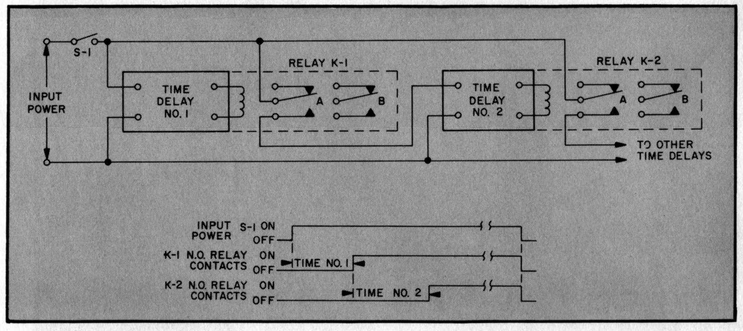

Any number of P&B CD or CH* time delay relays may be connected in series to provide sequential timing. When switch S-1 is closed, time delay #1 begins to time out. At the completion of its timing period, #1 closes relay contacts K-1A which energize time delay #2. This series of time delays may be extended through relay contacts K-2A on time delay #2. All relay contacts remain in the energized position until the switch S-1 is opened.

K-1B and K-2B are available for load switching.

OBTAINING A TIME DELAY ON RELEASE WITH A STANDARD TIME DELAY "ON OPERATE" RELAY

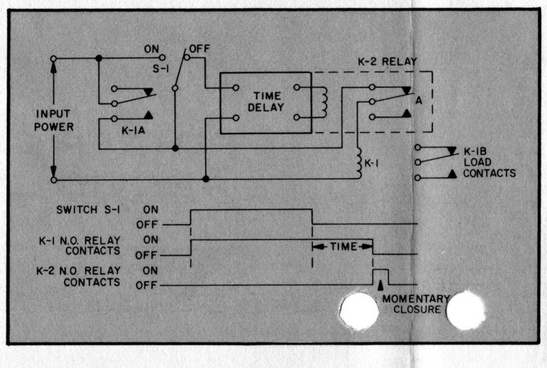

Time delay relay applications usually require a delay on operate. The P&B line of standard time delay relays includes many styles of enclosures and operating features. Most of these relays provide a delay of operate; however, several do provide a delay on release. To offer greater circuit design flexibility the following circuit provides a time delay on release using a standard P&B CD or CH series* time delay on operate relay. The only additional requirements are an inexpensive switching relay (K-1) and a SPDT switch or SPDT relay contacts (S-1). This permits taking full advantage of the features of the CD and CH series time delay on operate relays while providing the delay on release function.

INITIAL CONDITIONS

1. Switch or relay contact (S-1) is switched to the ON position
2. Relay coil K-1 is energized through K-2A—N.C. contacts
3. Contacts K-1A and K-1B (load contacts) are in energized position
4. Time delay relay is not energized
5. Relay coil K-2 is not energized

TIMING CONDITIONS

1. Switch or relay contact (S-1) is switched to the OFF position
2. Relay coil K-1 is held in through K-1A—N.O. and K-2A—N.C. contacts
3. Contacts K-1B remain energized
4. Power is now applied to time delay and begins to time out
5. After unit times out, relay coil K-2 is energized and breaks the power to K-1
6. K-1A and K-1B contacts switch the load and deenergize K-2 relay coil
7. Unit is now ready for another cycle

"INTERVAL ON" USING STANDARD DELAY "ON OPERATE" TIME DELAY...

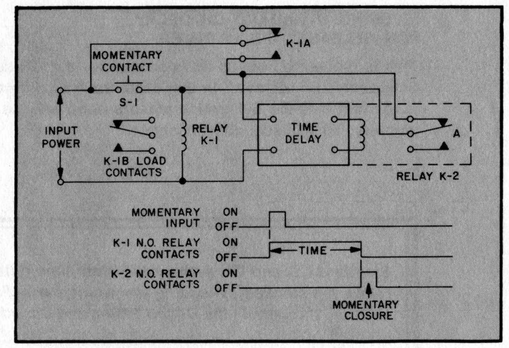

...INITIATED WITH MOMENTARY CONTACT

This circuit uses a standard time delay on operate CD or CH series* relay, momentary contact switch and an auxiliary relay. When the momentary contact switch S-1 is closed, auxiliary relay K-1 is energized and closes contacts K-1A. This action locks the input power on to the time delay relay.

After the time delay relay completes its timing interval, relay contacts K-2A open and release relay K-1. The circuit is then ready for another operation.

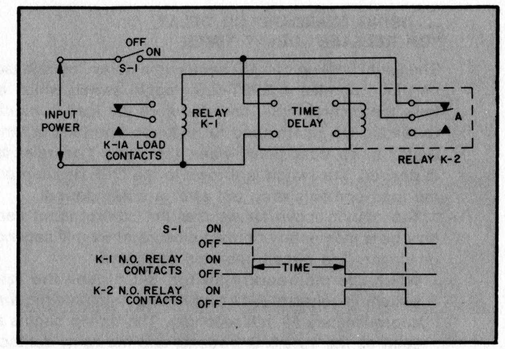

...INITIATED WITH SPST SWITCH

This circuit also uses a standard time delay on operate CD or CH series* relay, auxiliary relay and a SPST switch. When S-1 is turned ON, the relay K-1 pulls in through contacts K-2A, operating the load switching contacts K-1A. This action also applies power to the time delay and after it completes its timing interval K-2 operates, deenergizing relay K-1. When the switch S-1 is turned OFF, relay K-2 drops out and the circuit is ready for another cycle.

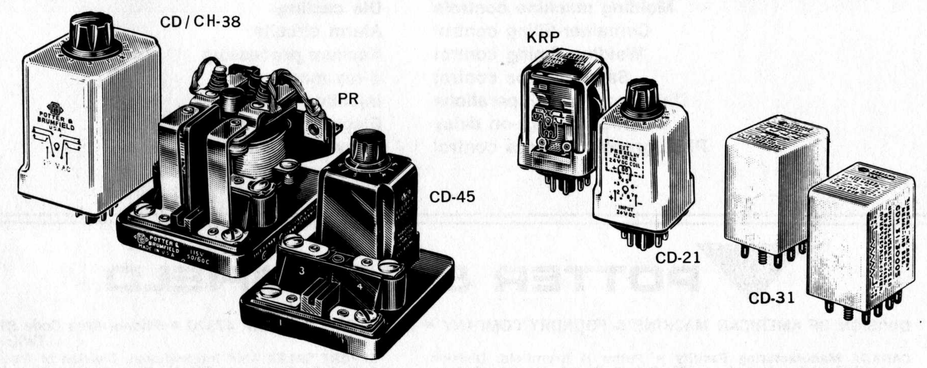

*Note: Relay K-2 is internally mounted in the CD-38 and CH-38 and externally mounted for the CD-21, CD-31 and CD-45 style time delays.