Other Titles Popular

SKILLFACT Books offer the do-it-yourself and hobbyist reader an opportunity to build a most valuable low-cost library. Written by experts in their fields in language anyone can understand, these books clearly explain technical subjects, show you how to save money by doing-it-yourself, how to build practical projects, and how to select the best values in equipment.

601-635 care and REPAIR of your SMALL HOME APPLIANCES
602 Do your own ELECTRIC WIRING Modernizing and Repair
606 fascinating, easy-to-build ELECTRONIC GAMES
607 know about HI-FI AND STEREO
609 Getting the most from your TAPE RECORDER
610 know about ELECTRONIC ORGANS
612 the FUN of HAM RADIO
614 Dictionary of ELECTRONIC TERMS
617 Picture Guide to TV TUBE REPLACEMENT
618 the FUN of SHORT-WAVE RADIO LISTENING
619 easy-to-build TRANSISTOR PROJECTS
620 Getting the most from your HOME POWER TOOLS
622 AMATEUR PHOTOGRAPHY for the Beginner
623 Understanding the NEW MATH
624 Do your own MINOR HOME REPAIRS
625 let's cook . . . BARBECUE
627 it's easy to PLAY THE GUITAR for fun
629 know about MODEL ROADRACING
632 know about CITIZENS BAND RADIO
633 understanding WEATHER MAPS AND REPORTS
634 KNOW ABOUT ANTIQUES
636 care and REPAIR of your SMALL GASOLINE ENGINES
637 let's cook . . . SAUCES
638 CONCRETE POURING AND PATCHING for the Homeowner
639 Useful ELECTRONICS Tables and Formulas
640 AMATEUR ASTRONOMY for the BEGINNER
641 it's easy to . . . READ ELECTRONICS DIAGRAMS
642 simplify math: learn to use THE SLIDE RULE
643 let's cook . . . LEFTOVERS
644 let's prepare . . . SALADS
645 INTERIOR DECORATING IDEAS
646 TELESCOPES for the amateur ASTRONOMER
647 helpful facts about TV and FM ANTENNAS including COLOR TV
649 learn to KNIT the EASIEST WAY
650 Getting the most from your HI-FI and STEREO SYSTEM
651 it's easy to SEW with PATTERNS
652 care and repair of your TYPEWRITER
653 understanding Fundamentals of COMPUTERS
655 101 GIFT WRAPPING HINTS
656 STAMP COLLECTING
661 understanding and using your TAPE RECORDER
663 ELECTRIC WIRING IMPROVEMENTS for the HOME
664 TELEVISION—How it Works
665 Basic ELECTRONICS CIRCUITS
666 ELECTRIC MOTORS and GENERATORS
667 Picture Guide to TV TROUBLES
668 Introduction to BASIC ELECTRONICS
669 ELECTRONIC TEST EQUIPMENT
670 Fundamentals of TRANSISTORS
671 Easy-to-build HAM RADIO PROJECTS
672 Electricity/Electronics SCIENCE PROJECTS
673 COMPUTER PROGRAMMING Fundamentals

EDITORS and ENGINEERS, LTD.
NEW AUGUSTA, INDIANA

SKILLFACT™ LIBRARY • 671

easy-to-build HAM RADIO PROJECTS

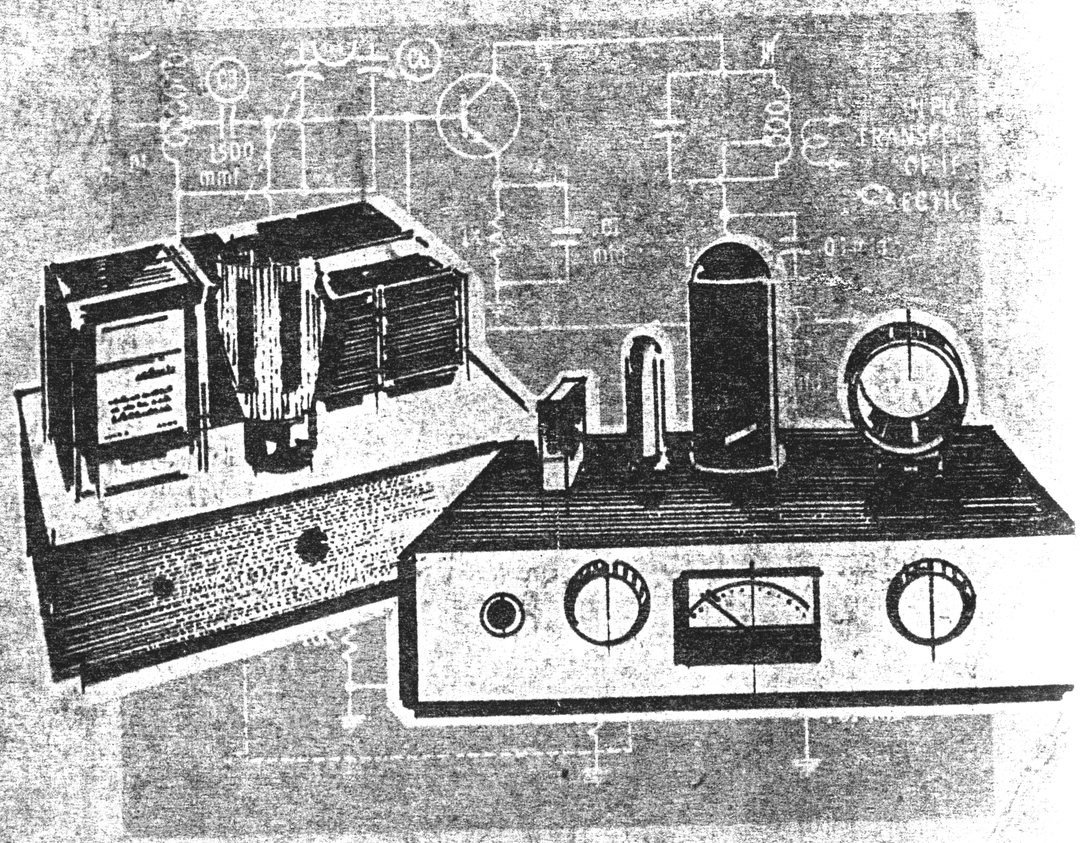

easy-to-build HAM RADIO PROJECTS

by Charles Caringella, W6NJV

EDITORS and ENGINEERS, LTD.
New Augusta, Indiana

FIRST EDITION

FIRST PRINTING — JUNE, 1967

Copyright © 1967 by Editors and Engineers, Ltd., New Augusta, Indiana. Printed in the United States of America.

All rights reserved. Reproduction or use, without express permission, of editorial or pictorial content, in any manner, is prohibited. No patent liability is assumed with respect to the use of the information contained herein. While every precaution has been taken in the preparation of this book, no warranty is made and Editors and Engineers. Ltd. expressly disclaims any liability for results of the use hereof, liability being assumed by the user hereof.

Library of Congress Catalog Card Number: 67-24254

PREFACE

Amateur radio has afforded thousands of radio enthusiasts the opportunity to acquire skills in radiocommunications and technology. For many, amateur radio has been the start of a professional career in electronics, as well as providing hours of enjoyment as a hobby.

Constructing your own equipment is rewarding as an educational experience. In addition, there's always the feeling of accomplishment when operating your own "home brew" rig, not to mention the satisfaction which comes from saving money.

Construction projects for the beginner, as well as the pro, are described in this book. Included are projects for the Novice, Technician, and General-Class amateurs.

For instance, the simple novice transmitter for 80 and 40 meters described in Chapter 2 is a typical beginner's project. The beginner is helped along by the pictorial wiring diagrams, in addition to schematic diagrams, chassis-cutout location drawings, photos, and complete parts lists.

The latest techniques are incorporated in the low-noise 2-meter converter described in later chapters. For the advanced amateur the all-band, phone/c-w transmitter, and the 2-meter phone transmitter described in the last two chapters should be of special interest.

Here's hoping you enjoy building and operating these projects as much as I did in preparing them for this book.

CHARLES CARINGELLA, W6NJV

CONTENTS

CHAPTER 1

CONSTRUCTION TECHNIQUES 7
Chassis and Panel Layout—Drilling and Cutting the Holes —Mounting the Components and Wiring—Soldering

CHAPTER 2

NOVICE TRANSMITTER FOR 40 OR 80 METERS 15
Circuit Description—Construction—Testing the Transmitter—Operating the Transmitter

CHAPTER 3

30-WATT NOVICE TRANSMITTER FOR 80, 40, AND 15 METERS 29
Circuit Description—Construction—Tuning—Operation

CHAPTER 4

BALUN ANTENNA-MATCHING UNIT 39
Dipole Antennas—The Balun

CHAPTER 5

CRYSTAL-CONTROLLED CONVERTERS FOR 10, 15 OR 20 METERS 47
Circuit Description—Intermediate Frequency—Construction —Converter Alignment

CHAPTER 6

LOW-NOISE CRYSTAL-CONTROLLED 2-METER CONVERTER 58
How It Works—Construction—Aligning the Converter

CHAPTER 7

ALL-BAND, PHONE-CW TRANSMITTER 71
How It Works—Construction—Transmitter Operation

CHAPTER 8

TWO-METER PHONE TRANSMITTER 85
Circuit Description—Construction—Operation

CHAPTER 1

CONSTRUCTION TECHNIQUES

The amateur radio construction projects described in the following pages were all built with the simple hand tools, materials, and techniques outlined in this chapter. Contrary to what some people may think, it does not take a large selection of specialized tools for the amateur to build neat-appearing, professional-quality equipment. As a matter of fact, only a few basic hand tools and a little time and patience are required. Of course, the amount of effort and energy expended is greatly reduced with a complete assortment of tools, particularly machine tools; however, they are not necessary.

The availability of chassis, cabinets, and other types of enclosures made of aluminum makes the job much easier for the amateur. Aluminum is relatively soft, so it is easy to work with hand tools—in many instances, ordinary wood-working tools can be employed. The tools illustrated in Fig. 1-1 represent the minimum requirement in hand tools necessary for the mechanical construction of the projects in this book. Each one is identified by a number in the photo. The tools, and their purpose are as follows:

1. Hand drill—should have a 3-jaw chuck that will accommodate up to ¼-inch drill bits.
2. ¼-inch drill bit—used for drilling mounting holes for slug-tuned coil forms and to drill pilot holes for the reamer (item 6).

3. No. 25 drill bit—used for drilling holes for 6-32 screws.
4. No. 30 drill bit—used for drilling holes for 4-40 screws. This drill bit should also be used to drill pilot holes for the ¼-inch drill.

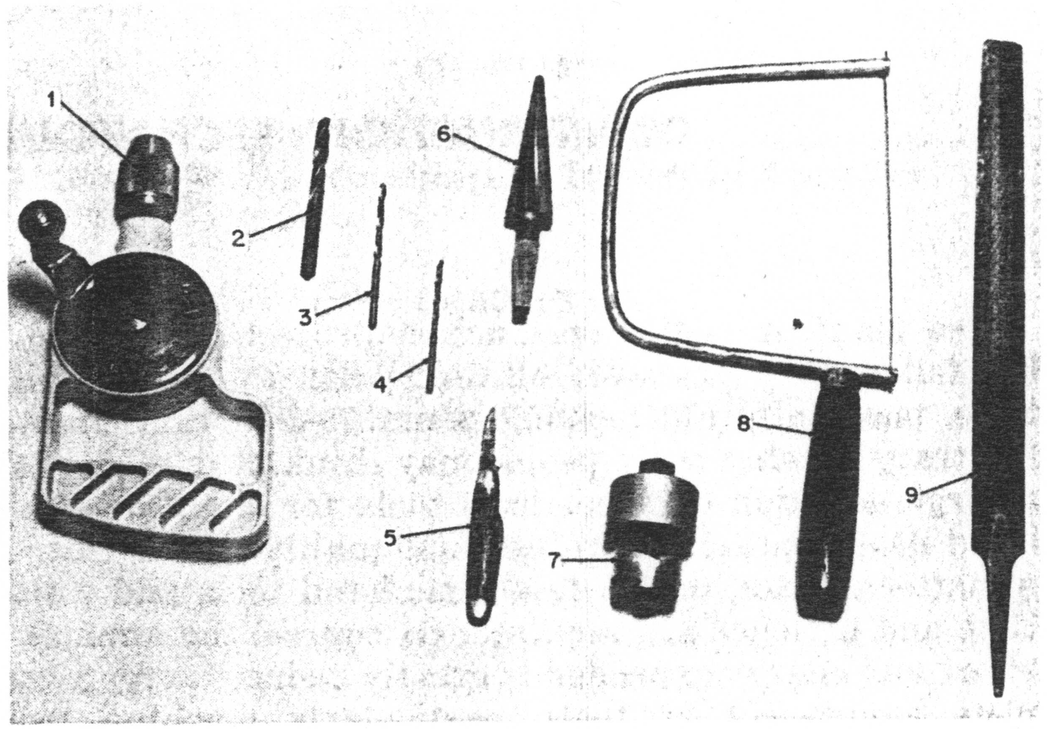

Fig. 1-1. Basic hand tools needed for drilling and cutting holes.

5. Small penknife—used for removing burrs around drilled holes. A penknife works quite well on soft aluminum.
6. Reamer—this unit fits into a standard woodworking brace; however, models with a handle are available. the model shown will cut any size hole up to ⅞ inch in diameter.
7. Chassis punch—1-5/32-inch diameter, used in punching holes for octal sockets and plugs used in projects in this book.
8. Spiral coping saw blades and holder—this device will cut any shape hole in aluminum or steel.
9. Half-round wood file—for cleaning holes cut with the spiral coping saw.

For the beginner without tools, the foregoing list will represent a rather small outlay of capital. The "old-timer" constructor may also find some useful tips in this chapter, particularly since several techniques are described which have not appeared in other handbooks.

CHASSIS AND PANEL LAYOUT

The key to successfully completing a neat-appearing piece of electronic equipment begins with the accurate layout of hole locations and, therefore, the proper location of components. In some circuits, such as high-frequency r-f circuits, the proper placement of components can mean the difference between success or failure in the performance of the units. Each project in this book is accompanied by a chassis and panel layout drawing. Follow the dimensions listed very carefully, and take enough time to lay them out accurately.

First cover the chassis or panel with a piece of graph paper. (If graph paper is not available, a piece of ordinary wrapping paper will suffice). The paper should be drawn tight and taped into place. It serves a dual purpose —all the dimension lines can be drawn on it directly, yet it will protect the chassis or panel finish from marks and scratches.

With the aid of a ruler or square, locate all the center lines of the holes on the paper. Once all of the center lines have been drawn, double check to make sure they are correctly located, then center-punch each one of them through the paper. If a regular center punch is not available, any thing with a sharp point, such as an ice pick or nail, will suffice. Aluminum is quite soft and will mark easily, so only a gentle tap to the center punch with a hammer is necessary. Anything more than a gentle tap may put a large dent in the aluminum, resulting in a messy job.

After all the holes have been center-punched, the paper may be removed, and you're ready for the next operation.

DRILLING AND CUTTING THE HOLES

Components such as tube sockets, r-f connectors, transformers, and other parts used in the projects are mounted with either 4-40 or 6-32 screws. A No. 30 drill bit is used for drilling the mounting holes for 4-40 screws, and a No. 25 drill bit for the 6-32 screws. These are clearance drills, slightly oversize, to allow for minor inaccuracies in layout and drilling. Where mounting holes are needed, either a No. 30 or a No. 25 drill is called for in the layout drawing.

A 5/8-inch hole is required for the seven-pin miniature tube sockets and a 3/4-inch hole for the nine-pin sockets. These holes, or for that matter any size hole up to 7/8-inch in diameter, can be made with the reamer shown in Fig. 1-1. This versatile tool eliminates the need for several smaller chassis punches, and it is capable of making a very "clean" hole.

The best method for making these larger holes is to first draw an outline of the hole on the chassis with a compass. The previously made center-punch marks serve

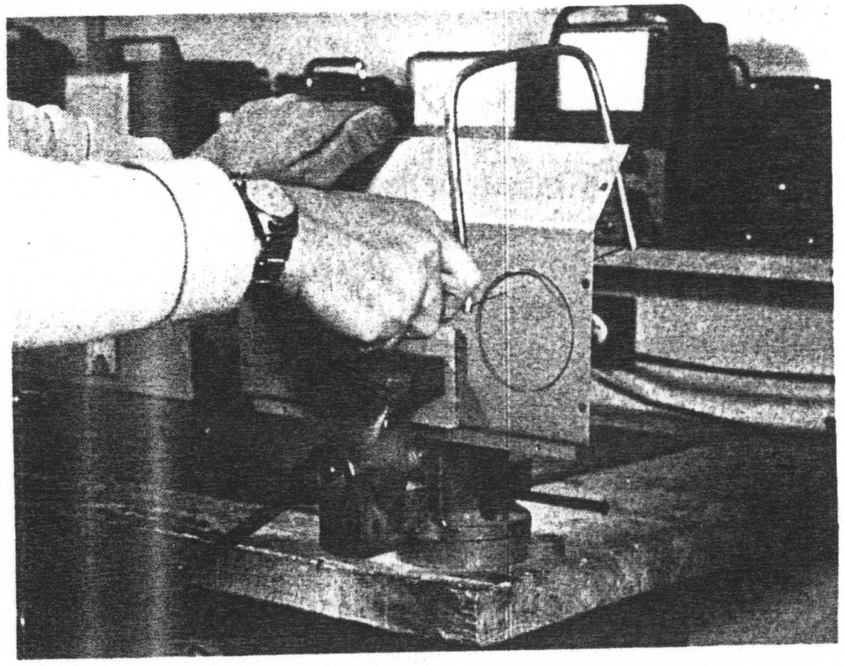

Fig. 1-2. Cutting a large meter hole on a panel with a spiral-blade coping saw.

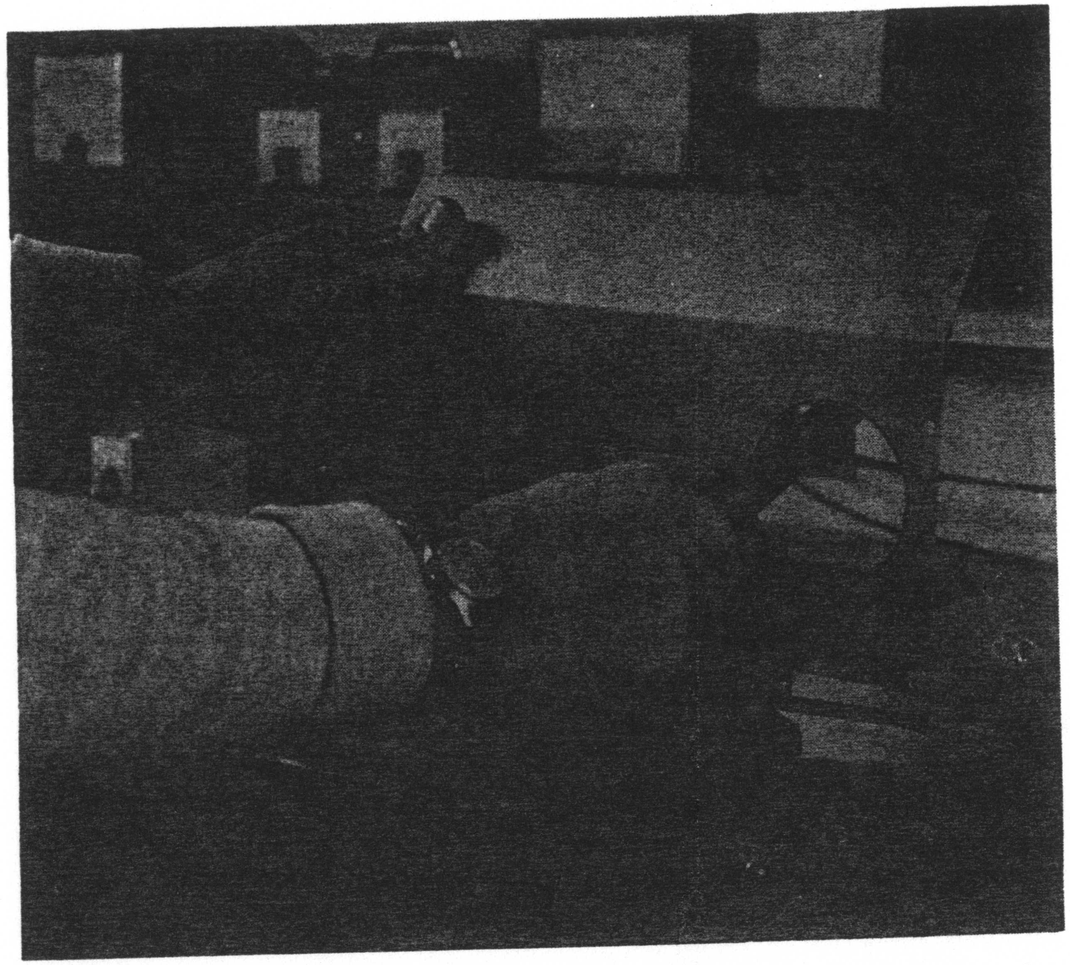

Fig. 1-3. Using a half-round wood file to "clean" up the rough edge made by the coping-saw blade.

as the center point for the compass. Next, a pilot hole is drilled with the No. 30 drill, followed by the 1/4-inch drill. Finally, the reamer is used to enlarge the hole; the compass outline serves as the stop guide. Remove all burrs with a pen knife when the hole has been completed.

A 1-5/32-inch chassis punch is the only one that needs to be purchased. This size is used for all the octal-socket and octal-plug holes employed in this book.

The spiral-blade coping saw shown in Fig. 1-1 is used to cut large meter holes, and the like. This saw is an extremely versatile tool; it will literally cut any shape and size hole in aluminum, steel, wood, plastic, etc. Fig. 1-2 illustrates its use. The outline of the meter hole has been drawn on a panel and the spiral coping saw is used to

cut the hole, while following the guide line, in the aluminum.

Finally, a half-round wood file can be used to "clean" up the rough line made by the coping saw blade, as shown

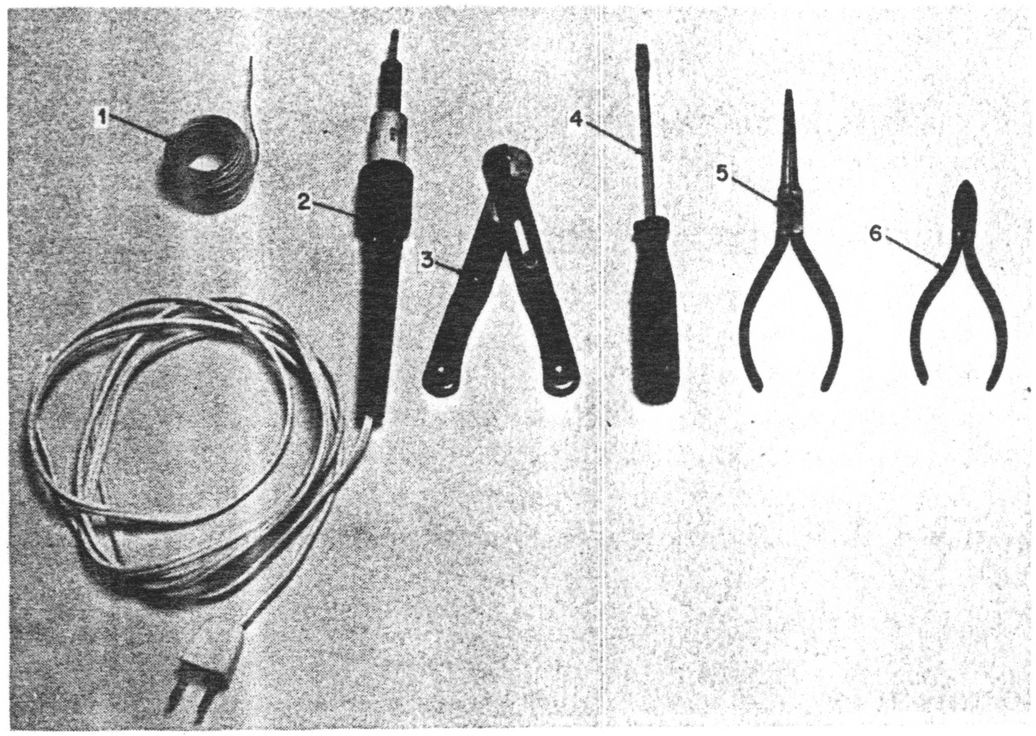

Fig. 1-4. Tools needed for making electrical connections.

in Fig. 1-3. The wood file works quite well on the soft aluminum.

MOUNTING THE COMPONENTS AND WIRING

A complete parts list for each project in the following chapters is given at the end of the chapter. Fig. 1-4 shows the tools necessary for mounting the components, installing the wiring, and soldering the connections. As for Fig. 1-1, each item in Fig. 1-4 is identified by a number. They are as follows:

1. Rosin-core solder—used for soldering all electrical connections.

2. Soldering iron—this pencil-type iron is sufficient for all projects in this book.
3. Wire strippers—used to remove the insulation from hook-up wire.
4. Screwdriver—used for mounting screws and components.
5. Needle-nose pliers—used for mounting wires to terminals.
6. Diagonal cutters—used for cutting hook-up wire.

In addition to the tools illustrated, an adjustable wrench will be needed to tighten the hex nuts used to mount switches, coil forms, phone jacks, etc.

A small quantity of hook-up wire will be needed to wire the units. It is preferable to use assorted colors, such as red for high-voltage lines, green for filament leads, black for grounds, etc. This will simplify circuit tracing if the unit should ever require troubleshooting. No. 20 stranded hook-up wire will be adequate for all wiring purposes in this book. However, for wiring high-frequency r-f circuits it is advisable to use either No. 18 or No. 20 bare, tinned-copper wire. R-f leads should be kept as short as possible. They should be run directly from point to point in the circuit and right angle bends should be avoided. Make sure the wire does not short to the chassis or to other leads.

Component leads and wiring in general should not depend on solder joints for mechanical support. The wire lead should be wrapped around the solder terminal at least once, and crimped tight with the needle-nose pliers, as shown in Fig. 1-5. Solder only ensures a good electrical

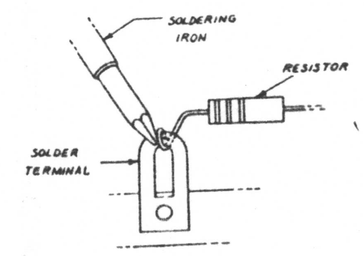

Fig. 1-5. The proper method of making a connection to a terminal.

path between the wire and the terminal, and it should not be counted on for mechanical support.

SOLDERING

The successful performance of home-built electronic equipment depends on the workmanship used in making soldered connections. Proper solder connections are not at all difficult to make, if the following precautions are observed.

First and foremost, it is most important to use the proper solder. Rosin-flux core solder is the only type of solder to use in electronic equipment. Rosin flux is completely noncorrosive and electrically nonconductive when it is cold and in the solid state. Acid-core solder should not, under any circumstances, be used. This type of solder is extremely corrosive and electrically conductive, even when it has cooled, causing shorts between points in the wiring and shorts from the wiring to the chassis.

A good quality soldering iron or soldering gun, between 50 and 100 watts, should be used to make the soldered connections. The tip of the iron should be bright and clean, and free of excess solder. Apply the tip of the soldering iron directly to the work, touching both the wire and the solder terminal simultaneously. The solder should be applied to the point of contact between the iron and the work. Avoid the excessive use of solder; use just enough to flow around the wire and onto the terminal. Also, avoid overheating the connection. Some components can be damaged easily if they are subjected to excessive heat. The finished connection should be smooth and semi-glossy in appearance.

CHAPTER 2

NOVICE TRANSMITTER FOR 40 OR 80 METERS

The FCC Rules and Regulations governing the Amateur Radio Service provide for novice-class operation in segments of the 80-, 40-, 15-, and 2-meter amateur bands. Novice operators have only limited privileges. For example, only A1-type emission (telegraphy) is allowed in the novice segments of the 80-, 40-, and 15-meter bands and the maximum allowable power input to the stage supplying power to the antenna is 75 watts. In addition, the novice transmitter must be crystal controlled.

The crystal-controlled c-w transmitter (telegraphy transmitter) described in this chapter will operate in the 80- and 40-meter novice bands. Band changing is accomplished by simply changing the crystal and the output tank coil to the band desired. The d-c power input is approximately 10 watts; thus, it meets the FCC requirements with respect to both power input and crystal-controlled carrier emission. Frequency limitations in the 80-meter band are 3700 to 3750 kilohertz (kHz), and in the 40-meter band, 7150 to 7200 kHz.

CIRCUIT DESCRIPTION

The one-tube transmitter described here is actually an oscillator-transmitter unit: that is, the tube functions as

a crystal oscillator and also delivers r-f power to the antenna. This one-tube, two-band transmitter makes an excellent beginner's construction project. The transmitter and power supply are built on separate chassis. In addition, the power supply and some of the transmitter components can be utilized in the higher-power, three-band novice transmitter described later.

The schematic of the transmitter section is given in Fig. 2-1, and a close-up view of it can be seen in the photo of Fig. 2-2. A complete parts list is given at the end

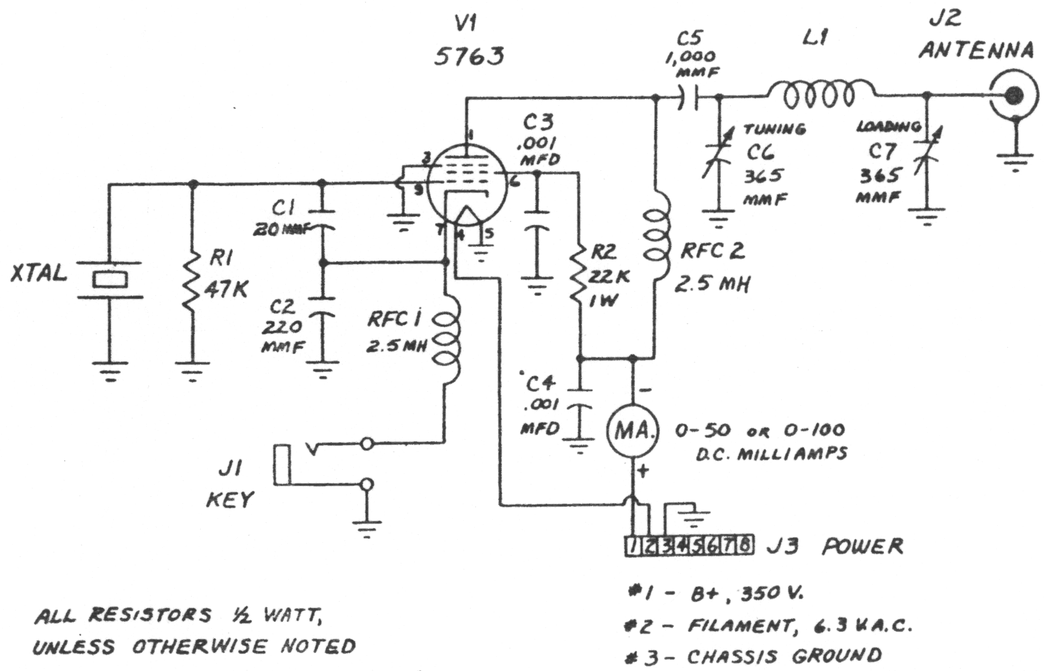

Fig. 2-1. Schematic of the 40-80 meter, crystal-controlled novice transmitter.

of this chapter. V1 is a beam-power pentode; it operates in a Colpitts-oscillator configuration. The Colpitts oscillator was picked for several reasons. It will oscillate over a wide frequency range by simply changing crystals and tuning the output circuit. The current flowing through the crystal is very low; therefore crystal damage due to excessive current is prevented. The Colpitts oscillator will operate on the crystal fundamental frequency without frequency pulling, and its output circuit can be readily tuned to the second, third, and even the fourth harmonic

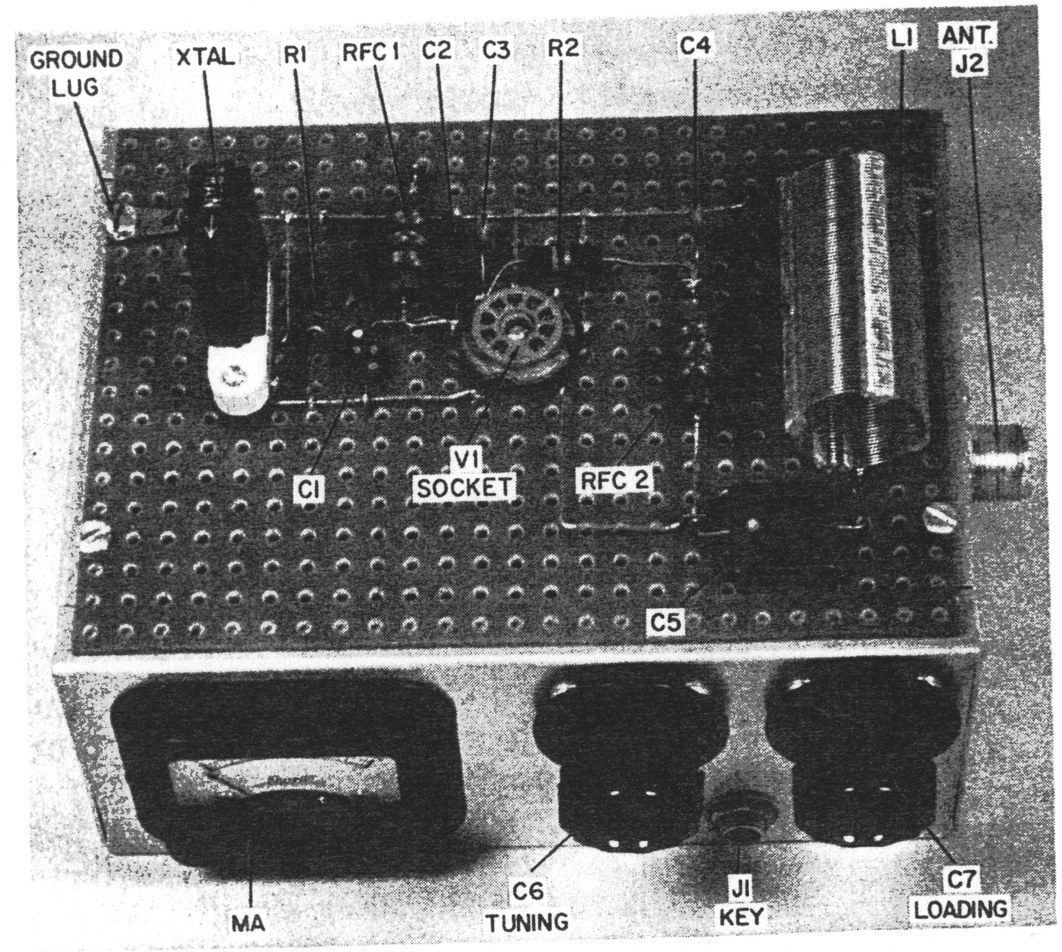

Fig. 2-2. Close-up view of the transmitter chassis.

of the crystal frequency. Harmonic operation of this circuit is the basis for the multiband transmitters described in later chapters.

The output circuit, consisting of C6, C7, and L1, is known as a pi-section tank circuit. The pi tank is a versatile impedance matching network that allows a number of antenna schemes to be used. The tank circuit will couple most efficiently into an antenna having an unbalanced 50- or 70-ohm transmission line; i.e., 50- or 70-ohm coax cable. It will, however, satisfactorily load a random length of wire.

The transmitter is operated in the c-w mode by returning the cathode of the tube to ground through the telegraph key, which plugs into J1. Thus, when the key is up, the tube cannot conduct; when the key is depressed, the

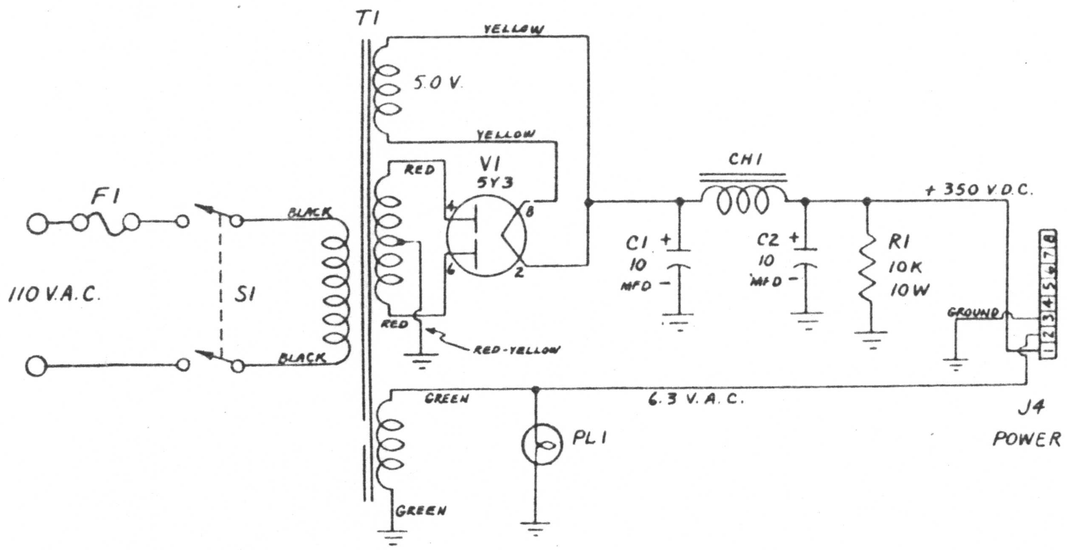

Fig. 2-3. Schematic of the power supply chassis.

tube conducts and oscillation takes place. A d-c milliammeter is used in the B+ lead to monitor the plate current. This meter is also used to tune the output circuit.

The schematic of the power supply is shown in Fig. 2-3. It is conventional in all respects: V1 is a full-wave rectifier; C1, C2, and CH1 comprise the filter circuit. R1 is a bleeder resistor; its function is to discharge the filter section when there is no load on the power supply. It also maintains a partial load on the supply, helping to keep the output voltage somewhat constant during keying of the transmitter. The power supply is fused by F1 as a safety precaution. A pilot light (PL1) is utilized in the filament line to indicate when the supply is turned on. An interconnecting cable is used to connect power-supply socket J4 to the power plug (J3) on the transmitter (Fig. 2-1).

CONSTRUCTION

The oscillator-transmitter circuit is assembled on a 5-inch by 7-inch piece of punched phenolic board (*Vectorbord*). This phenolic-board subchassis is then mounted on a standard 5″ × 7″ × 3″ aluminum chassis as shown in Fig. 2-2. The chassis, which serves now as the base for the subchassis is inverted with the bottom flange serving

as the support for the circuit board. The circuit board is fastened to the aluminum chassis with 6-32 screws.

Key jack J1, tuning capacitor C6, loading capacitor C7, antenna jack J2, power plug J3, and the d-c milliammeter are mounted on the aluminum chassis base. The hole layout drawing is given in Fig. 2-4. The mounting hole for

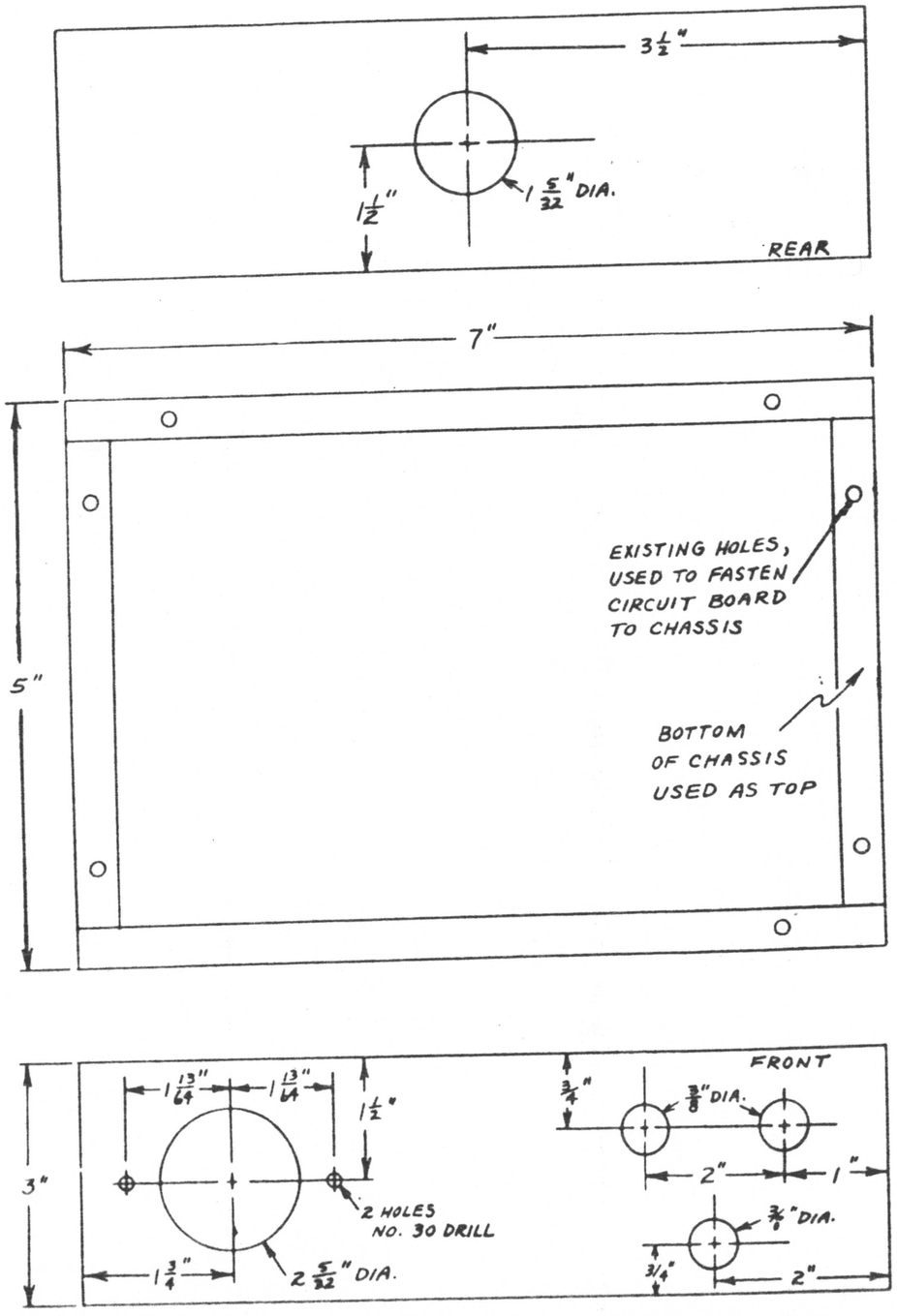

Fig. 2-4. Transmitter layout and hole-drilling guide.

antenna connector J2 is not shown in the layout drawing. A 5/8-inch diameter hole is used for mounting this connector. The hole can be located anywhere on the right-hand side of the chassis, or, if desired, it may even be mounted on the rear of the chassis. If located on the rear, it should be placed as close as possible to the end of tank coil L1.

Wire the circuit board by following the pictorial wiring diagram in Fig. 2-5, and the schematic diagram in Fig. 2-1. At the frequencies involved in this unit, lead lengths are not particularly critical; however, they should be kept as short as possible. When wiring the meter, observe the polarity indications given in Figs. 2-1 and 2-5. Meter

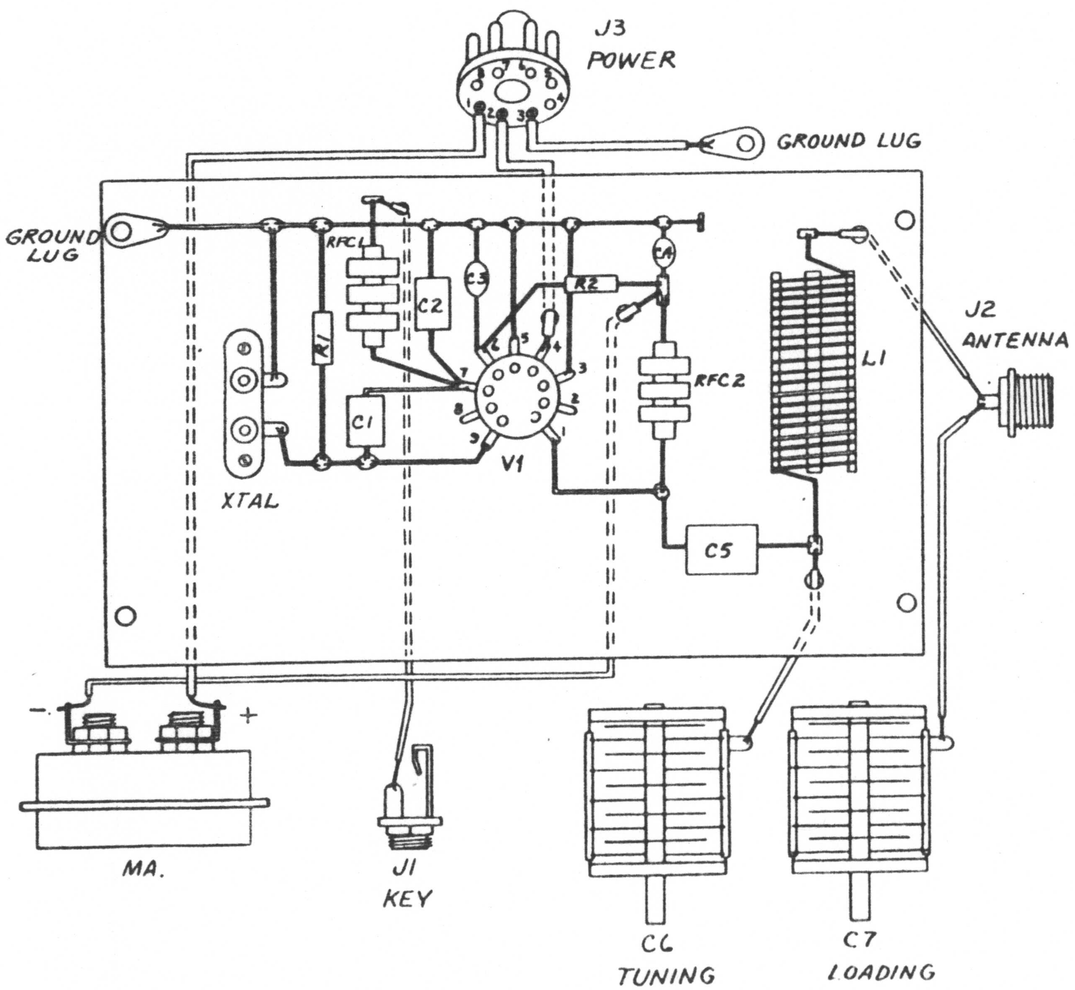

Fig. 2-5. Pictorial wiring diagram of the 40-80 meter novice transmitter.

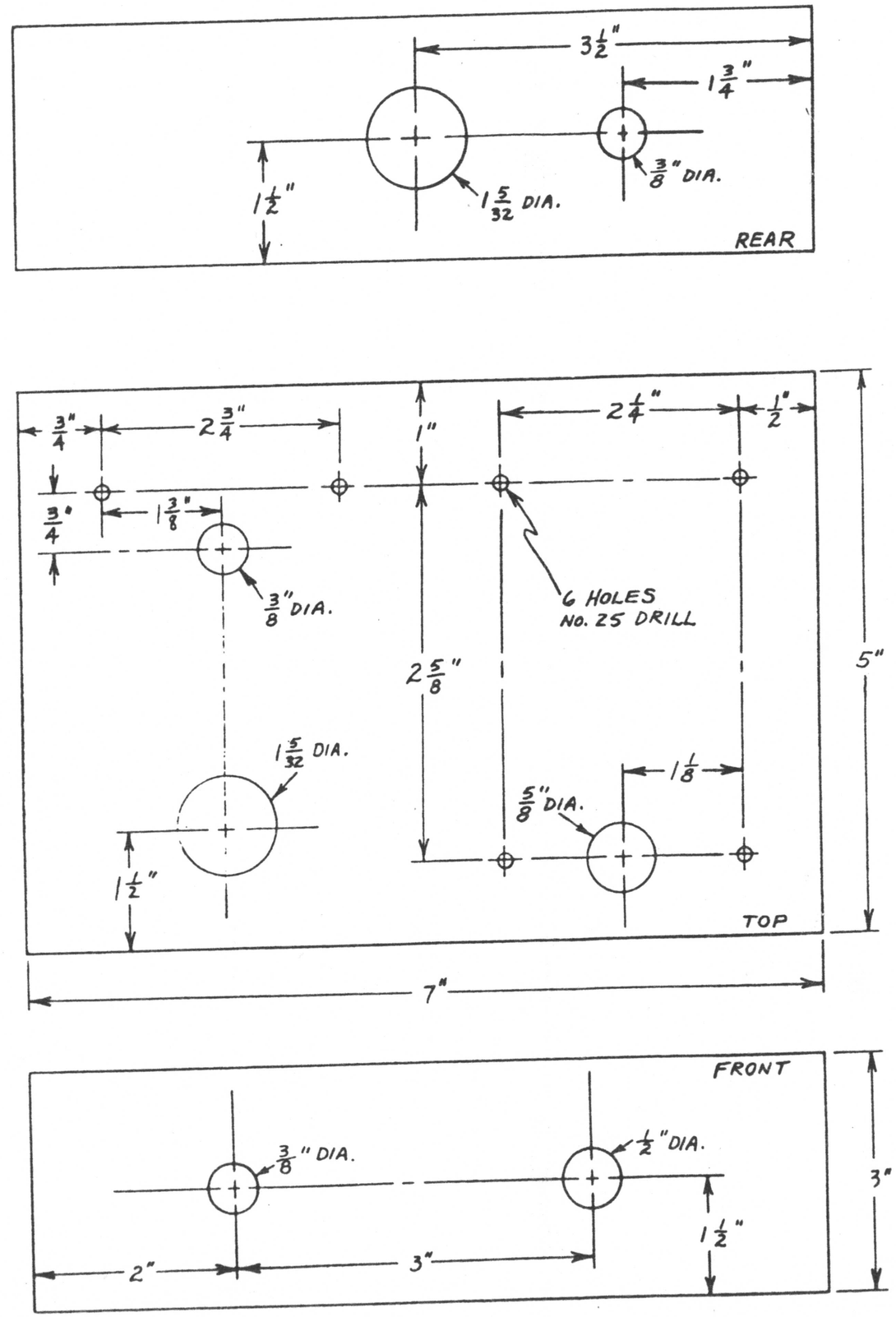

Fig. 2-6. Power supply layout and hole-drilling guide.

polarity markings will be found near the terminal studs on the rear of the meter.

Tank coil L1 is made from prewound coil stock (B & W 3016 or Air Dux 832T). The coil stock is available in 3-inch lengths. Since the 80-meter coil calls for a 2-inch length and the 40-meter coil calls for 1 inch, both can be cut from one piece of stock.

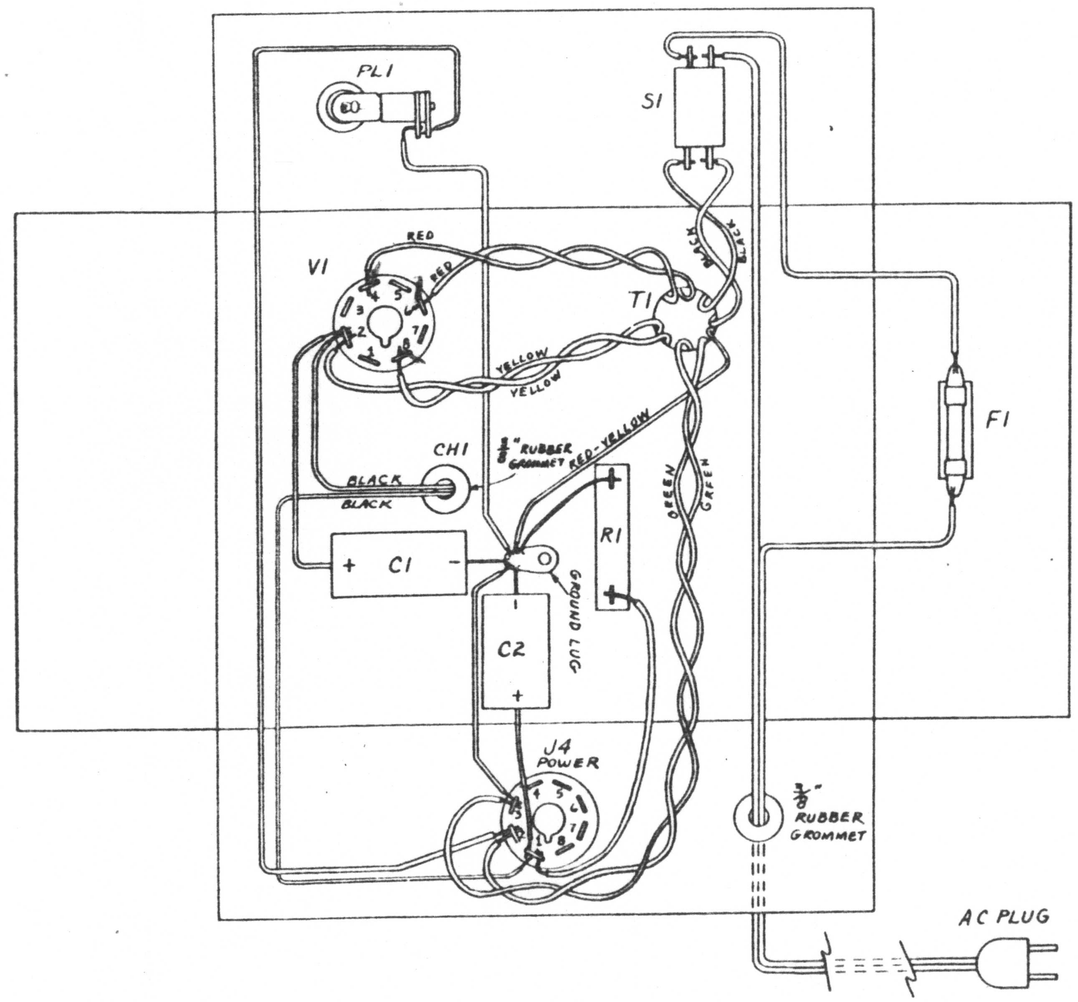

Fig. 2-7. Pictorial wiring diagram of the power supply.

A 5″ × 7″ × 3″ aluminum chassis is also used for the power supply. Hole locations for the chassis are given in Fig. 2-6 and a pictorial diagram of the chassis is given in Fig. 2-7. The a-c power cord enters through a 3/8-inch rubber grommet mounted on the rear of the chassis. It

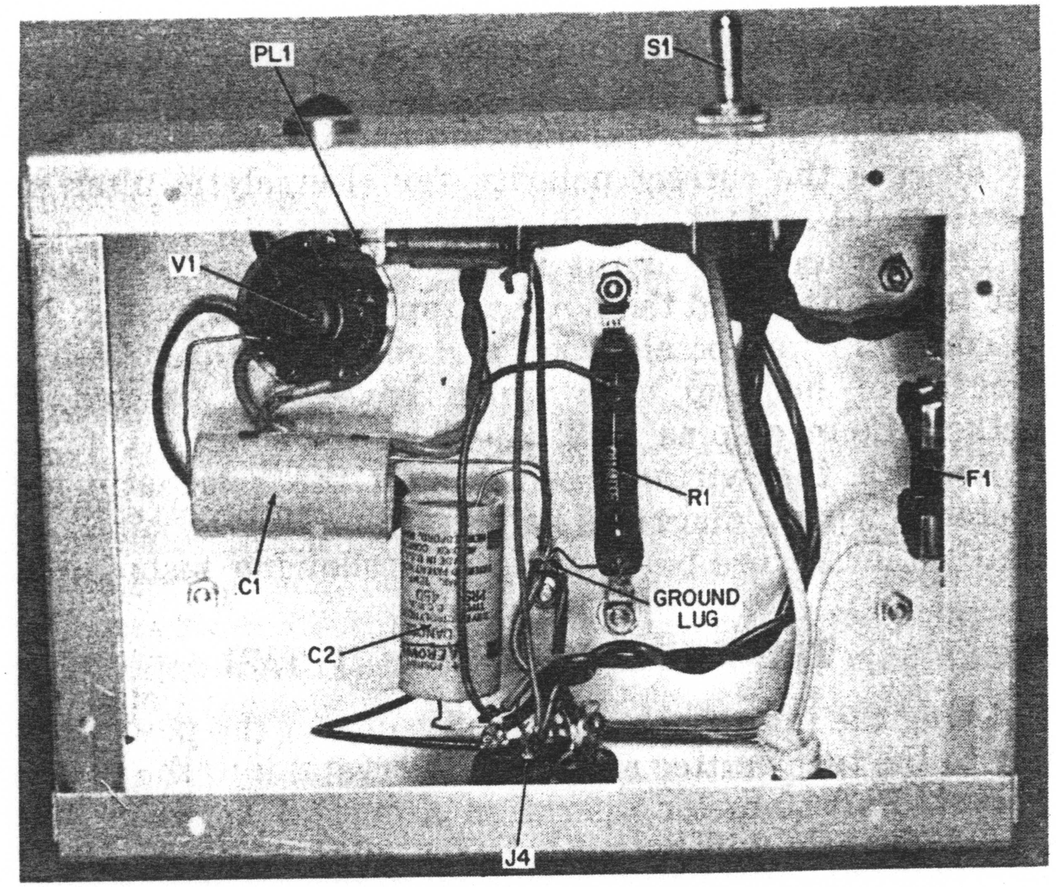

Fig. 2-8. Bottom view of the power supply chassis.

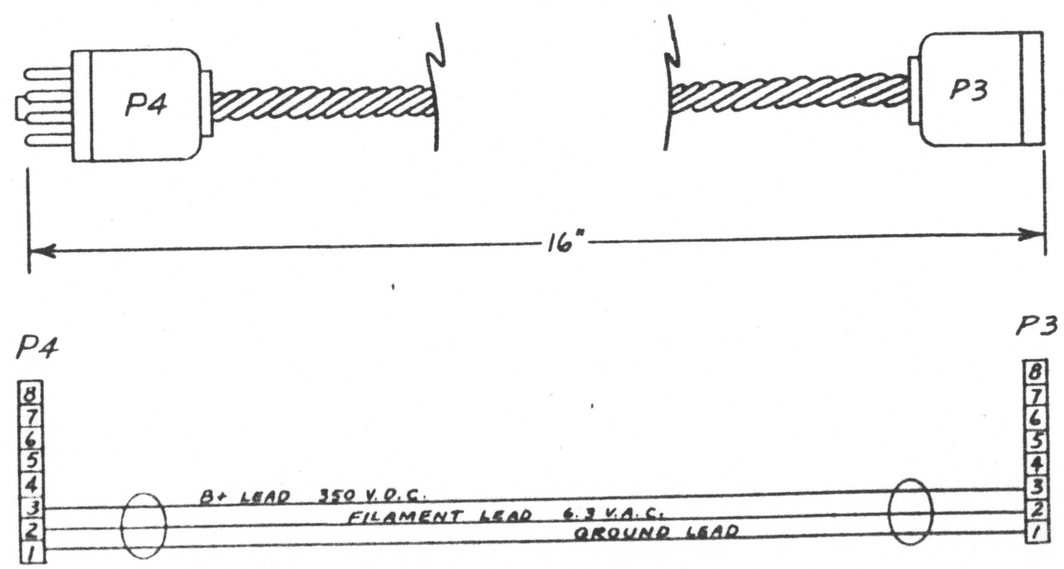

Fig. 2-9. Construction of the interconnecting cable.

should be knotted directly inside the chassis as shown in Fig. 2-8. This knot acts as a strain relief to prevent the cord from being pulled and broken at the soldered connections. The transformer leads should be twisted together as shown in the pictorial diagram and the photo. Be sure to observe the correct polarity for electrolytic filter capacitors, C1 and C2.

The construction of the interconnecting cable between the transmitter and the power supply is given in Fig. 2-9. It consists of an octal socket and plug and three 16-inch lengths of hook-up wire which have been twisted together. Connect pins 1, 2, and 3 as shown.

Recheck the wiring against both the schematic and pictorial wiring diagrams before attempting to "fire" the unit up, or before performing the following tests.

TESTING THE TRANSMITTER

Using the interconnecting cable, connect the power supply to the transmitter and insert a crystal into the crystal socket. For 80-meter operation a crystal between 3700 and 3750 kHz will be needed; for 40-meter operation a crystal between 7150 and 7200 kHz will be needed. Next, connect an ordinary light bulb (between 10 and 50 watts)

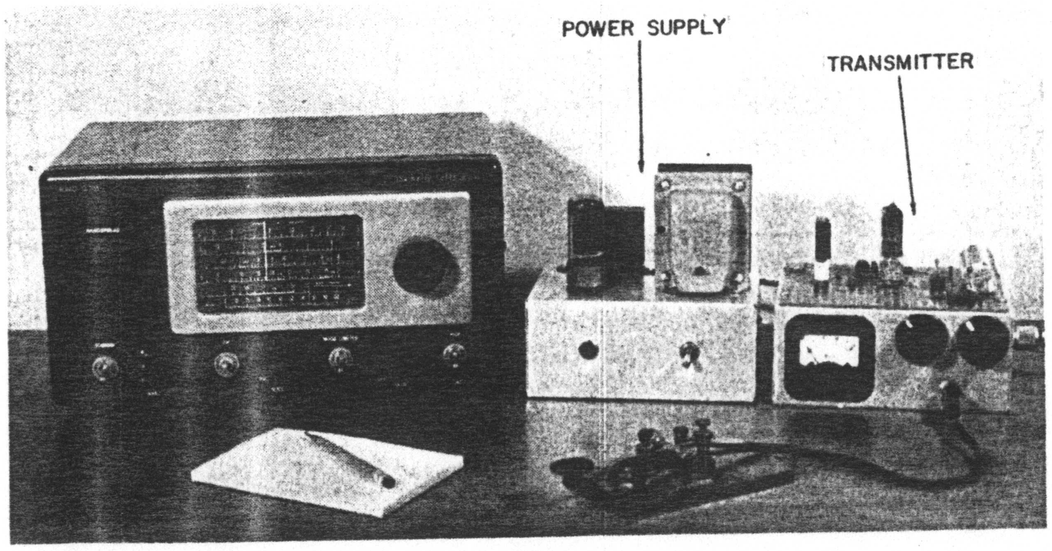

Fig. 2-10. The complete novice station.

to the antenna output jack on the transmitter (J2). This lamp bulb will serve as the "dummy" load. Solder a wire to the center terminal of the base of the light bulb, and another wire to the outer shell of the base. Connect the wire from the center terminal of the light bulb to the antenna jack and the other wire to ground (chassis). Set a receiver beside the transmitter as shown in Fig. 2-10.

Turn power switch S1 on, and allow the tubes to warm up for approximately a minute. Now close the key and tune the receiver to the transmitting frequency (crystal frequency). A signal should be heard in the receiver. Next, tune tuning capacitor C6 slowly through its range. At some point the meter should dip toward zero, and the light bulb should light. The signal heard in the receiver will also be much louder at this point. Finally, tune loading capacitor C7 through its range. At some point the light will become still brighter, and the meter reading will peak. The transmitter is now ready for "on the air" operation.

OPERATING THE TRANSMITTER

Connect an antenna to antenna jack J2. If a conventional antenna is not available, a 33-foot length of wire can be loaded up as a temporary measure. One end should be tied to an insulator and suspended from a tall tree or post; the other end should be connected to the antenna jack. This temporary antenna will operate on both 40 and 80 meters.

Use the tuning procedure outlined previously; however, this time tuning will be accomplished by watching the meter only. Tune C6 for a dip or minimum reading, and tune C7 for a peak or maximum reading. As a last step, redip C6, and the transmitter is ready for "on the air" operation.

To change bands the crystal must be changed to the desired frequency, and tank coil L1 must be changed. The 40- and 80-meter coils are soldered in and out of the circuit for band changing.

TRANSMITTER PARTS LIST

Quantity	Item No.	Description
1	C1	20-mmf, 5%, 500V, silvered-mica capacitor.
1	C2	220-mmf, 5%, 500V, silvered-mica capacitor.
2	C3, C4	.001-mfd, GMV, 1000V, disc-ceramic capacitor.
1	C5	1000-mmf, 5%, 500V, silvered-mica capacitor.
2	C6, C7	10-365-mmf, midget variable capacitor (broadcast receiver replacement type).
1	R1	47,000-ohm, ½-watt, 10%, carbon resistor.
1	R2	22,000-ohm, 1-watt, 10%, carbon resistor.
	L1	**80 meters**—64 turns of No. 24 tinned-copper wire, wound 32 turns per inch, 1-inch diameter (2-inch length of B & W 3016 or Air Dux 832T coil stock, or equiv.). **40 meters**—32 turns of No. 24 tinned-copper wire, wound 32 turns per inch. 1-inch diameter (1-inch length of B & W 3016 or Air Dux 832T coil stock, or equiv.).
2	RFC1, RFC2	2.5 millihenry r-f chokes (National R-50, Miller 4666, or equiv.).
1	Xtal	**80 meters**—3700- to 3750-kHz crystal. **40 meters**—7150- to 7200-kHz crystal.
1	V1	5763 beam-power tube.
1	J1	Microphone jack (standard phone pack).
1	J2	Coaxial chassis-mount plug SO-239 (Amphenol Type 83-1R or equiv.).
1	J3	Octal chassis-mount plug (Amphenol 86-CP8 or equiv.).
1	MA	0-50 or 0-100 d-c milliammeter (Shurite Model 950 or equiv.).
1		Crystal socket (Millen 33102 or equiv.).
1		9-pin miniature tube socket.
2		Knobs (E. F. Johnson 116-221 or equiv.).
2		Solder lugs.
1		5" × 7" piece of phenolic punched board (Vector 32AA18 or equiv.).
6		Push-in terminals for "Vectorbord" (Vector T9.4 or equiv.).

TRANSMITTER PARTS LIST—Contd.

Quantity	Item No.	Description
1		5" × 7" × 3" aluminum chassis (Bud AC-429, Cal-Chassis A-150, or equiv.). 6-32 machine screws and nuts. 4-40 machine screws and nuts. Hook-up wire. Solder.

POWER SUPPLY PARTS LIST

Quantity	Item No.	Description
2	C1, C2	10-mfd, 450-volt d-c, electrolytic capacitor.
1	R1	10,000-ohm, 10-watt, wirewound resistor.
1	CH1	Filter choke, 9 henrys @ 125 ma (Triad C-10X, Stancor C-2704, or equiv.).
1	T1	Power transformer—Secondaries: 350-0-350 VAC @ 125 ma; 5VAC @ 3A; 6.3 VAC @ 4.5A (Triad R-14A, Stancor P-8176, Merit P-3153, or equiv.).
1	S1	Dpst toggle switch.
1	F1	2-amp, Type 3AG fuse.
1	PL1	6.3-volt pilot lamp (No. 47).
1	V1	5Y3GT rectifier tube.
1	J4	Octal socket (Amphenol 78-S8 or equiv.).
1		5" × 7" × 3" aluminum chassis (Bud AC-429, Cal-Chassis A-150, or equiv.).
1		Solder lug.
2		⅜" rubber grommets.
1		Fuse mounting (Buss Type 4405 or equiv.).
1		Pilot light assembly (E. F. Johnson 147-306-2 or equiv.).
1		Octal tube socket (Amphenol 78-S8 or equiv.).
1		A-c power cord (length as required).
1		A-c power plug.
		6-32 machine screws and nuts.
		4-40 machine screws and nuts.
		Hook-up wire.
		Solder.

INTERCONNECTING CABLE PARTS LIST

Quantity	Item No.	Description
1	P3	Octal connector socket (Amphenol 78-PF8 or equiv.).
1	P4	Octal connector plug (Amphenol 86-PM8 or equiv.).
3		16-inch lengths of hook-up wire (twisted together to form cable assembly).

30-WATT NOVICE TRANSMITTER FOR 80, 40, AND 15 METERS

This unit is ideal for the novice who wants a transmitter for all three of the lower-frequency bands he is allowed to operate on (80, 40, and 15 meters). It is easy to build and operate and is low in cost. The rig runs approximately 30 watts of power. Band changing is accomplished by simply switching oscillator coils and plugging different tank coils in the output power amplifier. The power supply described in Chapter 2 is also used with this transmitter; for those who built the transmitter in Chapter 2, the oscillator tube and most of the associated components can be reused in this rig.

CIRCUIT DESCRIPTION

The schematic of the 30-watt transmitter is given in Fig. 3-1, and a photo of the completed unit is given in Fig. 3-2. Two tubes are used: V1 is a 5763 beam-power tube operating in a Colpitts oscillator configuration, and V2 is a 6L6 beam-power tube operating as a class-C power amplifier. The Colpitts oscillator (V1) is quite similar to the one described in Chapter 2. The only difference is in the plate circuit. A pi-section tank circuit was used in Chapter 2; however, conventional parallel-resonant tank circuits are used in this circuit. One tuned circuit is used for each band: L1-C4 for 15 meters, L2-C5 for 40 meters, and

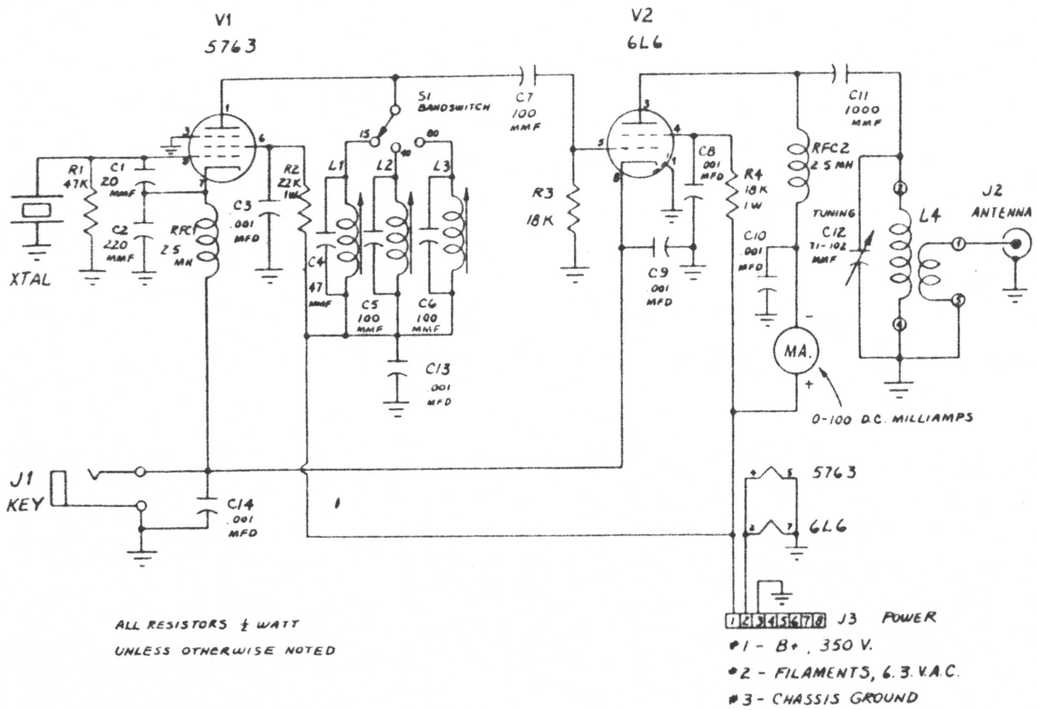

Fig. 3-1. Schematic of the 30-watt, 3-band novice transmitter for 80, 40, and 15 meters.

L3-C6 for 80 meters. The plate of the 5763 is series-fed; that is, the B+ is fed directly through the coil to the plate. Single-pole, three-position rotary switch S1 is the bandswitch that connects the plate of V1 to the proper coil for the desired operating frequency.

The signal from the oscillator is amplified by V2, which delivers approximately 30 watts of r-f power to the transmitting antenna. The plate of the 6L6 is shunt fed; that is, the B+ is fed to the plate through an r-f choke (RFC2), and the r-f energy is coupled via C11 to the parallel-resonant tank circuit (L4-C12). L4 is a prewound tank coil which is mounted on a five-pin plug, along with a multiturn link coil, which couples the r-f energy to the antenna. Three coil assemblies are used—one for each band. A d-c milliammeter is used to monitor the V2 plate current and to tune the output tank circuit. The filaments of V1 and V2 are paralleled for 6-volt operation; power for the filaments is taken from the 6-volt winding in the power-supply transformer.

The cathodes of both tubes are run to the key jack; thus, both the oscillator and final amplifier are keyed together. Bypass capacitor C14 helps to eliminate key clicks in the transmitted signal.

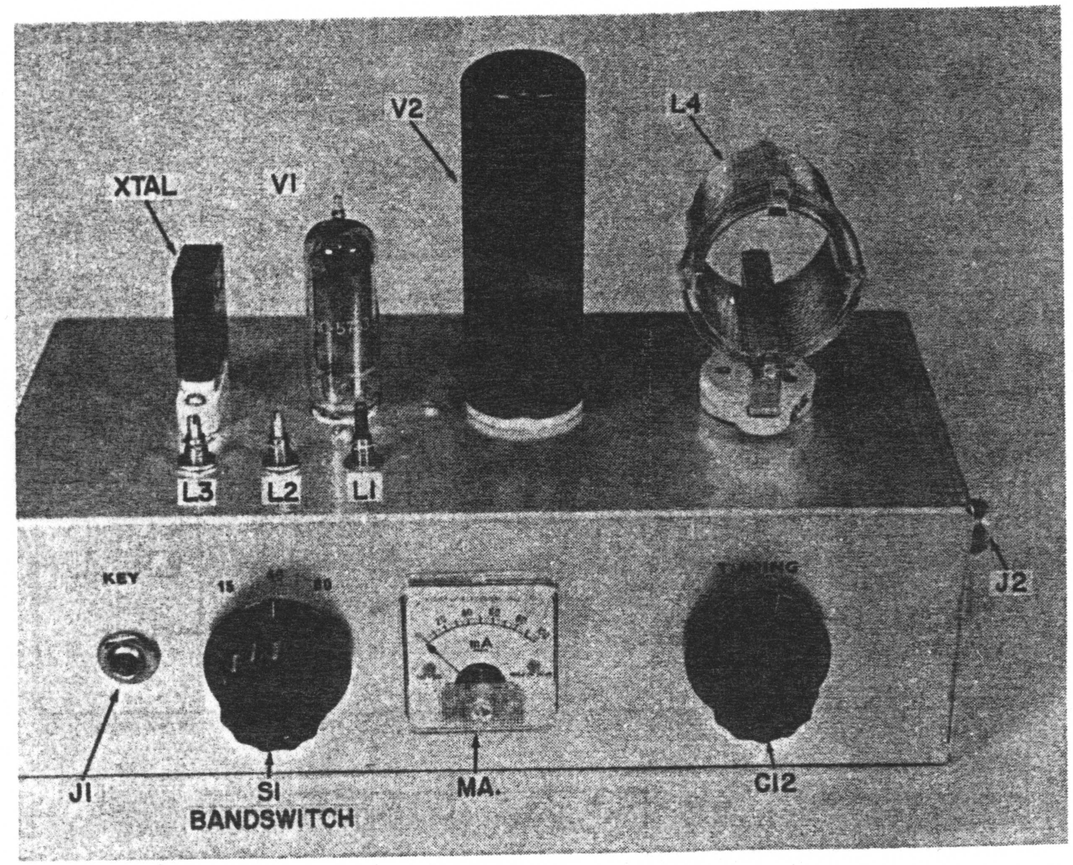

Fig. 3-2. Close-up view of the transmitter.

For 15-meter operation a crystal between 10,550 and 10,625 kHz is required. The oscillator frequency is doubled in the oscillator output circuit, since L1 and C4 are resonant in the 21-MHz region. With the crystals specified for 15-meter operation the oscillator output will be in the novice segment of that band—21.10 to 21.25 MHz. The oscillator operates "straight through" on 80 and 40 meters.

A crystal between 3700 and 3750 kHz is needed for 80-meter operation, and one between 7150 and 7200 kHz is needed for 40-meter operation.

CONSTRUCTION

The transmitter is constructed on a 5″ × 10″ × 3″ chassis. Make all the holes needed for mounting the capacitors, tube sockets, meter, etc. by following the layout shown in Fig. 3-3. Coils L1, L2, and L3 are mounted un-

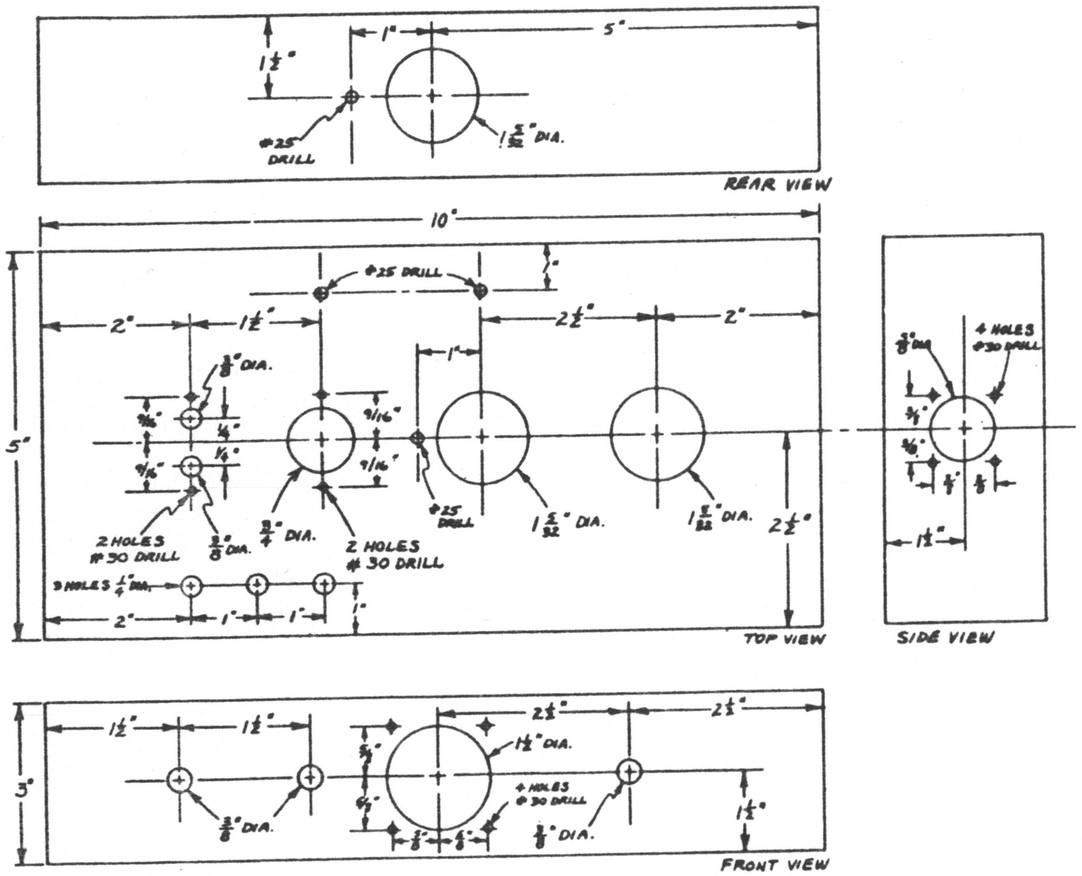

Fig. 3-3. Transmitter layout and hole-drilling guide.

der the chassis with the tuning screws sticking out of the top so that they can be conveniently tuned from the top side. Orient the coils as shown in the pictorial wiring diagram (Fig. 3-4). A detailed drawing of the coils is given in Fig. 3-5.

Orient the tube sockets, the socket for tank coil L4, and power plug J3 as shown in the pictorial diagram of Fig. 3-4. Use the numbers stamped on the bottom of the sockets and the plug as a guide. All the ground connections are made to ground lugs. Keep the leads as short as practical

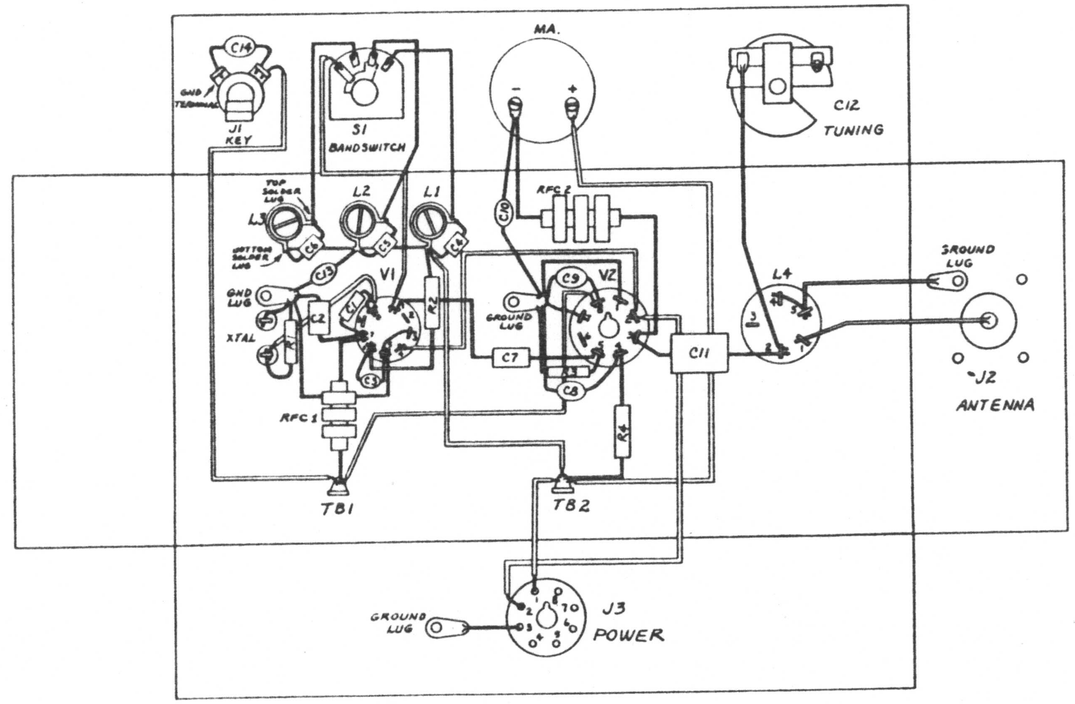

Fig. 3-4. Pictorial wiring diagram of the 3-band novice transmitter.

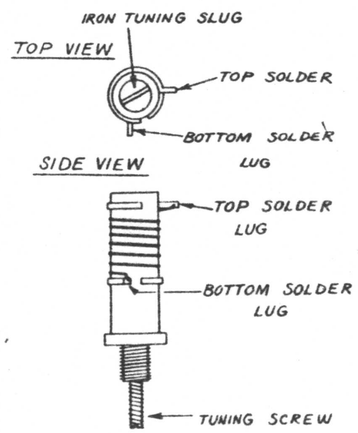

Fig. 3-5. Detailed drawing of slug-tuned coils.

when mounting the resistors and capacitors. Make sure the leads do not short to each other or to the chassis. Observe the polarities indicated in Fig. 3-1 and 3-4 when connecting to the meter. No. 18 or No. 20 bare, tinned-copper wire should be used for the leads from L4 to tuning capacitor C12, antenna jack J2, and to the ground lug. Make these connections direct, from point to point, keeping them as short as possible. A photo of the underside of the chassis is given in Fig. 3-6.

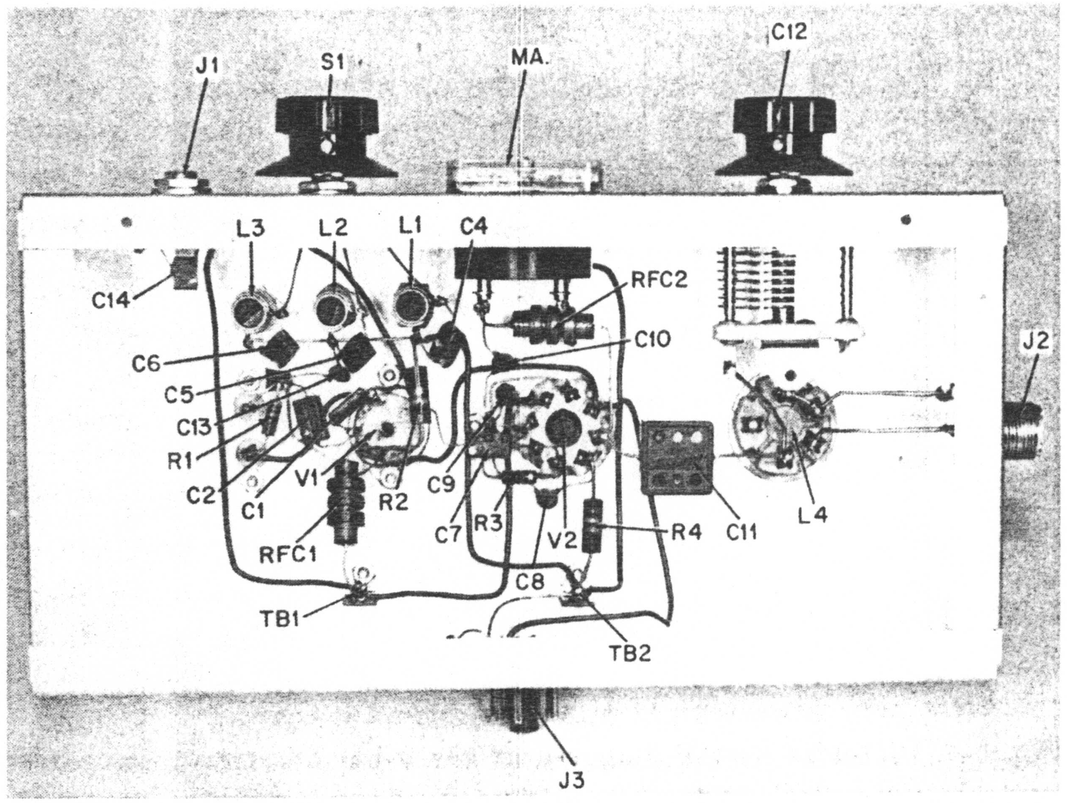

Fig. 3-6. Bottom view of the transmitter chassis.

The slug-tuned coils (L1, L2, and L3) are available prewound; however, if you want to wind them yourself, the specifications for the 15- and 40-meter ones are listed in the parts list at the end of this chapter. The 80-meter coil requires considerable inductance and is wound in a special manner to achieve a reasonable value of *Q* at the operating frequency; therefore, home construction of this coil should not be attempted. This coil is lattice, or "pie," wound, with very fine Litz wire.

TUNING

A typical station setup is shown in Fig. 3-7. Use the power supply and the interconnecting cable described in Chapter 2 (or their equivalent) with this transmitter. This power supply delivers the needed voltage and has an adequate current capacity for the transmitter in this chapter.

Turn the power switch on, and allow the tubes to warm up for approximately a minute. Solder a length of hook-up wire to the center terminal in the base of a 50-watt light bulb, and hook this lead to antenna jack J2. Solder a second length of hook-up wire to the outer shell of the light-bulb base and hook this to transmitter ground (chassis). Plug an 80-meter crystal into the crystal socket and insert the 80-meter tank coil into its socket. Set the bandswitch to the 80-meter position. Close the key, and tune tuning capacitor C12 for a dip or minimum reading on the meter.

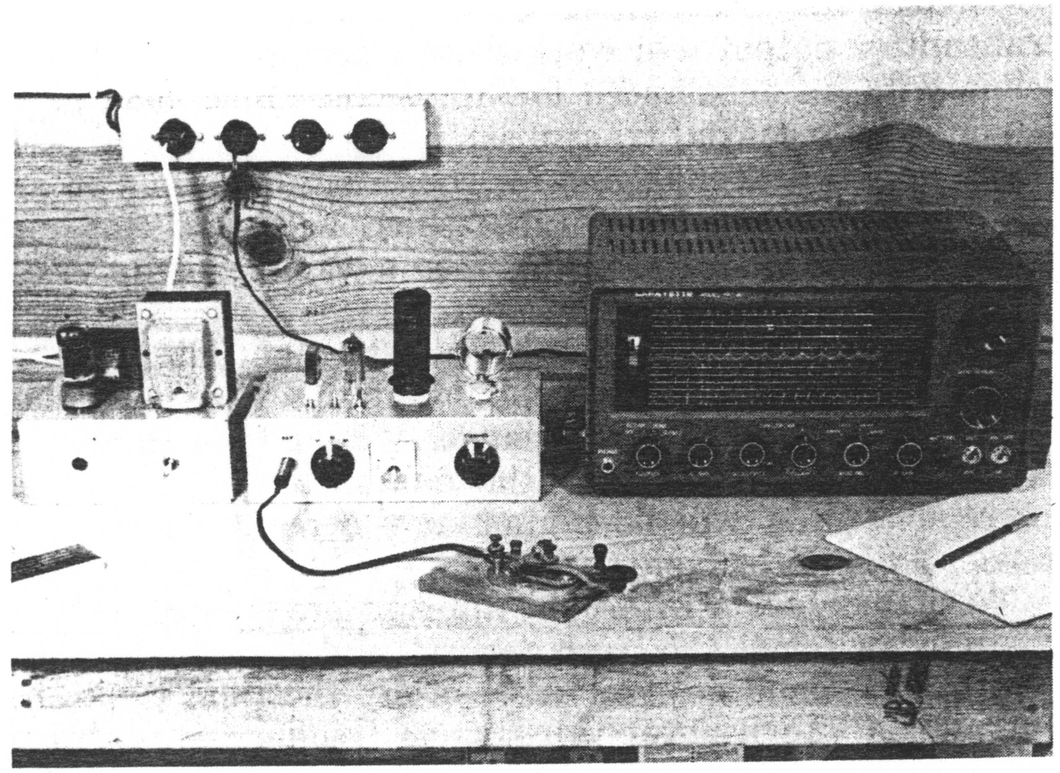

Fig. 3-7. Typical station setup.

Then adjust the 80-meter oscillator coil (L3) for a maximum indication on the meter. When the meter dips. the lamp should light up to about half its normal brilliance. The light should glow a little brighter when L3 is peaked to the operating frequency. Once L3 has been peaked, it does not have to be touched again. The only adjustment that has to be made is retuning C12 for a dip on the meter whenever the crystal frequency is changed. The slug-

tuned coils are broad band; therefore, they do not require retuning within the band.

Repeat the foregoing procedure for the 40- and 15-meter bands, adjusting C13 for a dip and peaking L2 (40 meter) and L1 (15 meters). If a grid-dip meter is available, the slug-tuned coils can be set to the approximate operating frequency before this procedure is started.

OPERATION

Connect the transmitter to a suitable antenna. The transmitter output will work most efficiently into an antenna with an unbalanced low-impedance line, such as a 50- or 72-ohm coaxial transmission line. Refer to Chapter 4 for suitable antennas, and for construction details on an all-band balun matching unit, which will give this rig added versatility for working into a variety of antenna types.

Without any load on the transmitter output (no antenna connected) the meter should dip to a very low value when C12 is tuned to resonance. When the antenna is connected, it should "load" the final; that is, the meter current reading will be higher at the point where C12 causes a dip in the meter reading.

To change bands, insert the appropriate crystal, change the bandswitch to the band desired, and plug in the tank coil for the band desired. Always dip the final tank circuit with C12 whenever you change frequencies within a band, or when you change bands.

PARTS LIST

Quantity	Item No.	Description
1	C1	20-mmf, 5%, 500V, silvered-mica capacitor.
1	C2	220-mmf, 5%, 500V, silvered-mica capacitor.
6	C3, C8, C9 C10, C13, C14	.001-mfd, GMV, 1000V, disc-ceramic capacitor.
1	C4	47-mmf, 5%, 500V, silvered-mica capacitor.
3	C5, C6, C7	100-mmf, 5%, 500V, silvered-mica capacitor.
1	C11	1000-mmf, 5%, 500V, silvered-mica capacitor.

PARTS LIST—Cont'd

Quantity	Item No.	Description
1	C12	7.1 to 102-mmf variable capacitor (E. F. Johnson 149-5 or equiv.).
1	R1	47,000-ohm, ½-watt, 10%, carbon resistor.
1	R2	22,000-ohm, 1-watt, 10%, carbon resistor.
1	R3	18,000-ohm, ½-watt, 10%, carbon resistor.
1	R4	18,000-ohm, 1-watt, 10%, carbon resistor.
1	L1	**15 meter**—0.9 to 1.6 μH coil. (Miller 4403 or equiv., or 9¼ turns No. 28 enameled copper wire closewound on ⅜" diameter powdered-iron slug coil form).
1	L2	**40 meters**—3.1 to 6.8 μH coil (Miller 4405 or equiv., or 18¼ turns No. 28 enameled copper wire closewound on ⅜" diameter powdered-iron slug coil form).
1	L3	**80 meters**—14.8 to 31 μH coil (Miller 4407 or equiv.).
3	L4	Tank coils with end links: 15 meters (B & W Type JEL, No. 3102 or equiv.). 40 meters (B & W Type JEL, No. 3104 or equiv.). 80 meters (B & W Type JEL, No. 3105 or equiv.).
2	RFC1, RFC2	2.5 mH r-f choke (National R-50, Miller 4666 or equiv.).
1	S1	1-pole, 3-position rotary switch (Centralab 1461 or equiv.).
3	Xtal	**15 meters**—10.55- to 10.625-MHz crystal. **40 meters**—7.150- to 7.200-MHz crystal. **80 meters**—3.700- to 3.750-MHz crystal.
1	V1	5763 beam-power tube.
1	V2	6L6 beam-power output tube.
1	J1	Standard phone jack.
1	J2	Coaxial chassis receptacle SO-239 (Amphenol 83-1R or equiv.).
1	J3	Octal chassis-mount plug (Amphenol 86-CP8 or equiv.).
1	MA	0-100 d-c miniature milliammeter (Lafayette TM-403 or equiv.).
2	TB1, TB2	1-lug terminal strips (Cinch-Jones Type 51 or equiv.).
1		Crystal socket (Millen 33102 or equiv.).
1		9-pin miniature ceramic tube socket (Millen 33409 or equiv.).
1		Octal ceramic tube socket (Amphenol 49-SS8 or equiv.).

PARTS LIST—Cont'd.

Quantity	Item No.	Description
1		5-pin ceramic tube socket (Amphenol 49-SS5 or equiv.).
2		Knobs (E. F. Johnson 116-221 or equiv.).
4		Solder lugs.
1		5" × 10" × 3" aluminum chassis (Bud AC-404, Cal-Chassis A-103, or equiv.).
		4-40 machine screws and nuts.
		6-32 machine screws and nuts.
		Hook-up wire.
		Solder.

H × W × D
7" × 10 × 5

CHAPTER 4

BALUN ANTENNA-MATCHING UNIT

The center-fed, half-wave dipole is probably the most popular low-frequency amateur antenna. A good deal of its popularity stems from the fact that a dipole is a basic antenna which is simple to construct and easy to install. Even more, it is easy on the pocketbook! Properly tuned, this antenna makes a very efficient radiator for r-f energy.

The center-fed dipole is inherently a balanced antenna. The transmission (feed) line is tied in at the center of the antenna; thus, both halves of the antenna are symmetrical with respect to the transmission line. In order to maintain this symmetry, particularly with respect to earth ground, this type of antenna must be fed with a balanced transmission line.

Running a balanced transmission line to a balanced antenna keeps unbalanced currents from appearing on the line. Unbalanced currents in a transmission line give rise to undesired radiation from the line. This radiation is in addition to the desired radiation from the antenna proper.

Most of today's transmitters, such as the units described in this book, and most commercially available rigs run single-ended outputs; that is, one side of the output circuit is grounded. Thus, the transmitter output is unbalanced. Grounding one side of the output circuit in a transmitter is usually desirable because it reduces radiations which might cause TVI (television interference). Some means, then, must be provided to couple the un-

balanced transmitter output to the balanced transmission line of the balanced antenna. One method of doing this is with a coil-type balun.

The balun unit described in this chapter is a wide-band device; it will work on all frequencies from 3 to 30 MHz without the need for tuning. Therefore, once it has been installed, it can be forgotten. The balun unit provides a means for coupling the unbalanced transmitter output to the balanced transmission line. Also, it acts as an impedance transformer at radio frequencies and, depending on how the coils are hooked up, will provide impedance ratios of 1 to 1, or 1 to 4. Thus, it can be used to couple a transmitter whose output impedance might nominally be 75 ohms, to an antenna having a 75-ohm transmission line, or one having a 300-ohm transmission line.

It must be kept in mind that a coil-type balun will not correct for deficiencies elsewhere in the antenna system: i.e., if the transmission line is not properly matched to the antenna. Figs. 4-1 and 4-2 illustrate typical dipole antennas.

DIPOLE ANTENNAS

The basic half-wave dipole antenna is shown in Fig. 4-1. For all practical purposes the radiation resistance at the center of a half-wave dipole is in the order of 70 ohms. A close enough match is provided by a 72-ohm, twin-lead transmission line to the center point of the antenna. The antenna "top" is made from No. 14 enameled- or bare-copper wire. Lighter or heavier wire may be used; however, No. 14 is recommended as the best compromise between weight and strength. Insulators are used on both ends of the antenna, and another one is inserted at the midpoint. The ends should be suspended as high as possible. The transmission line between the antenna and the transmitter can be as long as needed since its length is not critical.

If 72-ohm, twin-lead transmission line is not available, ordinary a-c cord (zip cord) or a simple twisted pair can

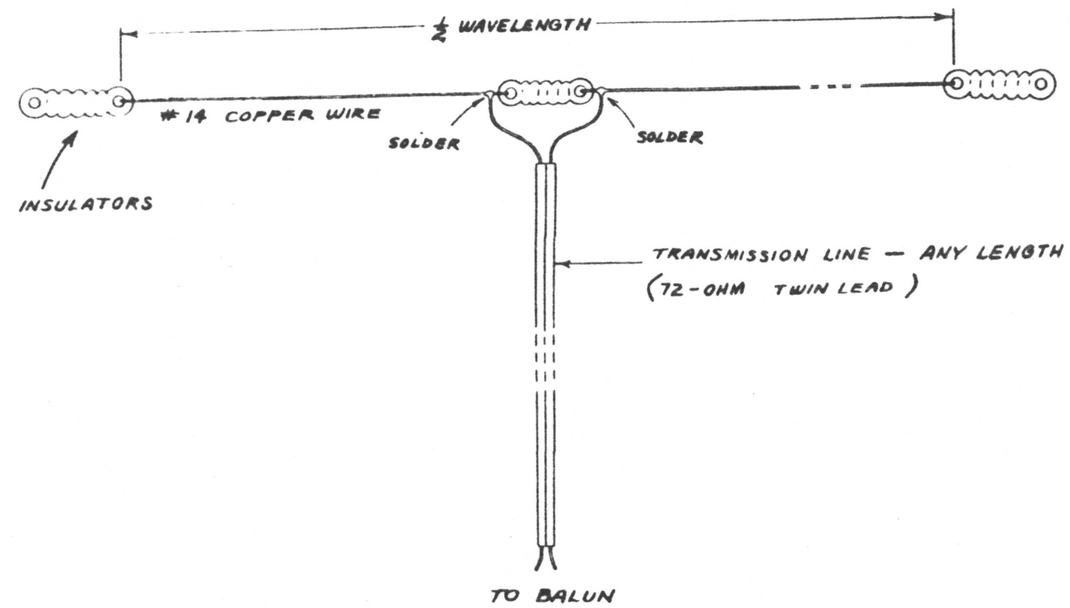

Fig. 4-1. Basic dipole antenna, fed with 72-ohm twin lead.

be used as a temporary measure. The characteristic impedances of these lines are approximately 70 ohms. When using a temporary line of this nature, operation should be restricted to low-power transmitters. Any of the transmission lines mentioned provide the balanced dipole with a balanced feed line.

The 300-ohm folded dipole makes a very efficient antenna for the lower frequency bands. Such an antenna

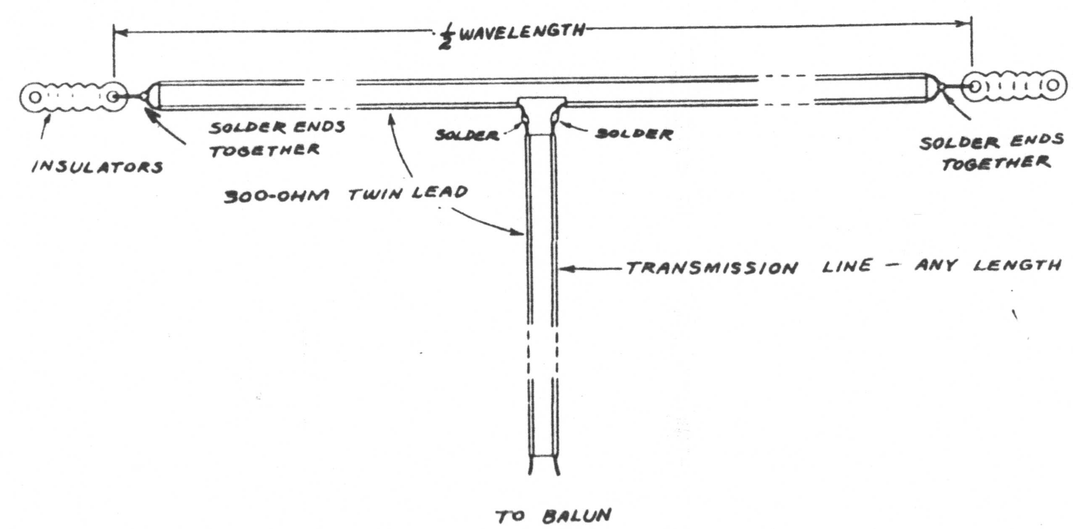

Fig. 4-2. Folded-dipole antenna constructed of 300-ohm twin lead.

(Fig. 4-2) can be constructed from the ordinary 300-ohm twin lead used extensively as the feed line for television antennas. Such an antenna is available for only pennies a foot!

Both the antenna proper and the transmission line in Fig. 4-2 are made of 300-ohm line. As before, the transmission line can be any length. The conductors at each end of the top part are soldered together and fastened to insulators. One of the conductors is broken at the center of the top section, and the resulting two ends are soldered to the conductors of the transmission line.

The one-half wavelength dimensions for both antennas (Figs. 4-1 and 4-2) are as follows:

80 meters — 136 ft.
40 meters — 66 ft.
15 meters — 22 ft.

These dimensions are approximate and represent values which fall in about the middle of each band. The actual value for a half-wave antenna for any amateur band between 10 and 80 meters can be calculated from the following equation:

$$\text{Length (feet)} = \frac{468}{\text{Freq. (MHz)}}$$

The values derived from this equation will be adequate for all practical purposes.

THE BALUN

The coil-type balun is shown schematically in Fig. 4-3. Fig. 4-3A shows the hook-up of the balun coils for coupling the unbalanced 75-ohm output of a transmitter to a 300-ohm balanced transmission line. This configuration provides an impedance transformation of 1 to 4 and will work in conjunction with the 300-ohm folded dipole in Fig. 4-2. Fig. 4-3B shows the hook-up of the balun coils

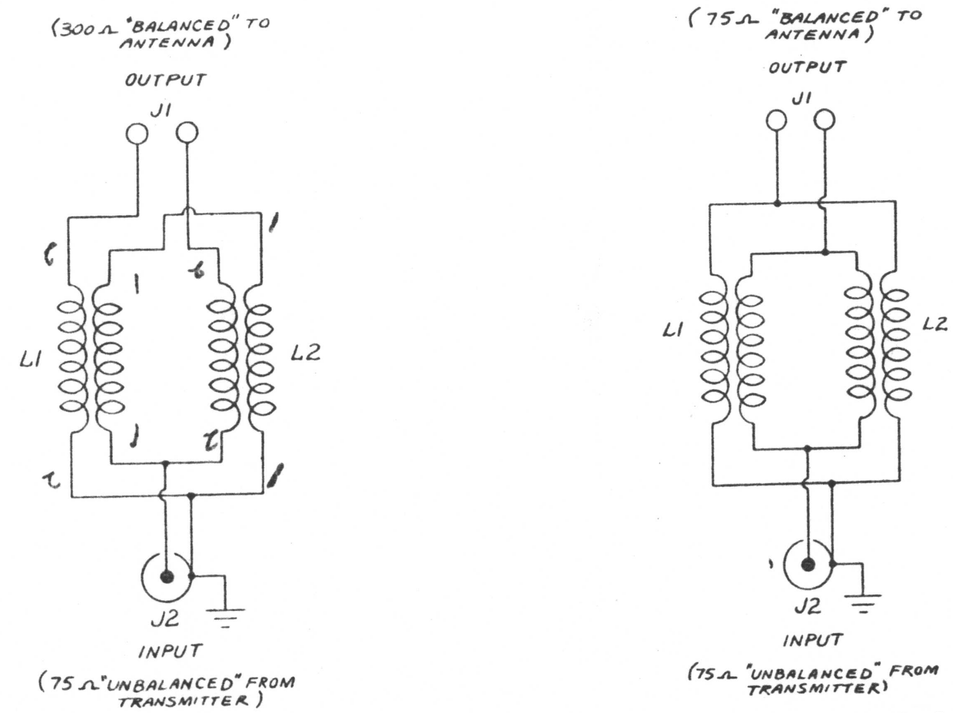

Fig. 4-3. Schematic of the two wiring configurations for the balun.

for coupling the unbalanced 75-ohm output of a transmitter to a balanced 72-ohm transmission line. This configuration is designed for the straight dipole of Fig. 4-1. In this case the balun offers an impedance transformation of 1 to 1.

The balun consists of two identical coils (L1 and L2). Each coil is actually two coils in one, wound in a bifilar fashion. A bifilar coil is made by placing two conductors side by side and simultaneously winding them into a coil while keeping the spacing between the turns constant. Thus, the completed coil has two leads at each end. Complete winding data for the balun coils is given in the parts list at the end of this chapter, if you feel brave enough to wind your own. The coils are commercially available already wound. A photo of a completed balun unit with commercial coils is shown in Fig. 4-4.

The unit shown in Fig. 4-4 was wired to operate into a 300-ohm twin-lead transmission line. The coils are mounted on a plate fabricated from a piece of sheet aluminum. The wiring is shown pictorially in Fig. 4-5, which

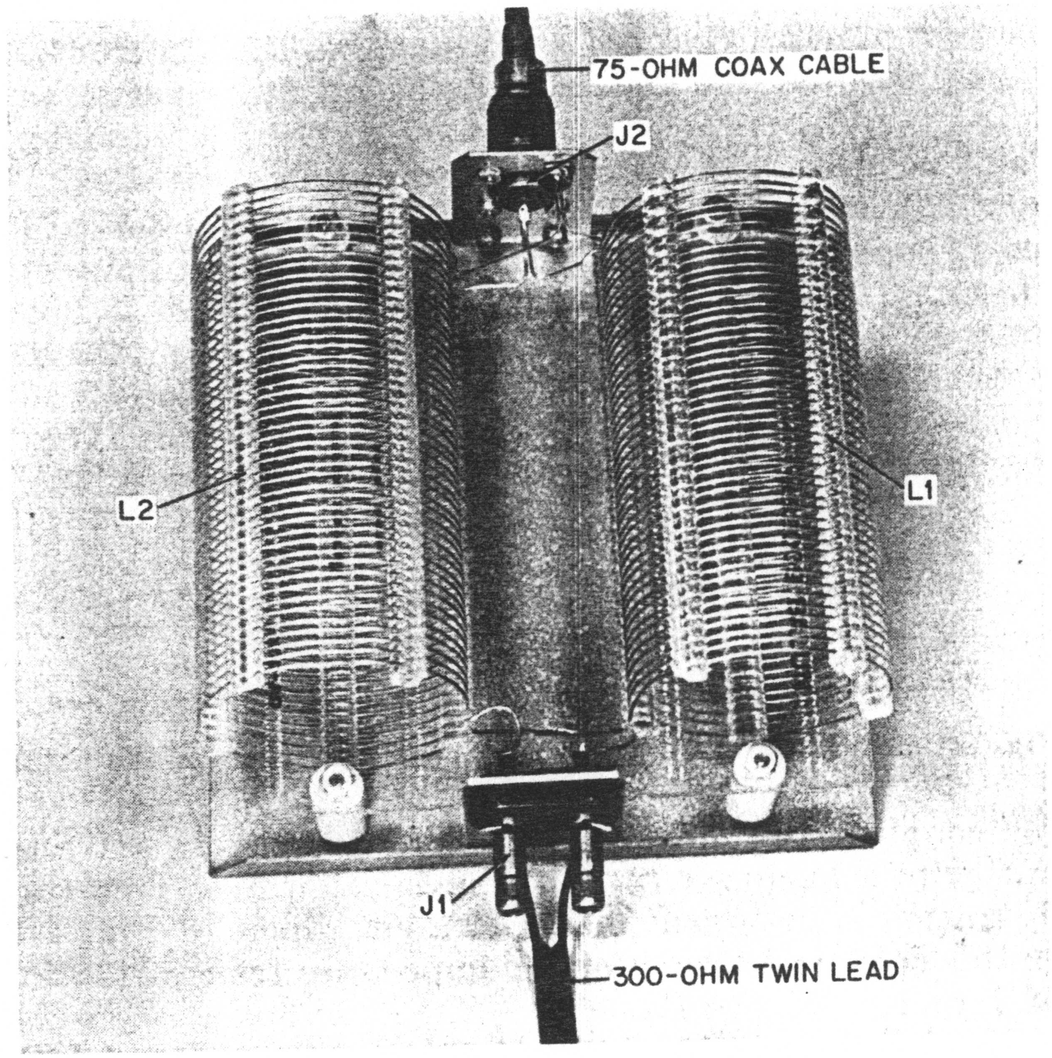

Fig. 4-4. Photo of the completed balun unit.

corresponds to the schematic diagram in Fig. 4-3A. The chassis layout is given in Fig. 4-6.

The balun unit is connected to the transmitter with a short piece of coax cable, which connects to J2. The antenna is connected to binding-post-type connector J1.

Dipole antennas are not the only antennas which can be used with the transmitters described in this book. There are many other types. The antennas described in this chapter were chosen as a convenience to the beginner, and also to point out the method for properly matching an unbalanced transmitter to a balanced antenna. The balun unit can be used with other antennas.

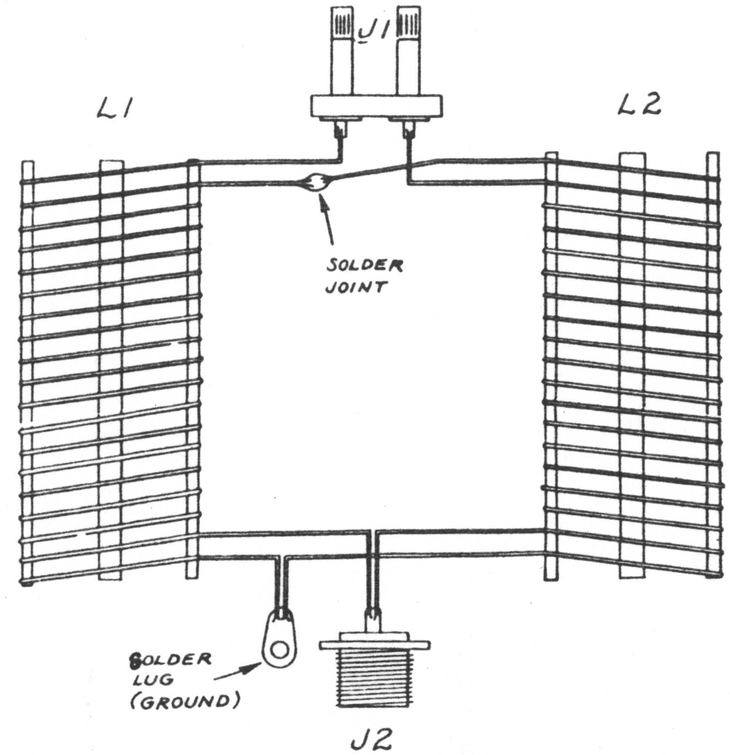

Fig. 4-5. Pictorial wiring diagram of balun unit. This unit corresponds to Fig. 4-3A.

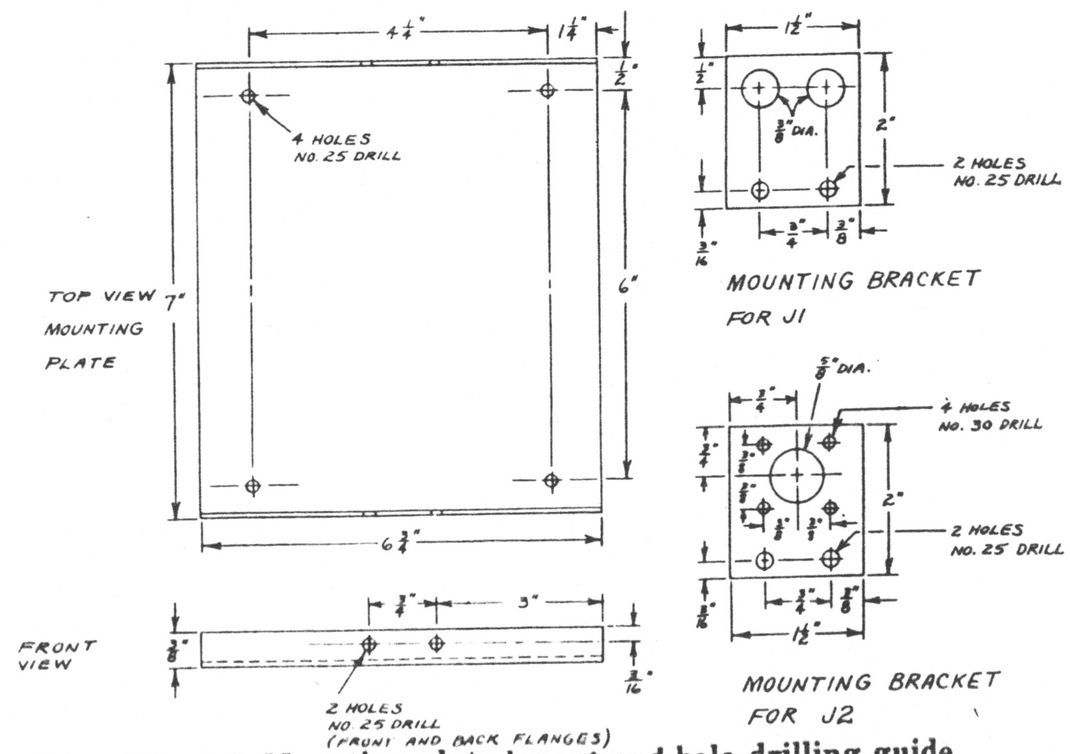

Fig. 4-6. Mounting plate layout and hole-drilling guide.

PARTS LIST

Quantity	Item No.	Description
2	L1 L2	Bifilar-wound coil (Illumitronic Engineering No. B2009 Air Dux Balun or equiv., or constructed as two separate interwound coils, 23 turns per subcoil (46 turns per coil assembly) of No. 20 tinned-copper wire, wound 2½ inches in diameter and spaced to a 5-inch length, with constant spacing between all coil turns).
1	J1	Binding post connection (National FWH or equiv.).
1	J2	Coaxial chassis receptacle SO-239 (Amphenol 83-1R or equiv.).
1		Solder lug.
1		Piece sheet aluminum for coil mount (6" × 6¾" with ⅜" lip).
2		1½" × 2" pieces of steel aluminum for J1 and J2 mounting brackets.
4		Ceramic standoff insulators.
		6-32 machine screws and nuts.
		4-40 machine screws and nuts.
		Solder.

CHAPTER 5

CRYSTAL-CONTROLLED CONVERTERS FOR 10, 15, OR 20 METERS

The crystal-controlled converter described here makes an excellent "front end" for low-frequency war surplus receivers or for some of the older communications receivers. Surplus receivers have been available at very reasonable prices for a number of years; when used in conjunction with the converter described in this chapter, the combination offers inexpensive, yet high-performance, receiving equipment for the higher frequencies. A common ailment among the older communications receivers is oscillator drift at the higher frequencies. If a crystal-controlled converter is used ahead of the receiver, it can be used as a tunable i-f circuit at the lower frequencies, where it tends to be more stable. The inherent stability of the crystal in the converter is thus utilized, thereby saving the old receiver from the "junk pile."

The self-powered converter circuit is shown in Fig. 5-1. It is completely self contained, including its own a-c power supply. This arrangement is more convenient than having to tap into the receiver or some other external power supply. To cut costs, however, the power supply can be omitted, and power can be obtained elsewhere. In either instance, the converter requires 150 d-c volts at approximately 35 milliamperes and 6.3 a-c volts at 0.625 ampere.

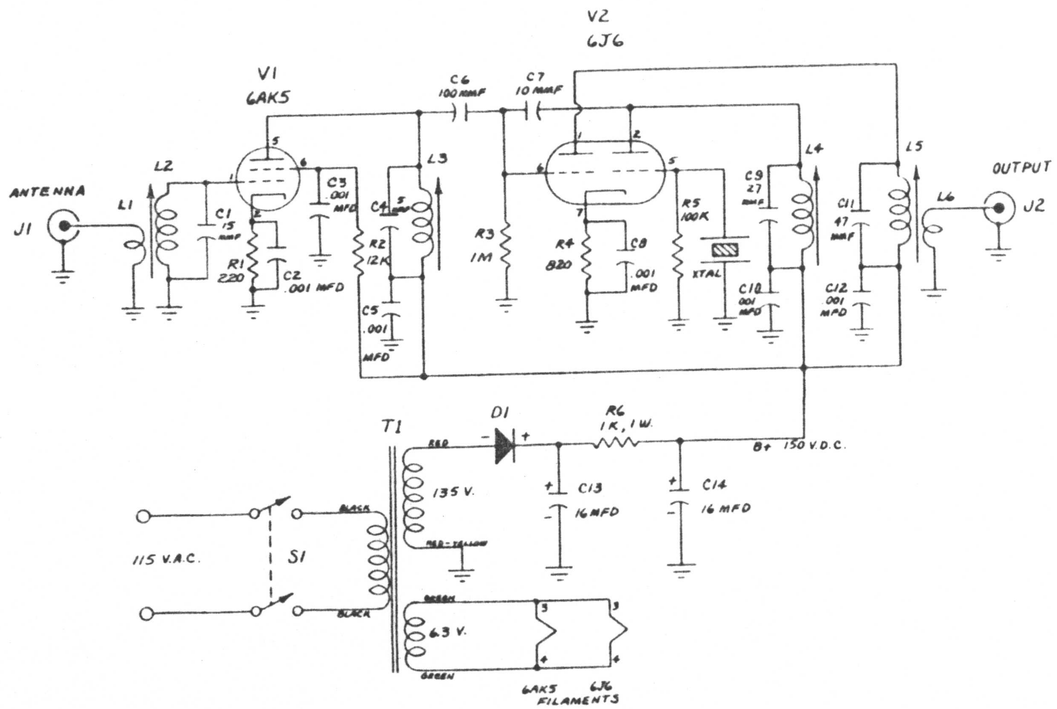

Fig. 5-1. Schematic of the converter, including built-in power supply.

This converter offers an inexpensive, yet high-quality, means for the novice to receive 15-meter c-w signals. When used along with a low-frequency receiver, the converter provides the necessary stability required for c-w reception at the higher frequencies.

CIRCUIT DESCRIPTION

V1 is a 6AK5 r-f pentode and serves as the r-f amplifier. Grid coil L2 and plate coil L3 both resonate in the received band. Both are slug-tuned coils with suitable bandpass characteristics to allow reception over the entire band without having to be retuned. The signal is coupled into grid coil L2 from the antenna by means of a two-turn link (L1) wound around the ground end of the grid coil.

One section of the 6J6 dual-triode tube serves as a crystal-controlled oscillator and the other section as the mixer. Another slug-tuned coil (L4) is tuned to the crystal frequency. The generated oscillator signal is coupled into the grid of the mixer via a 10-mmf ceramic capacitor (C7). Here the oscillator signal and the amplified incoming signal are mixed; the resulting i-f signal appears across the mixer plate coil (L5). L5 resonates at the intermediate frequency and a link (L6) couples the signal from L5 to the receiver.

INTERMEDIATE FREQUENCY

The i-f output of the converter is in the 7-MHz region. In Fig. 5-2, the converter is shown hooked up to a surplus

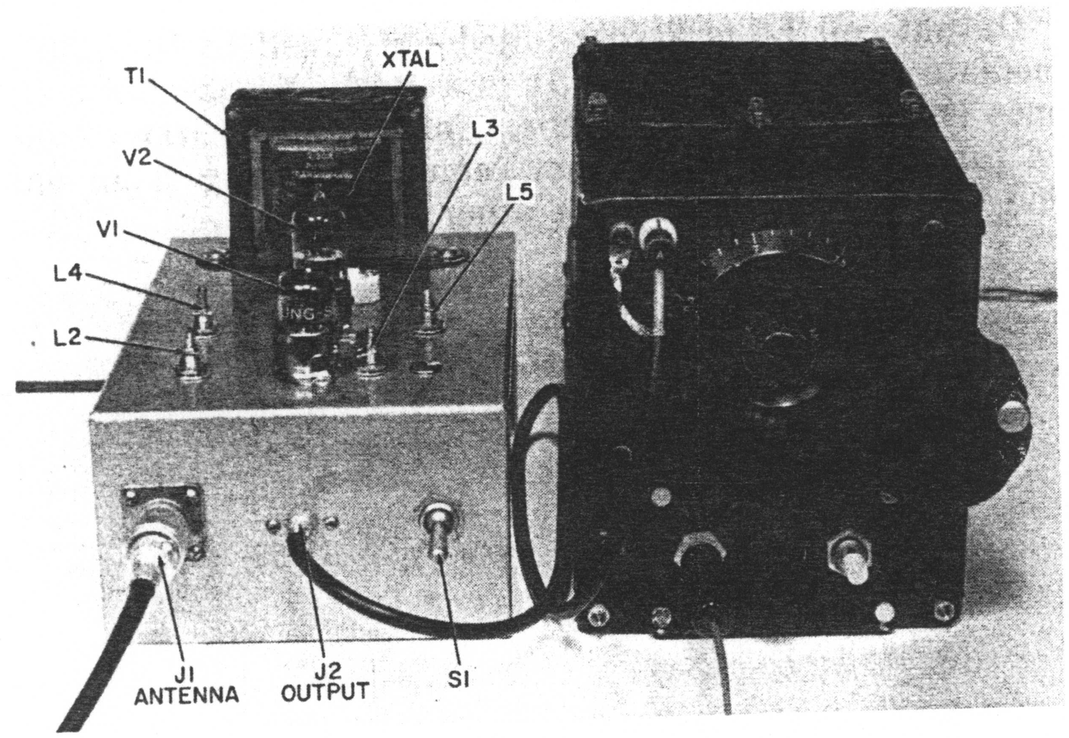

Fig. 5-2. The converter hooked up to a surplus command receiver.

"Command" receiver. This receiver is typical of the surplus receiver types available. It covers a frequency range of 6 to 9.1 MHz, and makes an excellent tunable i-f section for the converter. Of course, any receiver with coverage in the 7-MHz i-f region will do.

The intermediate frequency is the difference between the incoming signal frequency and the crystal frequency. For example, 10-meter reception requires a 21-MHz crys-

tal. A signal being received at 28 MHz in the converter appears at 7 MHz on the receiver. The upper end of the 10-meter band, which is 29.7 MHz, would appear at 8.7 MHz on the receiver (29.7 minus 21.0 = 8.7). Therefore the 10-meter band is tuned from 7.0 to 8.7 MHz on the receiver serving as the tunable i-f tuner.

For 15-meter reception a crystal frequency of 14 MHz is required. The limits of the 15-meter band are 21.0 to 21.45 MHz; therefore, the receiver is tuned from 7.0 to 7.45 MHz. The 20-meter band lies between 14.0 and 14.35 MHz, and the crystal frequency required is 7 MHz. The i-f receiver tunes from 7.0 to 7.35 MHz in this case.

Output coil L5 is a slug-tuned coil tuned to the intermediate output frequency. It is a fairly broadband coil; once it has been tuned to the approximate center of the i-f tuning range, it does not require retuning from one end of the i-f range to the other.

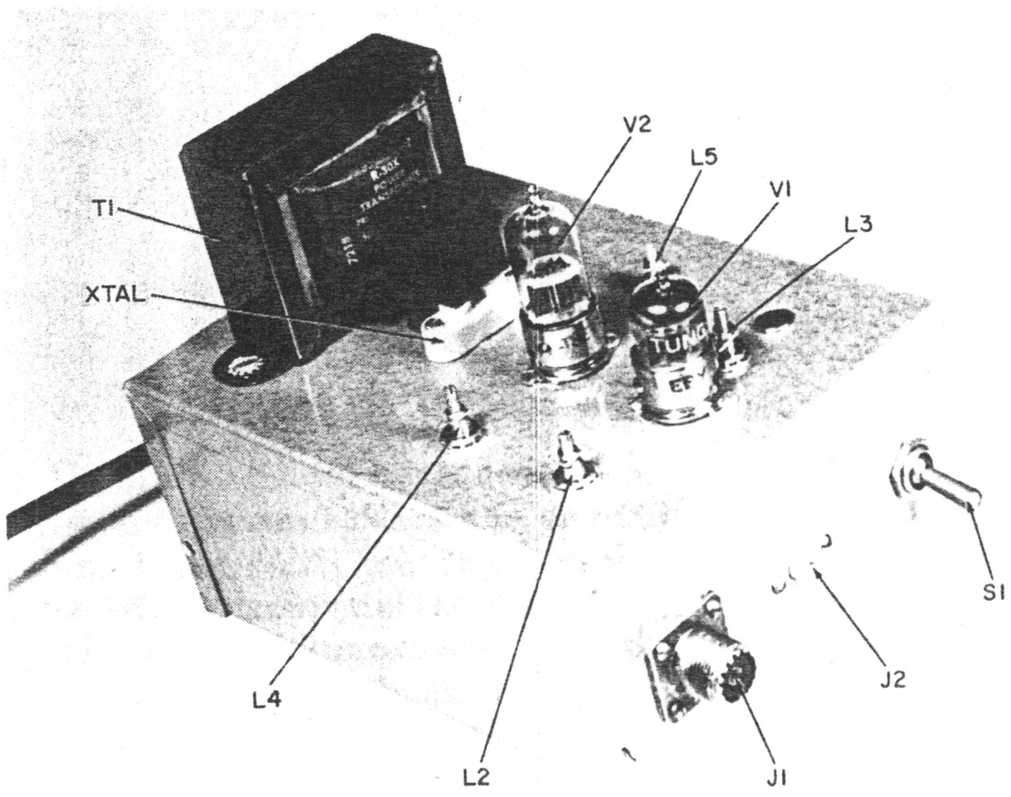

Fig. 5-3. Location of major components on converter chassis.

CONSTRUCTION

The converter is housed in a 7″ × 5″ × 3″ aluminum chassis box (Fig. 5-3). If the components given in the parts list at the end of this chapter are used, follow the hole-location drawing in Fig. 5-4 and make all the holes

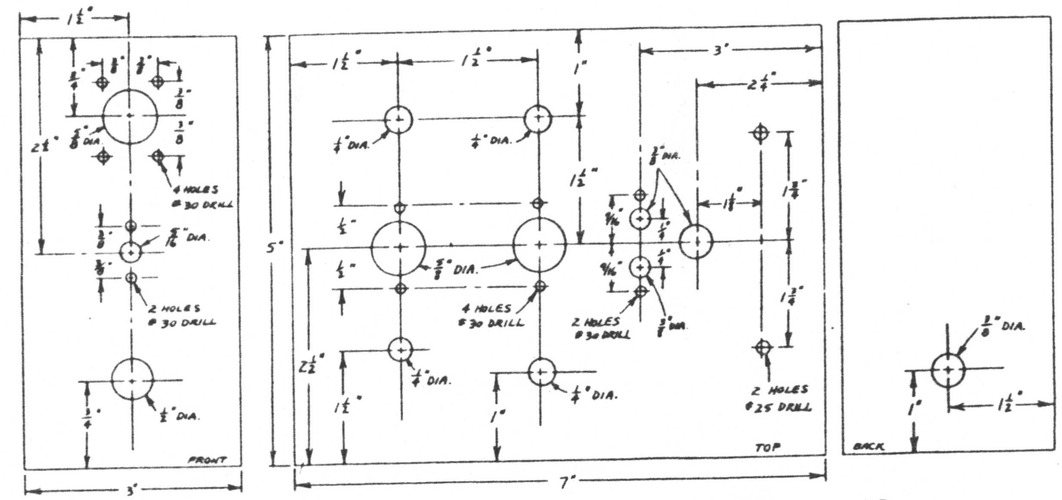

Fig. 5-4. Chassis layout and hole-drilling guide.

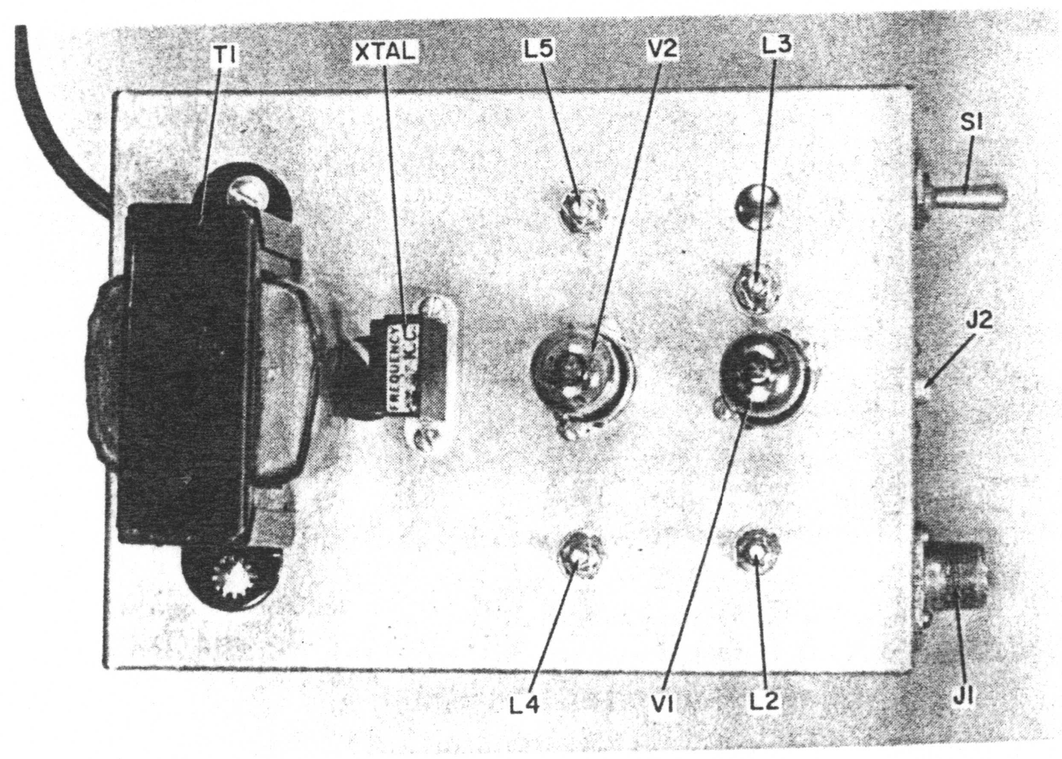

Fig. 5-5. Top view of the converter.

necessary to mount the components. After the holes have been completed, mount the major components, such as the tube sockets, slug-tuned coils, transformer, etc. A top view of the completed chassis is given in Fig. 5-5. Orient these parts as shown in the pictorial wiring diagram (Fig. 5-6). The links (L1 and L6) should be wound around their respective coils prior to installing the coil. Fig. 5-7 illustrates the method of winding the link around the coil; the end of the coil on which the link should be wound is given in the coil data found in the parts list. Coil tuning capacitors C1, C4, C9, and C11 are all silvered mica capacitors soldered directly across the coil terminals.

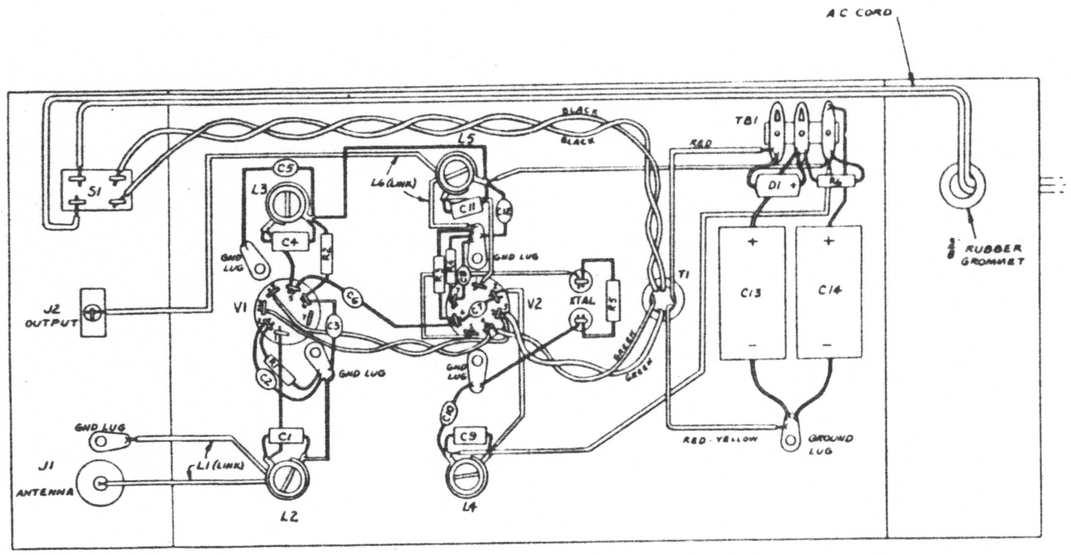

Fig. 5-6. Pictorial wiring diagram of the converter.

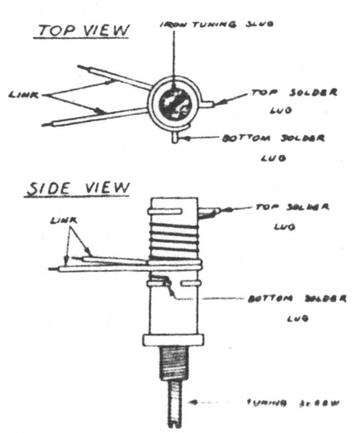

Fig. 5-7. Detailed drawing of slug-tuned coils and the added coupling link.

It might be easier to solder these across the coils before installing them.

The .001 bypass capacitors are all small disc ceramics (1/4-inch diameter); only this type should be used. They were chosen because their small size and inherently low series inductance make them ideal for r-f bypassing at high frequencies.

The unit should be wired by following both the schematic diagram (Fig. 5-1) and the pictorial wiring diagram (Fig. 5-6). A piece of zip cord (a-c power cord) should be run in through the 3/8-inch rubber grommet located on the rear panel of the chassis, knotted directly inside the box, and soldered to the power switch (S1) as

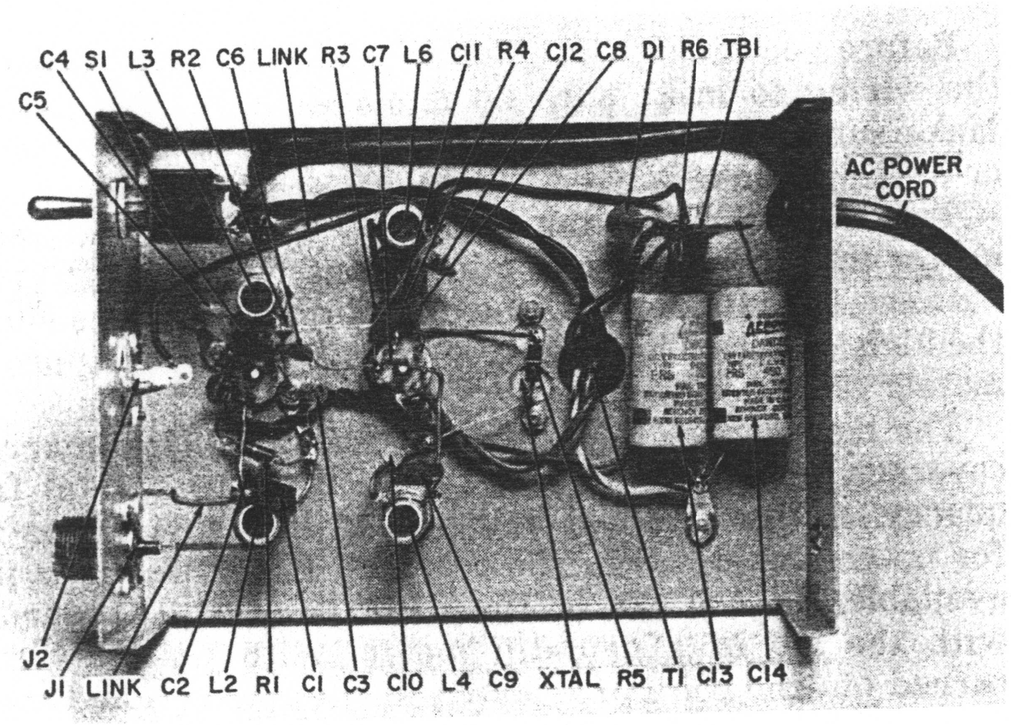

Fig. 5-8. Bottom view of chassis.

shown in Fig. 5-8. The knot serves as a "strain relief" for the power cord, preventing an accidental pull on the cord from breaking the soldered connections on the switch.

The leads from the power transformer are also run into the box through a 3/8-inch rubber grommet, located on the top of the box. Twist the two black leads together, run

them along the edge of the chassis to the power switch, and solder them. The black leads are the a-c input leads to the transformer. Also twist the green filament leads together and solder them to the respective tube-socket pins as shown in the diagrams.

When wiring the power supply, be sure to observe the polarity of the silicon rectifier (D1) and electrolytic capacitors C13 and C14. The leads of the resistors and capacitors should all be kept as short as possible. Also, when wiring the small components, avoid overheating them during the soldering operation—they can easily be damaged.

CONVERTER ALIGNMENT

Before you attempt to "fire up" the converter, recheck the wiring to make sure no mistakes have been made. Make sure that none of the leads is shorting to ground or to other leads.

Turn the power switch on and let the filaments warm up for approximately one minute. Insert a vom or vtvm between the junction of R6 and C14 and ground to check the high voltage. The measured voltage should be approximately 150 d-c volts.

The next step is to set up the oscillator. If a general-coverage receiver is available, tune it to the crystal frequency. A signal should be heard at that spot. Tune L4 for maximum signal in the receiver. If a receiver is not available, the coil can be tuned to the crystal frequency with the aid of a grid-dip meter. With the converter turned off, the coil is resonated in the conventional manner by watching for a "dip" in the grid-dip meter indication when the coil is tuned to the proper frequency. The grid-dip meter can also be used in the wave-meter mode of operation. The converter is turned on, and the signal from the oscillator is detected by the grid-dipper. L4 is then tuned for a maximum indication on the meter.

Once the oscillator has been peaked, the remainder of the converter can be aligned. The converter should now be hooked up to the receiver, which is going to serve as

the tunable i-f receiver. A short piece of shielded cable should be used from the converter to the receiver. The shielded wire will keep out signals that would normally be received at the intermediate frequency.

A signal located approximately in the middle of the band on which the converter has been wired to receive should now be run into the converter. The signal can come from a signal generator, a grid-dip meter, or from a friend across town who operates on the band which the converter receives. Of course, if using an "on-the-air" signal, an antenna should be hooked up to the converter.

Tune coils L2, L3, and L5 for a maximum signal output from the receiver. If the receiver is equipped with an S meter, the alignment will be much easier. Simply tune for a maximum indication on the meter.

Hook an antenna up to the converter, and it's ready for operation!

PARTS LIST

Quantity	Item No.	Description
1	C1	15-mmf, 5%, 500V, silvered-mica capacitor.
6	C2, C3, C5, C8, C10, C12	.001-mfd GMV, 1000V, ¼-inch dia. disc-ceramic capacitors.
1	C4	5-mmf, 5%, 500V, silvered-mica capacitor.
1	C6	100-mmf, 10%, 1000V disc-ceramic capacitor.
1	C7	10-mmf, 10%, 1000V disc-ceramic capacitor.
1	C9	27-mmf, 5%, 500V silvered-mica capacitor.
1	C11	47-mmf, 5%, 500V silvered-mica capacitor.
2	C13, C14	16-mfd, 450VDC, electrolytic capacitors.
1	R1	220-ohm, ½-watt, 10%, carbon resistor.
1	R2	12,000-ohm, ½-watt, 10%, carbon resistor.
1	R3	1-megohm, ½-watt, 10%, carbon resistor.
1	R4	820-ohm, ½-watt, 10%, carbon resistor.
1	R5	100,000-ohm, ½-watt, 10%, carbon resistor.
1	R6	1000-ohm, 1-watt, 10%, carbon resistor.
1	L1	2-turn link of small hook-up wire wound around grounded end of L2 (see Fig. 5-7).
2	L2, L3	**10 meters**—0.9 to 1.6 μH, set for 1.2 μH (Miller 4403 or equiv., or constructed by 9¼ turns of No. 24 enameled copper wire closewound on ⅜" diameter slug-tuned coil form).

PARTS LIST—Cont'd

Quantity	Item No.	Description
1	L4	**15 meters**—1.5 to 3.2 μH, set for 2.2μH (Miller 4404 or equiv., or constructed of 12¼ turns of No. 26 enameled copper wire closewound on ⅜" diameter slug-tuned coil form). **20 meters**—3.1 to 6.8 μH, set for 5.5 μH (Miller 4405 or equiv., or constructed by 18¼ turns of No. 28 enameled copper wire closewound on ⅜" diameter slug-tuned coil form). **10 meters**—0.9 to 1.6 μH, set for 1.2 μH (Miller 4403 or equiv., or constructed of 9¼ turns of No. 24 enameled copper wire closewound on ⅜" diameter slug-tuned coil form). **15 meters**—1.5 to 3.2 μH, set for 2.2 μH (Miller 4404 or equiv., or constructed of 12¼ turns of No. 26 enameled copper wire closewound on ⅜" diameter slug-tuned coil form). **20 meters**—6.7 to 15 μH, set for 10 μH (Miller 4406 or equiv., or constructed of 26¼ turns of No. 32 enameled copper wire closewound on ⅜" diameter slug-tuned coil form).
1	L5	6.7 to 15 μH, set for 8 μH (for 7-MHz output) Miller 4406 or equiv., or constructed by 26¼ turns of No. 32 enameled copper wire closewound on ⅜" diameter slug-tuned coil form).
1	L6	2-turn link of small hook-up wire wound around B+ end of L5 (see Fig. 5-7).
1	T1	Power transformer—secondaries: 135 VAC @ 50 ma; 6.3 VAC @ 1.5A (Triad R-30X, Merit P-3045, Stancor PA-8421, or equiv.).
1	S1	Dpst toggle switch.
1	Xtal	Crystal (International Crystal Type FA-9 or equiv.). Frequencies: 10 meters, 21 MHz; 15 meters, 14 MHz; 20 meters, 7 MHz.
1	D1	Silicon rectifier (Sarkes-Tarzian 2F4 or equiv.).
1	V1	6AK5 RF pentode.
1	V2	6J6 Dual triode.
1	J1	Coaxial chassis receptacle SO-239 (Amphenol 83-1R or equiv.).
1	J2	Shielded phone jack (Allied Radio 46 H 213, Lafayette MS-168, or equiv.).
1	TB1	3-lug terminal strip (Cinch-Jones Type 53 or equiv.).
1		Crystal socket. (Millen Type 33102 or equiv.).

PARTS LIST—Cont'd

Quantity	Item No.	Description
6		Solder lugs.
1		Shielded phone jack (Allied Radio 46 H 213, Lafayette MS-167, or equiv.).
2		7-pin miniature tube sockets (Amphenol Type 147-913 or equiv.).
1		7" × 5" × 3" aluminum chassis (Bud CU-2108 or equiv.).
2		⅜" rubber grommets.
1		A-c power cord (length as needed).
1		A-c power plug.
		6-32 machine screws and nuts.
		4-40 machine screws and nuts.
		Hook-up wire.
		Solder.

CHAPTER 6

LOW-NOISE, CRYSTAL-CONTROLLED 2-METER CONVERTER

Because of the crowded condition of the low-frequency amateur bands, interest in the vhf-uhf regions of the radio spectrum has grown in recent years. Also, activity in the 2-meter amateur band has increased with the opening of the band to novice- and technician-class amateurs, as well as the general-class operators already operating there. The frequency limits of the 2-meter band are 144 to 148 MHz, making a total of 4 MHz available to the general-class amateur. Novice- and technician-class operators are allowed to operate in a 2-MHz portion of the band: 145 to 147 MHz.

A 6CW4 *Nuvistor* is used as an r-f amplifier in the converter to be constructed in this chapter. This tube is responsible for the low-noise characteristics of the converter. The "state of the art" in vhf-uhf techniques has advanced in recent years. The low-noise *Nuvistor* is an example of the low-cost, low-noise tubes now available for work in this region. The *Nuvistor* was originally developed for use in television tuners; however, since its exceptionally low-noise qualities were enhanced by an equally low price tag, it was quickly adopted by ham circuit designers. A close-up view of the 6CW4 is shown in Fig. 6-1, along with a ½-watt resistor and a Type FA-5 overtone crystal to illustrate its small size. The tube is enclosed in a metal shield can.

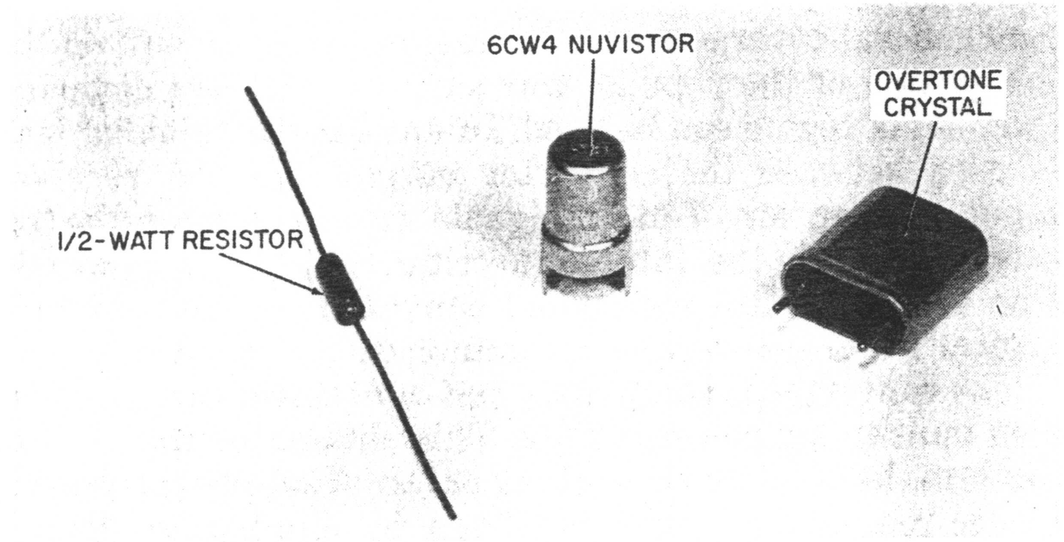

Fig. 6-1. The 6CW4 "Nuvistor" compared in size to an ordinary ½-watt resistor and a Type FA-5 overtone crystal.

Besides having an extremely low-noise front end, the converter is crystal controlled for exceptional stability. It is designed to work into any receiver that covers the 7-MHz region—the i-f output frequency of the converter.

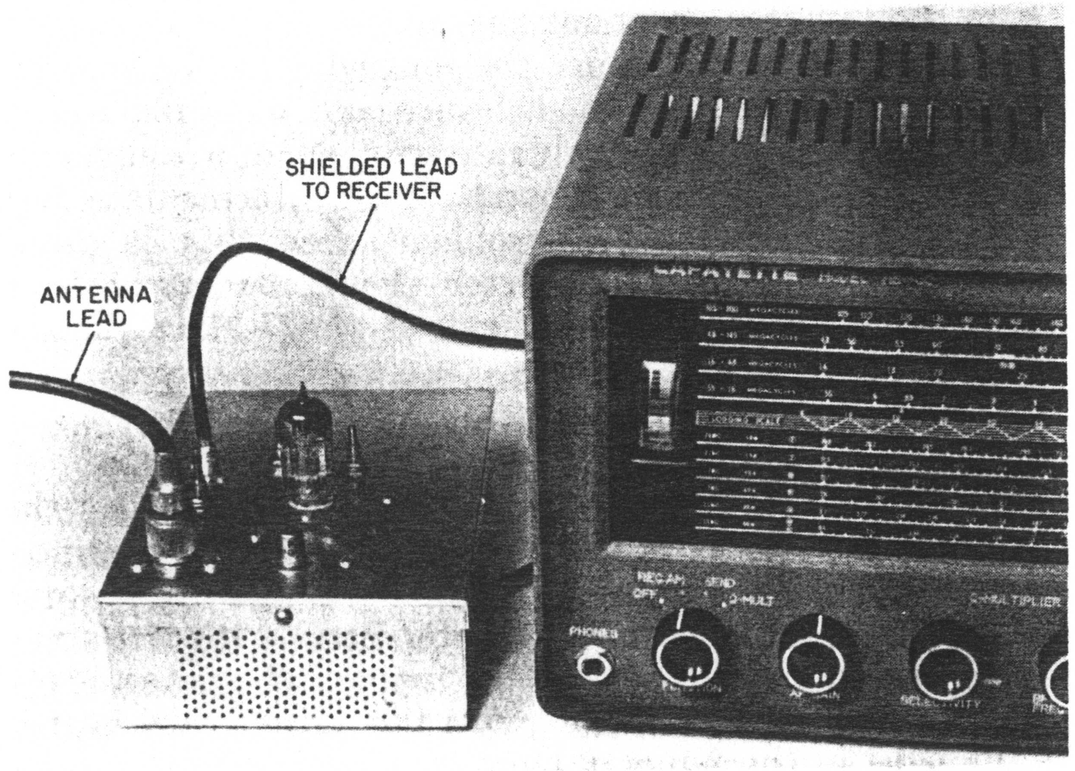

Fig. 6-2. The converter connected to a communications receiver.

Any general-coverage communications receiver will do the job, or any of the popular war surplus receivers covering the 7-MHz region can be used. In any case, a shielded lead is used between the converter output and the receiver input to keep any 7-MHz signals from entering the receiver through the interconnecting cable. The photo in Fig. 6-2 shows the completed converter hooked up to a typical general-coverage communications receiver.

The converter is completely self-contained, including its own built-in a-c power supply. This eliminates the need to tap into the receiver or another external supply for power. If desired, the power supply can be eliminated. Power requirements for the converter are nominal: 6.3 a-c volts at approximately 0.6 ampere for the filaments, and 150 d-c volts at approximately 30 milliamperes for B+ requirements.

Mobile operation is fairly popular on the 2-meter band; the circuit given in this chapter is suitable for mobile applications. If used in mobile applications, power can be supplied by the car radio or an external transistorized d-c to d-c inverter. Without the power supply shown in the accompanying diagrams, the converter can be repackaged into a much smaller enclosure and mounted under the dash. It is not desirable to run such a converter directly into the broadcast band for an intermediate frequency. Images become a problem when this is done, therefore, the 2-meter converter should be run into a "ham-band" converter which covers the 7-MHz region.

HOW IT WORKS

Fig. 6-3 shows the schematic of the converter and the a-c power supply. V1 is the 6CW4 *Nuvistor* r-f amplifier. The signal from the antenna is coupled to the tap on grid coil L1. L1 resonates in the 2-meter band with the stray capacitance in the circuit and the input capacitance of the tube. Plate coil L3 resonates with the output capacitance of the tube in the 2-meter band. A copper shield is used to isolate the grid circuit from the plate circuit. L2, a

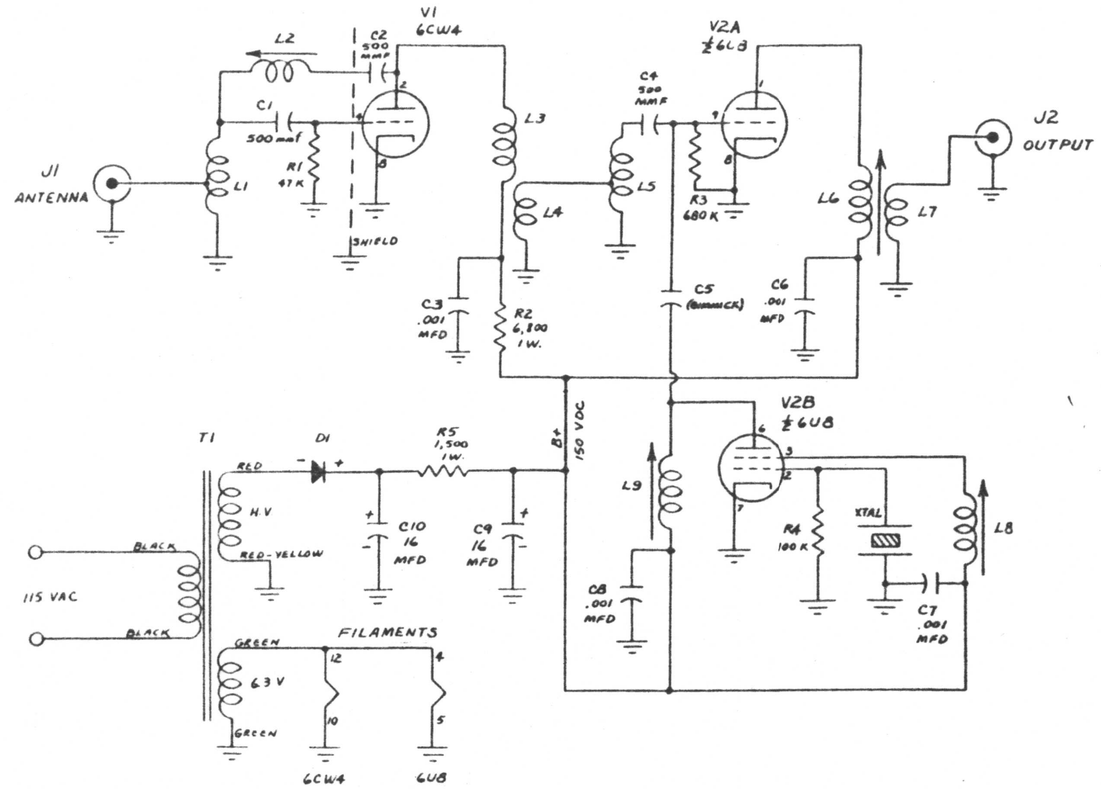

Fig. 6-3. Schematic of the crystal-controlled 2-meter converter.

subminiature, slug-tuned coil, serves as the neutralizing coil; once it has been set, it requires no further adjustment, unless the tube is changed.

The triode section of a 6U8 (V2A) serves as the mixer. The mixer grid coil (L5) resonates at 2-meters with the input capacitance of the tube. L4 is a 2-turn link wound around the B+ end of L3; it couples the amplified incoming signal to the tap on L5. The output coil (L6) is tuned to the intermediate output frequency in the 7-MHz region, and the 3-turn link (L7) couples the output signal to the receiver via the output jack (J2).

The pentode section of the 6U8 (V2B) serves as the crystal-controlled local oscillator. This oscillator employs a circuit not commonly found; however, it is ideal for use with overtone crystals, and especially where multiples of the overtone frequency are desired. A self-resonant, slug-tuned coil is connected to the screen grid. This coil (L8), is tuned to 45.666 MHz—the crystal frequency. The plate coil (L9) is tuned to a frequency three times that of the

crystal frequency, or approximately 137 MHz. The intermediate frequency is equal to the difference between the incoming signal (144 MHz) and the oscillator output frequency (137 MHz), or 7 MHz. Therefore the i-f tuning range is 7 to 11 MHz (144 minus 137 = 7 MHz, and 148 minus 137 = 11 MHz). The i-f output can be shifted to meet individual requirements simply by changing the crystal frequency and retuning coils L6, L8, and L9. The oscillator output signal is coupled to the mixer via gimmick capacitor C5. This capacitance is formed by twisting two pieces of insulated hook-up wire together (making sure the wire ends do not touch each other); each piece of wire should be approximately 1 inch in length.

The power supply is conventional. A small instrument power transformer is employed for the high voltage and filament power. A silicon rectifier (D1) serves as a half-wave rectifier and C9, C10, and R5 form a pi-section RC filter.

No power on-off switch is employed in the circuit of Fig. 6-3. This was not an oversight; the switch was intentionally left off. Many comunications receivers have an accessory a-c outlet on their rear deck which is controlled by the receiver power switch. If your receiver has an accessory a-c outlet you can merely plug the converter into this outlet and the receiver switch will control both the converter and the receiver. If your receiver has no accessory outlet, an on-off switch should be added in the primary circuit of the power transformer.

CONSTRUCTION

A special 5″ × 7″ × 12″ aluminum chassis with cap cover (Fig. 6-2) is used to house and completely shield the converter. If such a chassis is not available in your area, an ordinary aluminum chassis with the same dimensions can be substituted. The chassis is inverted to serve as the base and a top cover is made from aluminum sheet stock. For mobile applications a smaller chassis box will serve the purpose.

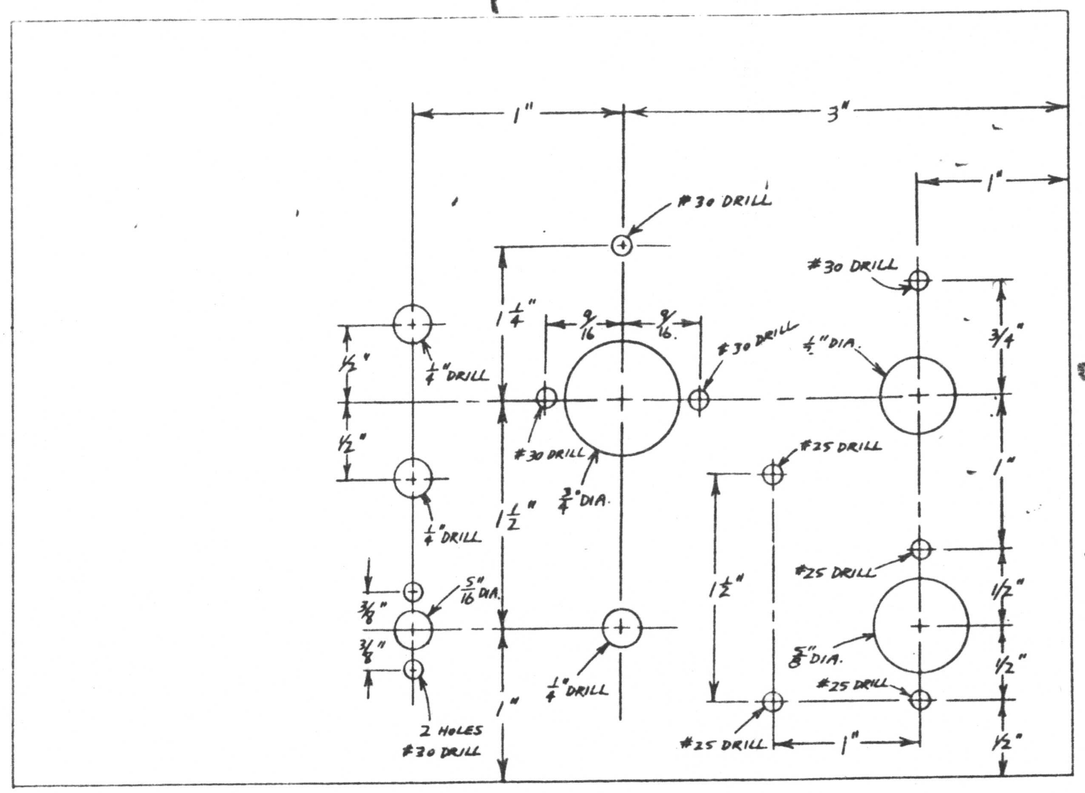

Fig. 6-4. Chassis cover layout and hole-drilling guide.

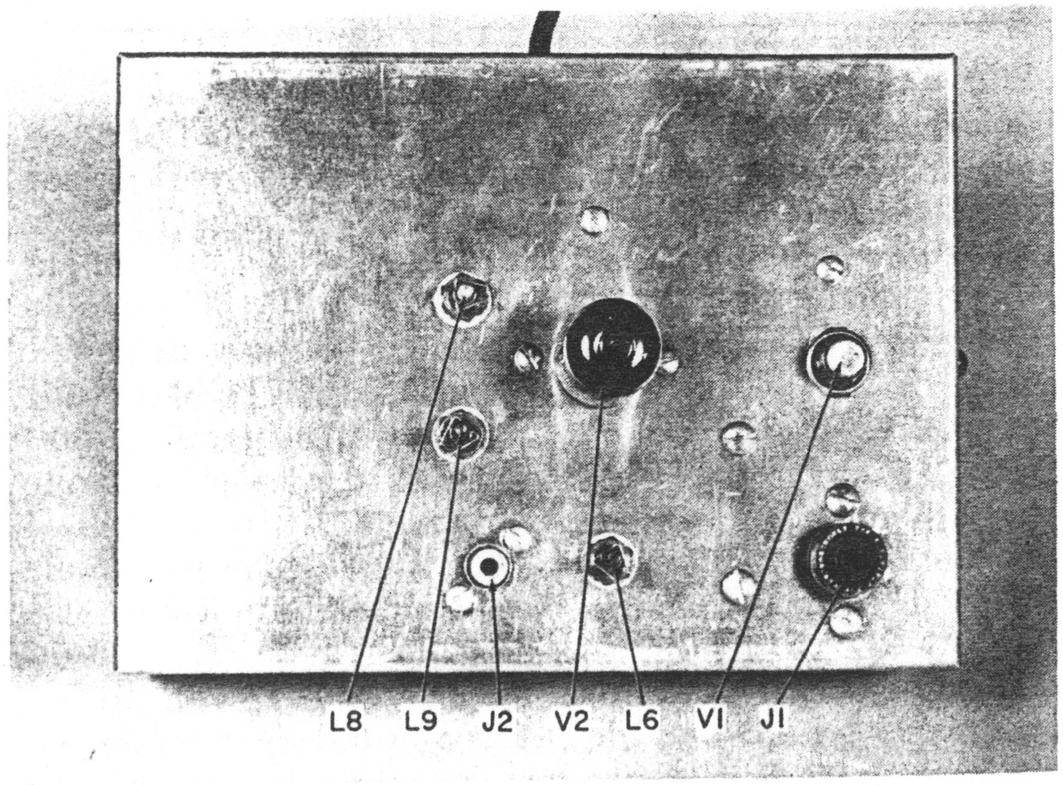

Fig. 6-5. Top view of the converter showing location of components.

The r-f circuitry is constructed on the top cover. The hole locations are given in Fig. 6-4, and Fig. 6-5 shows a top view of the completed chassis. A special socket which mounts into a ½-inch hole is required for the 6CW4 tube. Two slots must be filed on opposite sides of the mounting hole to allow two small tabs on the socket to clear. These tabs are then bent over against the chassis to hold the socket in place.

The major components are mounted and oriented as shown in the pictorial diagram in Fig. 6-6. Link coil L7 is wound around the B+ end of L6, prior to installing L6. The method of winding and positioning of the link was given in Fig. 5-7. Be sure to mount the *Nuvistor* tube socket with the pins pointing in the direction shown in Fig. 6-6. The copper shield shown in Fig. 6-7 is installed

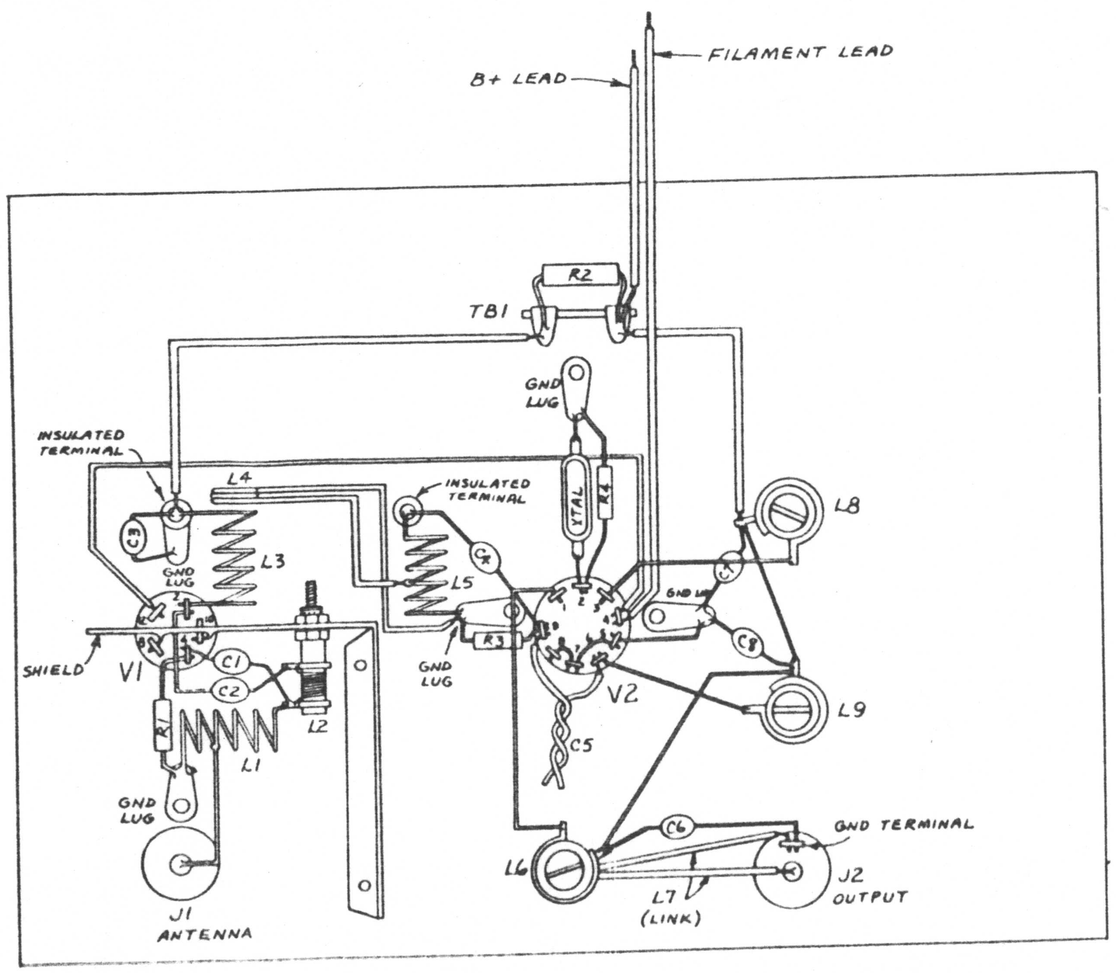

Fig. 6-6. Pictorial wiring diagram of the converter section.

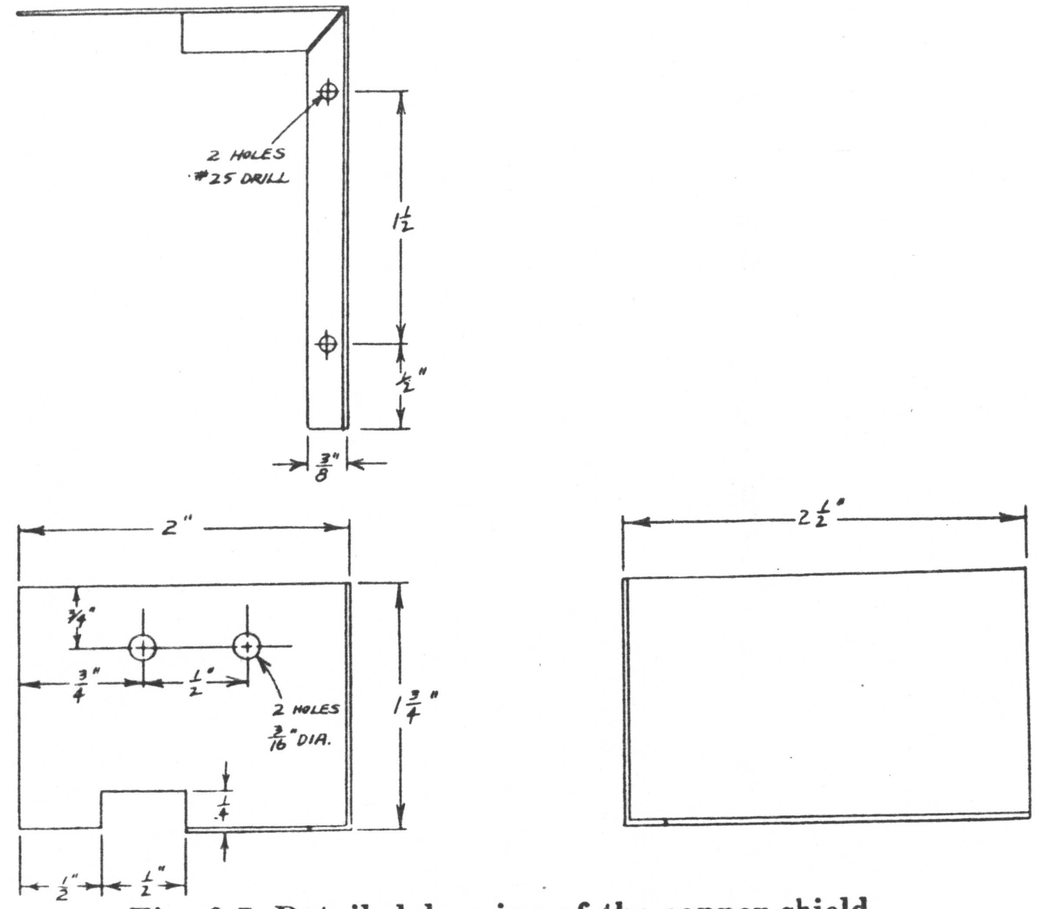

Fig. 6-7. Detailed drawing of the copper shield.

so that one side runs down the middle of the *Nuvistor* socket. Pins 8 and 10 are soldered directly to the copper shield. Capacitor C2 is run through a hole in the shield—make sure the capacitor leads do not short out to the shield. Coil L2 is mounted on the shield assembly.

Follow the pictorial wiring diagram in Fig. 6-6 and the photo of Fig. 6-8 as a guide, and use direct, point-to-point wiring in the r-f section. Keep the lead lengths as short as possible, particularly the r-f bypass capacitor leads. Small disc-ceramic capacitors (¼-inch diameter) should be used as r-f bypasses (0.001 mfd). Their small size and low series inductance make them ideal at these high frequencies.

The power supply is built into the chassis base. The components in the power supply and the r-f circuit components in the top cover are arranged so that they clear each other when the top cover is fastened to the chassis

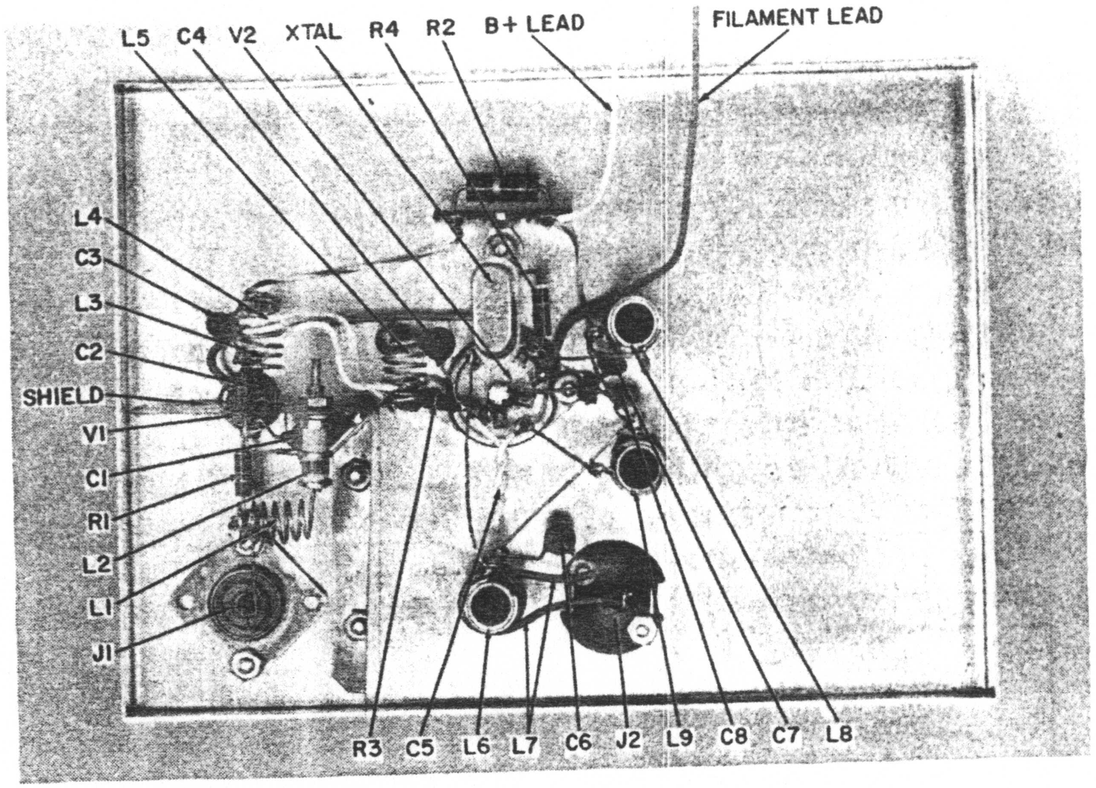

Fig. 6-8. Bottom view of the converter wiring.

base. The pictorial wiring diagram (Fig. 6-9) and the photo (Fig. 6-10) of the power supply can be followed when wiring this portion. Lead lengths are not critical; however, observe the polarity of the electrolytic capacitors and the silicon rectifier when wiring them into the circuit. Also avoid overheating the silicon rectifier when soldering to the leads. It is best to hold the diode lead near the body with a pair of needle-nose pliers while soldering; this helps conduct the heat away from the body of the diode rectifier.

ALIGNING THE CONVERTER

Before attempting to use the converter, check the wiring against both the schematic and pictorial diagrams to make sure it is correct. Make sure no leads are shorting to ground. If a grid-dip meter is available, it is best to set all the coils to their operating frequencies before turning

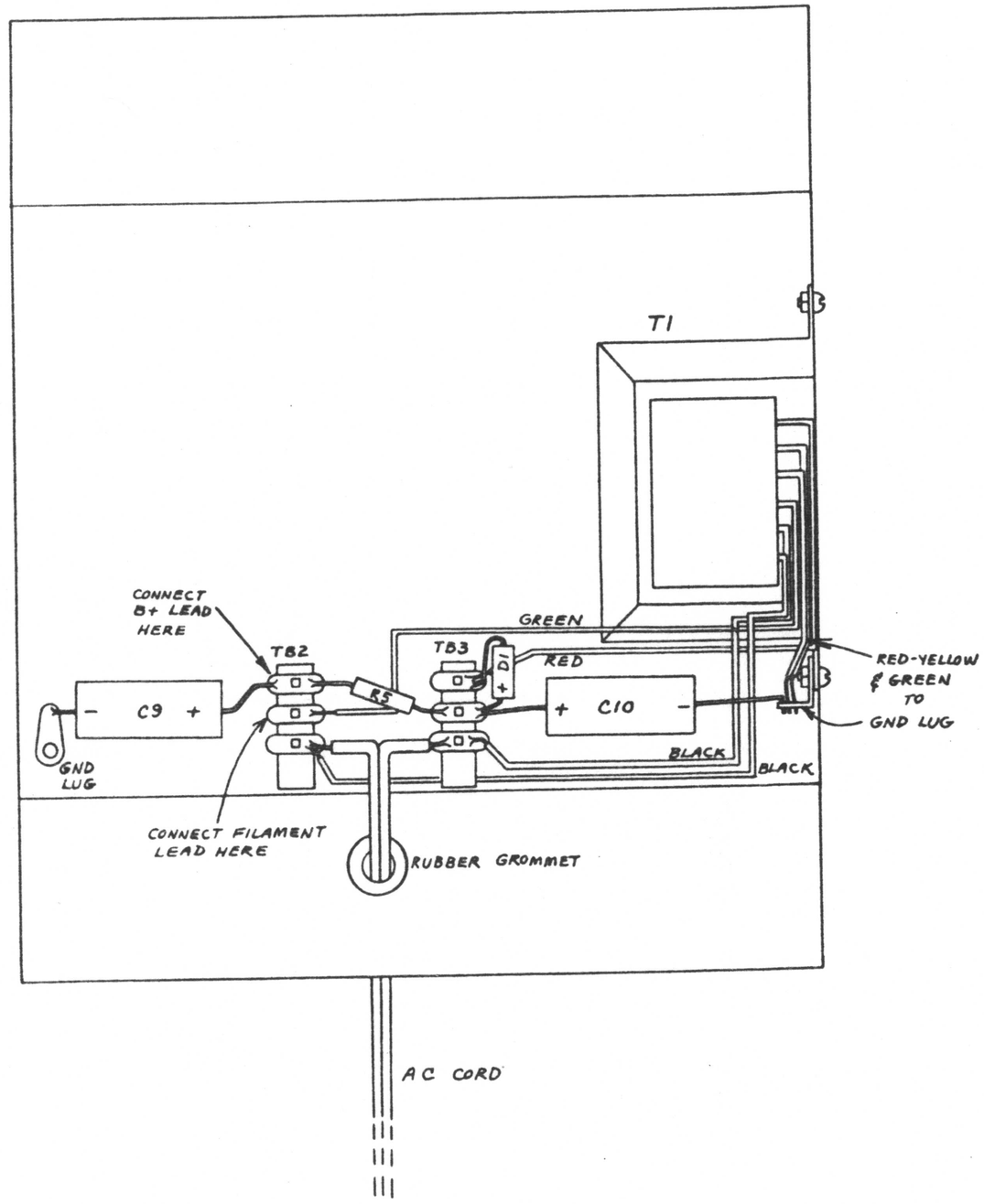

Fig. 6-9. Pictorial wiring diagram of the power supply section.

on the converter. The coils should be peaked in the vicinity of the band where you intend to operate the most. It is impossible to make the tuned circuits broad enough to cover the entire band, and ensure a reasonable value of *Q* for the coils.

After the coils have been set to the proper frequency, turn the converter on. Allow the tubes to warm up for a

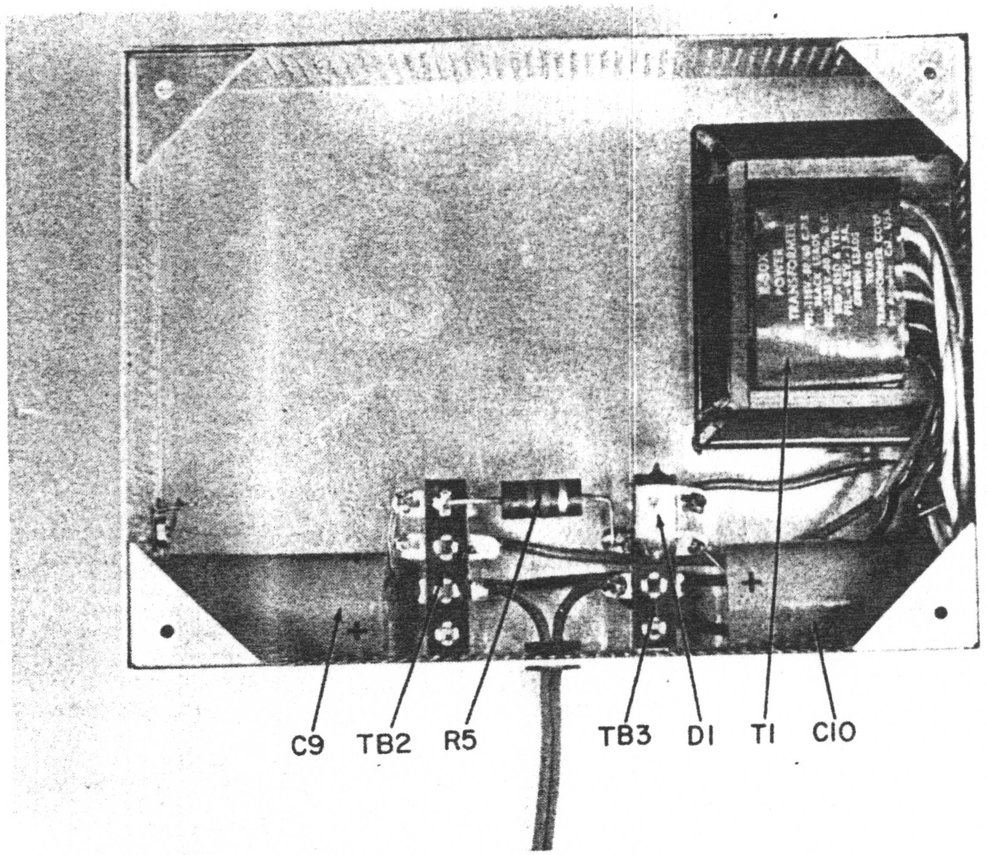

Fig. 6-10. View of the power-supply wiring.

minute. Check the B+ with a vom connected across capacitor C9 (from the positive end of C9 to ground). The B+ should be approximately 150 volts. The oscillator coils can be peaked up with a wavemeter, or with the grid-dip meter operating in the wavemeter mode.

The final step is to neutralize r-f amplifier, V1. Connect the converter to the receiver with a length of shielded wire (Fig. 7-2). Turn the converter off, remove the filament lead from V1, and then turn the converter back on. Next, couple a test signal into the converter. This can come from a grid-dip meter, signal generator, nearby transmitter, etc. Tune the receiver so that the signal can be heard. Adjust L2 for minimum signal output heard from the receiver or, if the receiver is equipped with an S meter, tune for a sharp dip in the meter reading. The stage is now neutralized. Connect the filament lead to V1 once again, and the converter is ready for operation.

PARTS LIST

Quantity	Item No.	Description
3	C1, C2, C4	500-mmf, 10%, 1000V, disc-ceramic capacitors.
4	C3, C6, C7, C8	.001-mfd GMV, 1000V, disc-ceramic capacitors.
1	C5	Gimmick capacitor (see text for details).
2	C9, C10	16-mfd, 350VDC, electrolytic capacitors.
1	R1	47,000-ohm, ½-watt, 10%, carbon resistor.
1	R2	6800-ohm, 1-watt, 10%, carbon resistor.
1	R3	680-000-ohm, ½-watt, 10%, carbon resistor.
1	R4	100,000-ohm, ½-watt, 10%, carbon resistor.
1	R5	1500-ohm, 1-watt, 10%, carbon resistor.
1	L1	6-turns of No. 20 tinned copper wire, air-wound ⅜" diameter, spaced to ½" length, tapped 1¾ turns from ground end.
1	L2	1.5 to 2.57 μH neutralizing coil (Miller 4306 or equiv., or 17¼ turns No. 33 enameled copper wire closewound on ¼" diameter slug-tuned coil form).
1	L3	6 turns of No. 20 tinned-copper wire, air-wound ⅜" diameter, spaced to ½" length.
1	L4	2-turn link of small hook-up wire wound around B+ end of L3.
1	L5	6 turns of No. 20 tinned copper wire, air-wound ⅜" diameter, spaced to ½" length, tapped 1½ turns from ground end.
1	L6	14.8 to 31.0 μH (Miller 4407 or equiv.).
1	L7	3-turn link of small hook-up wire wound around B+ end of L6.
1	L8	1.5 to 3.2 μH coil (Miller 4404 or equiv., or 12¼ turns of No. 26 enameled copper wire closewound on ⅜" diameter slug-tuned coil form).
1	L9	3 turns of No. 24 enameled copper wire closewound on ⅜" diameter slug-tuned coil form (Miller 4400, or equiv. coil form).
1	T1	Power transformer—secondaries: 135 VAC @ 50 ma; 6.3 VAC @ 1.5A (Triad R-30X, Merit P-3045, Stancor PA-8421, or equiv.).
1	Xtal	45.666-MHz third-overtone crystal (International Crystal FA-5 or equiv.).
1	D1	Silicon rectifier (Sarkes-Tarzian 2F4 or equiv.).
1	V1	6CW4 "Nuvistor" triode.
1	V2	6U8 triode-pentode tube.
1	J1	Coaxial chassis receptacle SO-239 (Amphenol 83-1R or equiv.).

PARTS LIST—Cont'd

Quantity	Item No.	Description
1	J2	Shielded phono jack (Allied Radio 46 H 213, Lafayette MS-168, or equiv.).
1	TB1	2-lug terminal strip, both terminals insulated from ground.
2	TB2, TB3	3-lug terminal strips, all terminals insulated from ground.
1		Crystal socket (Millen 3302 or equiv.).
7		Solder lugs.
1		Shielded phono plug (Allied Radio 46 H 212, Lafayette MS-167, or equiv.).
1		"Nuvistor" socket (Cinch-Jones Type 5NS or equiv.).
1		9-pin miniature tube socket (Amphenol 59-406).
1		5" × 7" × 8" aluminum chassis with cap cover (LMB Type 572 or equiv.).
1		3/8" rubber grommet.
2		Miniature standoff insulators.
1		Piece of sheet copper for shield (see Fig. 7-6).
1		A-c power cord (length as required).
1		A-c power plug.
		6-32 machine screws and nuts.
		4-40 machine screws and nuts.
		Hook-up wire.
		Solder.

ALL-BAND, PHONE-CW TRANSMITTER

The all-band transmitter described in this chapter is ideal as a station transmitter, either as the main transmitter or as a standby unit. Since it is a compact, completely self-contained unit, it is also handy to take along on a vacation trip. Though this unit is ideal for the beginning amateur, its construction should be tackled only by those who have had some practical experience with circuits of this nature.

The all-band transmitter covers the 10- through 80-meter amateur bands, and runs approximately 40 watts on phone and c-w modes. It is crystal controlled; however, a vfo can be used with it. A complete power supply and a plate modulator, which includes a preamp section for

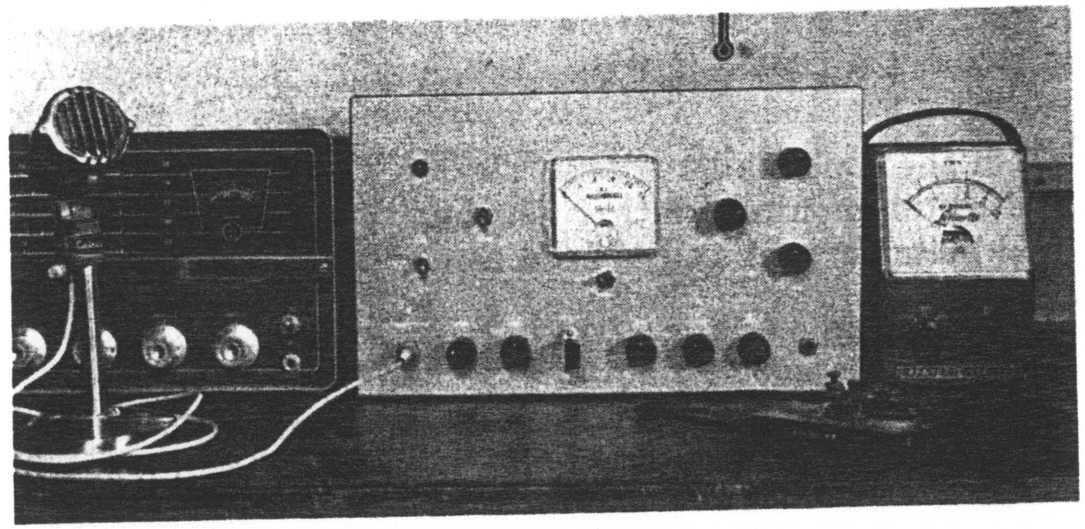

Fig. 7-1. The complete all-band station.

crystal microphone operation, are included in the transmitter package. Fig. 7-1 shows a photograph of the transmitter in a typical station setup, with the receiver on the left, and a swr-power meter on the right. The crystal mike and key are seen in the foreground.

For ease of operation, all the necessary controls for bandswitching and tuning are located on the front panel. A close-up view of the front panel is shown in Fig. 7-2.

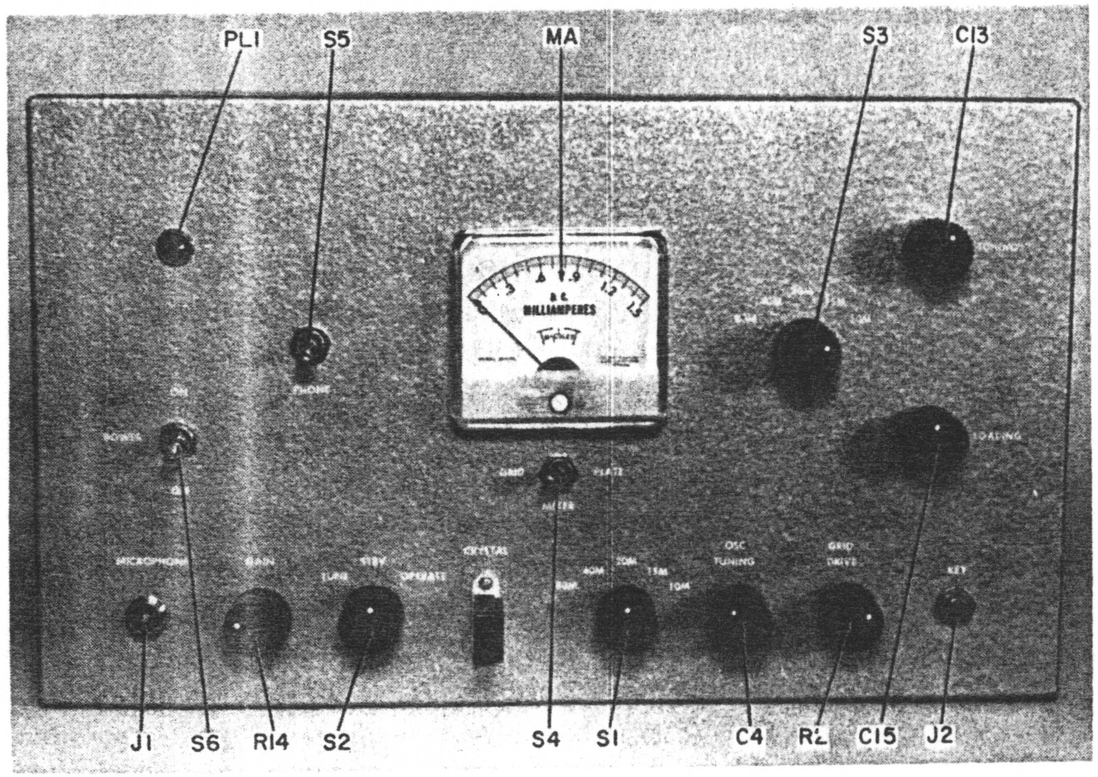

Fig. 7-2. Close-up view of the transmitter.

All of the controls have been clearly marked with decals. The meter monitors either the final grid current or the final plate current and is used as the tuning indicator.

HOW IT WORKS

The transmitter schematic is shown in Fig. 7-3, and the power supply schematic in Fig. 7-4. V1, a 5763, serves as a crystal oscillator. The plate circuit, consisting of C4, L1, and L2, is tuned to the crystal frequency or one of its

harmonics. For instance, an 80-meter crystal can be used for both 80- and 40-meter operation. In this case the oscillator doubles into the 40-meter band. A 40-meter crystal is used when operating in the 40-, 20-, 15-, and 10-meter bands. The oscillator operates straight through on 40 meters. It is tuned to the second harmonic on 20 meters, the third harmonic on 15 meters, and the fourth harmonic on 10 meters. L1 and L2 are tapped coils, and switch S1 selects the proper tap for the desired operating frequency.

The grid drive to the final amplifier is changed by varying the screen voltage on the 5763 oscillator tube with R2. This change in screen voltage varies the output power of the oscillator and, hence, the input of the final amplifier. The oscillator signal is capacitively coupled to the grid of the 6DQ6 (V2) which operates as a class-C power amplifier. The final amplifier is grid-leak biased. The pi-tank circuit in the output, or plate side, of the final amplifier enables the rig to be matched into a variety of antennas. C13 serves as the tuning capacitor, and C15 as the loading capacitor for the pi-tank circuit. The pi-tank actually consists of two coils which are tapped. The proper tap for the desired band of operation is selected by S3. In operation both S1 and S3 are set to the same band.

Since the 6DQ6 is a very high-gain tube, it is neutralized to avoid oscillation. Capacitors C5 and C8 form the neutralizing network between the plate and grid of the final amplifier. The cathode of the 6DQ6 is returned to ground through a closed-circuit phone jack. For c-w operation a key is inserted into this jack, and only the final is keyed. Thus, the oscillator runs continuously during c-w operation.

A 2-pole, 3-position rotary switch is used to switch the screen grid of the 6DQ6 and the high-voltage center tap of the power transformer simultaneously. This switch (S2) serves as the Standby-Operate control and is also used to "tune" the oscillator. In the Standby position, the center tap of the power-supply, high-voltage winding is ungrounded, and, therefore, B+ is removed from the

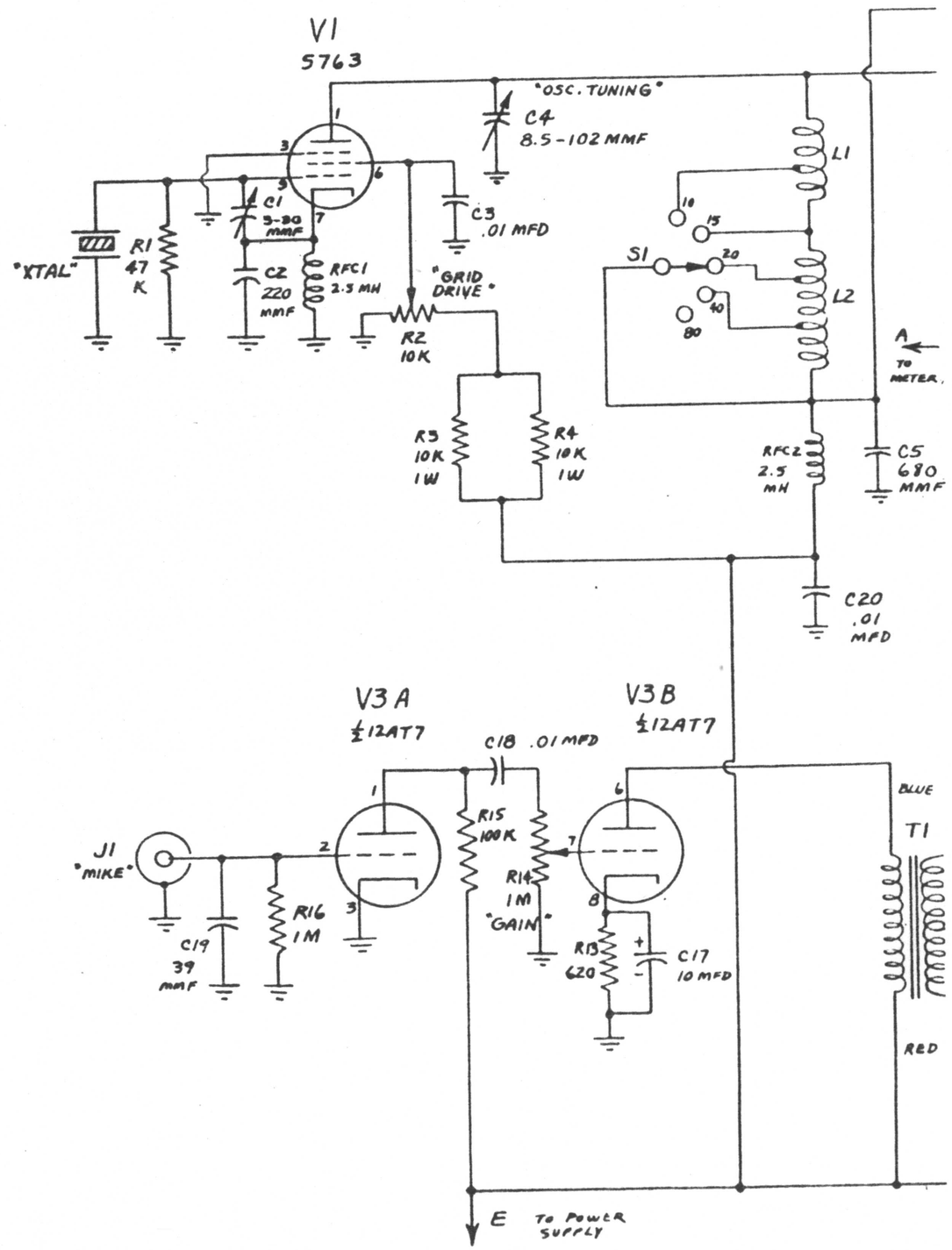

Fig. 7-3. Schematic of the

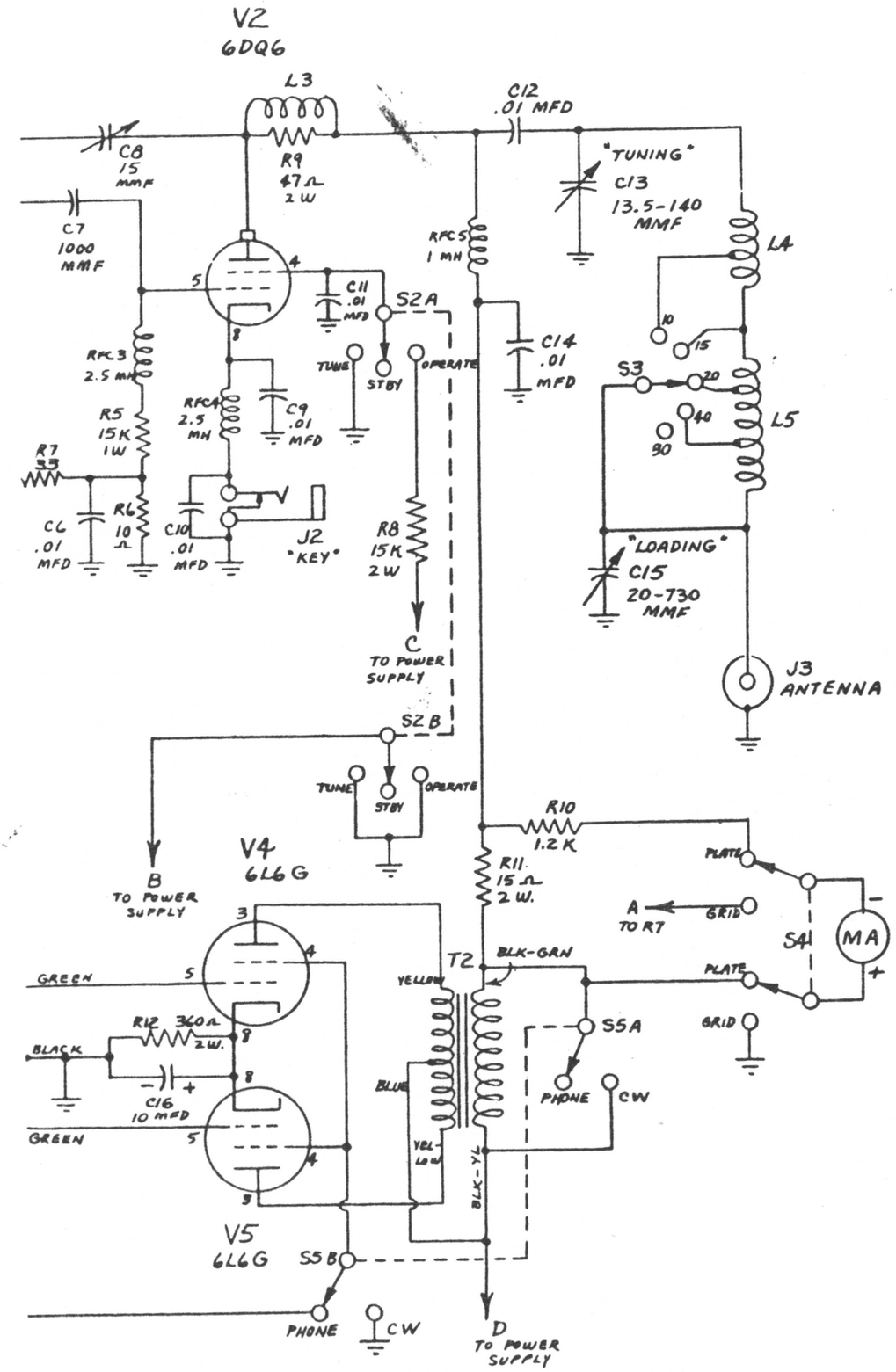

10-80 meter, phone/c-w rig.

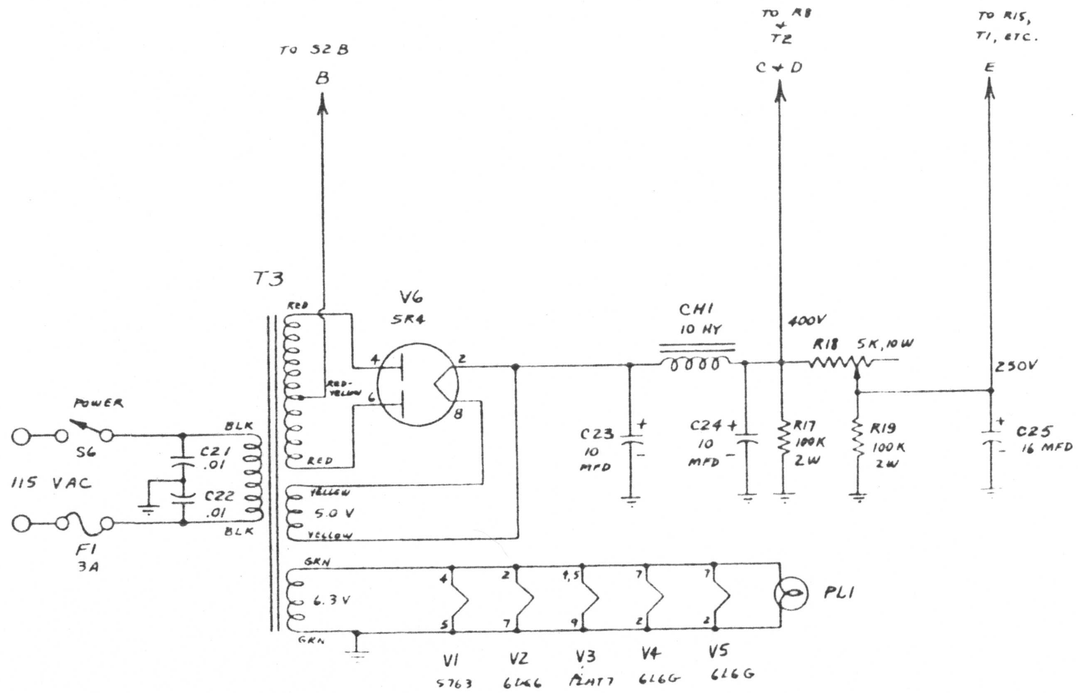

Fig. 7-4. Schematic of the power supply.

transmitter. In the Tune position, the screen grid of the 6DQ6 is grounded thereby preventing the final from drawing excessive current which could damage it, while the oscillator is being tuned. At this time, the high-voltage center tap is grounded. In the Operate position the center tap is again grounded, and power is fed to the screen of the 6DQ6. L3 and R9, which are in the plate circuit of the 6DQ6, form an r-f choke used to suppress parasitic oscillations.

V3 is a two stage preamp which amplifies the audio from the crystal microphone. The driver transformer (T1) couples audio from the plate of V3B to the grids of the push-pull, class-B 6L6 output stage, (V4 and V5). This section is the plate modulator for the final amplifier. T2 is a universal modulation transformer. This transformer is provided with a number of taps making possible a variety of impedance matching. The leads used here were selected to provide an impedance match of 6000 ohms to the modulator and 4000 ohms to the final amplifier. During c-w operation, S5 shorts the secondary of the modulation transformer, and also removes high

voltage from the screen grids of the 6L6's, and grounds them. This action disables the modulator.

A 1.5 d-c milliammeter is used for the transmitter tuning indicator; it is switched to the grid or the plate circuit of the 6DQ6 final-amplifier tube. Meter shunts are provided in the respective circuits; when the meter is reading grid current, the actual full-scale reading of the meter is 15 ma, and when switched to the plate circuit, the actual full-scale meter reading is 150 ma.

The power supply is conventional in all respects. It provides approximately 400 d-c volts for the final amplifier and the modulator-output stage. Two hundred fifty d-c volts is provided for the oscillator tube, the screen grids of the modulator tubes, etc. R-f bypass capacitors are used in the primary of the power transformer to keep r-f from being coupled back into the power line. E6 serves

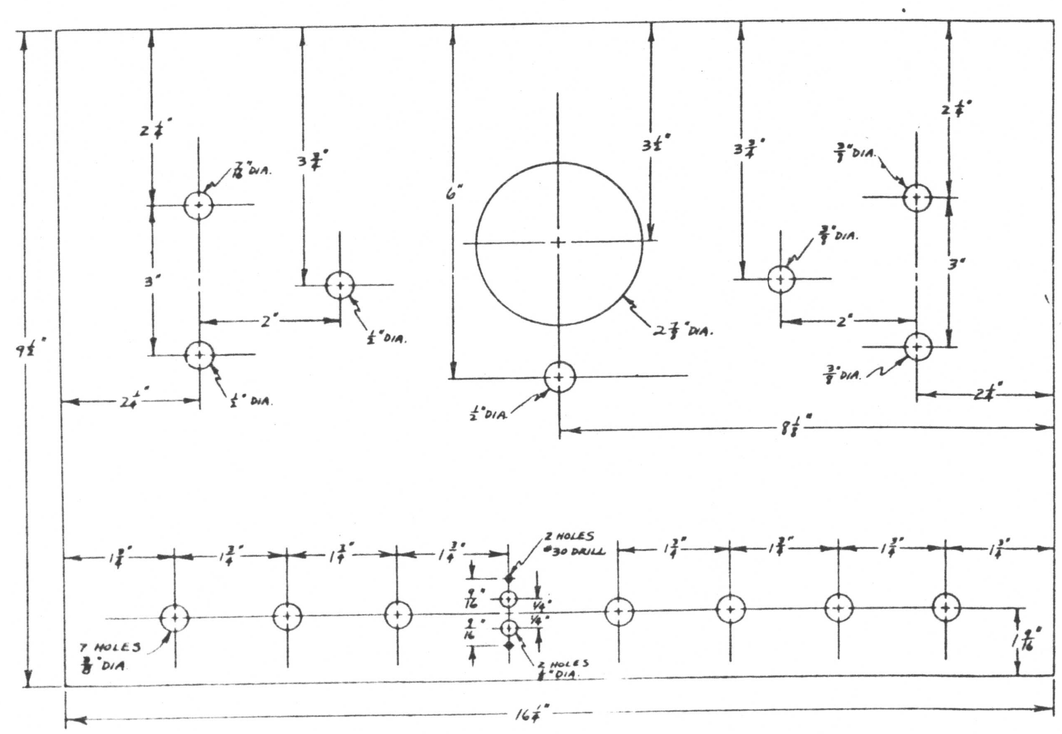

Fig. 7-5. Hole-location drawing of the front panel.

as the power switch, and pilot light, PL1, indicates when the power is on.

CONSTRUCTION

The transmitter is housed in a cabinet measuring 9½″ × 16¼″ × 11″. An 11″ × 16″ × 3″ aluminum chassis fits into this enclosure, and the transmitter circuitry is constructed on it. The hole-location drawing in Fig. 7-5 gives the locations of all the controls and the meter on the front panel. The layout drawing of the chassis is given in Fig. 7-6. The front panel is held to the chassis by

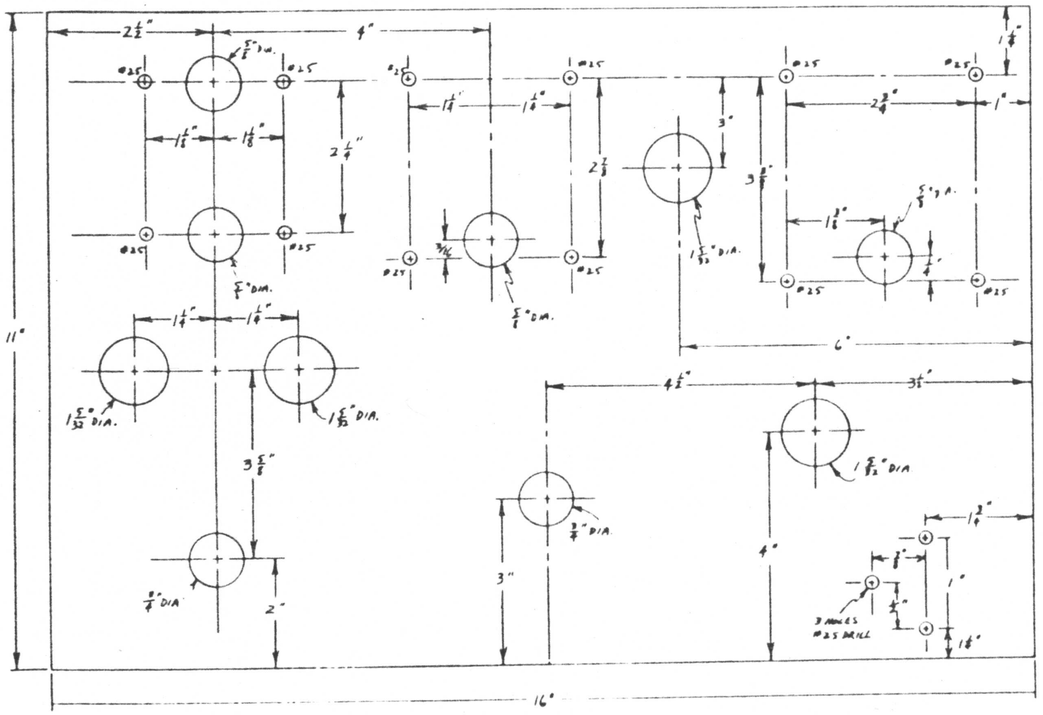

Fig. 7-6. Hole-location drawing of the chassis.

means of the various controls, switches, and jacks located along the bottom row of the front panel. Holes should be made on the front side of the chassis corresponding to those along the bottom row on the front panel. The holes on the back side of the chassis are shown in Fig. 7-7. The major components can be mounted and located by referring to Figs. 7-8 and 7-9.

In the photo of the top of the chassis (Fig. 7-8) 5881 tubes have been submitted for the 6L6's. Either 6L6 or 5881 tubes may be used in this application. Although not shown in the photo of the top of the chassis, the entire

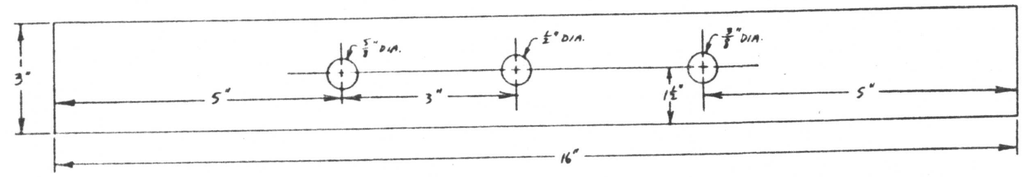

Fig. 7-7. Hole-location drawing of the rear apron of the chassis.

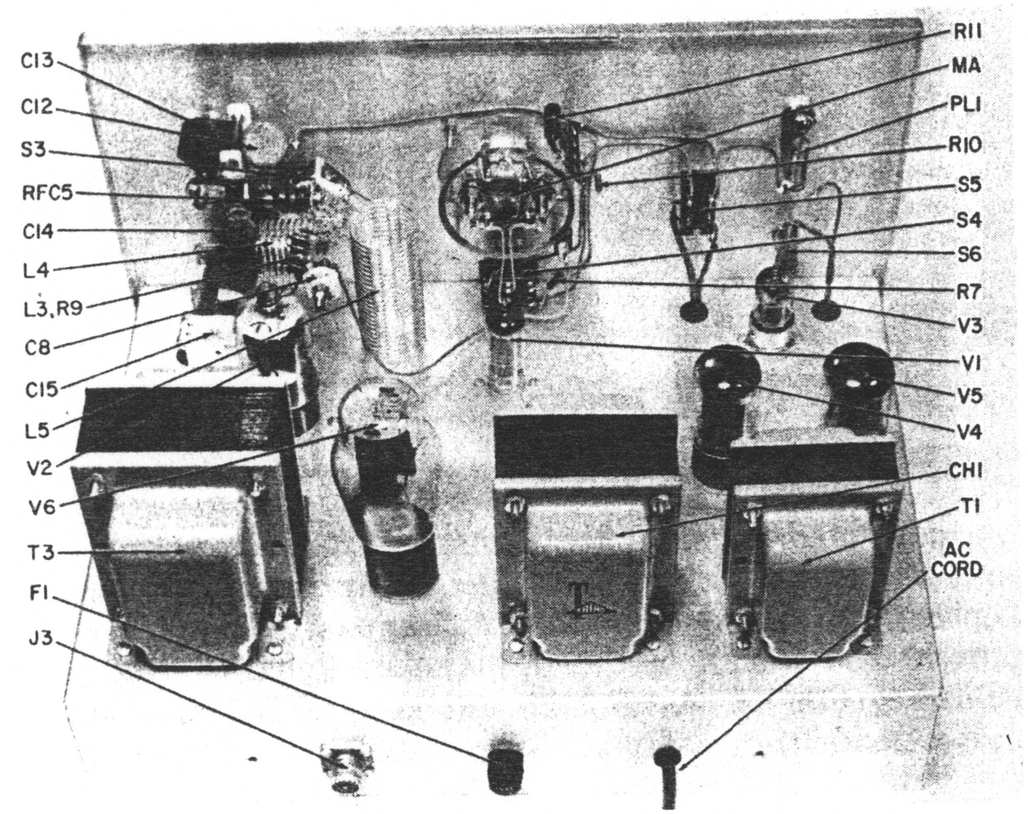

Fig. 7-8. Top view of the chassis.

final-amplifier circuit should be shielded from the meter and surrounding tubes. The final-amplifier output circuit located above the chassis can be enclosed in a shielded enclosure made of perforated aluminum stock. One side of the shield should run between L5 and the meter, and the other side between V2 and T3.

The oscillator coils (L1 and L2, Fig. 7-9) and the pi-tank coils (L4 and L5, Fig. 7-8) are supported directly

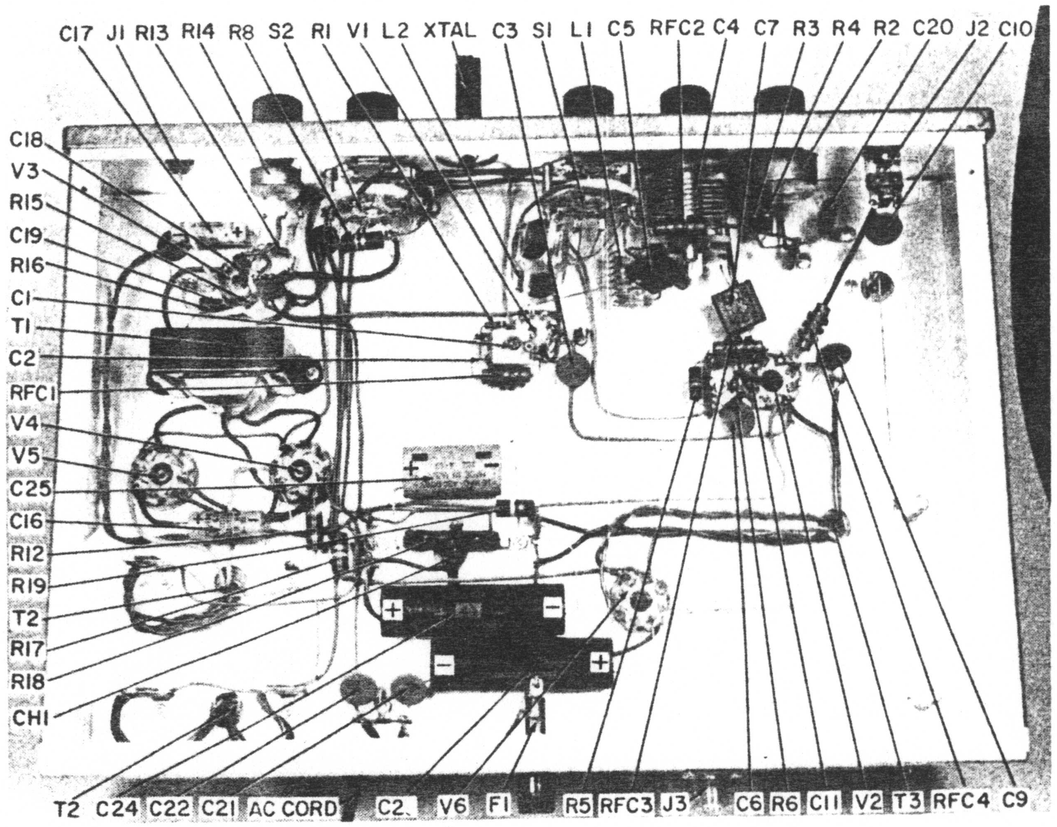

Fig. 7-9. Bottom view of the chassis.

by their leads, which are cut as short as practical and soldered to the rotary switches. All r-f leads should be kept short, particularly those of bypass capacitors. The power cord is run in through the back panel through a rubber grommet. A knot should be tied in the cord directly inside the grommet.

TRANSMITTER OPERATION

Make sure the transmitter has been properly wired before applying power to it. Set switch S2 to the Tune position and switch S5 to the c-w position. Insert a crystal into the crystal socket and set the bandswitches to the proper band. Now, turn the power on and check the high voltage with a vom. The reading at the junction of CH1 and R18 should be approximately 400 volts. If this reading is obtained, proceed with the next step, which is adjusting the low-voltage output of the power supply. It is

measured across C25, and the slider on R18 is varied until a reading of approximately 250 volts is obtained. R18 is an adjustable wirewound resistor. Be sure to turn the power off each time you move the setting of this resistor.

With S2 still in the Tune position, adjust the oscillator by switching S4 to the Grid position, and tuning C4 for a maximum indication on the meter. In actual operation, the grid current should be held to 3 mils or less by adjusting the Grid Drive control (R2).

Connect a suitable antenna or dummy load, such as a 60-watt light bulb, to the antenna jack J3. Set switch S2 to Operate and S4 to the Plate position. Adjust the final tank circuit by tuning C13 for a dip in the meter reading and C15 for loading or maximum current. Always go back and redip C13 after C15 has been tuned. It is a good idea to monitor the signal with a receiver when making these adjustments. The transmitter has now been checked out in the c-w mode.

The final amplifier is neutralized in the following manner. Disconnect the high-voltage lead (400-volt lead) to the final amplifier and modulator. This removes the high voltage from the plate and screen of the final amplifier. Turn the power on and monitor the final amplifier grid current. Tune C13 through resonance and observe the grid current. The meter will flicker as C13 is tuned. Carefully adjust neutralizing capacitor C8, until this flickering is minimized. Turn the power off and attach the high-voltage lead once again. The final is now neutralized, and the modulator can be checked out.

Attach a crystal microphone to J1 and set S5 to the Phone position. The signal should be monitored by a fellow ham across town, and the optimum modulator gain setting determined by an on-the-air test.

For vfo operation, an 80- or 40-meter vfo can be run directly into the crystal socket.

PARTS LIST

Quantity	Item No.	Description
1	C1	3-30—mmf standard trimmer capacitor.
1	C2	220-mmf, 5% 500V, silvered-mica capacitor.
10	C3, C6, C9 C10, C11, C14 C18, C20, C21 C22	.01-mfd GMV, 1000V, disc-ceramic capacitors.
1	C4	8.5-102—mmf variable capacitor (Johnson 149-5 or equiv.).
1	C5	680-mmf, 5%, 500V, silvered-mica capacitor.
1	C7	1000-mmf, 5%, 500V, silvered-mica capacitor.
1	C8	15-mmf midget variable capacitor (Johnson 15J12 or equiv.).
1	C12	.01-mfd GMV, 1.2kv, disc-ceramic capacitor.
1	C13	13.5-140—mmf variable capacitor (Johnson 149-6 or equiv.).
1	C15	2-section 10-365—mmf midget variable broadcast capacitor (both sections paralleled).
1	C16	10-mfd, 50VDC, electrolytic capacitor.
1	C17	10-mfd, 25VDC, electrolytic capacitor.
1	C19	39-mmf, 10%, 100V, disc-ceramic capacitor.
2	C23, C24	10-mfd, 600VDC, electrolytic capacitors.
1	C25	16-mfd, 450VDC, electrolytic capacitor.
1	R1	47,000-ohm, ½-watt, 10%, carbon resistor.
1	R2	10,000-ohm, 5-watt potentiometer.
2	R3, R4	10,000-ohm, 1-watt, 10%, carbon resistors.
1	R5	15,000-ohm, 1-watt, 10%, carbon resistor.
1	R6	10-ohm, ½-watt, 10%, carbon resistor.
1	R7	33-ohm, ½-watt, 10%, carbon resistor.
1	R8	150,000-ohm, 2-watt, 10%, carbon resistor.
1	R9	47-ohm, 2-watt, 10%, carbon resistor.
1	R10	1200-ohm, ½-watt, 10%, carbon resistor.
1	R11	15-ohm, 2-watt, 10%, carbon resistor.
1	R12	360-ohm, 2-watt, 5%, carbon resistor.
1	R13	620-ohm, ½-watt, 5%, carbon resistor.
1	R14	1-megohm potentiimeter.
1	R15	100,000-ohm, ½-watt, 10%, carbon resistor.
1	R16	1-megohm, ½-watt, 10%, carbon resistor.
2	R17, R19	100,000-ohm, 2-watt, 10%, carbon resistors.
1	R18	5000-ohm, 10-watt, adjustable wirewound resistor.
1	L1	8 turns No. 18 tinned copper wire, wound to ⅝" diameter, spaced to 1-inch length, tapped 5 turns down from plate end (Air Dux 508T or B & W 3006 coil stock, or equiv.).

PARTS LIST—Cont'd

Quantity	Item No.	Description
1	L2	40 turns No. 24 tinned-copper wire, wound to 1" diameter, spaced to 1¼" length, tapped at 7 and 15 turns down from plate end (Air Dux 832 or B & W 3016 coil stock, or equiv.).
1	L3	4 turns of No. 14 copper wire wound around R9.
1	L4	8 turns No. 16 tinned-copper wire, wound to 1¼" diameter, spaced to 1" length, tapped 5 turns down from plate end (Air Dux 1008T or B & W 3018 coil stock, or equiv.).
1	L5	25 turns No. 16 tinned-copper wire, wound to 1¼" diameter, spaced to 3" length, tapped at 8 and 18 turns down from plate end (Air Dux 1008T or B & W 3018 coil stock, or equiv.).
4	RFC1, RFC2, RFC3, RFC4	2.5-mH r-f chokes (Miller 6302 or equiv.).
1	RFC5	1.0 mH r-f choke (Miller 4527 or equiv.).
1	CH1	10-henry, 200-ma, d-c choke (Triad C-16A or equiv.).
1	T1	Plate to p-p grids driver transformer (Triad A-85X).
1	T2	30-watt multimatch modulation transformer (Triad M-15A or equiv.).
1	T3	Power transformer—Secondaries: 400-0-400VAC @ 200ma; 5VAC @ 3A; 6.3VAC @ 6A (Triad R-121 or equiv.).
2	S1 S3	1-pole, 5-position ceramic rotary switches (Centralab 2501 or equiv.).
1	S2	2-pole, 3-position ceramic rotary switch (Centralab 2505 or equiv.).
2	S4, S5	Dpdt toggle switches.
1	S6	Spst toggle switch.
1	F1	3-amp, 3AG fuse.
1	PL1	6.3VAC, No. 47, bayonet-base pilot lamp.
1	Xtal	Crystal (3.5 MHz for 80 or 40 meters; 7 MHz for 40, 20, 15, or 10 meters).
1	V1	5763 pentode tube.
1	V2	6DQ6 beam-power output tube.
1	V3	12AT7 speech amplifier tube.
2	V4, V5	6L6G beam power tubes.
1	5R4	Rectifier tube.
1	J1	Microphone connector (Amphenol 75 PC1M or equiv.).
1	J2	Closed-circuit phone jacks.
1	J3	Coaxial chassis receptacle SO-239 (Amphenol 83-1R).

PARTS LIST—Cont'd

Quantity	Item No.	Description
1	MA	1.5-ma. d-c meter, 30-ohm internal resistance (Triplett 327-PL or equiv.).
1		Crystal socket (Miller 33102 or equiv.).
8		Knobs (National Type HR or equiv.).
1		9½" × 16" × 11" equipment cabinet, including 11" × 16" × 3" chassis, aluminum (California Chassis Co. Type LTC-472 or equiv.).
1		Fuse holder.
3		⅜" rubber grommets.
4		Ceramic octal tube sockets.
2		9-pin ceramic miniature tube sockets.
8		Solder lugs.
		6-32 machine screws and nuts.
		4-40 machine screws and nuts.
		Hook-up wire.
		Solder.

CHAPTER 8

TWO-METER PHONE TRANSMITTER

The 2-meter phone transmitter described in this chapter can be used as a fixed station or mobile transmitter. It is crystal controlled and plate modulated, and it is capable of running approximately 15 watts of power. The rig is ideal for the novice or technician as well as the general-class amateur; however, its construction should be tackled only by those who have had some experience in construction of vhf circuits.

The transmitter and the separate a-c power supply for fixed station operation are pictured in Fig. 8-1. The transmitter proper is a rather compact unit and is ideally

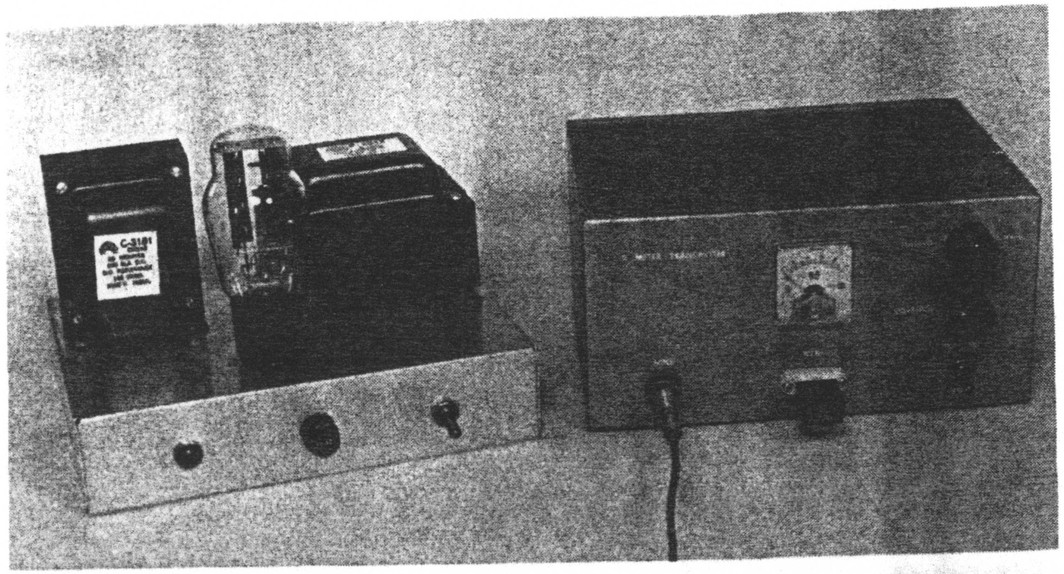

Fig. 8-1. The completed 2-meter transmitter with a-c power supply.

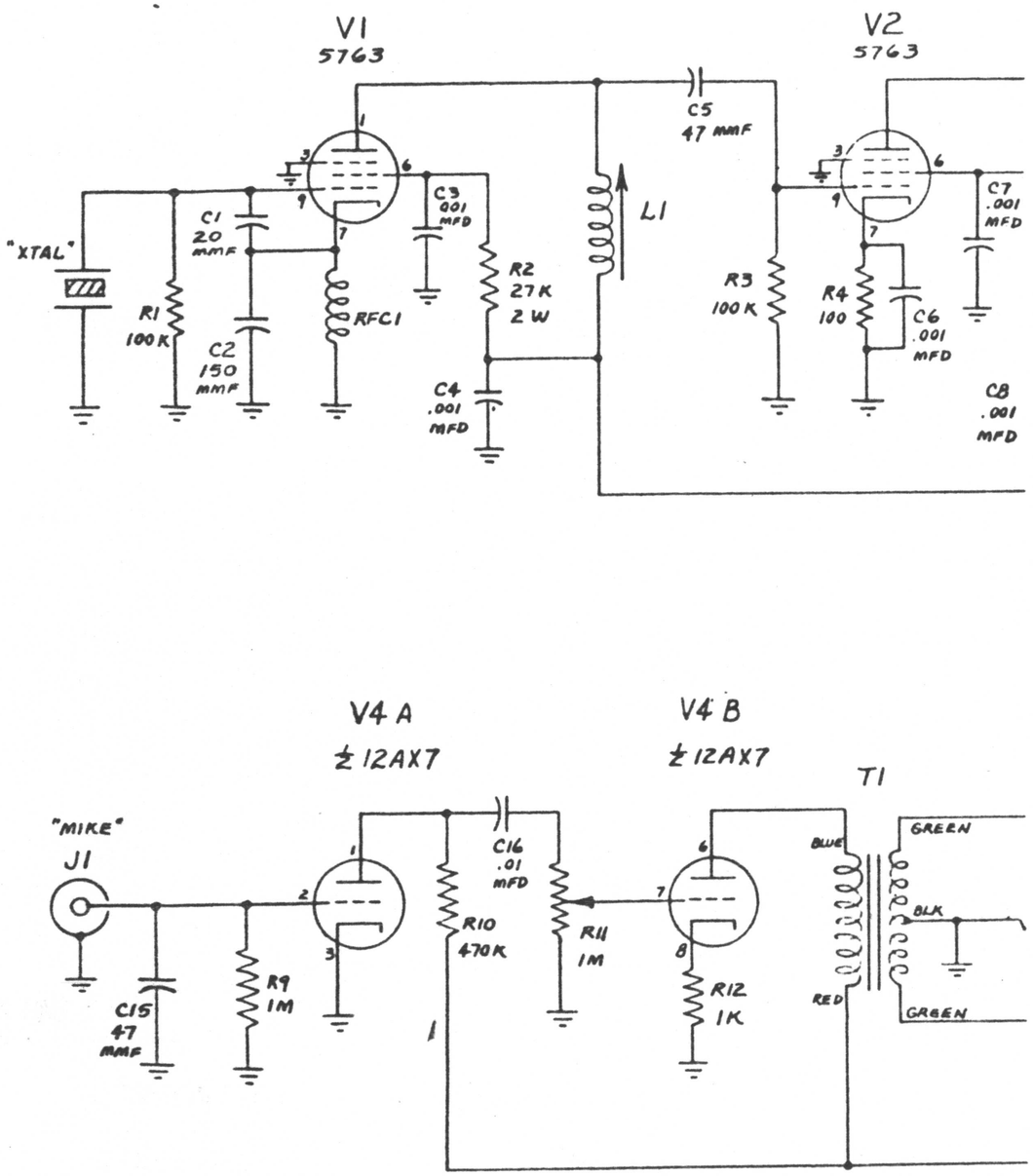

Fig. 8-2. Schematic of

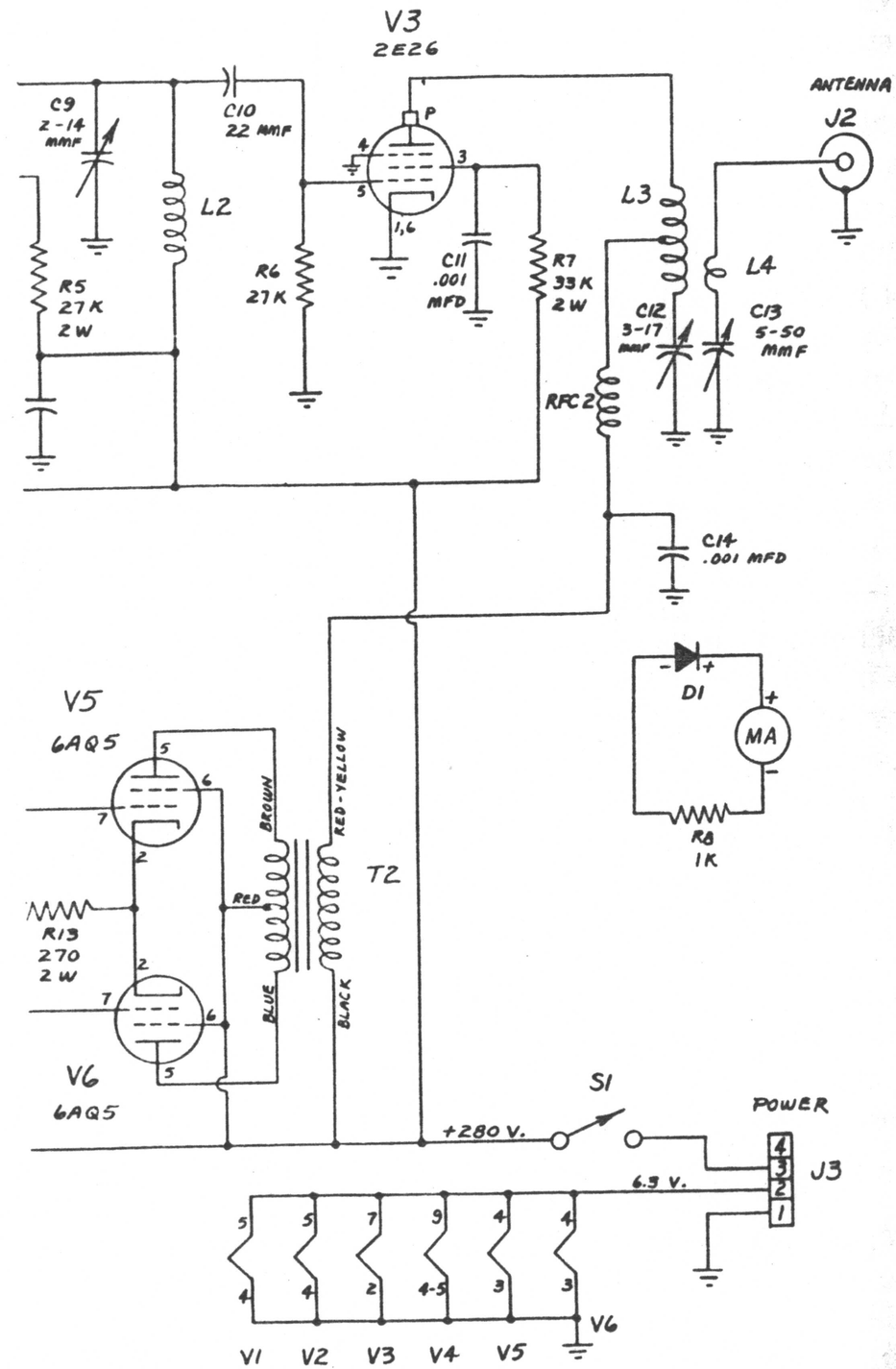

the 2-meter phone transmitter.

suited for mobile operation, being easily mounted under the dash of the auto. Any number of schemes for supplying power can be used for mobile operation. For instance, a dynamotor, vibrator supply, or transistorized d-c to d-c converter may be employed. In any case, the supply should be capable of delivering approximately 250 to 300 d-c volts, at currents of 150 to 200 ma. For fixed-station operation, tubes with 6-volt filaments, powered by the 6-volt winding in the power transformer are employed. Naturally, if your automobile has a 6-volt ignition system, the tubes can be powered directly from the auto battery. If your car has a 12-volt system, a direct equivalent tube with a 12-volt filament is specified. More about these substitutions later.

CIRCUIT DESCRIPTION

The schematic diagram of the rig is shown in Fig. 8-2, and one of the a-c power supply is shown in Fig. 8-3. The oscillator (V1) is crystal controlled and is identical to the oscillators used in previous chapters. A standard 8-MHz crystal, or 24-MHz third-overtone type crystal may be used. L1 resonates with the plate capacity of V1 and the

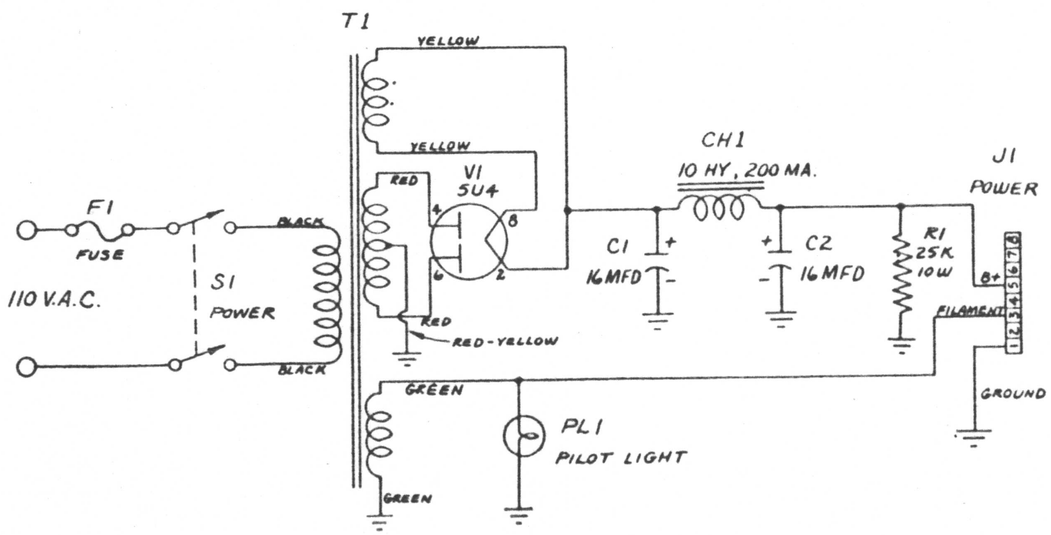

Fig. 8-3. Schematic of the power supply.

grid capacity of V2 to a frequency of 24-MHz. In the case of the 8-MHz crystal, L1 is tuned to the third harmonic, or the oscillator is tripling. When a 24-MHz crystal is used, the oscillator runs "straight through," with L1 still tuned to the 24-MHz frequency.

The oscillator output is capacitively coupled to the grid of V2, which functions as a tripler. The output of V2 is tuned to 72 MHz by L2 and C9. The final amplifier (V3) is a beam-power pentode and also serves as a doubler with an output at 144 MHz. L3 and C12 form a series-resonant tank circuit for V3.

The r-f output from the final stage is link coupled by L4 to the antenna. C13 is used to tune out the reactance of the link.

Tuning the transmitter for maximum output is done independently of the actual circuit. The tuning indicator is actually an untuned field-strength meter, or wavemeter. It consists of a germanium diode (D1) for rectifying the rf, a d-c milliammeter (MA), and a current limiting resistor (R8). The component leads are left long, and soldered to form a closed loop. This closed loop, being in proximity with the final tank circuit, picks up the r-f energy, rectifies it, and indicates the relative output on the meter. In operation, C12 and C13 are both tuned for maximum meter indication.

V4 serves as a microphone preamplifier for the modulator section. This circuit provides enough gain to allow a crystal mike to be employed for fixed-station operation. However, since a crystal mike is very delicate, a dynamic mike should be used for mobile operation. Either type of microphone will work in the circuit. The push-pull, modulator-output stage consists of V5 and V6.

The power supply (Fig. 8-3) is conventional. V1 serves as a full-wave rectifier working into a pi-type filter consisting of C1, C2, and CH1. The bleeder resistor (R1) keeps the output voltage from surging to a high value when the load is removed. It also discharges the capacitors when there is no load on the supply, and the power is on.

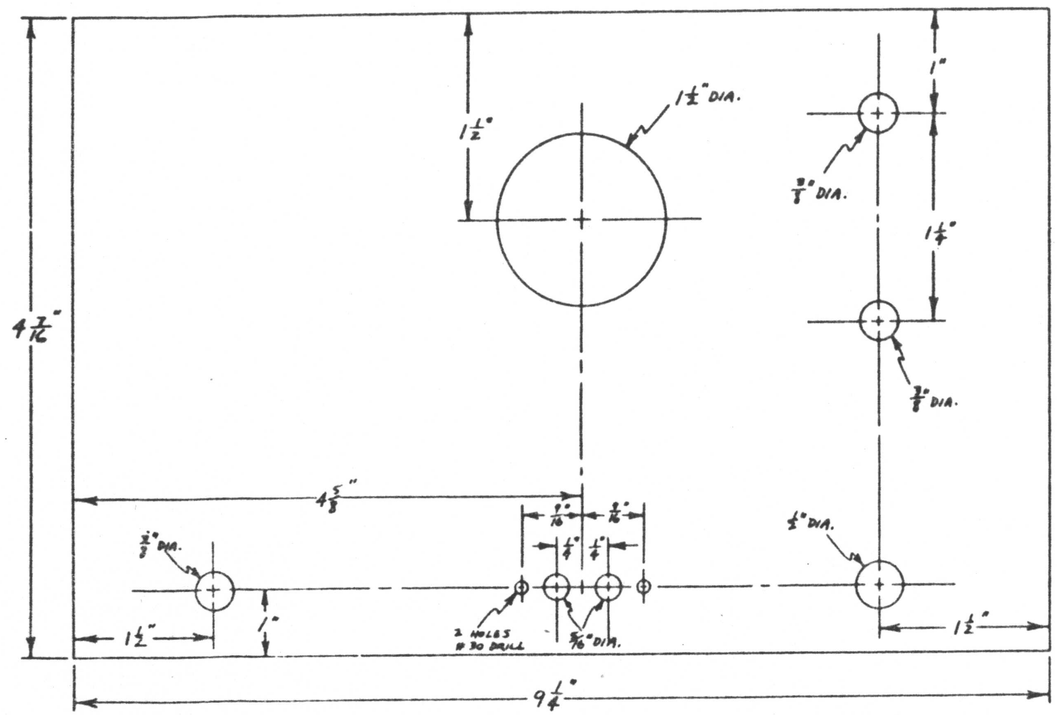

Fig. 8-4. Hole-location drawing of the front panel.

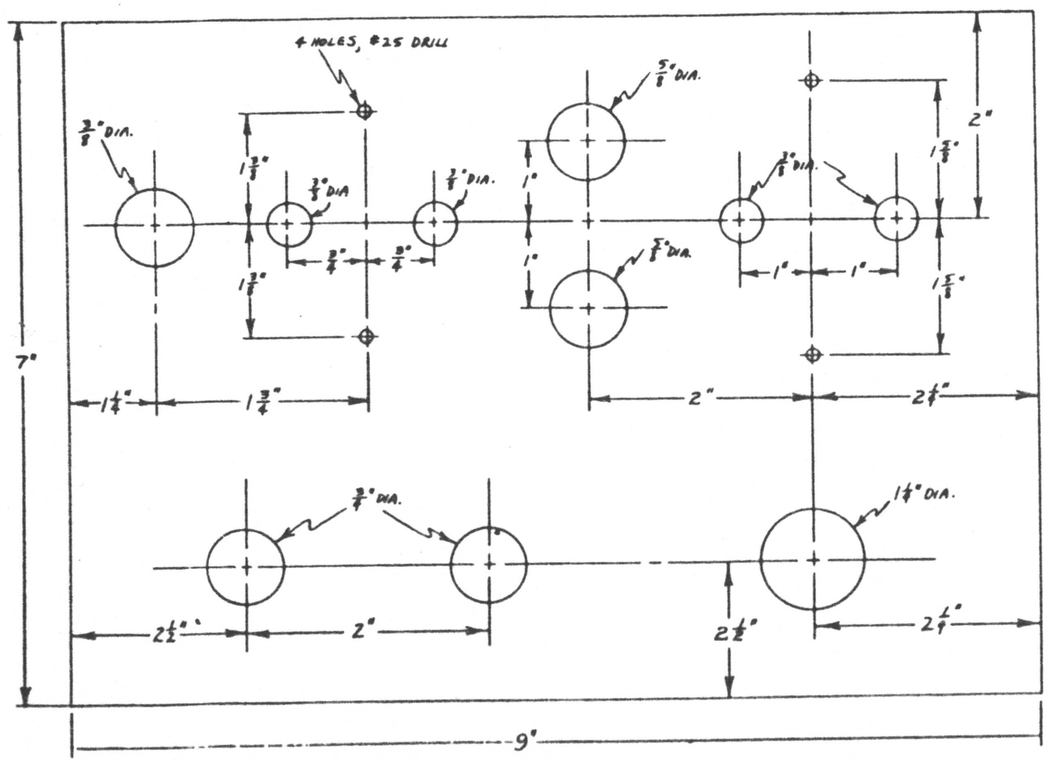

Fig. 8-5. Hole-location drawing of the chassis.

CONSTRUCTION

The hole-location drawing for the front panel is given in Fig. 8-4, while the one for the top of the chassis is Fig. 8-5 and for the rear apron of the chassis in Fig. 8-6.

The transmitter is packaged in an enclosure measuring 4-7/16" × 9¼" × 7¼" and an aluminum chassis measuring 7" × 9" × 1½". The tube socket for V3 is

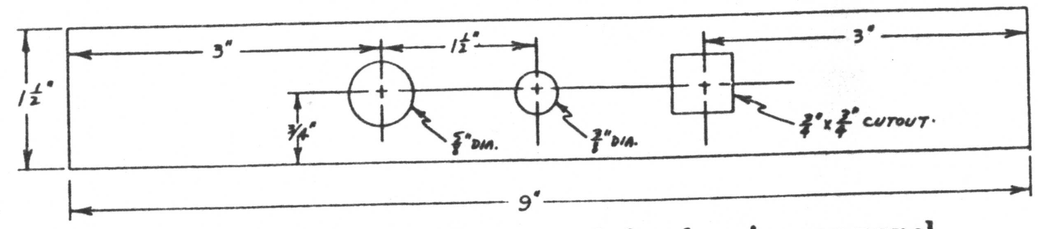

Fig. 8-6. Hole-location drawing of the chassis rear panel.

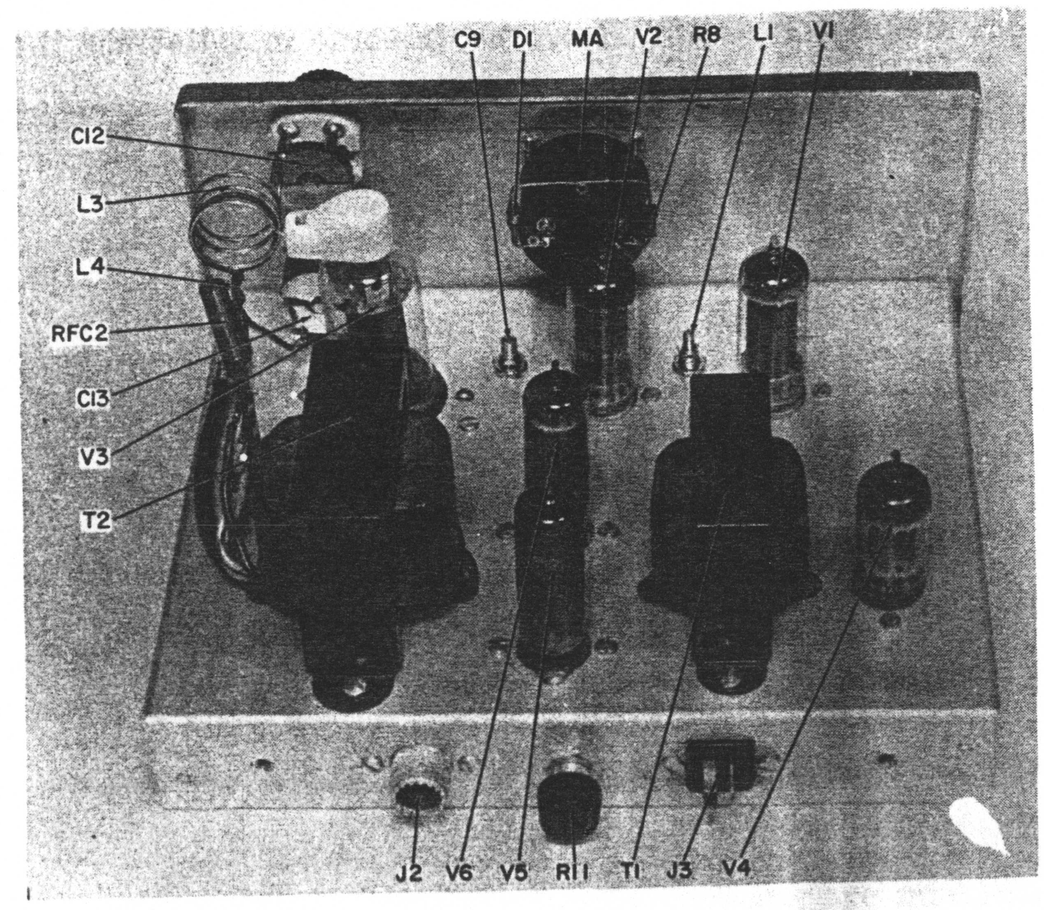

Fig. 8-7. Inside top chassis view of the transmitter.

recessed approximately ½ inch below the chassis. The photos in Figs. 8-7 and 8-8 show the location of all the components, both above and below the chassis. The layout of the front panel is shown in Fig. 8-9. When wiring the r-f section of the transmitter, keep the component leads as short as possible and use direct, point-to-point wiring; this is very important at vhf frequencies. The wiring of the modulator and power supply is not critical. The power supply is connected to the transmitter with an interconnecting cable made by twisting together three 24″ lengths of heavy hook-up wire and connecting the plug and socket to the ends.

A piece of shielded wire should be run from the mike jack (J1) to the grid of V4. This is a fairly long run, and shielded wire is recommended. C15 is an r-f bypass capacitor; it is needed to keep any stray r-f energy out of the modulator circuit. However, in some installations this

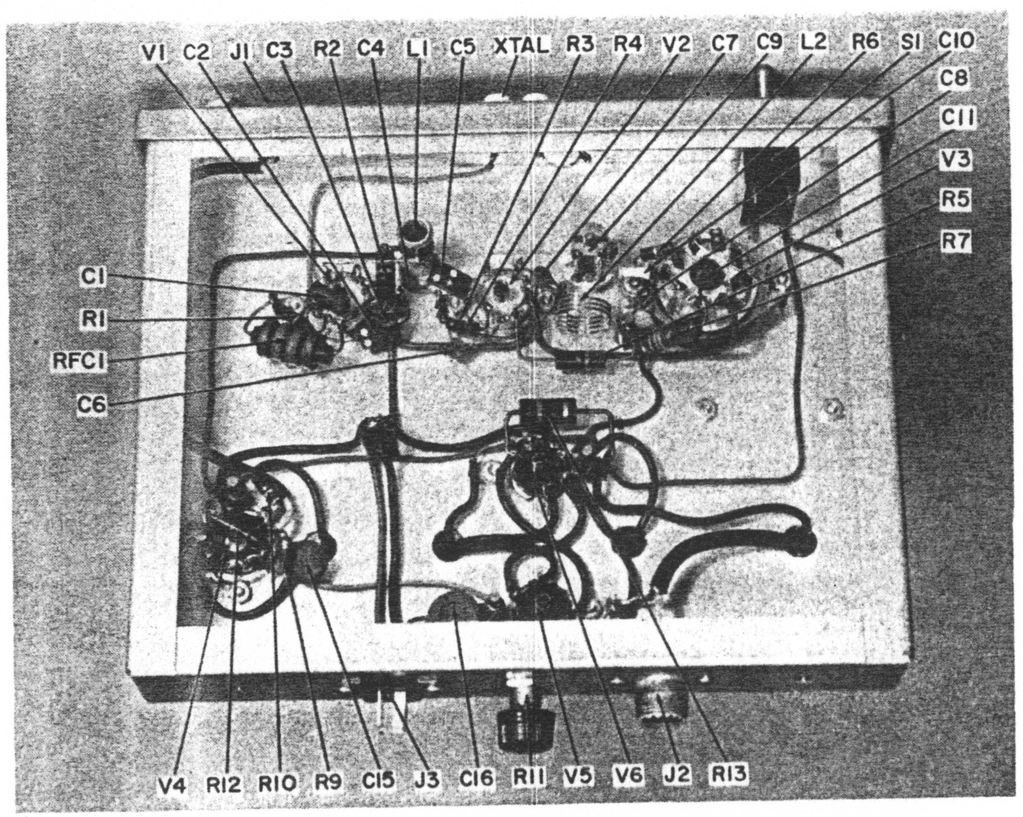

Fig. 8-8. Bottom view of the transmitter.

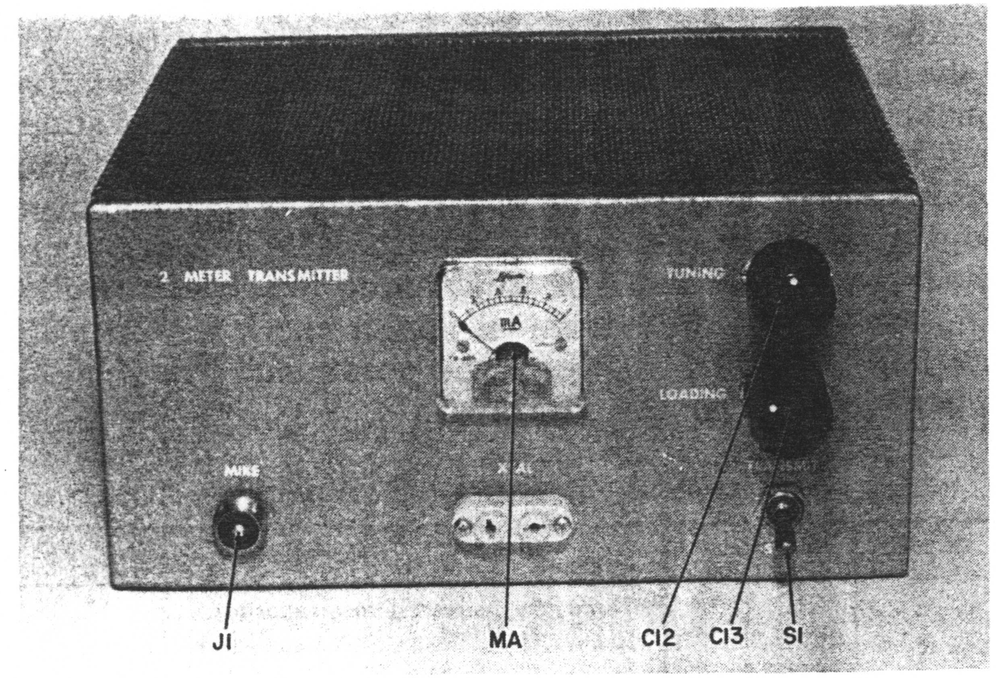

Fig. 8-9. Close-up view of the front panel.

bypass capacitor may not be adequate and it may be necessary to insert a 2.5-mH r-f choke in series with the shielded line at the mike jack.

A piece of RG-58 coax is used to connect link coil L4 to antenna jack, J2. RG-58 is small diameter 52-ohm coax.

As mentioned previously in this chapter, the tubes specified for this unit have 12-volt filament equivalents. The 5763 can be replaced by a 6417 for 12-volt operation, the 2E26 by a 6893, and the 6AQ5 by a 12AQ5. These substitutions require no wiring changes. However, V4, the 12AX7, has a split filament for either 6-volt operation or 12-volt operation. The wiring configuration in the schematic diagram shows the filament hooked up for parallel or 6-volt operation. If the rig is to be used in a 12-volt system, it will be necessary to change the wiring of the 12AX7 filament. This is done very simply. Pin 9 on the tube is the center tap; for 12-volt operation no connections are made to this pin and connections are made to pins 4 and 5 only.

OPERATION

Aligning the transmitter is a relatively easy task. The coils should be checked and set to their operating frequencies first with the aid of a grid-dip meter. The stages can then be peaked with a wavemeter or by monitoring with a receiver (with the power turned on). The output tuning indicator can also be used to peak the stages preceeding the final amplifiers, by tuning for a peak reading on the meter. A cross-town on-the-air check with another station is best for checking the optimum setting of the modulator gain control (R11).

TRANSMITTER PARTS LIST

Quantity	Item No.	Description
1	C1	20-mmf, 5%, silvered-mica capacitor.
1	C2	150-mmf, 5%, silvered-mica capacitor.
7	C3, C4, C6, C7, C8, C11, C14	.001-mfd GMV, 1000V, disc-ceramic capacitors.
1	C5	47-mmf, 5%, 500V, silvered-mica capacitor.
1	C9	2-14—mmf, miniature variable capacitor (Johnson 160-107 or equiv.).
1	C10	22-mmf, 10%, 1000V, disc-ceramic capacitor.
1	C12	3-17—mmf variable capacitor (Johnson 157-2 or equiv.).
1	C13	5-50—mmf variable capacitor (Johnson 157-4 or equiv.).
1	C15	47-mmf, 10%, 1000V, disc-ceramic capacitor.
1	C16	.01-mfd GMV, 1000V, disc-ceramic capacitor.
2	R1, R3	100,000-ohm, ½-watt, 10%, carbon resistor.
2	R2, R5	27,000-ohm, 2-watt, 10%, carbon resistors.
1	R4	100-ohm, ½-watt, 10%, carbon resistor.
1	R6	27,000-ohm, ½-watt, 10%, carbon resistor.
1	R7	33,000-ohm, 2-watt, 10%, carbon resistor.
2	R8, R12	1000-ohm, ½-watt, 10%, carbon resistors.
1	R9	1-megohm, ½-watt, 10%, carbon resistor.
1	R10	470,000-ohm, ½-watt, 10%, carbon resistor.
1	R11	1-megohm potentiometer.
1	R13	270-ohm, 2-watt, 10%, carbon resistor.
1	L1	1.5 to 3.2 μH coil. (Miller 4404 or equiv., or 12¼ turns of No. 26 enameled copper wire close-wound on ⅜" slug-tuned coil form).

TRANSMITTER PARTS LIST—Cont'd

Quantity	Item No.	Description
1	L2	3 turns No. 20 tinned-copper wire, wound ⅝" diameter, spaced to 3/16" length, or cut from Air Dux 516T or B & W 3007 or equiv. coil stock.
1	L3	3 turns No. 16 tinned-copper wire, wound 1" diameter, spaced to ¾" length, center-tapped.
1	L4	1-turn link of small hook-up wire wound around center of L3.
1	RFC1	2.5 μH r-f choke (Miller 4666, National R-50, or equiv.).
1	RFC2	7.0 μH r-f choke (Ohmite Z-50 or equiv.).
1	T1	Driver transformer (Triad A-85X or equiv.).
1	T2	Modulation transformer (Triad M-6X or equiv.).
1	S1	Spst toggle switch.
1	Xtal	8- or 24-MHz crystal.
1	D1	1N34 or 1N38 germanium diode.
2	V1, V2	5763 (6V) or 6417 (12V) pentode tubes.
1	V3	2E26 (6-V) or 6983 (12V) output tube.
1	V4	12AX7 dual-triode tube (6 or 12V).
2	V5, V6	6AQ5 (6V) or 12AQ5 (12V) beam power tubes.
1	J1	Microphone connector (Amphenol 75PC1M or equiv.).
1	J2	Coaxial chassis receptacle SO-239 (Amphenol 83-1R or equiv.).
1	J3	Four-connector chassis-mounting plug (Cinch-Jones P-304 or equiv.).
1	MA	0-1 ma d-c miniature milliammeter (Lafayette TM-400 or equiv.).
1		Crystal socket (Millen 33102 or equiv.).
2		Knobs (National Type HR or equiv.).
1		4-7/16" × 9¼" × 7¼" cabinet including 9" × 7" × 1½" aluminum chassis (California chassis LTC-464 or equiv.).
1		Plate cap for 2E26 tube.
1		Ceramic octal tube socket.
2		Ceramic 9-pin miniature tube socket.
1		Bakelite 9-pin miniature tube socket.
2		Bakelite 7-pin miniature tube socket.
2		½" spacers for V3 socket mounting.
		6-32 machine screws and nuts.
		4-40 machine screws and nuts.
		Hook-up wire.
		Solder.

INTERCONNECTING CABLE PARTS LIST

Quantity	Item No.	Description
1		Octal connector plug (Amphenol 86-PM8 or equiv.).
1		4-pin cable socket with clamp (Cinch-Jones S-304 or equiv.).
3		24" lengths of heavy wire twisted together to form 1 cable.

POWER SUPPLY PARTS LIST

Quantity	Item No.	Description
2	C1, C2	16-mfd, 450VDC, electrolytic capacitors.
1	R1	25,000-ohm, 10-watt, wirewound resistor.
1	CH1	10 henry, 200 ma, d-c choke (Merit C-3181 or equiv.).
1	T1	Power transformer—Secondaries: 280-0-280 VAC @ 200 ma; 6.3 VAC @ 8A; 5VAC @ 3A (Merit P-2842 or equiv.).
1	S1	Dpst toggle switch.
1	F1	2-amp fuse.
1	PL1	No. 47 bayonet-base 6.3V pilot lamp.
1	V1	5U4G rectifier tube.
1	J1	Octal socket (Amphenol 78-S8 or equiv.).
1		7" × 9" × 2" aluminum chassis.
1		Fuse holder.
1		Octal tube socket for V1 (Amphenol 78-S8 or equiv.).
1		Pilot-light assembly (E.F. Johnson 147-306-2 or equiv.).
1		A-c power cord (length as required).
1		A-c power plug.
		6-32 machine screws and nuts.
		Hook-up wire.
		Solder.

350
.120
7000
350
42,000

.120
400
48,000 watts