ALTEC SERVICE COMPANY

MOTIOGRAPH SOUND EQUIPMENT BULLETIN

MAY 25, 1957

ISSUE #2 part 1 of 2

Scanned by Patrick Jankowiak KD5OEI

What's in here?
The Altec Service Company was a branch of Altec in the busines of servicing all kinds of movie theater audio and film gear. This is but one of many volumes concerning this work. It is invaluable for anyone seeking more knowledge of old-time high fidelity sound reproduction systems made from the 1930's to the 1950's. This includes Schematics, Factory mods, Factory upgrades, Setup instructions, Confidential Field Bulletins, and other generally unpublished information not available anywhere else

What does it pertain to?
According to the table of contents…

Amplifiers	- some 15 different models, several WE, a couple high power.
Baffles	- at least 6 kinds
Control Cabinets	- three, plus variants
Horns	- two kinds of HF horns
Loudspeakers	- fourteen varieties comprising several theater systems
Motors	- two kinds of projector motors
Networks	- three. These adjust the characteristics for the entire system. This is often overlooked or misunderstood by WE fans today.
Power Units	- eight kinds of power supplies
Reproducers	- these get the audio off the film and have their own characteristics.
Switching Panels	- three variants
Systems	- nine types
Transformers	- The SE-7040
Transmission Data	- EQ methods and curves that may be of use.

What kinds of equipment?
Many Western Electric and several less-known but fine other kinds (Bogen etc). Simplex Projectors – as these are after all where the movie sound comes from!

What is the resolution?
300DPI

Dedication:

This scan is dedicated to peace, spiritual and military strength, the rights of individuals to bear arms, and to assemble, speak the truth openly, and worship freely, and to goodwill among all truly God-fearing peoples.

None of these are mutually exclusive in a free society.

6-6-57

MOTIOGRAPH

SOUND EQUIPMENT BULLETIN

INDEX

EQUIPMENT	PAGE NO.
AMPLIFIERS	
87-E, Schematic	5030.11
87-E, Wiring Diagram	5030.12
118-A	5030.51
118-A, Gain Control Adjustment	5385.41
118-A, Schematic	5030.55
118-A, Wiring Diagram	5030.56
PA-7501, Schematic	5031.11
MA-7502, Schematic	5031.12
PA and MA-7505	5031.51
PA-7505, Schematic	5031.61
PA-7505, Wiring Diagram	5031.62
MA-7505, Schematic	5031.63
MA-7505, Wiring Diagram	5031.64
PA and MA-7505, Tube Socket Meter Readings	5031.51
PA and MA-7505-A	5032.01-.05
PA-7505-A, Wiring Diagram	5032.12
PA-7505-A, Schematic	5032.09
MA-7505-A, Schematic	5032.15
MA-7505-A, Wiring Diagram	5032.14-2
MA-7505-T, Schematic	5032.25
7505-A, Equalization Curves, LSS-7540	5032.21
PA and MA-7505-A, Tube Socket Meter Readings	5032.09 5032.15
SE-7628 Suppressor Amplifier	5034.71-.72
RSE-7628 - Schematic	5034.75
TA-7466 Type	5034.01
TA-7466A Schematic	5034.11
TA-7466A Wiring Diagram	5034.12
Amplifiers, Modification, TA-7466 to TA-7466-A	5034.01
TA-7466-TA-7466-A, Tube Socket Meter Readings	5034.01
TA-7467	5034.51-.52
TA-7467A, Schematic	5034.61
TA-7467A, Wiring Diagram	5034.62
Modification, TA-7467-A to TA-7467	5034.51
TA-7467-TA-7467-A, Tube Socket Meter Readings	5034.51
TA-7466-TA-7466-A and TA-7467-TA-7467-A Transmission Data	5034.52
BAFFLES	
TA-7396	5385.23
TA-7397	5385.33
TA-7396 and TA-7397, Photo WE-7552	5220.51
SE-7037	5220.11
SE-7019 and SE-7019-A	5220.21
CONTROL CABINETS	
PA-7015 and PA-7016 Aux. Cont., Ass'y	5150.11
PA-7500 (TA-7468 and TA-7469 Aux. Cont.), Assembly	5150.13
PA-7500 (TA-7468 Auxiliary Cont.), Schem. and W. D.	5150.14
PA-7500 (TA-7468), Dial Markers (Separate 8-1/2 x 11 sheet)	AP-1504

EQUIPMENT	PAGE NO.
HORNS	
SE-7029 (HF)	5220.11
SE-7016 (HF)	5220.21
LOUDSPEAKERS	
SE-7501 Monitor Replacement Parts	5385.51
L.S. Unit, SE-7034 (LF)	5220.11
L.S. Unit, SE-7020 (LF)	5220.21
L.S. Unit, SE-7015 (HF)	5220.11
L.S. System, TA-7396 Baffle, SE-7049 LF Speaker, SE-7016 HF Horn, SE-7015 HF Unit	5385.23
L.S. System, TA-7397 Baffle, SE-7034 LF Speaker, SE-7016 or SE-7034 HF Horn, SE-7015 HF Unit	5385.33
L.S. System, SE-7508	5220.11-.13
L.S. System, SE-7511	5220.21-.24
L.S. System, SE-7522	5220.31-.34
MOTORS	
General	5250.1
SH-2673	5250.11-2
SH-7070	5250.15
NETWORKS	
SE-7018, Characteristics	5220.21
SE-7018, Schem. & Wiring Diagram	5210.11
SE-7038, Characteristics	5220.11
SE-7038, Schem. & Wiring Diagram	5210.12
TA-7473, Schem. & Wiring Diagram	5210.21
POWER UNITS	
TA-4144-A, Adjustments	5385.32
TA-4144-A, Schematic	5310.11
TA-4144-A, Wiring Diagram	5310.12
TA-7471, Adjustments	5385.32
TA-7471, Schematic	5311.11
TA-7471, Schematic	5311.12
PU-7500, Assembly	5312.11
PU-7500, Wiring Diagram	5312.12
PU-7502, Schematic	5312.13
PU-7502, Wiring Diagram	5312.14
SE-7075, Auxiliary	5313.03
SE-7520	5313.01
SE-7520, Schem. and Wiring Diagram	5313.02
SE-7520, Addendum #1	5312.99
SE-7570-A, Schem. and Wiring Diag.	5313.07
SE-7570 Exc. Lamp P.U.	5313.04-.06
SE-7570-D, Schem. & Wiring Diag.	5313.09

Issued by
Engineering Department
Printed in U. S. A.

Issue #2

MOTIOGRAPH

INDEX SOUND EQUIPMENT BULLETIN

EQUIPMENT	PAGE NO.
REPRODUCERS	
AAA - Magnetic	5351.41-.52
Addendum #1	5351.53-.54
HU, K, MK	5350.11
MK, Photos	5350.13-.18
MK, Parts List	5350.19-.20
SH-7500, Installation Notes	5351.01-.04
Adapter Plates	5351.01
Assembly, WE-7521	5351.35
Cleaning	5351.03
Drive Sprocket Assemblies	5351.01-.02
Film Threading Diagram, WE-7507	5351.37
Impedance Roller Assembly, RSH-7003	5351.39
Lens Tube Adjustment	5351.03-.04
Lubrication	5351.03
SH-7005 & SH-7006, Pad Roller Adj.	5351.02-.03
Parts List, WE-7522	5351.21-.24
P.E.C. Bracket, Assembly WE-7529	5351.36
Photo, WE-7553	5351.31
Photo, WE-7550	5351.32
Push-Pull Modification	5351.03-.04
Push-Pull Modification - Schem. and Wiring Diagram, WE-7554	5351.40
Schematic & Wiring Diag. WE-7506	5351.38
Sound Head Support Brackets	5351.01
Take-Up Assemblies	5351.01
Transmission Data	5034.52
SWITCHING PANEL	
SE-7512 (M-10 Dual Systems)	5385.12
SE-7512 (M-14A and M-15A Systems)	5385.32
SE-7512 (M-17 Systems)	5385.41
SE-7512, Schematic and Wiring Diag.	5270.11
SE-7512, Repairs and Replacement	5270.09
SYSTEMS	
Components	5380.01
M-7, M-9, M-9A, M-9 Dual, Installation Notes & Transmission Data	5385.01-.02
9 Type, 3-Machine Operation	5385.05 to 5385.06.1
M-10, M-10 Dual, Installation Notes and Transmission Data	5385.11-.13
M-11, M-11 Dual, M-13A, Installation Notes and Transmission Data	5385.21-.23
M-13, Schematic	5385.29
M-13A, Schematic	5385.30
M-14A and M-15A, Installation Notes and Transmission Data	5385.31-.34
M-14A and M-15A, Schematic	5385.39
M-17, Installation Notes	5385.41
M-9B, M-911 and M-911 Dual, Installation Notes	5385.51-.52
General, RG-62-U Coaxial Cable	5380.03
TRANSFORMERS	
SE-7040, Impedance Matching	5220.32

EQUIPMENT	PAGE NO.
TRANSMISSION DATA	
Exciter Lamp - Relative Sensitivity -	Refer to E. B.'s, Systems
Transmission Data -	Refer to E. B.'s, Systems and Reproducers
PA and MA-7505-A Amplifiers	5032.21
TA-7466/TA-7466-A and TA-7467/TA-7467-A Amplifiers	5034.52

Issued by
Engineering Department
Printed in U. S. A.

87-E AMPLIFIER

ISSUE:		APP'D
1551	11-1-40	WWS

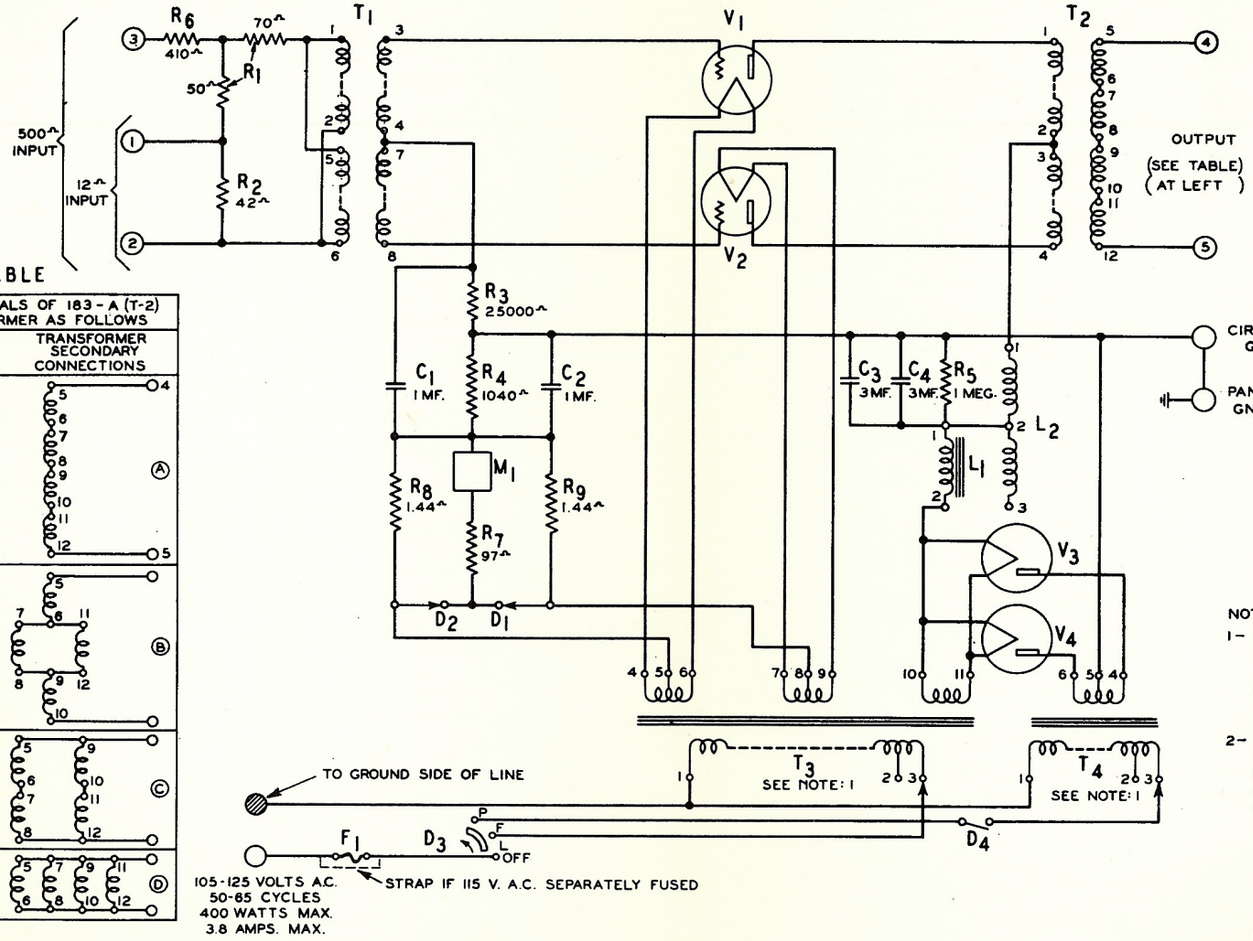

TABLE

STRAP TERMINALS OF 183-A (T-2) OUTPUT TRANSFORMER AS FOLLOWS		
AMPL. OUTPUT IMPED.	RECOMENDED LOAD IMPEDANCE	TRANSFORMER SECONDARY CONNECTIONS
12Ω	25Ω TO 48Ω	(A)
6.75Ω	13.0Ω TO 25Ω	(B)
3Ω	6Ω TO 13.0Ω	(C)
0.75Ω	1.5Ω TO 3.5Ω	(D)

✱ INDICATES NON COMPONENT ITEM WHICH MUST BE ORDERED SEPARATELY.

DESIG.	APPARATUS
✱ V1, V2	284-D VACUUM TUBE
✱ V3, V4	249-B VACUUM TUBE
R1	19-DL RESISTANCE
R2	I.R.C. RESISTANCE 42Ω ±5% TYPE EM WITH #2 TERMINALS.
R3	I.R.C. RESIS. 25,000Ω ±10% TYPE BT-2
R4	I.R.C. RESISTOR 1040Ω ±5% TYPE HY WITH #3 TERMINALS
R5	I.R.C. RESISTOR TYPE F3, 1 MEG., 3 WATTS, 1200 VOLTS NORMAL.
R6	I.R.C. RESISTOR 410Ω ±5% TYPE EN WITH #2 TERMINALS.
R7	D-97714 RESISTANCE
R8, R9	D-97989 RESISTANCE
L1	240-B RETARDATION COIL
L2	D-95796 RETARDATION COIL
T1	D-95658 INPUT TRANS.
T2	183-A OUTPUT TRANS
T3	352-Y TRANS.
T4	353-D TRANS.
C1, C2	229-C CONDENSER
C3, C4	296-A CONDENSER
F1	4306 CLEARSITE PLUG FUSE, 6 AMP.
D3	80178 H & H SWITCH WITH BLACK KNOB.
D4	21808-F H & H SWITCH
D1, D2	3592-M H & H MOMENTARY SWITCH NORMALLY CLOSED
M1	KS-7535 WESTINGHOUSE MILLIAMETER (0-150%) SCALE)

NOTES:

1- CONNECTIONS, AS FURNISHED, TO TERMINALS 1 & 3 OF T_3 & T_4 ARE FOR LINE VOLTAGES AVERAGING BETWEEN 115 AND 125 VOLTS. FOR LINE VOLTAGES AVERAGING BETWEEN 105 AND 115 VOLTS CONNECT TO TERMINALS 1 & 2 OF T_3 & T_4. ⊘ DENOTES GROUND SIDE OF LINE.

2- DIMENSIONS - 19¼" H x 19" W x 12¾" D
WEIGHT - 141 LBS.
MOUNTS ON - AMPLIFIER RACK
GAIN (DB) 9.5 (FROM 86 AMPL.), 8.9 (FROM 500Ω), 11.2 (FROM 12Ω).
OUTPUT (MAXIMUM) - 200-5000 CYCLES - 53 WATTS (39.5 DB)
50 CYCLES - 50 WATTS (39.2 DB)
2% TOTAL HARMONIC
NOISE LEVEL (BELOW .006 WATT UNWEIGHTED)
- 30 DB (AVERAGE) IF USED ALONE
- 20 DB (AVERAGE) IF USED WITH 1086 AMPL. SET FOR 78 DB GAIN.
FINISH - ALUMINUM GRAY

3- B-87-A, 87-C OR 87-E AMPLIFIERS MAY BE OPERATED IN PARALLEL WITH EACH OTHER (BOTH INPUT AND OUTPUT), BUT NOT WITH AN 87-A AMPLIFIER.

4- ORDER REPLACEMENT PARTS PER WIRING DIAGRAM AASR-4549.

SUPERSEDES 87-C AMPLIFIER

AASR-4549 CIRCUIT LABEL

ASSOCIATED DRAWINGS

87-E AMPLIFIER

SCHEMATIC

ALTEC SERVICE CORPORATION, N.Y.

DRAWN BY	DATE	APP'D
CHECKED BY	DATE	WWS 11-1-40

SCALE

AASO-8518

PRINTED IN UNITED STATES OF AMERICA

5030.12

87-E AMPLIFIER

87E AMPLIFIER

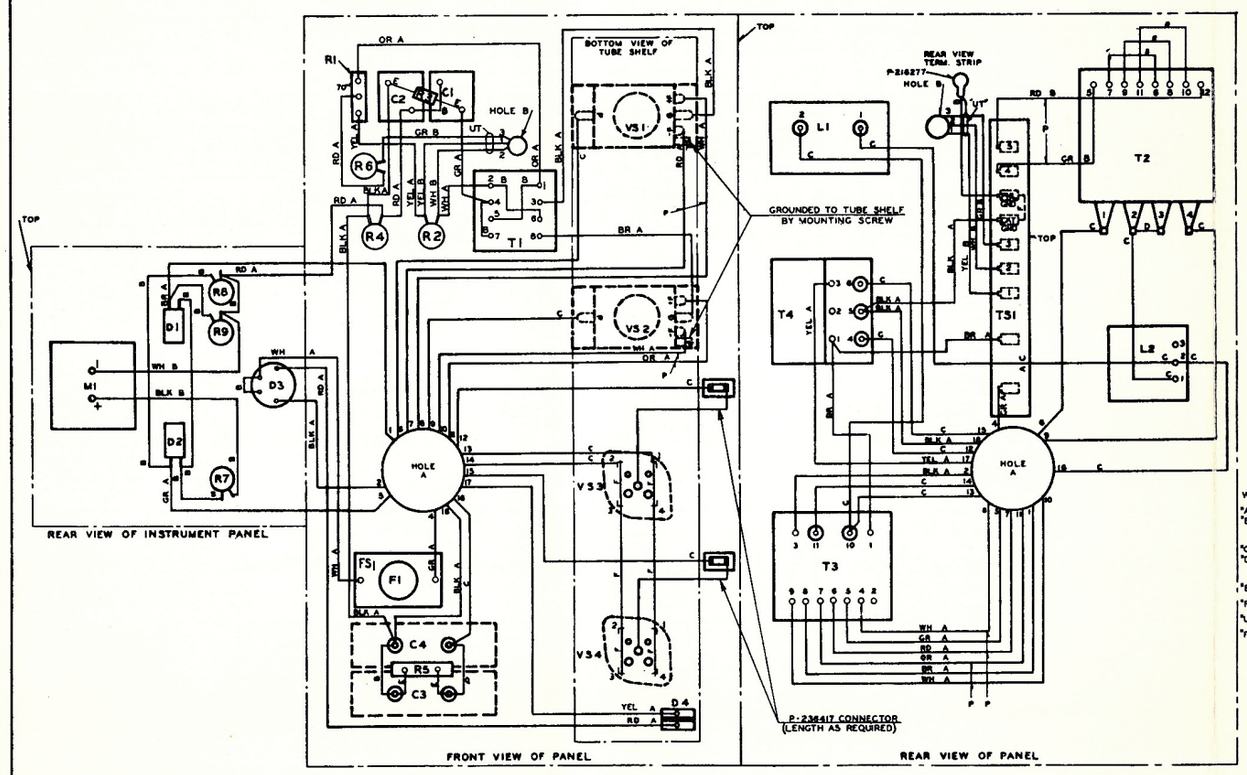

DESIG.	APPARATUS
C1,C2	228 C CONDENSER
C3,C4	296 A CONDENSER
D3	80178 H. & H. SWITCH WITH BLACK KNOB
D4	21806-F H & H SWITCH
D1, D2	3592M H&H SWITCH NORMALLY CLOSED
F1	4306 CLEARSITE PLUG FUSE, 8 AMP.
L1	240B RETARD COIL
L2	D-95796 RETARD COIL
M1	K3-7528 WESTINGHOUSE MILLIAMMETER
R1	MDL RESISTANCE
R2	IRC RESISTOR 48Ω ±5% TYPE EM WITH Ø2 TERMINALS (20 WATTS)
R3	IRC. RES15. TYPE BTZ, 25000Ω ±10% 2 WATTS
R4	IRC. TYPE HY RESISTOR 1040Ω ±5% WITH Ø3 TERMINALS (65 WATTS)
R5	I.R.C. RESISTOR TYPE F3, 1 MEG., 3 WATTS, 1200 VOLTS
R6	IRC. RESISTOR 410Ω ±5%, TYPE EM WITH Ø2 TERMINALS (40 WATTS)
R7	D-97714 RESISTANCE
R8 R9	D-97989 RESISTANCE
T1	D-95858 INPUT TRANSFORMER
T2	183A OUTPUT TRANSFORMER
T3	352Y TRANSFORMER
T4	353D TRANSFORMER
VS1, VS2	148-A V.T. SOCKET
VS3,VS4	142-A V.T. SOCKET
TS1	ESO-822741-1
FS1	62589 BRYANT PLUG FUSE CUTOUT BASE

LEGEND

WIRES MARKED:

"A"- IN CABLE #1 / "B"- OPEN FORMED } #16 AWG SOLID WIRE PER KS-7812, BLACK, UNLESS OTHERWISE SPECIFIED.

"C"- IN CABLE #1 / "D"- OPEN FORMED } #14 AWG COPPER WIRE, 7 STRANDS, 5/64" WALL, VARNISHED CAMBRIC, WEATHERPROOFED COTTON BRAID. (SIMPLEX CABLE #1042)

"E" ARE FURNISHED WITH APPARATUS.

"P" ARE PAIRED.

"UT" ARE SHIELDED TRIPLES, SHIELDED PER M-19089.

"F" ARE #14 TINNED COPPER WIRE.

NOTES:
1- STRAP OUT F-1 IF 115 V.A.C. SUPPLY IS SEPARATELY FUSED.
2- REMOVE ALL GREASE AND FOREIGN MATERIAL FROM ISOLANTITE TERMINALS AFTER CONNECTIONS HAVE BEEN MADE

TRIMMING LINE

PRINTED IN U.S.A.

AASO-8518 SCHEMATIC
ASSOCIATED DRAWINGS
87-E AMPLIFIER
CIRCUIT LABEL
ALTEC SERVICE CORPORATION
DRAWN BY ____ DATE ____
CHECKED BY ____ DATE ____
APPD WWE 11-1-60
SCALE
AASR-4549

1. DESCRIPTION - The W. E. 118-A Amplifier is a medium gain, high power, two stage, push-pull bridging amplifier.

2. MOUNTING - 19" Relay Rack

3. CHARACTERISTICS -

Gain - 36 db (12 ohm input) (As used with Motiograph Sound Systems)

Volume Control - Continuous - Not calibrated

Impedance - Input 1-25,000 ohms
Output 1-1,000 ohms

Power Output - 50 watts, 39.2 db/.006W - 5% harmonic distortion
25 watts, 36.2 db/.006W - 1% " "

Noise Level -25 db/.006W

Vacuum Tubes - 2 - 6J7 or 6J7G, 4 - 6L6 or 6L6G, 1 - 5Z3

Power Supply Required - 200W, 115V, 60 cycles

Frequency Response - Flat 55-8000 cps

Dimensions - 7-1/4" High, 12" Wide, 18-13/16" Long

Weight - 35 pounds

ASSOCIATED DRAWINGS

ESR-614686	Schematic
ESR-613790	Wiring Diagram

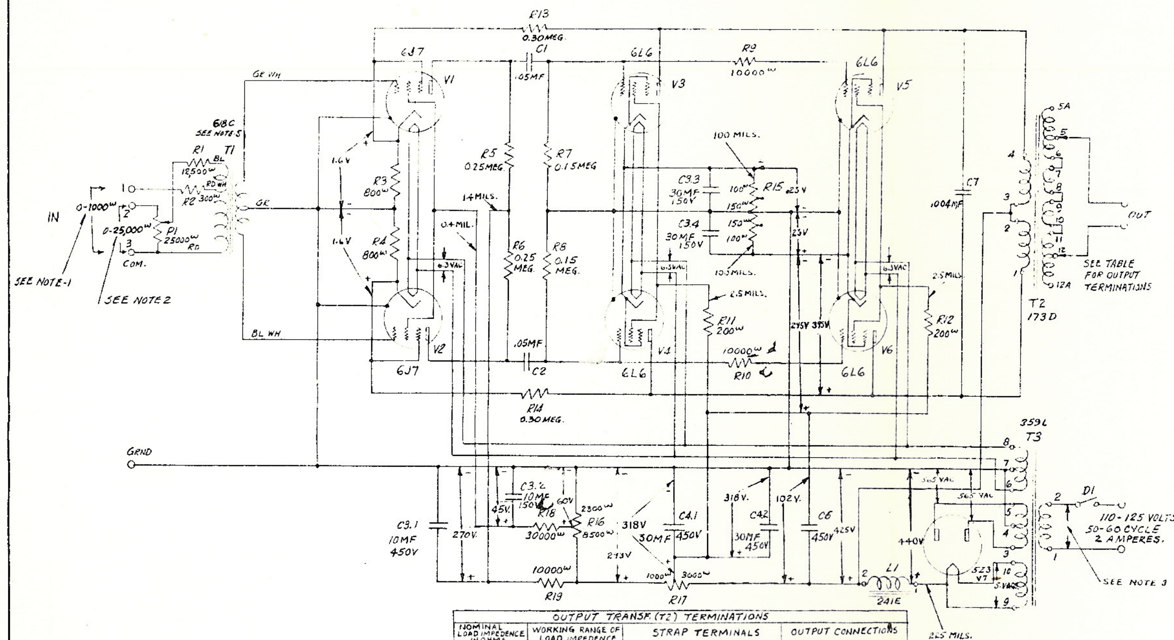

OUTPUT TRANSF. (T2) TERMINATIONS			
NOMINAL LOAD IMPEDENCE IN OHMS	WORKING RANGE OF LOAD IMPEDENCE	STRAP TERMINALS	OUTPUT CONNECTIONS
500	250 TO 1000	6TO7 8TO9 10TO11	5A AND 12A
125	62 TO 250	6TO7 10TO11 5ATO9 8TO12A	5A AND 12A
30	20 TO 62	6TO7 8TO9 10TO11	5 AND 12
17	10 TO 20	7TO9 8TO10 6TO7 10TO11	5 AND 12
7.5	.4 TO 10	6TO7 10TO11 8TO12 5TO9	5 AND 12
2	1 TO 4	5TO7 TO9 TO11 6TO8 TO10 TO12	5 AND 12

NOTES: -

1 - SOURCE IMPEDENCE 0 TO 1000ʷ MAX. GAIN CONNECTION.

2 - SOURCE IMPEDENCE 0 TO 25,000ʷ BRIDGING AMP. CONNECTION.

3 - THE VOLTAGE AND CURRENT VALUES SHOWN ARE FOR A LINE VOLTAGE OF 117-1/2 VOLTS AND A LINE CURRENT OF 1.65 AMPS.

4 - THE VALUES OF CURRENT, VOLTAGE AND RESISTANCE SHOWN ARE AVERAGE VALUES AND ARE INTENDED ONLY AS AN AID IN SERVICING THE AMPLIFIER. READINGS SHOULD BE TAKEN WITH THE EQUIVALENT OF A "VOLT-OHMMETER" WHOSE RESISTANCE IS AT LEAST 1000 OHMS PER VOLT.

5 - THE 618C INPUT TRANS. REPLACES THE 286F INPUT TRANS. PREVIOUSLY SPECIFIED. THE 0.15 MEG. RESISTORS R7 AND R8 REPLACE 0.25 MEG. RESISTORS. NOTE: IT IS IMPORTANT THAT R7 AND R8 BE OF THE SAME VALUE.

ASSEM-ESR-613788
ASSOC. DWG

118A AMPLIFIER

SERVICE SCHEMATIC

SCALE ——

APPROVED: VMC | ENGINEER: JUN

BELL TELEPHONE LABORATORIES, INC. NEW YORK

ESR-614686

5030.56

118A Amplifier

ALTEC SERVICE CORPORATION

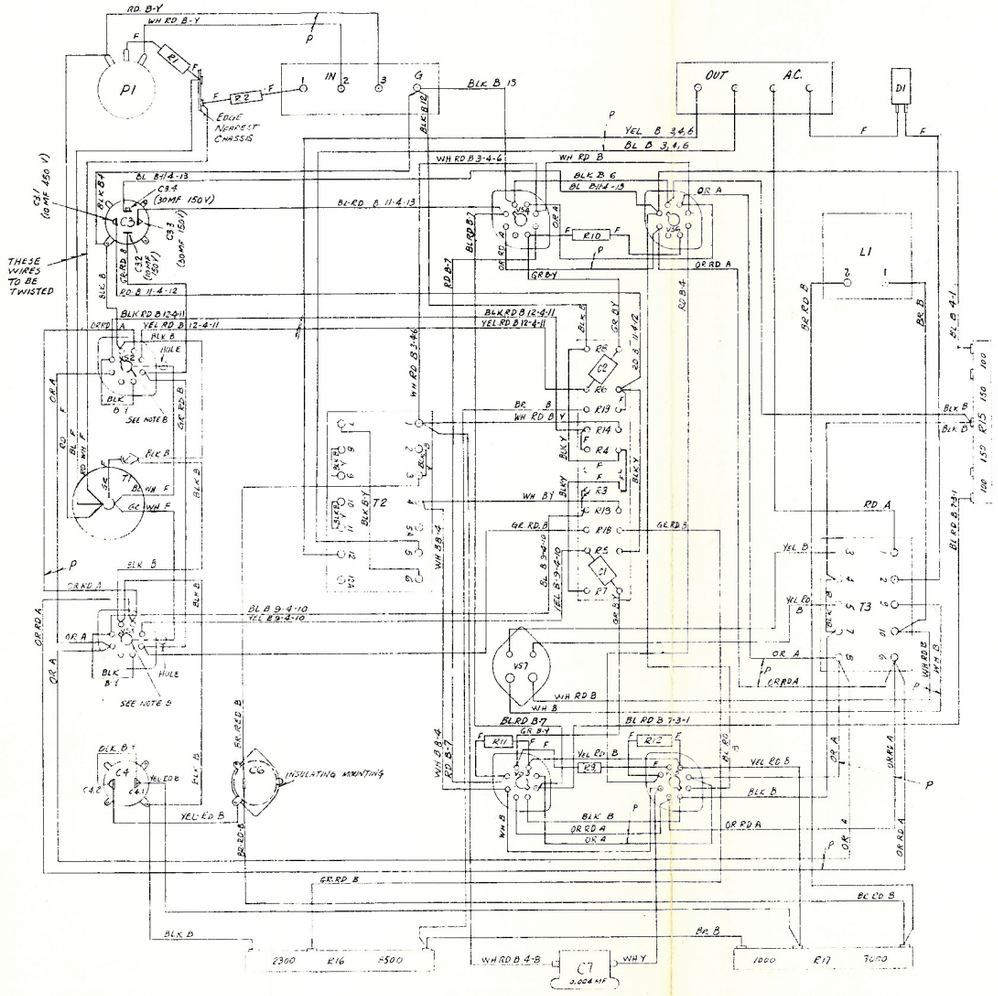

NOTES:

1. WIRES MARKED "A" ARE 18AWG PER ES-7616 SOLID WIRE.
2. WIRES MARKED "B" ARE 22AWG PER ES-7612 SOLID WIRE.
3. WIRES MARKED "P" DENOTE TWISTED PAIR.
4. WIRES MARKED "F" ARE FURNISHED AS PART OF HARNESS.
5. APPARATUS DESIGNATIONS ARE FOR REFERENCE ONLY AND SHALL NOT APPEAR ON APPARATUS.
6. ALL WIRES ARE IN THE CABLE EXCEPT THOSE MARKED Y OR F.
7. NUMBERS FOLLOWING WIRE DESIGNATIONS REFER TO CABLE PATH IN ASSEMBLY DRAWING ESR-613788 AND SHOULD BE RUN AS INDICATED. THE RUN OF WIRES NOT INDICATED BY NUMBERS IS OPTIONAL.
8. GRID CLIP (TENIC ESR-613765) CLAMPED TO INSULATION AT ASSEMBLY SHALL BE SOLDERED TO LEAD.

ISSUE 1 5-24-38

ISSUE 2 9-30-38

ISSUE 3 3-10-39

ISSUE 4 11-7-39

ISSUE 5 3-10-39

ISSUE 6 12-7-39

ISSUE 7 1-27-40

118-2 AMPLIFIER

SCALE NEW

BELL TELEPHONE LABORATORIES, INC. NEW YORK

ESR-613790

ESR-61...

PA-2565

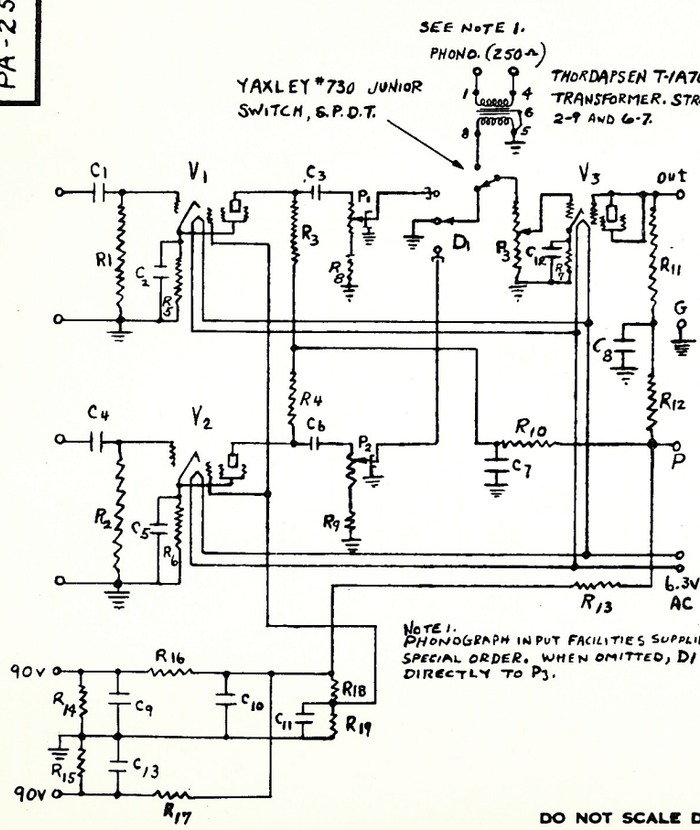

NOTE 1.
PHONOGRAPH INPUT FACILITIES SUPPLIED ONLY ON SPECIAL ORDER. WHEN OMITTED, D1 CONNECTS DIRECTLY TO P3.

DO NOT SCALE DRAWING

UNLESS OTHERWISE SPECIFIED ALL DIMENSIONS ± .005"

DESIGN NO.	Apparatus	Value
C1, C3	Condenser 600V	.05 mfd
C4, C6	" 600V.	.08 mfd
C2, C5	" 25V.	25 mfd
C12	" 25V	25 mfd
C7, C8	" 450V	8.0 mfd
C9, C13	" 450V	8-8 mfd
C10, C11	" 450V	8-8 mfd
D1	Switch I.R.C. AT-102	
P1, P2	Potentiometer 0.5 Meg	
P3	IRC VOL. CONT. POT. TYPE AT-101, 500,000 Ω	
R1 R2	Resistance 1 watt	100,000Ω
R3, R4	" "	100,000Ω
R5, R6, P1	" "	1,000Ω
R8, R9	" "	1.0 Meg
R10	" "	10000Ω
R12	" "	50,000Ω
R13	" "	10,000Ω
R11, R14, R15	" "	100,000Ω
R16, R17	" "	100000Ω
R18, R19	" "	50,000Ω
V1, V2, V3	6SJ7 Vac. Tube	

CHANGES

ISSUE NO. 1 10-28-40
NOTE 1 ADDED.
ISSUE 2 - 10-30-31
SHIELDING ON OUTPUT LEADS FROM P1 AND P2 ADDED
ISSUE 3 11-1-40
C2, C5, C12 WERE INCORRECTLY SHOWN AS .25 MFD. C9 DESIGN ADDED. DESIGN. ON C10, C11 WAS 8.0 MFD. P3 VALUE WAS NOT SHOWN R1, R2 WERE INCORRECTLY SHOWN AS .25 MEG, R10 AS 20,000Ω, AND R13 AS 50,000Ω. R8 ON DWG. WAS SHOWN AS R12 AND C10 AS C9.
ISSUE 4 11-12-40

TITLE
PA-7501 PREAMPLIFIER
SCHEMATIC

MATERIAL		FINISH	
DRAWN CTH	CHKD. RW	APPVD. RW	DATE 12/28/40

DRWG. NO. PA-2565

MOTIOGRAPH INC.
CHICAGO, ILL.

PA-7501 Amplifier

ALTEC SERVICE CORPORATION

PA-7501 Amplifier

5031.11

Printed in U.S.A.

AMA-2512

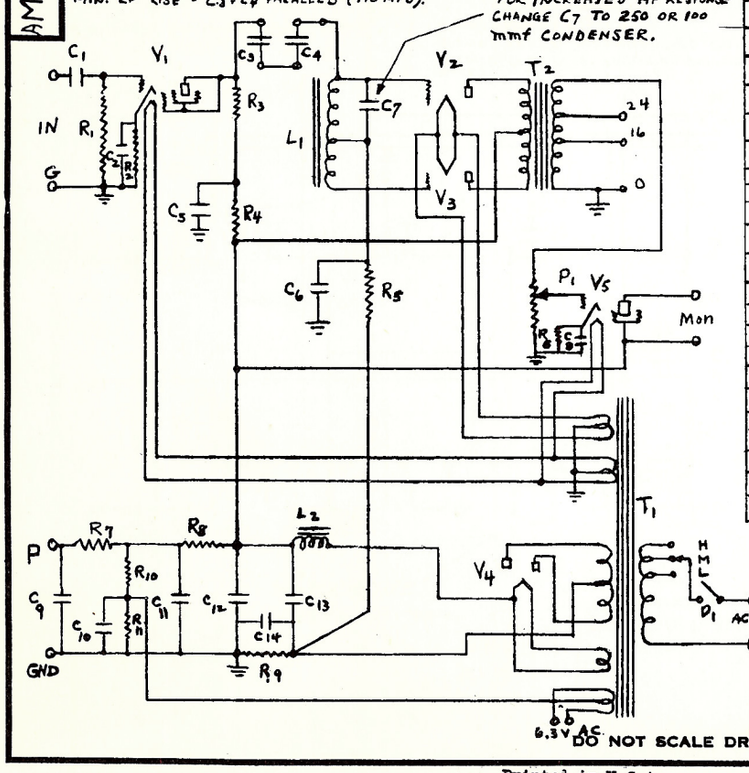

UNLESS OTHERWISE SPECIFIED ALL DIMENSIONS ± .005"

Design	Apparatus	Value
$C_1 C_3 C_4$	Condenser 600v.	.05 mf
$C_2 C_8 C_{10}$	" 25v	25 mf
$C_5 C_6$	" 450v	8.0 mf
$C_9 C_{14}$	" 450v	8.0 mf
C_7	"	500 mmf
$C_{11} C_{12} C_{13}$	" 450v	12.0 mf
D_1	Switch S.P.S.T. Toggle	
L_1	Choke Coil XB 604A	
L_2	" " 3212 E	
P_1	Potentiometer, IRC 500,000 Ω	
R_1	Resistance 1watt	1 meg.
R_3	Resistance 1watt	100,000Ω
$R_2 R_{11}$	" "	1,000Ω
$R_4 R_5$	" "	50,000Ω
R_6	PARALLELED " "	1,000Ω / 1,000Ω
R_7	PARALLELED " "	10,000Ω / 10,000Ω
R_8	" 10 WATT	1,500Ω
R_9	" 25 watt	300Ω
R_{10}	" 10 WATT	20,000Ω
T_1	Power Trans. XB558A	
T_2	Output Trans. XB564	
V_1	6SJ7 Vac. Tube	
V_2 V_3	2A3 " "	
V_4	5U4G " "	
V_5	6K6G " "	

CHANGES

ISSUE NO. 1 10/28/40

C_2, C_8, C_{10} WERE INCORRECTLY SHOWN AS .25 MF, AND R_1 AS 100,000Ω. NOTE ON HF RESPONSE ADDED.

ISSUE 2 12-14-40

DO NOT SCALE DRAWING

TITLE
MA-7502 AMPLIFIER SCHEMATIC

MATERIAL	FINISH		
DRAWN CTH	CHKD.	APPVD.	DATE 10/28/40

DRWG. NO AMA-2512

MOTIOGRAPH INC.
CHICAGO, ILL.

Printed in U.S.A.

5031.12 MA-7502 Amplifier ALTEC SERVICE CORPORATION MA-7502 Amplifier

1. DESCRIPTION - Open front chassis, all AC operated; separate chassis (PA-7505) for two stage pre-amplifier having individual input stages for two sound reproducer outputs, and changeover and volume control facilities; two stage main amplifier (MA-7505) containing phase inverter, push-pull output, plate supply rectifier, and monitor amplifier tube.

2. MOUNTING

2.1 For M-9 System (single amplifier cabinet) - MA-7015 Cabinet and External Controls.

2.2 For M-9A System (separate cabinets)
- PA-7015 Cabinet (for PA-7505)
- PA-7016 Extension Controls (for PA-7505)
- MA-7017 Cabinet (for MA-7505)

2.3 For M-9 Dual System
- PA-7015 Cabinet (for PA-7505)
- PA-7016 Extension Controls (for PA-7505)
- MA-7017 Cabinets (2) (for MA-7505)
- SE-7512 Amplifier Switching Panel

Note: When present stocks of MA-7015 and MA-7017 Cabinets are exhausted, the M-9 System will be discontinued and the MA-7000 Cabinet will replace the MA-7017 Cabinet in the M-9A and M-9 Dual Systems.

3. CHARACTERISTICS

Gain - 95 db. (maximum)
Volume Control - 38db. (19 - 2db. steps and OFF), in PA-7505 Amplifier
Impedence - Input - (PA-7505) High; works from 2 megohm load resistance in SH-7500 Reproducer
Output - (MA-7505) 16 or 32 ohms
Power Output - 18 watts, 34.8 db/.006W
Noise Level -17 db/.006W
Vacuum Tubes -

PA-7505 Preamplifier	MA-7505 Amplifier
2 - 6SF5	1 - 6N7G
1 - 6J5 or 6J5G	2 - 6L6G
	1 - 5Z3
	1 - 6K6G

Power Supply Required - 105-125 volts, 50-60 cycles, 125 watts
Power Supply Furnished - MA-7505 Amplifier furnishes heater supply of 6.3 volts AC at 0.9 amperes and 200 volts, rectified and filtered plate supply at 4.0 ma to PA-7505 Amplifier. PA-7505 Amplifier furnishes two photocell polarizing supplies of 90 volts DC, at approximately 10 microamperes.
Fusing - External fuses in power supply circuit to MA-7505 Amplifier should not exceed 3 amperes.
Equalization - Shunt condensers in MA-7505 Amplifier. Refer to circuit diagrams and system installation notes.
Dimensions - PA-7505 Amplifier - 8-3/4" H. x 9" W. x 5-1/4" D.
MA-7505 Amplifier - 12-1/2" H. x 16-1/2" W. x 7-1/2" D.
Weight - PA-7505 Amplifier 3 lbs.
MA-7505 Amplifier 30 lbs.

4. TESTING PROCEDURE - Average Tube Socket Voltages and Currents, using 20,000 ohm/volt meter. DC voltages measured to cathode, except as noted.

PA-7505 Amplifier			MA-7505 Amplifier		
6SF5 Input Tubes,	E_p	145V (250V scale)	6N7G Phase Inv. Tube,	E_p	100V (250V scale)
	E_g	1.3V (10V scale)		E_g	1.7V pin 4 (10V scale)
6J5G Output Tube,	E_p	105V (250V scale)			0.6V " 5 " "
	E_g	4.0V (10V scale)	6L6G Output Tubes,	E_p	380V (1000V scale)
				E_s	300V (1000V scale)
				E_g	18.5V (50V scale)
			5Z3 Rectifier Tube,	E_p	520V (1000VAC scale, plate to ground)
				E output	420V (1000VDC scale, fil. to ground)
			6K6G Monitor Tube,	E_p	290V (1000V scale)
				E_s	300V (1000V scale)
				E_g	21V (50V scale, Mon. Vol. Contr. OFF)

ASSOCIATED DRAWINGS

APA-2566	PA-7505 Amplifier, Schematic Diagram
APA-2567	PA-7505 Amplifier, Wiring Diagram
AMA-2513	MA-7505 Amplifier, Schematic Diagram
LMA-2514	MA-7505 Amplifier, Wiring Diagram

Issued by
Engineering Department
Printed in U. S. A.

APA-2566

UNLESS OTHERWISE SPECIFIED
ALL DIMENSIONS ± .005"

FOR MACHINE BALANCING, CONNECTION OF SHORTING STRAP AT "A" TO SUCCESSIVE RESISTOR JUNCTIONS FROM GROUND REDUCES CORRESPONDING CHANNEL'S OUTPUT IN STEPS OF APPROXIMATELY 1 DB.

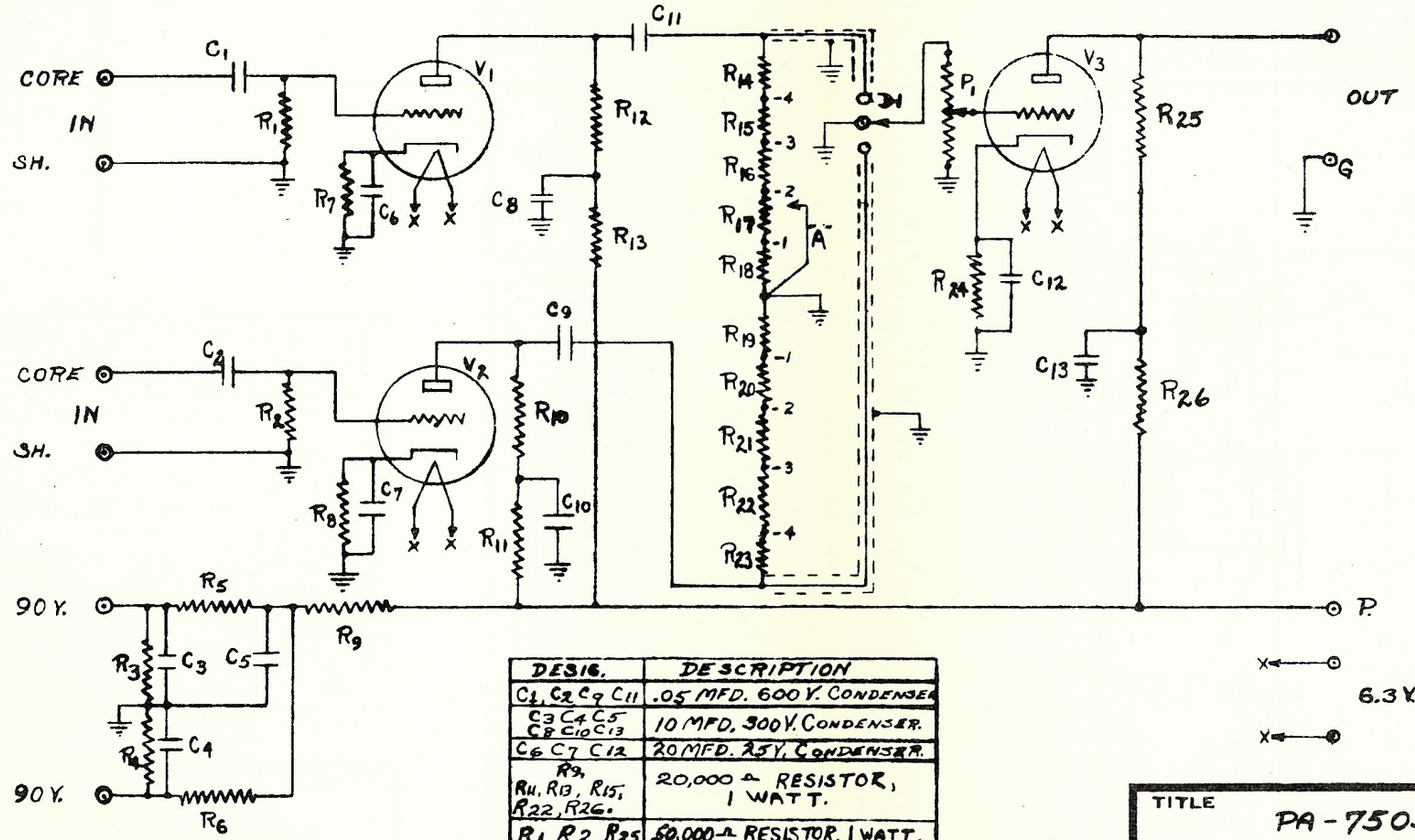

DESIG.	DESCRIPTION
C1, C2 C9 C11	.05 MFD. 600 V. CONDENSER
C3 C4 C5 C8 C10 C13	10 MFD. 300 V. CONDENSER.
C6 C7 C12	20 MFD. 25 V. CONDENSER.
R9, R11, R13, R15, R22, R26.	20,000 Ω RESISTOR, 1 WATT.
R1, R2, R25	50,000 Ω RESISTOR, 1 WATT.
R3, R4, R5 R6, R10, R12	100,000 Ω RESISTOR, 1 WATT
R7, R8, R24	RESISTOR - 3500 Ω, 1 WATT
R14, R23	RESISTOR - 60 M. Ω, "
R16, R21	RESISTOR - 30 M Ω, "
R17, R20	RESISTOR - 75 M Ω, "
R18, R19	RESISTOR - 250 M Ω, "
D1	I.R.C. AT-102 SWITCH
P1	I.R.C. AT-101 POT. 500 M Ω
V1, V2	6SF5 VACUUM TUBES
V3	6V5 " "

CHANGES

ISSUE NO. 1 2-10-41
R-26 WAS SHOWN AS R-27. R-25 WAS 100 M Ω. A RESISTOR (R-26, 100 MΩ) WAS SHOWN BETWEEN R-25 AND PRESENT R-26. A CONDENSER (C-14, .002 MFR.) WAS SHOWN IN UNGROUNDED "OUT" LEAD WHICH ALSO CONNECTED TO JUNCTION BETWEEN R-25 AND FORMER R-26. R-10 & R-12 WERE 100 M Ω.

ISSUE 2, 3-17-41 RTO
P1 & R2 WERE 20 M Ω
R10 & R12 WERE 50 M Ω
R14 & R23 WERE 50 M Ω
V3 WAS 6SF5 V. TUBE

ISSUE 3, 3-28-41 RTO

TITLE
PA-7505
PRE-AMPLIFIER
SCHEMATIC

MATERIAL	FINISH		
DRAWN Ramin	CHKD. RTO	APPVD. RTO	DATE 2-10-41

DRWG. NO. APA-2566

MOTIOGRAPH INC.
CHICAGO, ILL.

5031.62
PA-7505 PRE-AMPLIFIER

ALTEC SERVICE CORPORATION

APA-2567

FOR MACHINE BALANCING, CONNECTION OF SHORTING STRAP AT 'A' TO SUCCESSIVE RESISTOR JUNCTIONS FROM GROUND REDUCES CORRESPONDING CHANNEL'S OUTPUT IN STEPS OF APPROXIMATELY 1 DB.

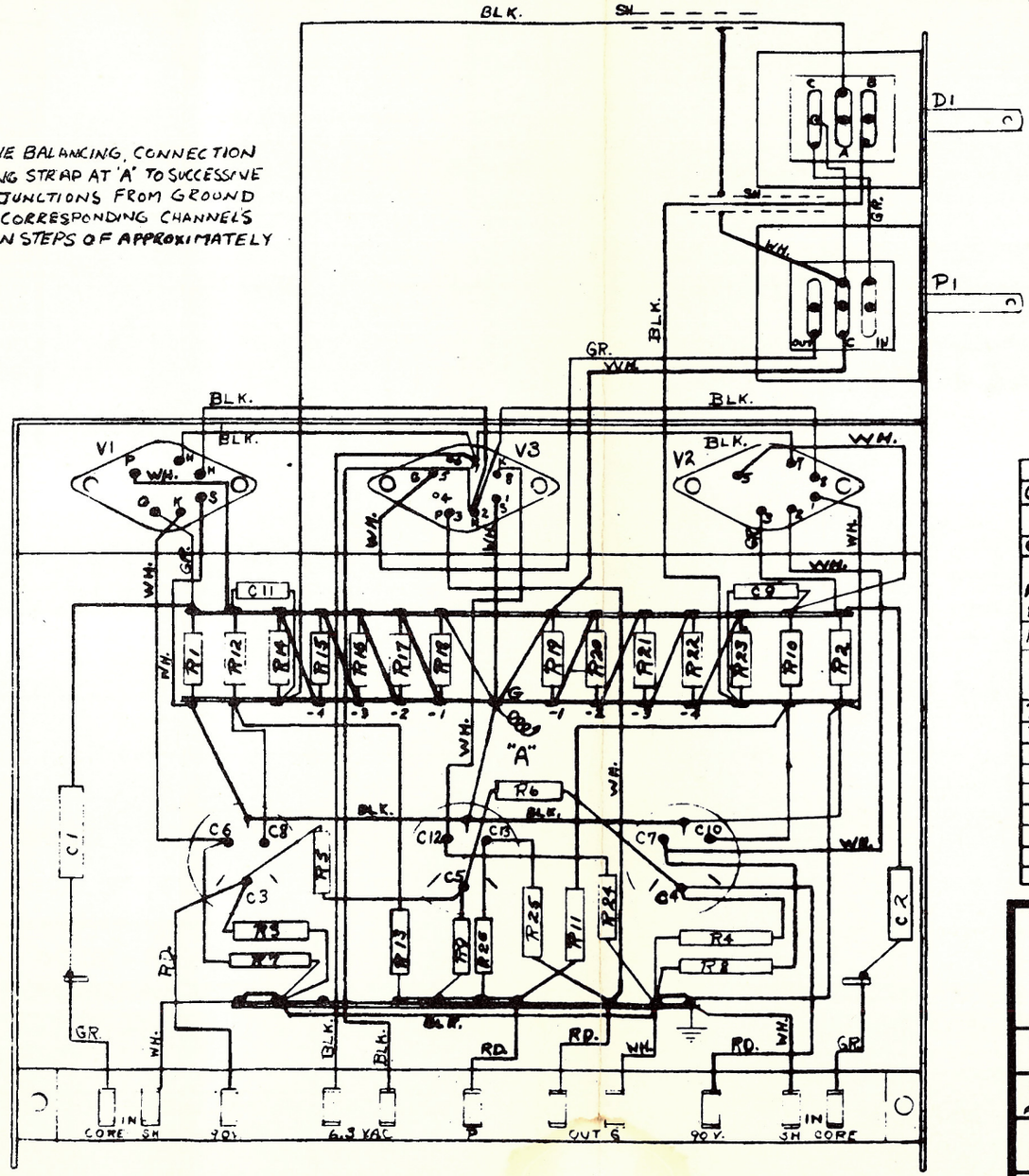

DO NOT SCALE DRAWING

CHANGES

ISSUE NO. 1 2-10-40 REVISED TO AGREE WITH ISSUE 2 OF SCHEMATIC. SEE APA-2566-2 FOR DETAILS.

ISSUE 2 3-18-41 RTV REVISED TO AGREE WITH ISSUE 3 OF SCHEMATIC AND WIRING PRODUCTION AMPLIFIER

ISSUE 3 3-28-41 RTV

DESIG.	DESCRIPTION
C1, C2, C9, C11	.05 MFD 600 V. CONDENSER
C3, C4, C5 C8, C10, C13	10 MFD. 300 V. CONDENSER
C6, C7, C12	20 MFD. 25 V. CONDENSER
P9, R11, R13, R15, R22, R26.	20,000 Ω RESISTOR 1 WATT.
P1, P2, R25	50,000 Ω RESISTOR, 1 WATT.
R3, R4, R5, R6, R10, R12	100,000 Ω RESISTOR 1 WATT
R7, R8, R24	RESISTOR- 3500 Ω, 1 WATT
R14, R23	RESISTOR- 5 OM. Ω, "
R16, R21	RESISTOR- 30 M Ω, "
R17, R20	RESISTOR- 75 M Ω, "
R18, R19	RESISTOR- 250 M Ω, "
D1	I.R.C. AT-102 SWITCH.
P1	I.R.C. AT-101 POT. 500 M Ω
V1, V2	6SF5 VACUUM TUBES
V3	6J5 " "

TITLE

PA-7505
PRE-AMPLIFIER
WIRING DIAGRAM

MATERIAL		FINISH	
DRAWN Ramin	CHKD. RTV	APP'VD. RTV	DATE 2-10-40

DRWG. NO. APA-2567

MOTIOGRAPH INC.
CHICAGO, ILL.

Printed U.S.A.

AMA-2513

UNLESS OTHERWISE SPECIFIED
ALL DIMENSIONS ± .005"

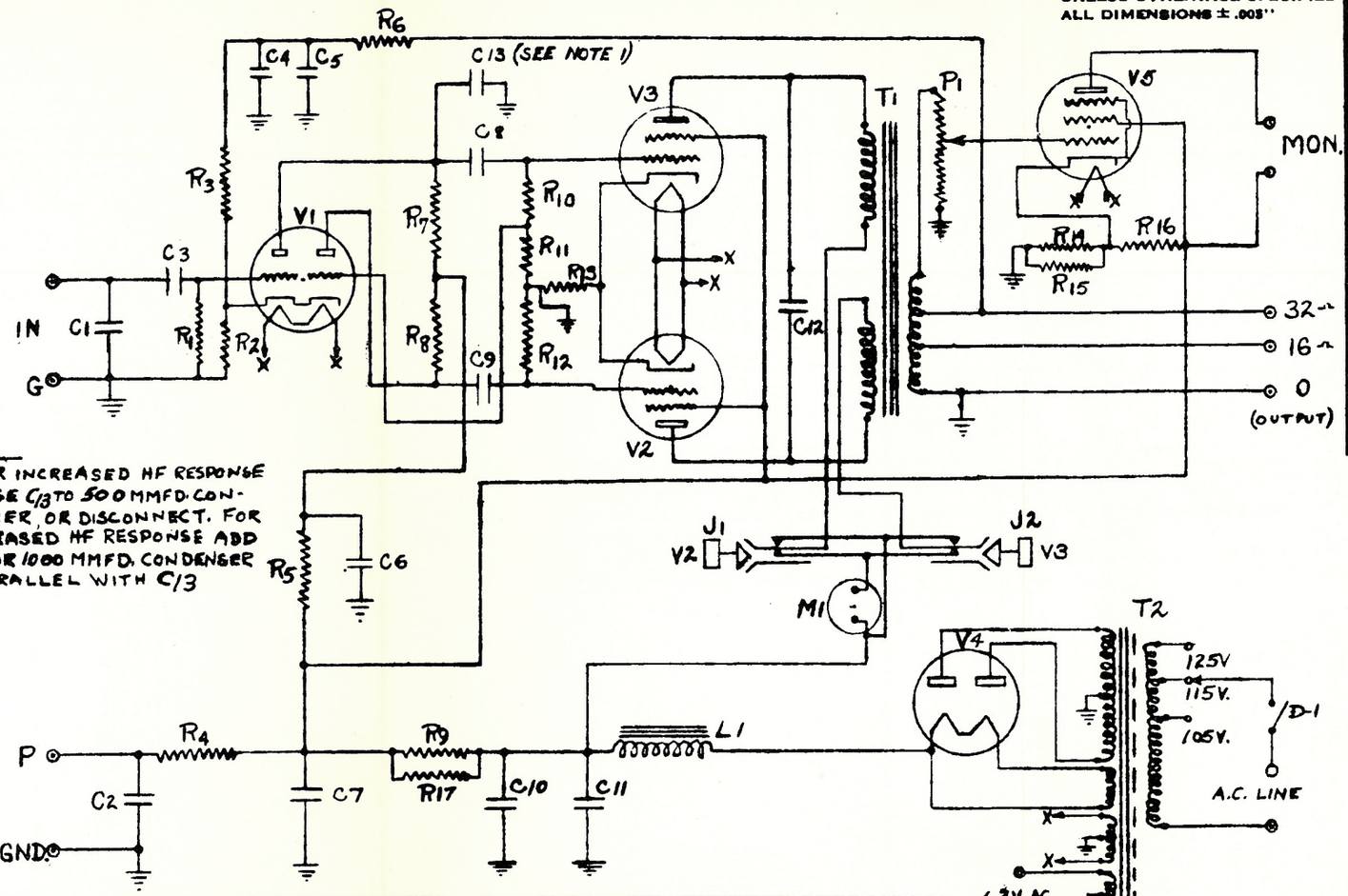

NOTES:
1. FOR INCREASED HF RESPONSE CHANGE C13 TO 500 MMFD. CONDENSER, OR DISCONNECT. FOR DECREASED HF RESPONSE ADD 500 OR 1000 MMFD. CONDENSER IN PARALLEL WITH C13

LMA-2514 - WIRING DIAGRAM

DESIG.	DESCRIPTION
C1	500 MMFD. CONDENSER.
C2, C6, C7 C10, C11	15 MFD. 450 V. CONDENSER.
C3, C8, C9	.05 MFD. 600 V. CONDENSER.
C4, C5	.3 MFD. 600 V. CONDENSER.
C12	.005 MFD. 1000 V. CONDENSER.
D1	H. & H. 3A. 125 V. S.P.S.T. TOGGLE SWITCH
L1	T-2760 CHOKE
R1	RESISTOR - 2 MEG Ω 1 WATT
R2	RESISTOR - 500 Ω 1 WATT
R3	RESISTOR - 20,000 Ω 1 WATT
R6, R11	RESISTOR - 10,000 Ω 1 WATT
R4, R5	RESISTOR - 30000 Ω 1 WATT
R7, R8	RESISTOR - 50,000 Ω 1 WATT
R14, R15	RESISTOR - 1000 Ω 1 WATT
C13	.001 MFD. CONDENSER

DESIG.	DESCRIPTION
R9, R17	RESISTOR 3000 Ω 5 WATT
R10, R12	RESISTOR 250,000 Ω 1 WATT
R13	RESISTOR 175 Ω 5 WATT
R16	RESISTOR 75,000 Ω 1 WATT
V1	6N7G VACUUM TUBE.
V2, V3	6L6G VACUUM TUBE.
V4	523 VACUUM TUBE.
V5	6K6G VACUUM TUBE.
J1	CARTER #433 S.P.D.T. P.B. SWITCH
J2	" " " " "
M1	MARION MODEL 52-S 0-150 MILLIAMMETER
T1	T-2729 OUTPUT TRANS.
T2	P-1626 POWER TRANS.
P1	1 MEG. VOL. CONT. POT.

DO NOT SCALE DRAWING

CHANGES

ISSUE NO. 1 2-10-41 RM AND R15 WERE 500 Ω BT-1 INCORR. R17 ADDED. R4 WAS 10 M Ω. R3 WAS 20 M Ω. BOTTOM OF R7 WAS CONNECTED TO TOP OF R8. "6.3 V. AC" ADDED. NOTE 1 ADDED.

ISSUE 2 3-18-41 RW C13 ADDED. NOTE 1 REFERRED TO C1 AND C VALUES WERE 250, 250, AND 500 MMF. R3 WAS 7500 Ω R13 WAS 200 Ω C12 WAS 600 V. T1 WAS T-2759

ISSUE 3, 3-28-41 RC

TITLE
MA-7505 AMPLIFIER SCHEMATIC

MATERIAL | FINISH

DRAWN CHKD. RTV APPVD. RTV DATE 2-10-41

DRWG. NO. AMA-2513

MOTIOGRAPH INC.
CHICAGO, ILL.

5031.64

ALTEC SERVICE CORPORATION

MA-7505 AMPLIFIER

LMA-2514

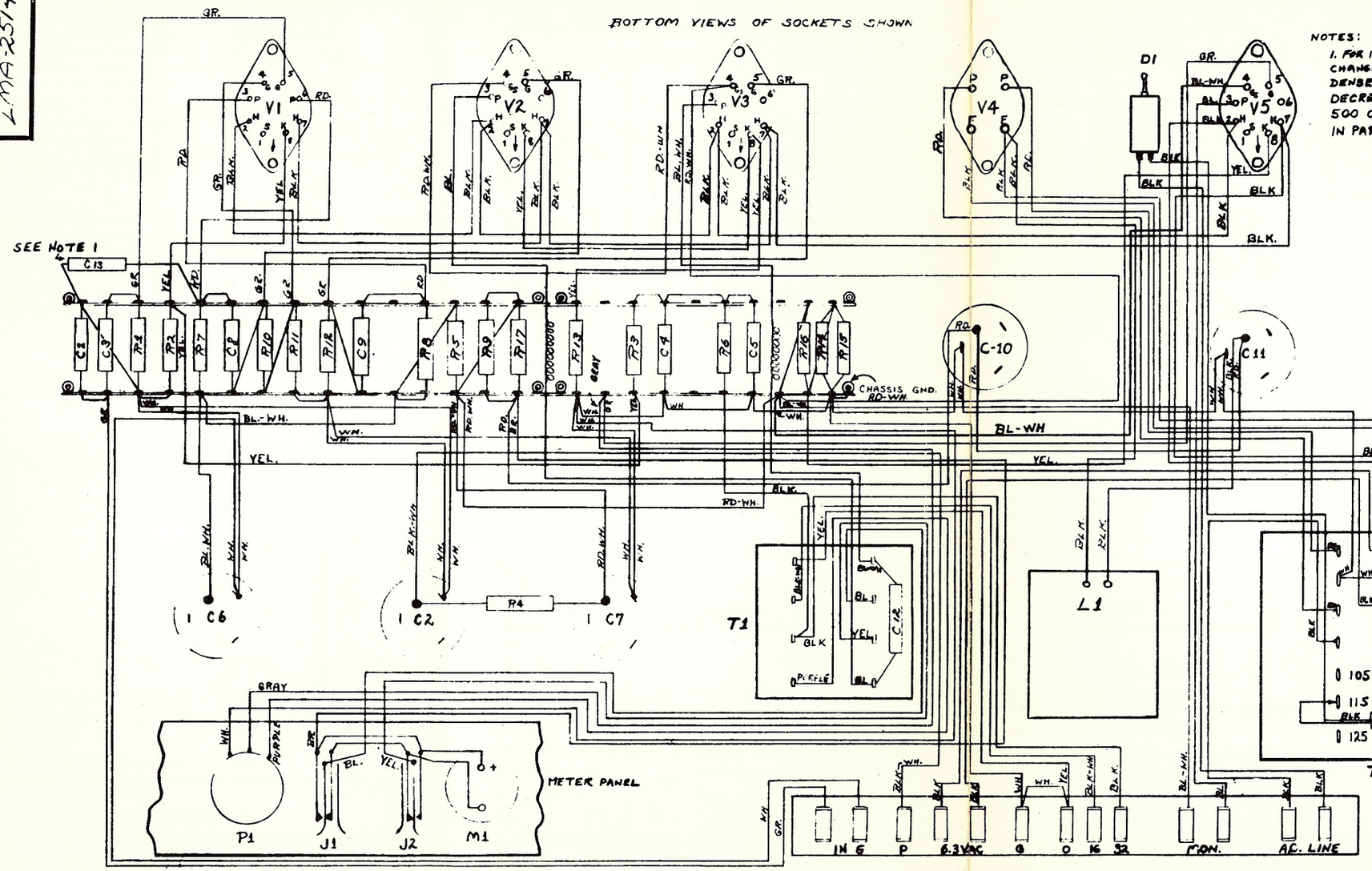

NOTES:

1. FOR INCREASED HF RESPONSE CHANGE C13 TO 500 MMFD. CONDENSER, OR DISCONNECT. FOR DECREASED HF RESPONSE ADD 500 OR 1000 MMFD. CONDENSER IN PARALLEL WITH C13.

CHANGES

ISSUE NO. 1 2-10-41 REDRAWN FROM ISSUE 1 DUE TO EXTENSIVE CHANGE IN WIRING LAYOUT, AND TO AGREE WITH SCHEMATIC FOR DETAILS REFER TO AMA-2513-2.

ISSUE 2 3-18-41 RTV REVISED TO AGREE WITH ISSUE 3 OF SCHEMATIC AND WITH PRODUCTION AMPLIFIERS.

ISSUE 3, 3-28-41 RTV

DESIG	DESCRIPTION
C1	500 MMFD. CONDENSER
C2, C6, C7 C10, C11	15 MFD 450V. CONDENSER.
C3, C8, C9	.05 MFD. 600V CONDENSER.
C4, C5	.3 MFD. 600V. CONDENSER.
C12	.005 MFD. 1000V. CONDENSER.
D1	H. & H. 3A 125V. S.P.S.T. TOGGLE SWITCH.
L1	T-2760 CHOKE
R1	RESISTOR - 2 MEG. Ω 1 WATT.
R2	RESISTOR - 500 Ω 1 "
C13	.001 MFD. CONDENSER

DESIG.	DESCRIPTION
R14, R15	RESISTOR - 1000 Ω 1 WATT
R3	RESISTOR - 20,000 Ω 1 "
R6, R11	RESISTOR - 10,000 Ω 1 "
R4, R5	RESISTOR - 30,000 Ω 1 "
R7, R8	RESISTOR - 50,000 Ω 1 "
R9, R17	RESISTOR - 3000 Ω 5 WATTS
R10, R12	RESISTOR - 250,000 Ω 1 WATT
R13	RESISTOR - 175 Ω 5 WATTS.
R16	RESISTOR - 75,000 Ω 1 WATT.
P1	1 MEG VOL. CONT. POTENTIOMETER

DESIG.	DESCRIPTION
V1	6N7G VACUUM TUBE.
V2, V3	6L6G " "
V4	5Z3 " "
V5	6K6G " "
J1	CARTER #433 S.P.D.T. P.B. SWITCH
J2	" " " " "
M1	MARION MODEL 52-S, 0-150 MILLIAMMETER
T1	T-2729 OUTPUT TRANS.
T2	P-1826 POWER TRANS.

DO NOT SCALE DRAWING

AMA-2513 - SCHEMATIC

TITLE
MA-7505 AMPLIFIER
WIRING DIAGRAM

MATERIAL _____ FINISH _____

DRAWN	CHKD.	APPVD.	DATE
[illegible]	RTV	RTV	3-18-41

DRWG. NO. LMA-2514

MOTIOGRAPH INC.
CHICAGO, ILL.

Printed in U. S. A.

1. DESCRIPTION

1.1 The PA-7505-A Amplifier is a chassis-type preamplifier. Individual input stages for two reproducers are provided, and these work into a common output stage through a commutator type changeover switch and master volume control potentiometer.

1.2 The MA-7505-A Amplifier is a chassis-type unit intended for use as an output or intermediate power amplifier.

2. MOUNTING

2.1 The PA-7505-A chassis is designed to be mounted in the associated cabinet on one side; tubes and auxiliary balancing controls occupy the opposite, or upper side, and the conventional "bottom" of the chassis faces outward so that all components are easily accessible for tests or servicing. The changeover switch and main volume control are mounted on an upright bracket at one corner of the chassis with shafts horizontal so they may be controlled from either projector operating position by means of extension control shafts.

2.2 The MA-7505-A chassis is mounted on one side in the associated cabinet, with tubes occupying the opposite, or upper side. Likewise, the conventional chassis "bottom" faces outward, but in the MA-7505-A Amplifier it is provided with a hinged metal cover plate which thus serves as a front panel, and carries the monitor volume control and the plate current meter and switches.

3. CHARACTERISTICS

3.1 PA-7505-A Amplifier

Volume Control- Continuously variable plate circuit potentiometers (range - 8 db) for balancing input stages. Main volume control - 38 db (19 - 2 db steps and OFF).
Impedance- Input - Actual - 110,000 ohms. (Works from SH-7500 Reproducer).
Output - Actual - 17,000 ohms. (Works into MA-7505-A Amplifier).
Power Supply Required- 6.3 VAC., 0.9 amperes, 200 VDC., 0.005 amperes. (from MA-7505-A Ampl.)
Power Supply Furnished- 90 VDC., 10 micro-amperes. (to two P.E.C. circuits)
Dimensions- 9" W. x 9" H. x 6-3/4" D.
Weight- 5-1/4 lbs. (without tubes)

3.2 MA-7505-A Amplifier

Volume Control- Multi-unit grid resistance and movable grid lead in input stage. Range - 6 db. (3 - 2 db steps)
Impedance- Input - Actual - 70,000 ohms. (Works from PA-7505-A Amplifier).
Output - Nominal - 16 or 32 ohms.
Power Output- 20 watts (35.2 db/.006W.), 2% total distortion, 50-5000 cps.
Power Supply Required- 105-125 volts, 60 cycles, 150 watts.
Fuse Required- 2 ampere, 4 AG (1-1/4" x 9/32"), Glass Tubular. Motiograph Part #MA-2681.
Power Supply Furnished- 6.3 VAC., 0.9 amperes, 200 VDC., 0.005 amperes.
Dimensions- 17" W. x 8" H. x 7" D. (without tubes)
Weight- 28 lbs. (without tubes)

3.3 Combined PA and MA-7505-A Amplifiers mounted in their cabinets and connected with 20' of cable.

Total Gain- 98 db. (Measured with PA-7505-A Amplifier input terminals terminated with a 1 megohm resistor in series with a 100 ohm resistor on the grounded side across which a signal voltage of 0.040 volts is applied.)
Noise Level- -45 db/.006W (PA-7505-A Amplifier changeover switch in OFF position and volume control at 0.)
-35 db/.006W (Volume control on Step 10, open PA-7505-A Amplifier input terminals.)
Frequency Response- Refer to LSS-7540.

4. ACCESSORIES

4.1 PA-7505-A Amplifier- 1 - PA-7015 Cabinet
1 - PA-7016 Set, Extension Controls

4.2 MA-7505-A Amplifier- 1 - MA-7000 Cabinet
1 - MA-7018 Set, Mounting Angles (for rack mounting)

5. OPERATION

5.1 The milliammeter on the meter panel of the MA-7505-A Amplifier indicates the plate current in the push-pull output stage. The meter normally indicates the sum of the plate currents of the two tubes comprising this stage. When D-2 push button is operated, the indication is of V-3 alone. When D-3 button is operated, the indication is similarly that of V-4 alone. Total plate current should be between 150 and 160 milliamperes. Normal current for either tube alone should be 75 or 80 milliamperes. For best amplifier performance, plate currents should be balanced within 10 milliamperes.

Issued by
Engineering Department
Printed in U. S. A.

ASSOCIATED DRAWINGS

APA-2637	PA-7505-A Amplifier, Schematic
APA-2638	PA-7505-A Amplifier, Wiring Diagram
LMA-2650	MA-7505-A Amplifier, Schematic
LMA-2649	MA-7505-A Amplifier, Wiring Diagram
LSS-7540	7505-A Type Amplifiers, Equalization Curves

Issued by
Engineering Department
Printed in U. S. A.

USE OF METAL 6L6 TUBES IN MA-7505-A AMPLIFIERS

There have been several field reports recently of troubles experienced when attempts are made to use metal 6L6 tubes in MA-7505-A amplifiers and a few reports of similar difficulties with recently produced RCA 6L6G tubes and 16L4 tubes, which are specially selected 6L6 type. We have just completed an extensive investigation of this matter, aided by tube company engineers, and have worked out a very simple corrective procedure.

At the time of the development work on the 7505-A type amplifiers only 6L6GA tubes were available. The amplifiers are stable using these tubes. With the other types,however, the slightly different tube characteristics in combination with stray coupling in the amplifier wiring cause a tendency toward the production of parasitic oscillations in the amplifier output stage. These oscillations may be in, or well above the audible range, and they may be intermittent or continuous; a few cases have been observed where they appear only when the output stage is being driven to nearly full output by an audio signal. The observed effects may be steady howling, extreme audio distortion, heavy hum in the amplifier output, poor balance in the output stage plate currents, very short tube life, or any combination of these effects.

There are several different ways to correct this trouble. One, for example, is to install shields on certain of the wire leads along the top of the resistor and condenser mounting strips in the amplifier, thus reducing the stray coupling below the point where it is troublesome. For existing amplifiers, however, this procedure is difficult, messy, and expensive. The preferred way, and the one which we are adopting, consists of installing small fixed resistors in the 6L6 tube grid leads directly at the tube sockets as parasitic oscillation suppressors. This procedure is standard practice in the amplifier stages of many radio transmitters using beam power tubes under conditions similar to those encountered in our amplifiers. There are no effects whatever on the performance of the amplifiers other than the elimination of the tendency toward instability.

6L6 type tubes have an unused base pin position, #6. The suppressor resistors are installed very simply by unsoldering the green grid lead wires from VS3 and VS4 #5 socket grid terminals, bridging the resistors across terminals #5 and #6, and reconnecting the grid lead wires to the #6 instead of the #5 terminals, thus connecting the resistors in series with the grid leads. The resistors may be 1/4, 1/3, or 1/2 watt, 100 ohm units, either carbon or wire-wound.

As of this date, new MA-7505-A Amplifiers are being equipped with the suppressor resistors during manufacture, and the amplifier diagrams are being revised to call for them. For any existing Motiograph-Mirrophonic sound equipment installation using 7505-type amplifiers where trouble is being experienced Motiograph will supply upon request and without charge the required number of resistors. Two are required for each MA-7505-A Amplifier in the installation; order them as "MA-2688 Parasitic Suppressor Resistor" and give the name of the installation for which they are needed.

M O T I O G R A P H
Chicago, Illinois.

Issued by
Engineering Department
Printed in U. S. A.

SUGGESTED MODIFICATION OF MA-7505-A AMPLIFIERS TO ELIMINATE OSCILLATION

1. GENERAL

1.1 The modification outlined below which was suggested by one of our field inspectors and approved by Motiograph, Inc., is submitted for your use to eliminate oscillation in the MA-7505-A Amplifier.

2. PROCEDURE

2.1 The change involved consists of unsoldering the leads from the screen terminals of V3, taking them out of the cable form, running them straight across in the open and reconnecting. If possible these two leads should be kept at least 1/4" to 1/2" away from the chassis.

2.2 Motiograph advises that the screen circuits are now run in red-blue wire instead of red-white as called for on the wiring diagrams in order to distinguish the circuits from the red plate circuits. This change in color code will be corrected on the next printing of wiring diagram.

3. COMMENTS

3.1 Motiograph further advises that the wiring change as submitted by our inspector has been tried out many times and according to all reports, it helps in the majority of cases though not in all, particularly with the worst 6L6's. It has the virtue, however, of not adversely affecting the amplifier performance and this wiring change will be put into effect at once on new amplifier production.

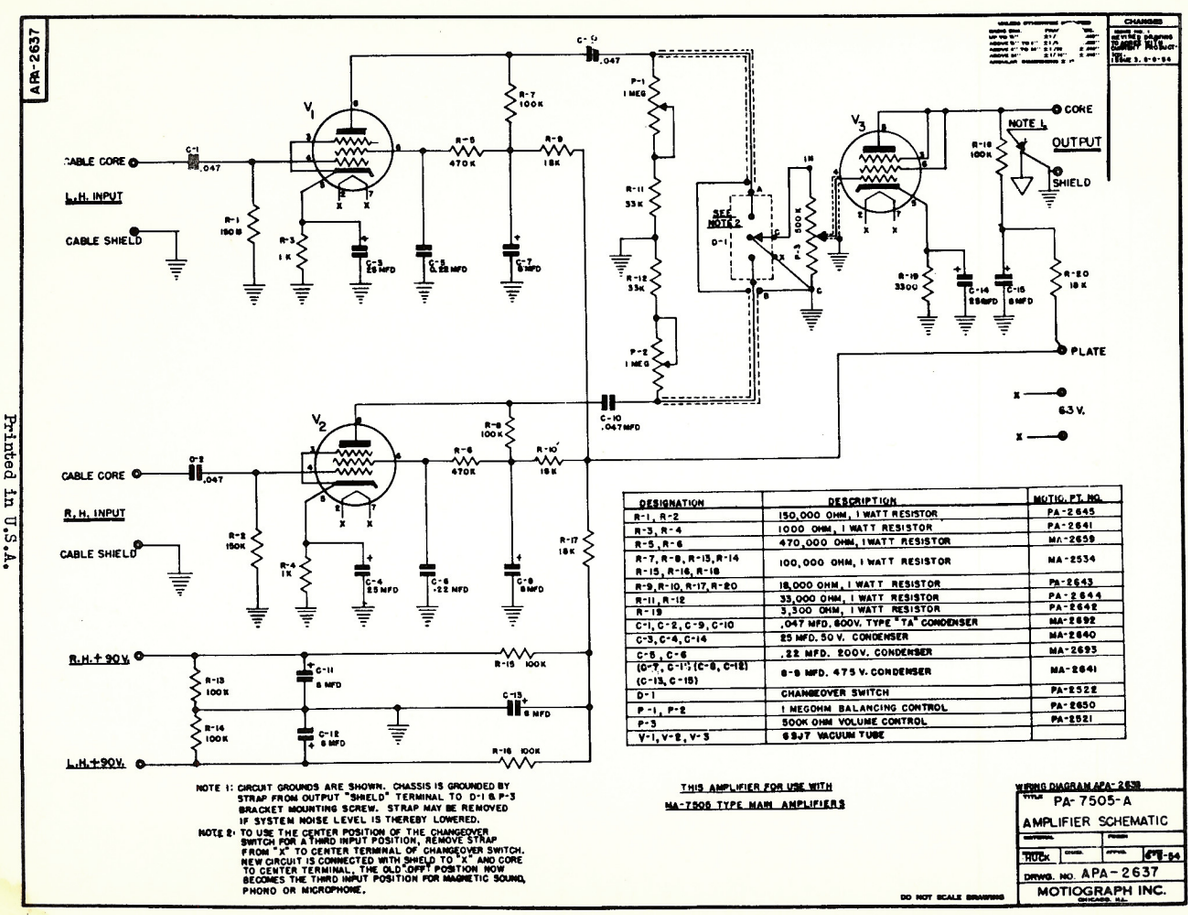

DESIGNATION	DESCRIPTION	MOTIO. PT. NO.
R-1, R-2	150,000 OHM, 1 WATT RESISTOR	PA-2645
R-3, R-4	1000 OHM, 1 WATT RESISTOR	PA-2641
R-5, R-6	470,000 OHM, 1 WATT RESISTOR	MA-2659
R-7, R-8, R-13, R-14 R-15, R-16, R-18	100,000 OHM, 1 WATT RESISTOR	MA-2534
R-9, R-10, R-17, R-20	18,000 OHM, 1 WATT RESISTOR	PA-2643
R-11, R-12	33,000 OHM, 1 WATT RESISTOR	PA-2644
R-19	3,300 OHM, 1 WATT RESISTOR	PA-2642
C-1, C-2, C-9, C-10	.047 MFD. 600V. TYPE "TA" CONDENSER	MA-2692
C-3, C-4, C-14	25 MFD. 50 V. CONDENSER	MA-2640
C-5, C-6	.22 MFD. 200V. CONDENSER	MA-2693
(C-7, C-11) (C-8, C-12) (C-13, C-15)	8-8 MFD. 475 V. CONDENSER	MA-2641
D-1	CHANGEOVER SWITCH	PA-2522
P-1, P-2	1 MEGOHM BALANCING CONTROL	PA-2650
P-3	500K OHM VOLUME CONTROL	PA-2521
V-1, V-2, V-3	6SJ7 VACUUM TUBE	

NOTE 1: CIRCUIT GROUNDS ARE SHOWN. CHASSIS IS GROUNDED BY STRAP FROM OUTPUT "SHIELD" TERMINAL TO D-1 & P-3 BRACKET MOUNTING SCREW. STRAP MAY BE REMOVED IF SYSTEM NOISE LEVEL IS THEREBY LOWERED.

NOTE 2: TO USE THE CENTER POSITION OF THE CHANGEOVER SWITCH FOR A THIRD INPUT POSITION, REMOVE STRAP FROM "X" TO CENTER TERMINAL OF CHANGEOVER SWITCH. NEW CIRCUIT IS CONNECTED WITH SHIELD TO "X" AND CORE TO CENTER TERMINAL. THE OLD "OFF" POSITION NOW BECOMES THE THIRD INPUT POSITION FOR MAGNETIC SOUND, PHONO OR MICROPHONE.

THIS AMPLIFIER FOR USE WITH MA-7506 TYPE MAIN AMPLIFIERS

DO NOT SCALE DRAWINGS

WIRING DIAGRAM APA-2638

TITLE PA-7505-A AMPLIFIER SCHEMATIC

DRWG. NO. APA-2637

MOTIOGRAPH INC. CHICAGO, ILL.

Printed in U.S.A.

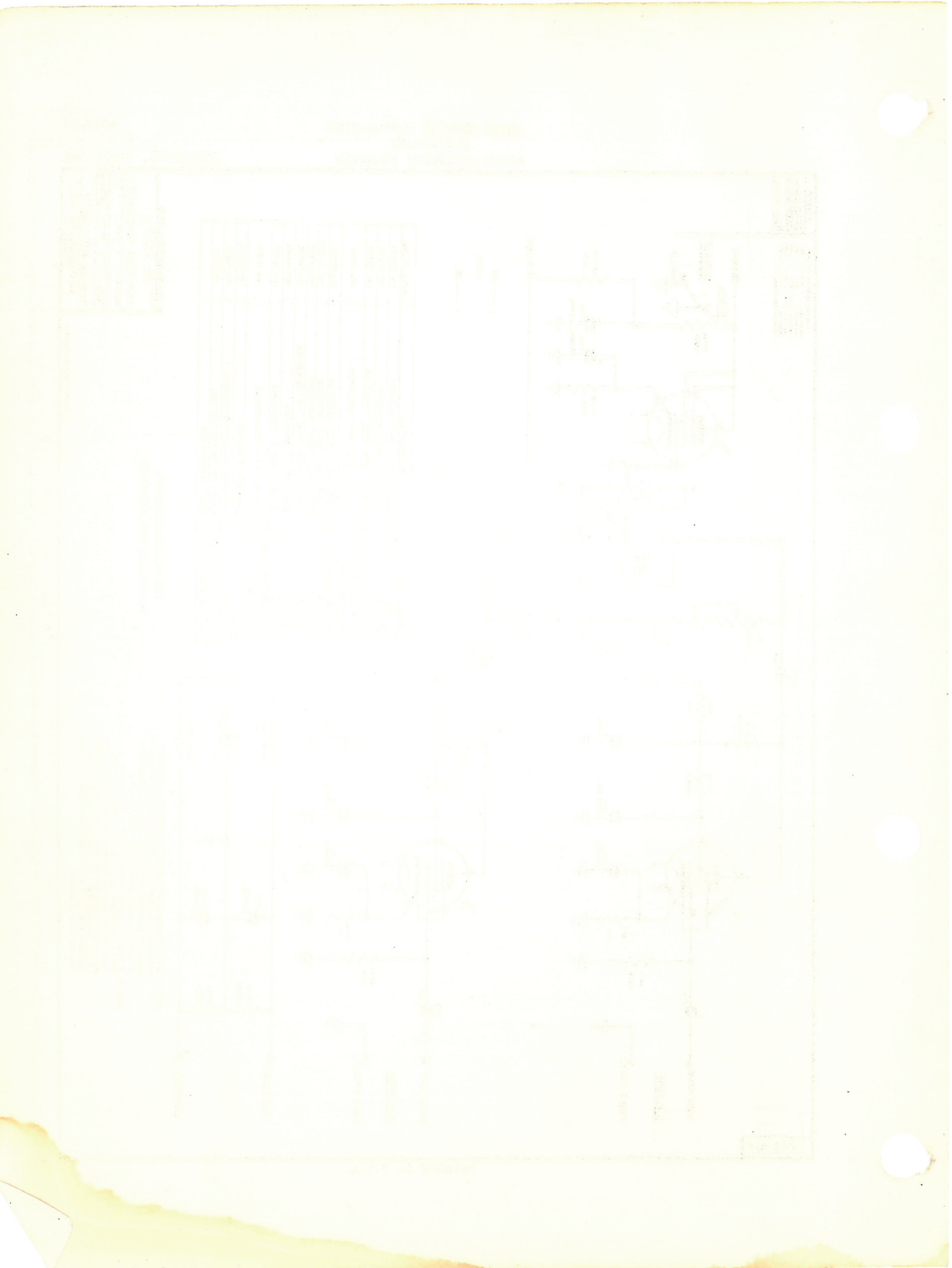

APA-2637

UNLESS OTHERWISE SPECIFIED
DECIMAL DIMENSIONS ± .005"
FRACTIONAL DIMENSIONS ± 1/64"
ANGULAR DIMENSIONS ± 1°

CHANGES
ISSUE NO. 1 8-15-44

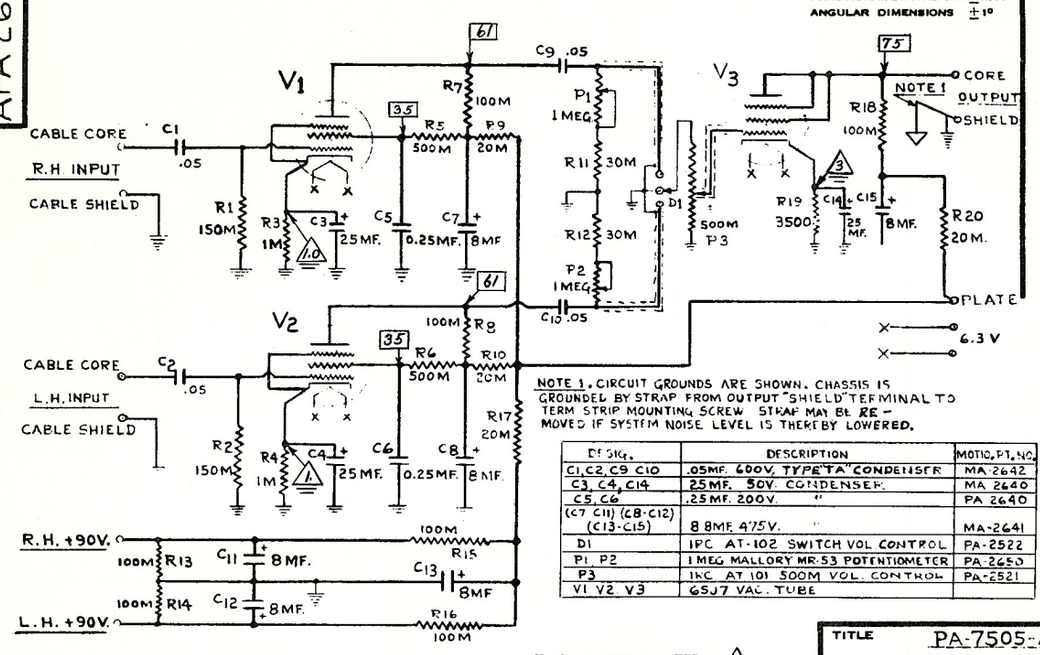

NOTE 1. CIRCUIT GROUNDS ARE SHOWN. CHASSIS IS GROUNDED BY STRAP FROM OUTPUT "SHIELD" TERMINAL TO TERM STRIP MOUNTING SCREW. STRAP MAY BE REMOVED IF SYSTEM NOISE LEVEL IS THEREBY LOWERED.

DESIG.	DESCRIPTION	MOTIO. PT. NO.
C1, C2, C9 C10	.05MF. 600V. TYPE "A" CONDENSER	MA-2642
C3, C4, C14	25MF. 50V. CONDENSER.	MA 2640
C5, C6	.25MF. 200V. "	PA 2640
(C7 C11) (C8-C12) (C13-C15)	8 8MF. 475V.	MA-2641
D1	IRC AT-102 SWITCH VOL CONTROL	PA-2522
P1 P2	1 MEG MALLORY MR-53 POTENTIOMETER	PA-2650
P3	1RC AT 101 500M VOL. CONTROL	PA-2521
V1 V2 V3	6SJ7 VAC. TUBE	

DESIG.	DESCRIPTION	MOTIO. PT. NO.
R1 R2	150 000 OHM ½ WATT RESISTOR	PA-2645
R3 R4	1,000 " " " "	PA-2641
R5 R6	500,000 " " " "	MA-2535
R7 R8 R13 R14 R15 R16 R18	100,000 " " " "	MA-2534
R9 R10 R17 R20	20,000 " " " "	PA-2643
R11 R12	30,000 " " " "	FA-2644
R19	3,500 " " " "	PA-2642

Numbers shown in □ or △ are nominal voltages to cathode (▭ or △ to ground), as read on TA-4147 meter. Volume controls at zero, changeover switch "OFF".
□ - 1000 V meter scale - ▭
△ - 25 V meter scale - △

DO NOT SCALE DRAWING

TITLE PA-7505-A AMPLIFIER SCHEMATIC

MATERIAL	FINISH
DRAWN H.M.C.	CHKD. RJ
APPVD. KTJ	DATE 8-15-44

DRWG. NO. APA-2637

MOTIOGRAPH CHICAGO, ILL.

Printed in U. S. A.

ALTEC SERVICE CORPORATION

PA-7505A Amplifier

5032.11

APA-2638

NOTE.
BLACK WIRING TO TUBE SOCKETS IS RUNZEL #26 GAUGE, CODE 415, 24 STRANDS #40 BARE COPPER BRAIDED, WAXED RAYON BRAID. LEADS TO D1 AND P3 ARE #22 STRANDED TINNED COPPER, TWO COTTON WAXED BRAID, INDIVIDUALLY SHIELDED WITH 1/8 COPPER BRAID AND CABLED IN #4 BLACK SATURATED SLEEVING. OTHER WIRING IS #22 SOLID TINNED COPPER, TWO COTTON WAXED BRAID.

UNLESS OTHERWISE SPECIFIED
DECIMAL DIMENSIONS ± .005"
FRACTIONAL DIMENSIONS ± 1/64"
ANGULAR DIMENSIONS ± 1°

CHANGES
ISSUE NO. 1 8-15-44

5032.12
PA-7505A Amplifier

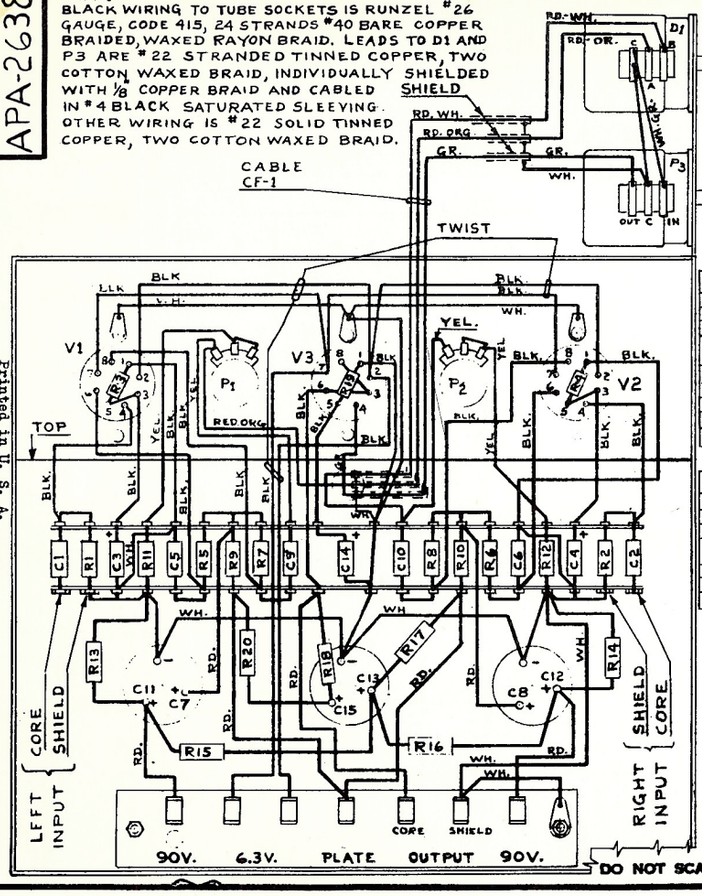

DESIG.	DESCRIPTION	MOTIO. PT. NO.
C1,C2,C9,C10	.05MF. 600V. TYPE "TA" CONDENSER	MA-2642
C3, C4, C14	25MF. 50V. "	MA 2640
C5, C6	.25MF. 200V. "	PA-2640
(C7-C11),(C8-C12) (C13-C15)	8-8MF. 475V. "	MA-2641
D1	IRC AT-102 SWITCH	PA-2522
P1, P2	1-MEG. MALLORY MR53 POTENTIOMETER	PA-2650
P3	IRC AT-101 500M.V.C. "	PA-2521
V1 V2 V3	6SJ7 VAC. TUBE	
CF-1	VOL. CONTROL CABLE FORM	PA-2652

DESIG.	DESCRIPTION	MOTIO. PT. NO.
P1, R2	150,000 OHM 1/2 WATT RESISTOR	PA-2645
R3, R4	1,000 " " " "	PA-2641
R5, R6	500,000 " " " "	MA-2535
R7, R8, R13, R14 R15, R16, R18	100,000 " " " "	MA-2534
R9, R10, R17, R20	20,000 " " " "	PA-2643
R11, R12	30,000 " " " "	PA-2644
R19	3,500 " " " "	PA-2642

TITLE
PA-7505-A
AMPLIFIER
WIRING DIAGRAM

MATERIAL ____ FINISH ____

DRAWN	CHKD.	APPVD.	DATE
H.M.C.	R.T.	[illegible]	8-15-44

DRWG. NO. APA-2638

MOTIOGRAPH
CHICAGO, ILL.

DO NOT SCALE DRAWING

Printed in U. S. A.

ALTEC SERVICE CORPORATION

LMA-2650

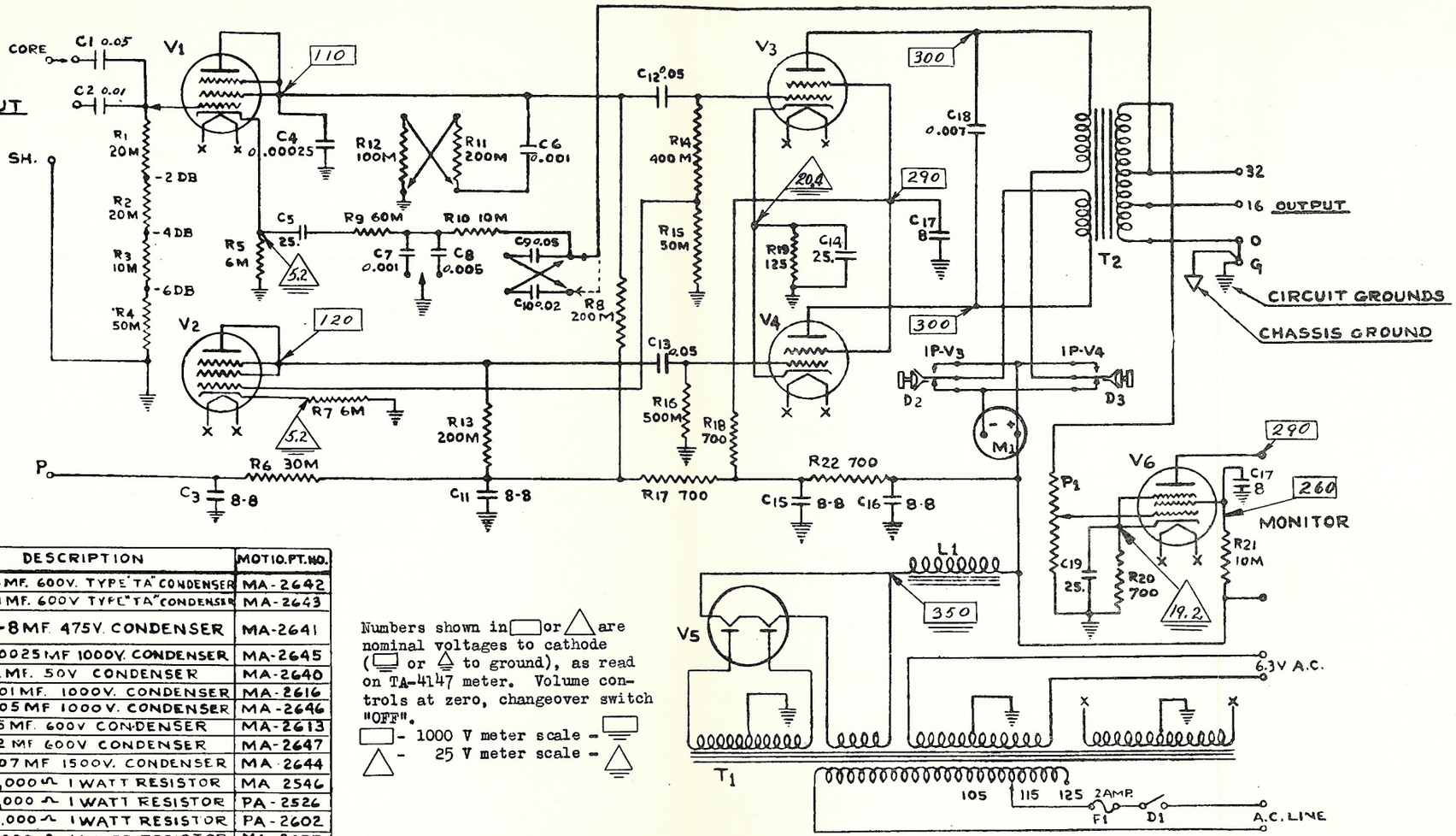

DESIG.	DESCRIPTION	MOTIO. PT. NO.
C1, C12, C13	0.05 MF. 600V. TYPE "TA" CONDENSER	MA-2642
C2	0.01 MF. 600V TYPE "TA" CONDENSER	MA-2643
C3, C11, C15 C16, C17	8-8 MF. 475V. CONDENSER	MA-2641
C4	0.00025 MF 1000V. CONDENSER	MA-2645
C5, C14, C19	25 MF. 50V CONDENSER	MA-2640
C6, C7	0.001 MF. 1000V. CONDENSER	MA-2616
C8	0.005 MF 1000V. CONDENSER	MA-2646
C9,	0.05 MF. 600V CONDENSER	MA-2613
C10	0.02 MF 600V CONDENSER	MA-2647
C18	0.007 MF 1500V. CONDENSER	MA-2644
R1, R2	20,000 Ω 1 WATT RESISTOR	MA 2546
R3, R10	10,000 Ω 1 WATT RESISTOR	PA-2526
R4, R15	50,000 Ω 1 WATT RESISTOR	PA-2602
R5, R7	6,000 Ω 1 WATT RESISTOR	MA-2655
R6	30,000 Ω 1 WATT RESISTOR	PA-2605
R8 R11, R13	200,000 Ω 1 WATT RESISTOR	MA-2657
R9	60,000 Ω 1 WATT RESISTOR	MA-2656
R12	100,000 Ω 1 WATT RESISTOR	MA-2542
R14	400,000 Ω 1 WATT RESISTOR	MA-2656
R16	500,000 Ω 1 WATT RESISTOR	MA-2659
R17, R18, R22	700 Ω 1 WATT RESISTOR	MA-2654
R19	125 Ω 20 WATT RESISTOR	MA-2651
R20	700 Ω 10 WATT RESISTOR	MA 2652
R21	10,000 Ω 10 WATT RESISTOR	MA 2653
D1	S.P.S.T. TOGGLE SWITCH	MA-2521
D2 D3	PUSH BUTTON SWITCH	MA-2605

Numbers shown in ▭ or △ are nominal voltages to cathode (▭ or △ to ground), as read on TA-4147 meter. Volume controls at zero, changeover switch "OFF".
▭ - 1000 V meter scale - ▭
△ - 25 V meter scale - △

DESIG.	DESCRIPTION	MOTIO. PT. NO.
P1	POTENTIOMETER 200,000 Ω	MA 2525
M1	METER 0-200 MA.	MA 2636
T1	POWER TRANSFORMER T-47868	MA-7028
T2	OUTPUT TRANSFORMER T-47870	MA-2638
L1	CHOKE COIL T-47869	MA-2639
V1, V2	6SJ7 VAC. TUBE	
V3 V4	6L6 G VAC. TUBE	
V5	5Z3 VAC. TUBE	
V6	6K6 VAC. TUBE	
F1	FUSE 2 AMP	MA-2681

NOTES

1. WIRES ENDING THUS ⟶ ARE TO BE CONNECTED IN FIELD AS REQUIRED. SEE INSTALLATION INSTRUCTIONS.

WIRING DIAGRAM DWG. LMA-2649

DO NOT SCALE DRAWING

CHANGES

ISSUE NO. 1 9-15-44 BOTH SECTIONS OF OUT-PUT SECTION BY-PASS FOR V-6 & V-5. NO SCREEN BYPASS WAS SHOWN ON V-6.

ISSUE 2 8-25-44 C1 WAS MA-2613 COND. C9 WAS MA-2642 COND.

ISSUE 3 9-12-44 T-1 WAS MA-2637 CHANGE MADE ON AMP'LS SER. "GJ" AND LATER

ISS: 3A 11-2-45 D.L.D.

TITLE	MA-7505-A AMPLIFIER SCHEMATIC DIAGRAM
MATERIAL	FINISH
DRAWN H M C	CHKD. RN
APPVD. RN	DATE 8-15-44
DRWG. NO.	LMA-2650

MOTIOGRAPH
CHICAGO, ILL.

Printed in U.S.A.

ALTEC SERVICE CORPORATION

LMA-2649

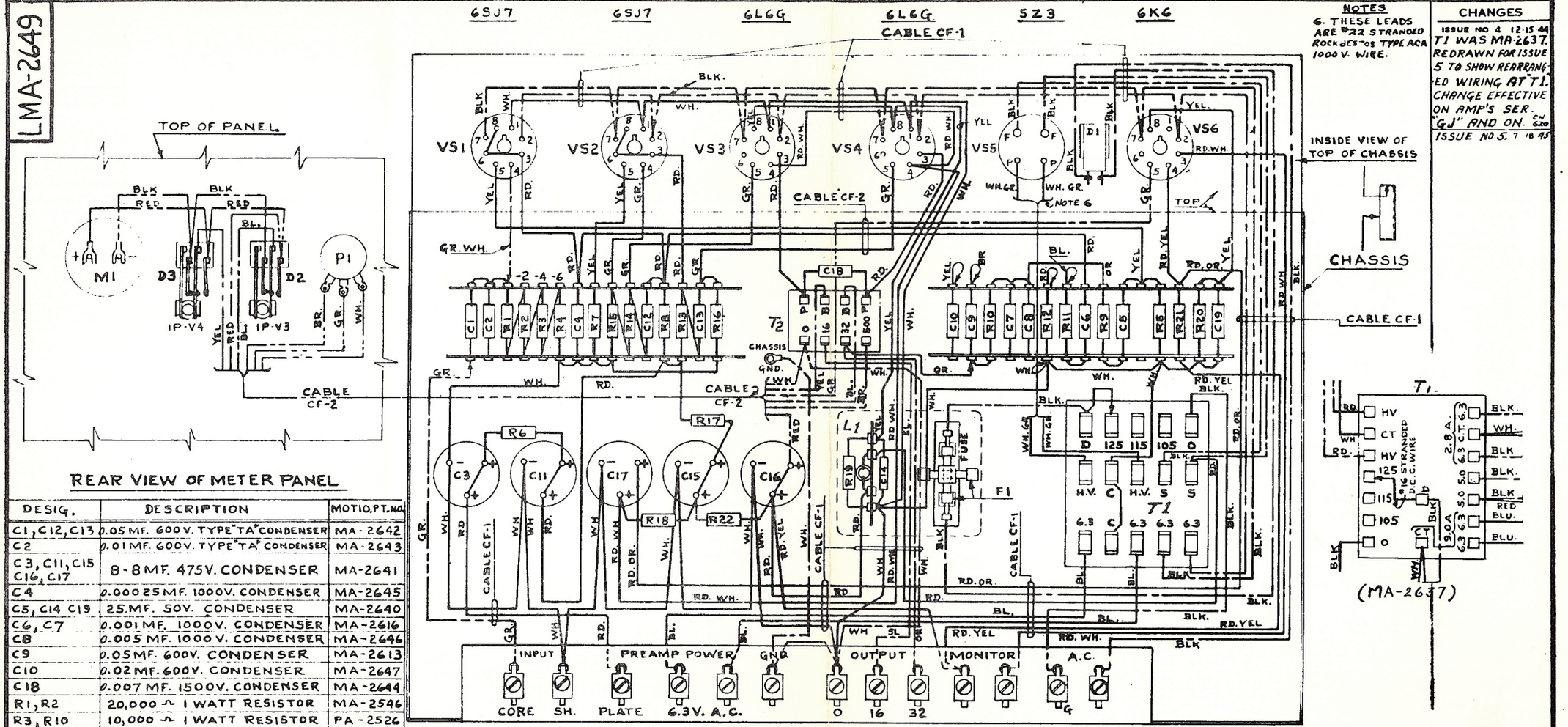

REAR VIEW OF METER PANEL

FRONT VIEW OF CHASSIS

DESIG.	DESCRIPTION	MOTIO.PT.NO.
C1, C12, C13	0.05 MF. 600 V. TYPE "TA" CONDENSER	MA-2642
C2	0.01 MF. 600 V. TYPE "TA" CONDENSER	MA-2643
C3, C11, C15 C16, C17	8-8 MF. 475 V. CONDENSER	MA-2641
C4	0.00025 MF. 1000 V. CONDENSER	MA-2645
C5, C14 C19	25 MF. 50 V. CONDENSER	MA-2640
C6, C7	0.001 MF. 1000 V. CONDENSER	MA-2616
C8	0.005 MF. 1000 V. CONDENSER	MA-2646
C9	0.05 MF. 600 V. CONDENSER	MA-2613
C10	0.02 MF. 600 V. CONDENSER	MA-2647
C18	0.007 MF. 1500 V. CONDENSER	MA-2644
R1, R2	20,000 Ω 1 WATT RESISTOR	MA-2546
R3, R10	10,000 Ω 1 WATT RESISTOR	PA-2526
R4, R15	50,000 Ω 1 WATT RESISTOR	PA-2602
R5, R7	6,000 Ω 1 WATT RESISTOR	MA-2655
R6	30,000 Ω 1 WATT RESISTOR	PA-2605
R8, R11, R13	200,000 Ω 1 WATT RESISTOR	MA-2657
R9	60,000 Ω 1 WATT RESISTOR	MA-2656
R12	100,000 Ω 1 WATT RESISTOR	MA 2542
R14	400,000 Ω 1 WATT RESISTOR	MA 2658
R16	500,000 Ω 1 WATT RESISTOR	MA-2659
R17, R18, R22	700 Ω 1 WATT RESISTOR	MA-2654
R19	125 Ω 20 WATT RESISTOR	MA-2651
R20	700 Ω 10 WATT RESISTOR	MA-2652
R21	10,000 Ω 10 WATT RESISTOR	MA-2653
D1	S.P.S.T. TOGGLE SWITCH	MA-2521
D2, D3	PUSH BUTTON SWITCH	MA-2605

DESIG.	DESCRIPTION	MOTIO.PT.NO.
P1	POTENTIOMETER, 200,000 Ω	MA-2525
M1	METER 0-200 MA.	MA-2636
T1	POWER TRANSFORMER	MA-7028
T2	OUTPUT TRANSFORMER	MA 2638
L1	CHOKE COIL	MA-2639
VS1, VS2 VS3, VS4, VS6	OCTAL SOCKET	PA-2612
VS5	4-PRONG SOCKET	MA-2604
F1	FUSE 2 AMP.	MA-2681
CF-1	MAIN CABLE FORM	MA-2665
CF-2	METER PANEL CABLE FORM.	MA-2[illegible]

NOTES

1. WIRES SHOWN THUS ——— ARE #22 GA. SOLID TINNED COPPER, TWO COTTON WAXED BRAID.
2. WIRES SHOWN THUS ——— ARE #22 GA. STRANDED TINNED, COPPER, TWO COTTON WAXED BRAID.
3. WIRES SHOWN THUS ——— ARE #16 GA. SOLID TINNED COPPER, TWO COTTON WAXED BRAID
4. WIRES ENDING THUS ——→ ARE TO BE CONNECTED IN FIELD AS REQUIRED. SEE INSTALLATION INSTRUCTIONS. WIRES ARE #22 D.C.C. STRANDED.
5. WIRES NOT OTHERWISE SPECIFIED ARE #18 SOLID TINNED BARE COPPER.

NOTES

6. THESE LEADS ARE #22 STRANDED ROCKBESTOS TYPE ACA 1000 V. WIRE.

CHANGES

ISSUE NO 4 12-15-44
T1 WAS MA-2637. REDRAWN FOR ISSUE 5 TO SHOW REARRANGED WIRING AT T1. CHANGE EFFECTIVE ON AMP'S SER. "GJ" AND ON. EN 220
ISSUE NO 5. 7-18-45

SCHEMATIC DIAGRAM DWG LMA-2650

TITLE: MA-7505-A AMPLIFIER WIRING DIAGRAM

MATERIAL ——— FINISH ———

DRAWN	CHKD.	APPVD	DATE
H.M.C.	RCJ	RCJ	8-15-44

DRWG. NO. LMA-2649

MOTIOGRAPH
CHICAGO, ILL.

"ALBARENE" No. 1001 K & E CO., N. Y.
Printed

LMA-2650

CHANGES
ISSUE NO. 6
2-5-54 HUCK

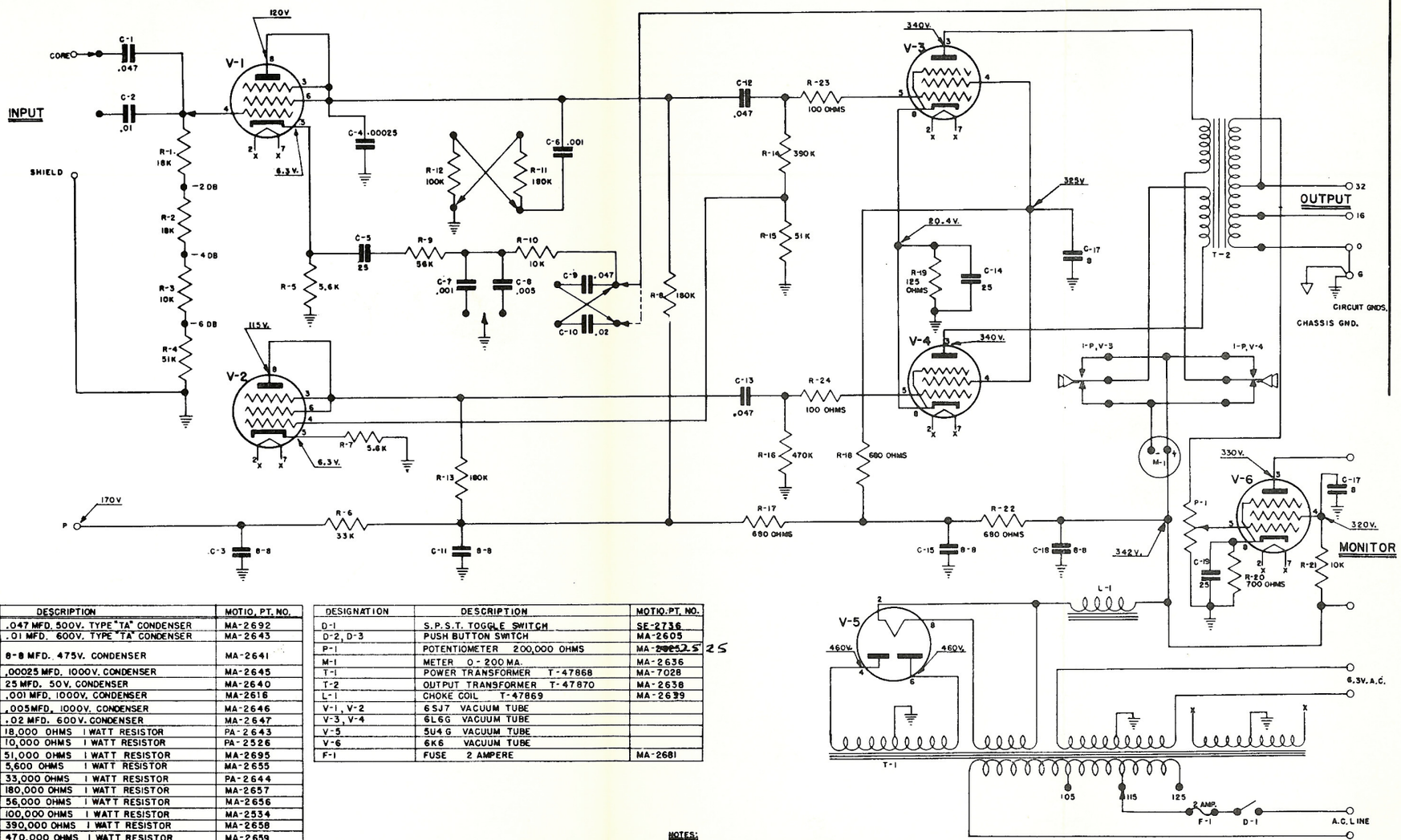

DESIGNATION	DESCRIPTION	MOTIO. PT. NO.
C-1, C-9, C-12, C-13	.047 MFD. 500V. TYPE "TA" CONDENSER	MA-2692
C-2	.01 MFD. 600V. TYPE "TA" CONDENSER	MA-2643
C-3, C-11, C-15, C-16 C-17	8-8 MFD. 475V. CONDENSER	MA-2641
C-4	.00025 MFD. 1000V. CONDENSER	MA-2645
C-5, C-14, C-19	25 MFD. 50V. CONDENSER	MA-2640
C-6, C-7	.001 MFD. 1000V. CONDENSER	MA-2616
C-8	.005 MFD. 1000V. CONDENSER	MA-2646
C-10	.02 MFD. 600V. CONDENSER	MA-2647
R-1, R-2	18,000 OHMS 1 WATT RESISTOR	PA-2643
R-3, R-14	10,000 OHMS 1 WATT RESISTOR	PA-2526
R-4, R-15	51,000 OHMS 1 WATT RESISTOR	MA-2695
R-5, R-7	5,600 OHMS 1 WATT RESISTOR	MA-2655
R-6	33,000 OHMS 1 WATT RESISTOR	PA-2644
R-8, R-11, R-13	180,000 OHMS 1 WATT RESISTOR	MA-2657
R-9	56,000 OHMS 1 WATT RESISTOR	MA-2656
R-12	100,000 OHMS 1 WATT RESISTOR	MA-2534
R-14	390,000 OHMS 1 WATT RESISTOR	MA-2658
R-16	470,000 OHMS 1 WATT RESISTOR	MA-2659
R-17, R-18, R-22	680 OHMS 1 WATT RESISTOR	MA-2654
R-19	125 OHMS 20 WATT RESISTOR	MA-2651
R-20	700 OHMS 10 WATT RESISTOR	MA-2652
R-21	10,000 OHMS 10 WATT RESISTOR	MA-2653
R-23, R-24	100 OHMS 1/2 WATT RESISTOR	MA-2688

DESIGNATION	DESCRIPTION	MOTIO. PT. NO.
D-1	S.P.S.T. TOGGLE SWITCH	SE-2736
D-2, D-3	PUSH BUTTON SWITCH	MA-2605
P-1	POTENTIOMETER 200,000 OHMS	MA-2652.5 25
M-1	METER 0-200 MA.	MA-2636
T-1	POWER TRANSFORMER T-47868	MA-7028
T-2	OUTPUT TRANSFORMER T-47870	MA-2638
L-1	CHOKE COIL T-47869	MA-2639
V-1, V-2	6SJ7 VACUUM TUBE	
V-3, V-4	6L6G VACUUM TUBE	
V-5	5U4G VACUUM TUBE	
V-6	6K6 VACUUM TUBE	
F-1	FUSE 2 AMPERE	MA-2681

NOTES:
1. WIRES ENDING THUS ⟶ ARE TO BE CONNECTED IN FIELD AS REQUIRED. SEE INSTALLATION INSTRUCTIONS.
2. ALL VOLTAGE READINGS GIVEN WERE OBTAINED WITH 20,000 OHMS PER VOLT WESTON METER.

WIRING DIAGRAM DRAWING LMA-2649

TITLE MA-7505-A AMPLIFIER SCHEMATIC DIAGRAM

MATERIAL | FINISH

DRAWN HUCK | CHKD. | APPVD | 2-5-54

DRWG. NO. LMA-2650

MOTIOGRAPH INC. CHICAGO, ILL.

DO NOT SCALE DRAWING

LMA-2650

CHANGES
ISSUE NO. 6
2-5-54 HUCK

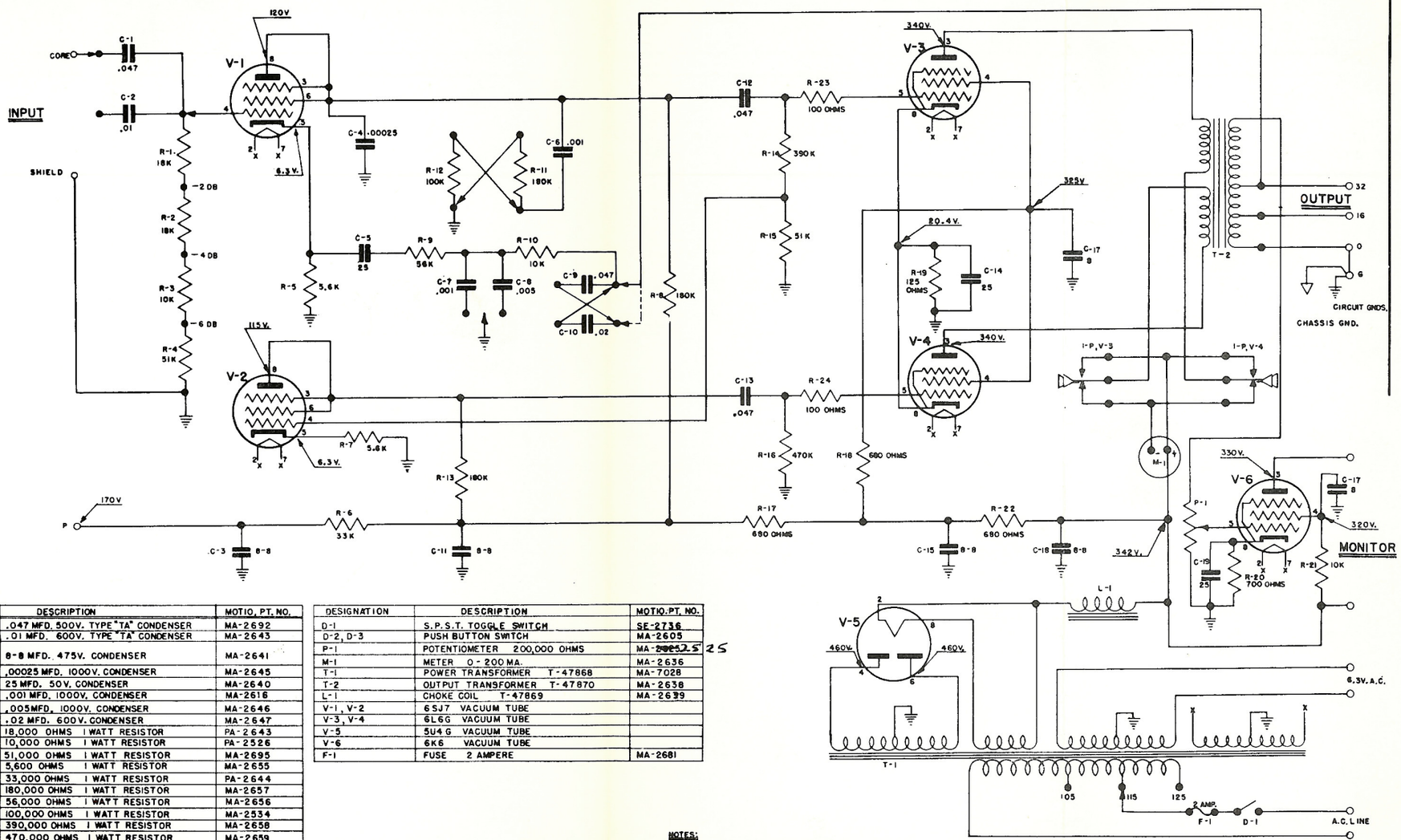

DESIGNATION	DESCRIPTION	MOTIO. PT. NO.
C-1, C-9, C-12, C-13	.047 MFD. 500V. TYPE "TA" CONDENSER	MA-2692
C-2	.01 MFD. 600V. TYPE "TA" CONDENSER	MA-2643
C-3, C-11, C-15, C-16 C-17	8-8 MFD. 475V. CONDENSER	MA-2641
C-4	.00025 MFD. 1000V. CONDENSER	MA-2645
C-5, C-14, C-19	25 MFD. 50V. CONDENSER	MA-2640
C-6, C-7	.001 MFD. 1000V. CONDENSER	MA-2616
C-8	.005 MFD. 1000V. CONDENSER	MA-2646
C-10	.02 MFD. 600V. CONDENSER	MA-2647
R-1, R-2	18,000 OHMS 1 WATT RESISTOR	PA-2643
R-3, R-14	10,000 OHMS 1 WATT RESISTOR	PA-2526
R-4, R-15	51,000 OHMS 1 WATT RESISTOR	MA-2695
R-5, R-7	5,600 OHMS 1 WATT RESISTOR	MA-2655
R-6	33,000 OHMS 1 WATT RESISTOR	PA-2644
R-8, R-11, R-13	180,000 OHMS 1 WATT RESISTOR	MA-2657
R-9	56,000 OHMS 1 WATT RESISTOR	MA-2656
R-12	100,000 OHMS 1 WATT RESISTOR	MA-2534
R-14	390,000 OHMS 1 WATT RESISTOR	MA-2658
R-16	470,000 OHMS 1 WATT RESISTOR	MA-2659
R-17, R-18, R-22	680 OHMS 1 WATT RESISTOR	MA-2654
R-19	125 OHMS 20 WATT RESISTOR	MA-2651
R-20	700 OHMS 10 WATT RESISTOR	MA-2652
R-21	10,000 OHMS 10 WATT RESISTOR	MA-2653
R-23, R-24	100 OHMS 1/2 WATT RESISTOR	MA-2688

DESIGNATION	DESCRIPTION	MOTIO. PT. NO.
D-1	S.P.S.T. TOGGLE SWITCH	SE-2736
D-2, D-3	PUSH BUTTON SWITCH	MA-2605
P-1	POTENTIOMETER 200,000 OHMS	MA-2652.5 25
M-1	METER 0-200 MA.	MA-2636
T-1	POWER TRANSFORMER T-47868	MA-7028
T-2	OUTPUT TRANSFORMER T-47870	MA-2638
L-1	CHOKE COIL T-47869	MA-2639
V-1, V-2	6SJ7 VACUUM TUBE	
V-3, V-4	6L6G VACUUM TUBE	
V-5	5U4G VACUUM TUBE	
V-6	6K6 VACUUM TUBE	
F-1	FUSE 2 AMPERE	MA-2681

NOTES:
1. WIRES ENDING THUS ⟶ ARE TO BE CONNECTED IN FIELD AS REQUIRED. SEE INSTALLATION INSTRUCTIONS.
2. ALL VOLTAGE READINGS GIVEN WERE OBTAINED WITH 20,000 OHMS PER VOLT WESTON METER.

WIRING DIAGRAM DRAWING LMA-2649

TITLE MA-7505-A AMPLIFIER SCHEMATIC DIAGRAM

MATERIAL | FINISH

DRAWN HUCK | CHKD. | APPVD | 2-5-54

DRWG. NO. LMA-2650

MOTIOGRAPH INC. CHICAGO, ILL.

DO NOT SCALE DRAWING

LSS-7540

UNLESS OTHERWISE SPECIFIED
DECIMAL DIMENSIONS ± .005"
FRACTIONAL DIMENSIONS ± 1/64"
ANGULAR DIMENSIONS ±1°

CHANGES
ISSUE NO. 1

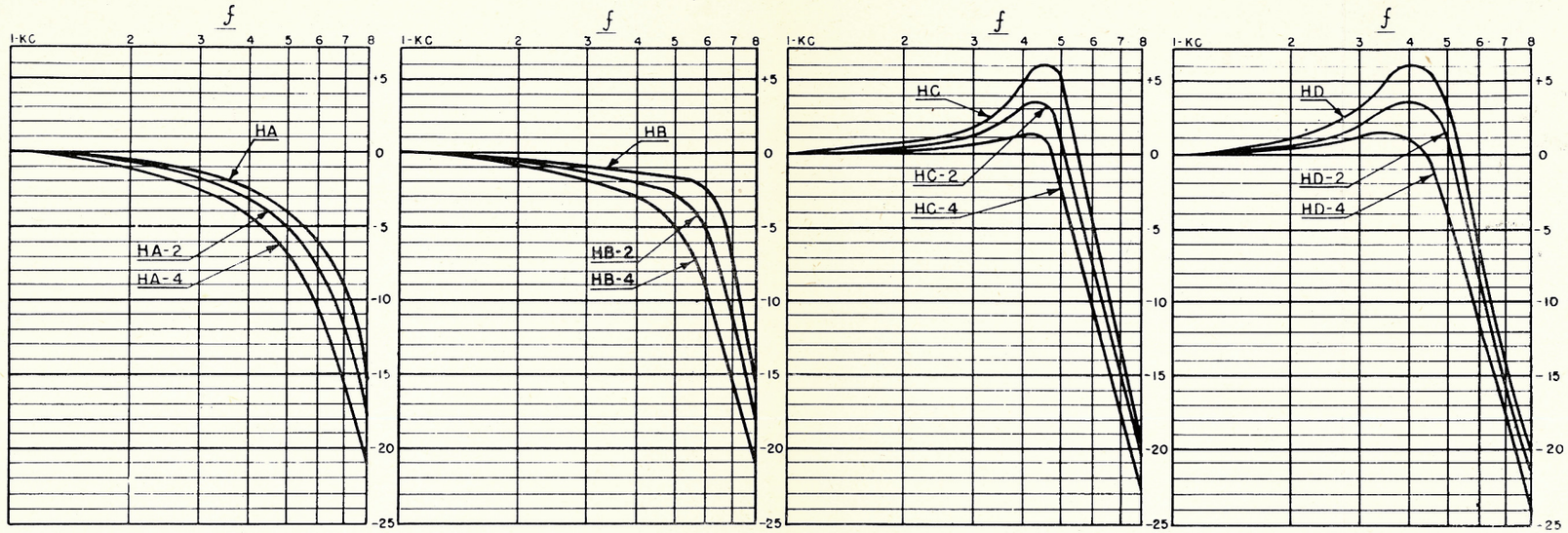

HA— CONNECTIONS TO C-7, C-8, R-11 & R-12 PER LMA-2649 & LMA-2650

HA-1 – SAME, EXCEPT R-11 & R-12 IN SERIES TO GND. FROM C-6 (NOT DRAWN BETWEEN HA-1 & HA-2)

HA-2 – SAME, EXCEPT R-11 ONLY IN SERIES TO GND. FROM C-6

HA-3 – SAME, EXCEPT R-12 ONLY IN SERIES TO GND. FROM C-6 (NOT DRAWN BETEEN HA-2 & HA-4)

HA-4 - SAME, EXCEPT R-11 & R-12 IN PARALLEL TO GND. FROM C-6

HB — SAME AS HA EXCEPT LOWER END C-7 GROUNDED.

HB-1- SAME AS HB EXCEPT R-11 & R-12 IN SERIES TO GND. FROM C-6 (NOT DRAWN)

HB 2- SAME AS HB EXCEPT R-11 ONLY IN SERIES TO GND. FROM C-6

HB-3—SAME AS HB EXCEPT R-12 ONLY IN SERIES TO GND. FROM C-6 (NOT DRAWN)

HB-4 -SAME AS HB EXCEPT R-11 & R-12 IN PARALLEL TO GND. FROM C-6

HC —SAME AS HA EXCEPT LOWER END C-8 GROUNDED

HC-1 – SAME AS HC EXCEPT R-11 & R-12 IN SERIES TO GND. FROM C-6 (NOT DRAWN.)

HC-2 – SAME AS HC EXCEPT R-11 ONLY IN SERIES TO GND. FROM C-6

HC-3 – SAME AS HC EXCEPT R-12 ONLY IN SERIES TO GND. FROM C-6 (NOT DRAWN)

HC-4 - SAME AS HC EXCEPT R-11 & R-12 IN PARALLEL TO GND. FROM C-6

HD — SAME AS HA EXCEPT LOWER ENDS OF BOTH C-7 & C-8 GROUNDED.

HD-1 – SAME AS HD EXCEPT R-11 & R-12 IN SERIES TO GND. FROM C-6 (NOT DRAWN)

HD-2 – SAME AS HD EXCEPT R-11 ONLY IN SERIES TO GND. FROM C-6

HD-3 - SAME AS HD EXCEPT R-12 ONLY IN SERIES TO GND. FROM C-6 (NOT DRAWN)

HD-4 - SAME AS HD EXCEPT R-11 & R-12 IN PARALLEL TO GND. FROM C-6

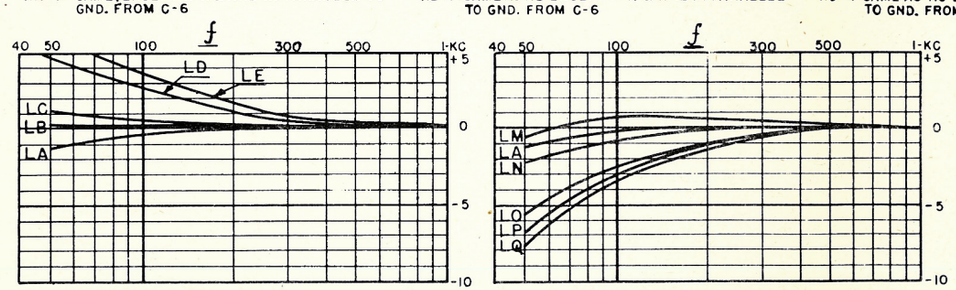

LA— CONNECTIONS TO C-1, C-2, C-9, C-10 PER LMA-2649 AND LMA-2650

LB —C-9 & C-10 PARALLEL IN FEEDBACK CIRCUIT.

LC —C-9 ONLY IN FEEDBACK CIRCUIT.

LD — C-10 ONLY IN FEEDBACK CIRCUIT.

LE —C-9 & C-10 IN SERIES IN FEEDBACK CIRCUIT.

LM– C-9 & C-10 IN SERIES IN FEEDBACK CIRCUIT C-2 SUBSTITUTED FOR C-1 IN GRID CIRCUIT OF V-1

LN — C-10 ONLY IN FEEDBACK CIRCUIT. C-2 IN PLACE OF C-1 IN GRID CIRCUIT.

LO— C-9 ONLY IN FEEDBACK CIRCUIT. C-2 IN PLACE OF C-1 IN GRID CIRCUIT.

LP – C-9 & C-10 PARALLEL IN FEEDBACK CIRCUIT. C-2 IN PLACE OF C-1 IN GRID CIRCUIT.

LQ — C-9 & C-10 SHORTED OUT OF FEEDBACK CIRCUIT. C-2 IN PLACE OF C-1 IN GRID CIRCUIT.

NOTES:

1. THESE CURVES REPRESENT THE AVERAGE SYSTEM FREQUENCY RESPONSE FOR VARIOUS EQUALIZATION CONNECTIONS FROM CONSTANT LEVEL FREQUENCY TEST FILM OF PA AND MA-7505-A AMPLIFIERS OPERATING FROM SH-7500 REPRODUCERS WITH 12' BELDEN NO. 8401 CABLE CONNECTING REPRODUCERS TO PA-7505-A AMPLIFIER AND WITH 20' BELDEN NO. 8401 CABLE BETEEN THIS AMPLIFIER AND THE MA-7505-A AMPLIFIER(S). CURVES WERE TAKEN WITH 16 OHM RESISTANCE LOAD IN PLACE OF SPEAKER NETWORK, AND WITH main VOLUME CONTROL ON STEP 6 AND ALL OTHER GAIN ADJUSTMENTS AT MAXIMUM. FOR 40' OF CABLE BETEEN AMPLIFIERS RESPONSE IS LOWERED APPROXIMATELY 0.5 DB AT 3 KC, 1.5 DB AT 5 KC, 2 DB AT 7 KC, AND 2.5 DB AT 8 KC.

2. CORRECTION FACTORS FOR TRANSMISSION TESTS ARE OBTAINED FROM THESE CURVES BY NOTING THE RESPONSE AT THE DESIRED TEST REEL FREQUENCIES, AND THEN REVERSING THE SIGNS ON THESE VALVES.

DO NOT SCALE DRAWING

ASSOCIATED DRAWINGS

LMA-2649 "MA-7505-A AMPLIFIER WIRING DIAGRAM"

LMA-2650 "MA-7505-A AMPLIFIER SCHMATIC DIAGRAM

TITLE
7505-A TYPE AMPLIFIERS
EQUALIZATION CURVES

MATERIAL		FINISH	
DRAWN H.M.C.	CHKD. R.T.V.	APPVD.	DATE

DRWG. NO. LSS-7540

MOTIOGRAPH
CHICAGO, ILL.

"ALBANENE" NO. 1081 P & E CO., N. Y. C.

Printed in U. S. A.

LWA-2696

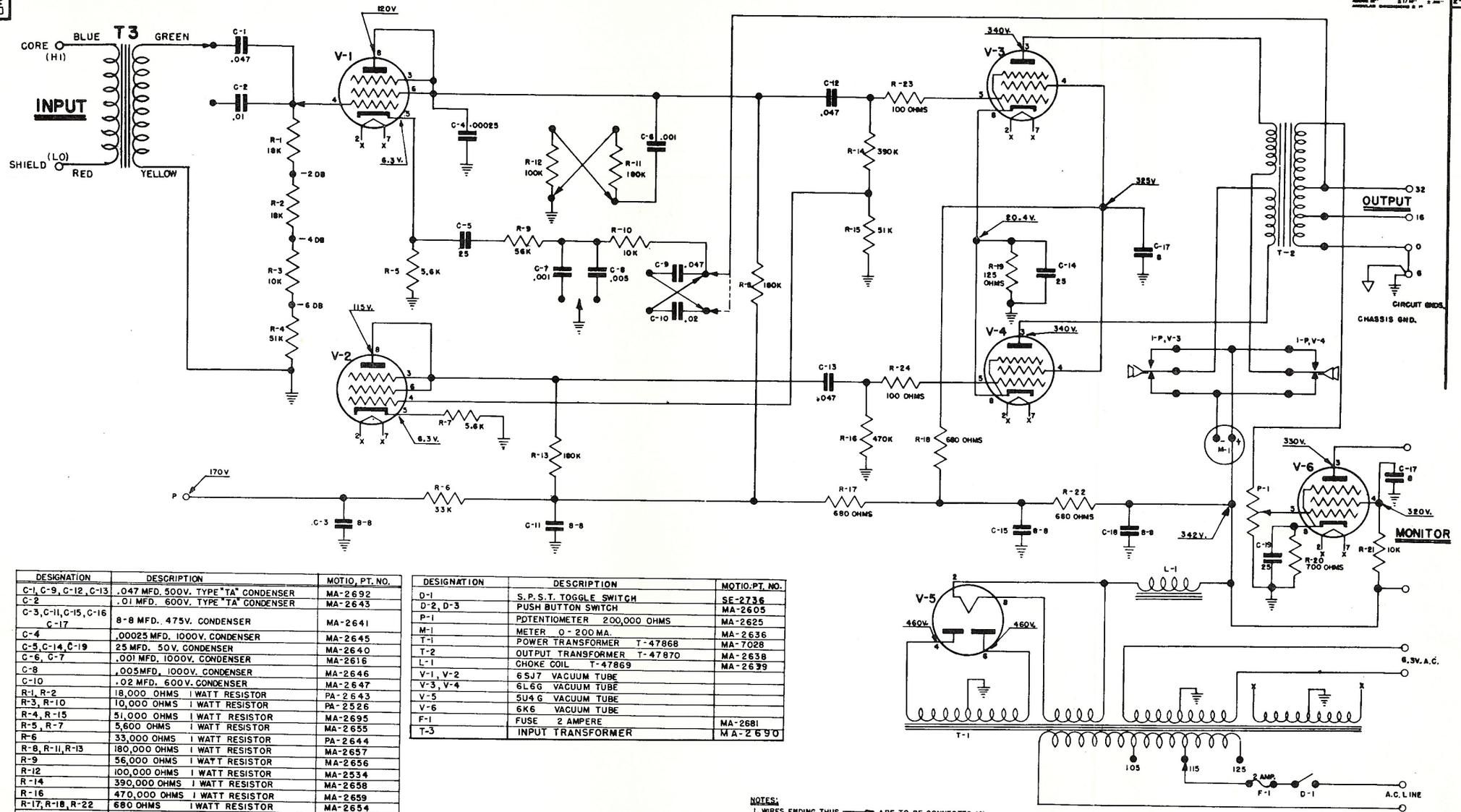

DESIGNATION	DESCRIPTION	MOTIO. PT. NO.
C-1, C-9, C-12, C-13	.047 MFD. 500V. TYPE "TA" CONDENSER	MA-2692
C-2	.01 MFD. 600V. TYPE "TA" CONDENSER	MA-2643
C-3, C-11, C-15, C-16 C-17	8-8 MFD. 475V. CONDENSER	MA-2641
C-4	.00025 MFD. 1000V. CONDENSER	MA-2645
C-5, C-14, C-19	25 MFD. 50V. CONDENSER	MA-2640
C-6, C-7	.001 MFD. 1000V. CONDENSER	MA-2616
C-8	.005 MFD. 1000V. CONDENSER	MA-2646
C-10	.02 MFD. 600V. CONDENSER	MA-2647
R-1, R-2	18,000 OHMS 1 WATT RESISTOR	PA-2643
R-3, R-10	10,000 OHMS 1 WATT RESISTOR	PA-2526
R-4, R-15	51,000 OHMS 1 WATT RESISTOR	MA-2695
R-5, R-7	5,600 OHMS 1 WATT RESISTOR	MA-2655
R-6	33,000 OHMS 1 WATT RESISTOR	PA-2644
R-8, R-11, R-13	180,000 OHMS 1 WATT RESISTOR	MA-2657
R-9	56,000 OHMS 1 WATT RESISTOR	MA-2656
R-12	100,000 OHMS 1 WATT RESISTOR	MA-2534
R-14	390,000 OHMS 1 WATT RESISTOR	MA-2658
R-16	470,000 OHMS 1 WATT RESISTOR	MA-2659
R-17, R-18, R-22	680 OHMS 1 WATT RESISTOR	MA-2654
R-19	125 OHMS 20 WATT RESISTOR	MA-2651
R-20	700 OHMS 10 WATT RESISTOR	MA-2652
R-21	10,000 OHMS 10 WATT RESISTOR	MA-2653
R-23, R-24	100 OHMS 1/2 WATT RESISTOR	MA-2688

DESIGNATION	DESCRIPTION	MOTIO. PT. NO.
O-1	S.P.S.T. TOGGLE SWITCH	SE-2736
D-2, D-3	PUSH BUTTON SWITCH	MA-2605
P-1	POTENTIOMETER 200,000 OHMS	MA-2625
M-1	METER 0-200 MA.	MA-2636
T-1	POWER TRANSFORMER T-47868	MA-7028
T-2	OUTPUT TRANSFORMER T-47870	MA-2638
L-1	CHOKE COIL T-47869	MA-2639
V-1, V-2	6SJ7 VACUUM TUBE	
V-3, V-4	6L6G VACUUM TUBE	
V-5	5U4G VACUUM TUBE	
V-6	6K6 VACUUM TUBE	
F-1	FUSE 2 AMPERE	MA-2681
T-3	INPUT TRANSFORMER	MA-2690

NOTES:
1. WIRES ENDING THUS ——► ARE TO BE CONNECTED IN FIELD AS REQUIRED. SEE INSTALLATION INSTRUCTIONS.
2. ALL VOLTAGE READINGS GIVEN WERE OBTAINED WITH 20,000 OHMS PER VOLT WESTON METER.

ISSUE NO. 6
2-5-54 HUCK

DO NOT SCALE DRAWING

WIRING DIAGRAM DRAWING LMA-2648
MA-7505-T
AMPLIFIER
SCHEMATIC DIAGRAM
DRAWN HUCK
APPR. C.F. 2-54
DRWG. NO. LMA-2696
MOTIOGRAPH INC.
CHICAGO, ILL.

1. DESCRIPTION- The TA-7466 Type Amplifier is a chassis-type preamplifier, with facilities for volume control of, and sound changeover between two suitable inputs; for example, two SH-7500 Reproducers. Electrically it consists of a single stage of amplification for each input, working into a common output stage through individual volume controls and a changeover switch.

2. MOUNTING- The TA-7466 Type Amplifier is intended to be mounted in a suitable housing such as the PA-7500 or PA-7015 Cabinet, mounted between the two projectors on the projection room front wall. These housings usually have as associated apparatus a set of extension rods, couplings, and knobs for extending the changeover switch and right hand input volume control to the right hand projector operating location.

3. CHARACTERISTICS

Gain - 40 db.
Volume Control - 38 db (19 - 2 db steps and OFF)
Impedance - Input - Actual 180,000 ohms. (Works from SH-7500 Reproducer)
Output - Actual 15,000 ohms. (Works into TA-7467/A Amplifier)
Vacuum Tubes - 3 W.E. Type 310-B (Do not use 310-A)
Power Supply Required - 10 VAC, 0.96 amperes; 230 VDC, 0.012 amperes. (From TA-7467/A Amplifier)
Power Supply Furnished - 90 VDC, 10 micro-amperes (For two P.E.C. circuits)
Dimensions - 8-3/4" H. x 9" W. x 5-1/4" D.
Weight - 4-3/4 lbs.

4. TESTING PROCEDURE

4.1 Although routine testing will not require that any readings be taken at the output of the TA-7466/A Amplifier, it will be useful to know the proper method of connecting a volume indicator meter.

(a) Connect the meter between ground and the junction of C-1 and R-1 of the associated TA-7467/A Amplifier, or
(b) Connect the meter to the output terminals of the TA-7466/A Amplifier with a 0.05 mf. or greater capacity condenser in series with the high side.

Caution:- Output terminals of the TA-7466/A Amplifier, and input terminals of the TA-7467/A Amplifier are at 230 volts potential with respect to ground. Operate TA-7466/A Amplifier Volume Controls to minimum value before connecting or disconnecting VI meter, to prevent excessive surges to stage speakers.

4.2 Average tube socket voltages and currents, using 20,000 ohm/volt meter, taken with volume controls at zero and changeover switch in the OFF position. DC voltage readings are with respect to tube cathode.

310-B Input tubes	310-B Output tube
E_p - 67 volts (1000 volt scale)	E_p & E_s - 117 volts (1000 volt scale)
E_s - 52 volts (1000 volt scale)	
E_g - 0.45 Volts (10 volt scale)	E_g - 5.9 volts (10 volt scale)

5. MODIFICATIONS - TA-7466 and TA-7467 Amplifiers had frequency responses to conform to Academy recommendations with six feet of #8401 Coaxial Cable installed between reproducers and preamplifiers. Greater cable lengths reduced HF response considerable. There have been instances where the six foot length was insufficient. Modifications were therefore developed to permit the use of twelve foot input cables. These modifications consist of changes in certain condenser values, and amplifiers so modified have the letter "A" added to the usual coding.

5.1 Conversion of TA-7466 Amplifiers to TA-7466-A is accomplished by replacing C-10 (Aerovox 3G-300-7-7 mf) Condenser with a Mallory FPD 450 volt, 20-20 mf condenser. This condenser and its bakelite mounting detwil constitute the ASP-14400 Conversion Parts. In order to make this change proceed as follows:-

(a) Disconnect and remove the Aerovox condenser.
(b) Using the mounting detail as a template, drill two 1/8" holes for mounting the Mallory condenser.
(c) Fasten the mounting detail in place with 6-32 x 1/4" screws and nuts.
(d) Insert the new condenser in the mounting detail and securely lock it in place by twisting its three case lugs.
(e) Connect the white wire to one of the case lugs.
(f) Connect the red wire to one insulated lug.
(g) Connect the two resistors R-8 and R-12 to the other insulated lug.

Note:- Case lugs may touch the amplifier chassis without causing trouble since the white wire is grounded at the amplifier terminal strip.

ASSOCIATED DRAWINGS

WE-7539	TA-7466A Amplifier, Schematic
WE-7540	TA-7466A Amplifier, Wiring Diagram

Issued by
Engineering Department
Printed in U. S. A.

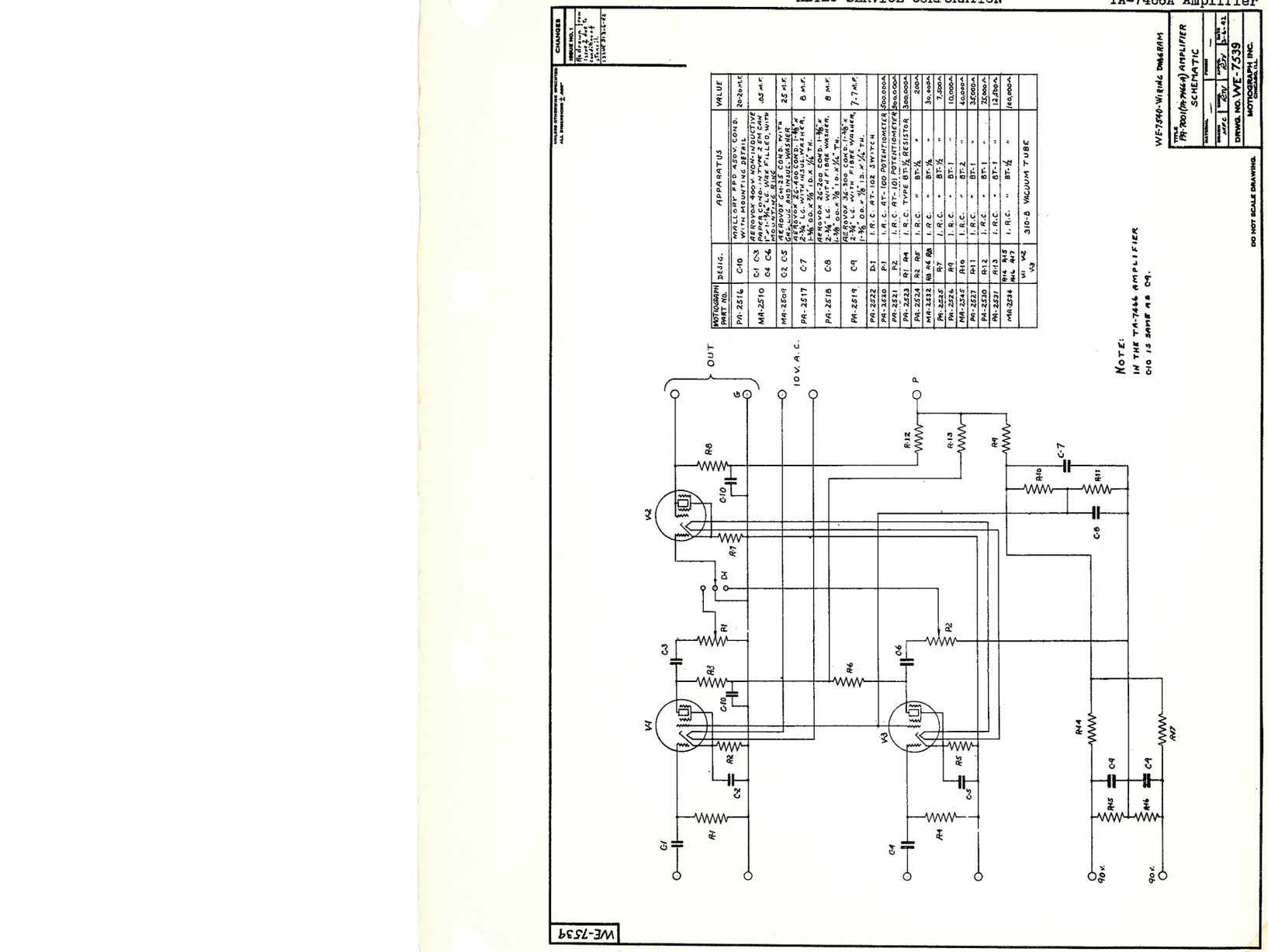

Printed in U. S. A.

TA-7466A Amplifier ALTEC SERVICE CORPORATION

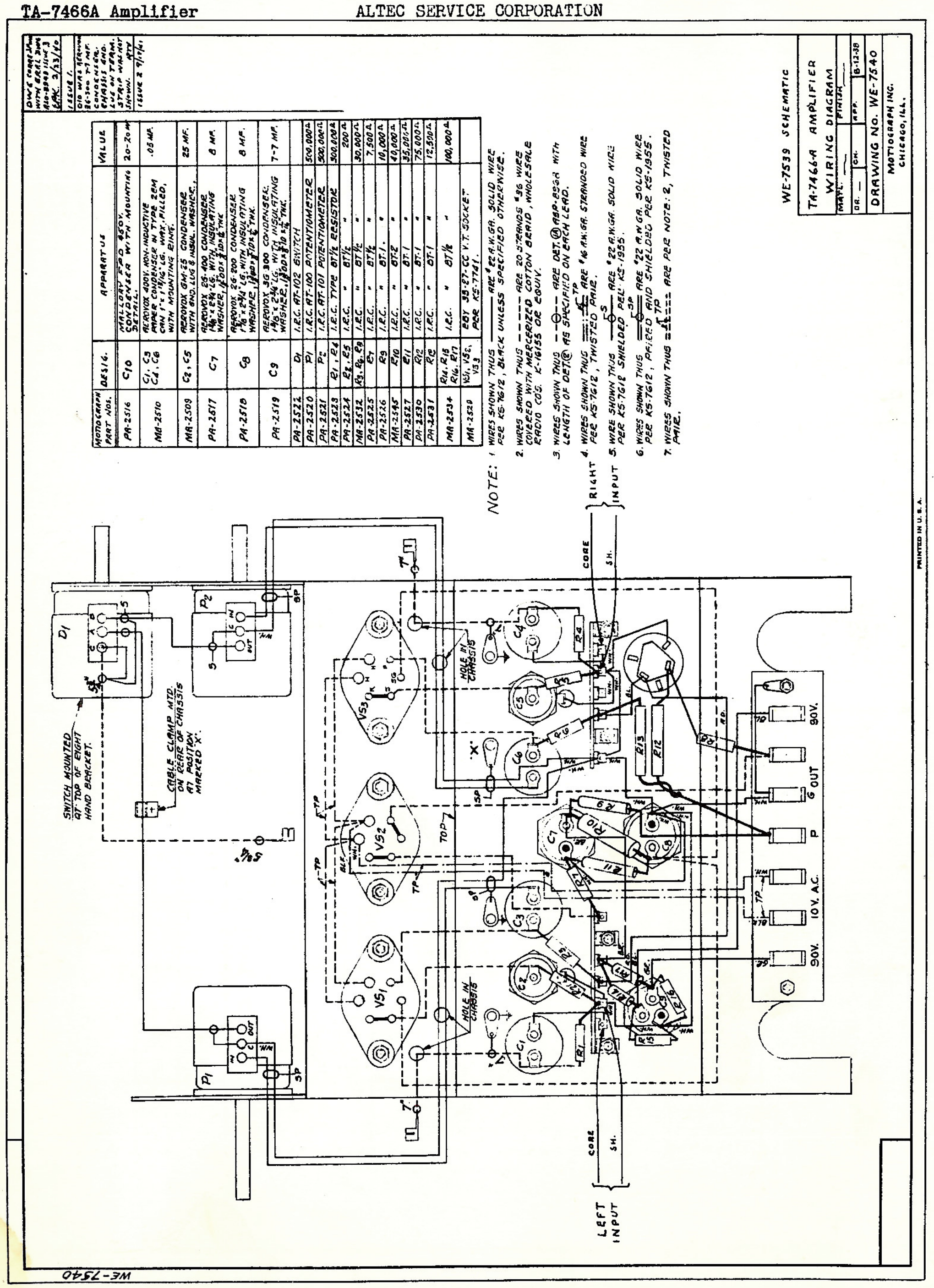

MOTIOGRAPH PART NOS.	DESIG.	APPARATUS	VALUE
PA-2516	C10	MALLORY FPD 450V. CONDENSER WITH MOUNTING DETAIL.	20-20 MF.
MA-2510	C1, C3, C4, C6	AEROVOX 400V. NON-INDUCTIVE PAPER CONDENSER IN TYPE 2EM CAN 1"x 1 13/16" LG. WAX. FILLED, WITH MOUNTING RING.	.05 MF.
MA-2509	C2, C5	AEROVOX GM-25 CONDENSER WITH GND. LUG & INSUL. WASHER.	25 MF.
PA-2517	C7	AEROVOX 25-400 CONDENSER WITH INSULATING WASHER	8 MF.
PA-2518	C8	AEROVOX 25-200 CONDENSER WITH INSULATING WASHER	8 MF.
PA-2519	C9	AEROVOX 3G 300 CONDENSER WITH INSULATING WASHER	7-7 MF.
PA-2522	D1	I.R.C. AT-102 SWITCH	
PA-2520	P1	I.R.C. AT-100 POTENTIOMETER	500,000Ω
PA-2521	P2	I.R.C. AT-101 POTENTIOMETER	500,000Ω
PA-2523	R1, R4	I.R.C. TYPE BT½ RESISTOR	300,000Ω
PA-2524	R2, R5	I.R.C. " BT½ "	200Ω
MA-2532	R3, R6, R8	I.R.C. " BT½ "	30,000Ω
PA-2525	R7	I.R.C. " BT½ "	7,500Ω
PA-2526	R9	I.R.C. " BT-1 "	10,000Ω
MA-2545	R10	I.R.C. " BT-2 "	40,000Ω
PA-2527	R11	I.R.C. " BT-1 "	35,000Ω
PA-2530	R12	I.R.C. " BT-1 "	75,000Ω
PA-2531	R13	I.R.C. " BT-1 "	12,500Ω
MA-2534	R14, R15, R16, R17	I.R.C. " BT½ "	100,000Ω
MA-2528	VS1, VS2, VS3	EBY 38-27-CC V.T. SOCKET PER KS-7741.	

NOTE: 1. WIRES SHOWN THUS ——— ARE #22 A.W.GA. SOLID WIRE PER KS-7612, BLACK UNLESS SPECIFIED OTHERWISE.
2. WIRES SHOWN THUS - - - - ARE 20 STRANDS #36 WIRE COVERED WITH MERCERIZED COTTON BRAID, WHOLESALE RADIO CO'S. K-16155 OR EQUIV.
3. WIRES SHOWN THUS —⊖— ARE DET. (A) ASP-852A WITH LENGTH OF DET.(A) AS SPECIFIED ON EACH LEAD.
4. WIRES SHOWN THUS (TP) ARE #16 A.W.GA. STRANDED WIRE PER KS-7612, TWISTED PAIR.
5. WIRE SHOWN THUS (S) ARE #22 A.W.GA. SOLID WIRE PER KS-7612 SHIELDED PER KS-1955.
6. WIRES SHOWN THUS (SP) ARE #22 A.W.GA. SOLID WIRE PER KS-7612, PAIRED AND SHIELDED PER KS-1955.
7. WIRES SHOWN THUS (TP) ARE PER NOTE: 2, TWISTED PAIR.

1. DESCRIPTION - The TA-7467 Type Amplifier is a three stage resistance coupled, negative feedback, amplifier, incorporating facilities for varying the frequency response of a sound system.

2. MOUNTING - TA-7470 or unit type cabinet.

3. CHARACTERISTICS -

Gain- 55 db.
Volume Control- 10 db continuously variable with an external 20,000 ohm variable resistor connected to "VOL. CONTROL" terminals. (Strap these terminals if remote volume control is not installed. Leaving terminals open causes a 10 db loss in gain and some loss in HF response).
10 db fixed. (Tapped grid resistor in V-1 stage).
Impedance- Input- Actual - 100,000 ohms. (Works from TA-7466 Type Amplifier)
Output- Actual - Less than 0.25 ohms. Nominal- 12 or 24 ohms.
Power Output- 15 watts, 34 db/.006W. (50-5000 cps - 2% distortion)
Noise Level- -45 db/.006W (open input)
-22 db/.006W (TA-7466 plus TA-7467 Type Amplifiers - full gain)
Monitor Amplifier Stage- Gain - 6 db above main amplifier output.
Power Output- 4 watts, 28.2 db/.006W.
Impedance- Output- High, works into 5500 ohms.
Loudspeaker- TA-7472 (not part of amplifier).
Vacuum Tubes- 3 - 310-B, 2 - 300-B, 1 - 274-A, 1 - 336-A or 6K6GTG with adapter.
Power Supply Required- 105-125 volts, 50-60 cycles, 225 watts.
Power Supply Furnished- 230 VDC, 0.012 amperes, 10 VAC, 0.96 amperes.
Dimensions- 12-1/2" H. x 16-1/2" W. x 8-1/4" D.

4. OPERATING AND TESTING PROCEDURE -

4.1 Normal amplifier operation and satisfactory tube condition is indicated by readings on the panel milliammeter varying not more than plus or minus 25% from the mid-scale or 100% mark. The switch adjacent to the meter (use a coin to operate it) permits the meter to be connected to indicate the plate current in any one of the five main amplifier tubes (monitor amplifier plate current is not metered). The plate current indications in switch position 2 and 3 should not differ by more than 15% for proper operation of the phase inverter stage comprising these two tubes. Plate currents of the two 300-B tubes (switch positions 4 and 5) should not differ by more than 25% for normal amplifier output harmonic content. Under certain line voltage conditions the plate current of V-1 may be considerably above 125% without effect on amplifier performance.

4.2 Average tube socket voltages and currents, using 20,000 ohms/volt meter, taken at zero signal, monitor control OFF. D.C. voltage readings are with respect to cathode, except as noted.

310-B Tube (V-1)
E_p - 175 volts (1000 volt scale)
E_s - 160 volts (1000 volt scale)
E_g - 6.8 volts (10 volt scale)

310-B Tube (V-2)
E_p - 225 volts (1000 volt scale)
E_s - 50 volts (1000 volt scale)
E_g - 0.9 volts (10 volt scale)

310-B Tube (V-3)
E_p - 118 volts (1000 volt scale)
E_s - 118 volts (1000 volt scale)
E_g - 4.0 volts (10 volt scale)

300-B Tubes (V-4 & V-5)
E_p - 345 volts (1000 volt scale)
E_g - 75 volts (1000 volt scale)

274-A Rectifier (V-6)
E_p - 580 volts (1000 volt AC scale, either plate to GND)
E output - 440 volts (1000 volt DC scale, FIL. to GND)

336-A Tube (V-7)
E_p - 240 volts (1000 volt scale)
E_s - 245 volts (1000 volt scale)
E_g - 15.5 volts (50 volt scale)

5. MODIFICATIONS- TA-7466 and TA-7467 Type Amplifiers, had frequency response to conform to Academy recommendations with six feet of #8401 Coaxial Cable installed between reproducers and preamplifier. Greater cable lengths reduced HF response considerably. There have been instances where the six foot length was insufficient. Modifications were therefore developed to permit the use of twelve foot input cables. These modifications consist of changes in certain condenser values, and amplifiers so modified have the letter "A" added to the usual coding.

5.1 For use with TA-7466 Pre-amplifier and six foot Coaxial Cables, the TA-7467-A Amplifier should be changed to TA-7467. This is accomplished by removing condensers C-25 and C-26, and replacing the .001 mf condenser in C-15 position with a .0005 mf condenser.

Issued by
Engineering Department
Printed in U. S. A.

6. TRANSMISSION DATA-

6.1 TA-7466 and TA-7467 Amplifiers.

Equalization Condition**	Correction Factors (DB)							
	55	130	300	1KC	3KC	5KC	7KC	8KC
C-2, C-5 in, C-7 open	-3.0	-1.8	-0.2	0	0	0	0	0
C-2, C-5, C-7 in	-1.4	-0.2	0	0	0	0	0	0
C-2 in, C-5, C-7 shorted	0.7	0.1	0	0	0	0	0	0
C-2 open, C-5, C-7 shorted	1.7	0.3	0	0	0	0	0	0
C-2, C-7 open, C-5 in	-2.7	-2.3	-1.0	0	0	0	0	0
C-2 open, C-5, C-7 in	-1.0	-0.7	-0.1	0	0	0	0	0
C-6 / C-9								
.00025* / open	0	0	0	0	-1.7	-2.0	-1.4	-0.7
.0005* / open	0	0	0	0	-1.1	-0.8	0.5	1.3
.0005* / .001*	0	0	0	0	-1.0	-0.1	1.6	2.8
.001* / open	0	0	0	0	-0.3	1.3	3.6	4.8

6.2 TA-7466-A and TA-7467-A Amplifiers.

Equalization Condition**	Correction Factors (DB)							
	55	130	300	1KC	3KC	5KC	7KC	8KC
C-2, C-5 in, C-7 open	-1.7	-1.7	0.1	0	0	0	0	0
C-2, C-5, C-7 in	-0.1	0.7	1.4	0	0	0	0	0
C-2 in, C-5, C-7 shorted	4.4	2.7	1.8	0	0	0	0	0
C-2 open, C-5, C-7 shorted	5.3	3.1	1.9	0	0	0	0	0
C-2, C-7 open, C-5 in	-0.9	-1.0	0.4	0	0	0	0	0
C-2 open, C-5, C-7 in	0.8	0.9	1.3	0	0	0	0	0
C-6 / C-9 / C-26								
open / open / in	0	0	0	0	-4.7	-6.4	-6.9	-6.6
.00025* / open / in	0	0	0	0	-4.5	-5.9	-6.0	-5.6
.0005* / open / in	0	0	0	0	-3.9	-5.0	-4.4	-3.7
.0005* / .001* / in	0	0	0	0	-3.6	-4.1	-3.2	-2.4
.001* / open / in	0	0	0	0	-2.8	-2.7	-1.5	-0.4
.0005* / open / open	0	0	0	0	-2.0	0.9	1.2	2.6
.0005* / .001* / open	0	0	0	0	-1.3	0.4	3.0	4.4
.001* / open / open	0	0	0	0	-1.8	1.4	4.4	5.9

* These values are obtained by interchanging C-6, C-9, and C-24.

** HF equalization factors include the effect of 20' of #8401 cable between TA-7466 Type and TA-7467 Type Amplifiers.

6.3 SH-7500 Reproducer Sets.

	Correction Factors (DB)							
	55	130	300	1KC	3KC	5KC	7KC	8KC
SH-7500 Repro., SH-2526 Lens, SH-2672 (6-A cell), & 6' #8401 cable.	0	0	0	0	2.3	5.1	8.3	10.0
SH-7500 Repro., SH-2526 Lens, SH-2672 (6-A cell), & 12' #8401 cable.	0	0	0	0	3.0	6.6	10.8	13.0

ASSOCIATED DRAWINGS

WE-7537	TA-7467-A Amplifier, Schematic
WE-7538	TA-7467-A Amplifier, Wiring Diegram

Issued by
Engineering Department
Printed in U. S. A.

WE-7537.

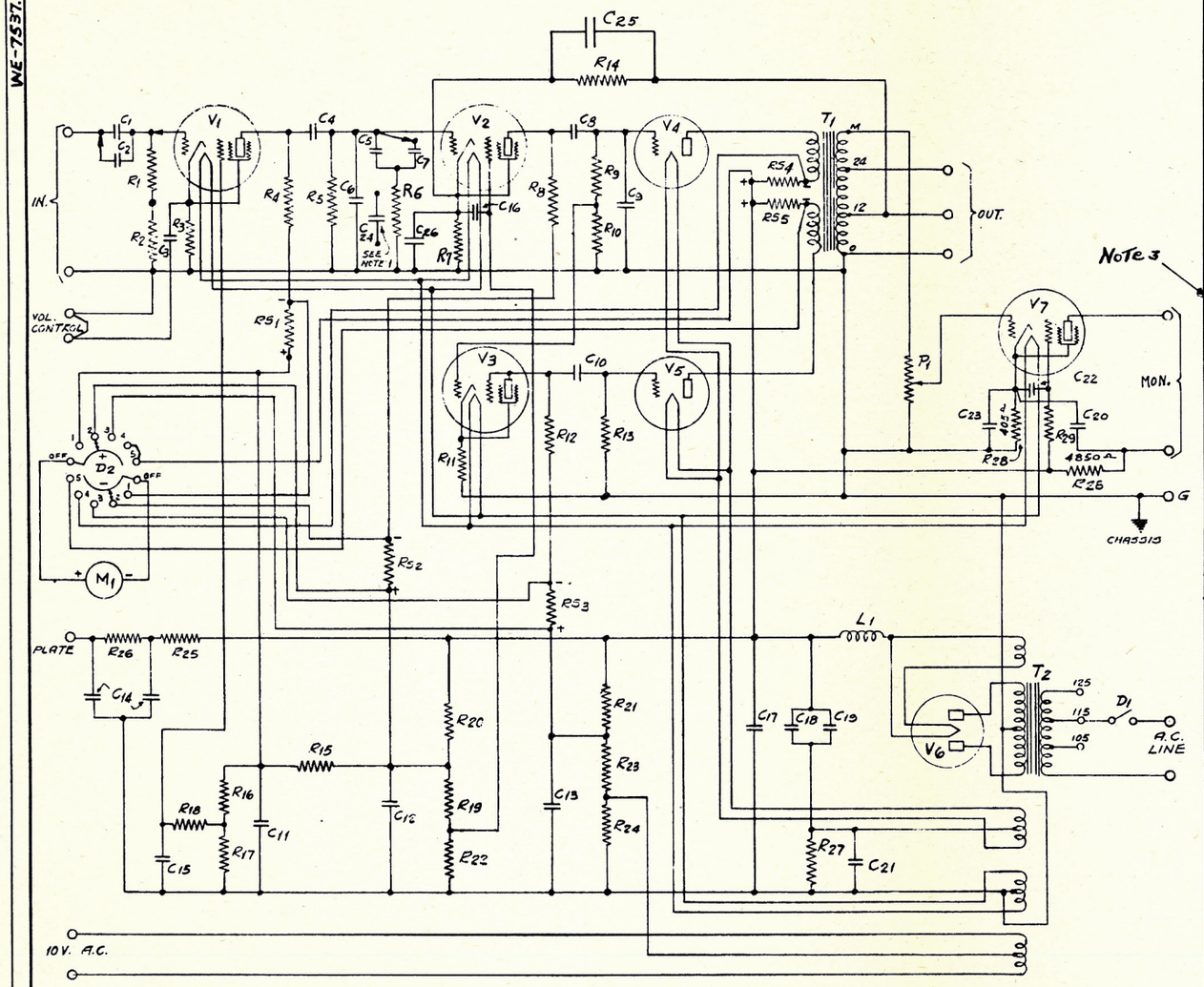

Note 3

MOTIOGRAPH PART No.	DESIG.	APPARATUS	VALUE	
MA-2567	C26	AEROVOX #489 CONDENSER	.025 MF.	*
MA-2519	C16	AEROVOX #684 CONDENSER	.1 MF	
MA-2518	C24	AEROVOX #1467 CONDENSER (SEE NOTE 1)	.00025 MF.	
MA-2508	C1, C2	AEROVOX #684 CONDENSER	.05 MF.	
MA-2509	C3-C23	AEROVOX GM-25 CONDENSER WITH INSULATING WASHER & CAN LUG.	25 MF.	
MA-2510	C4, C8, C10	AEROVOX 400V. NON-IND. PAPER COND. IN TYPE 2EM CAN 1"x1 13/16" x WAX FILLED, WITH MOUNTING RING.	.05 MF.	
MA-2583	C5, C7, C25	AEROVOX #1467 CONDENSER	.01 MF.	*
MA-2584	C9, C15	AEROVOX #1467 CONDENSER	.001 MF.	*
MA-2587	C11, C13	AEROVOX I-450 CONDENSER	16 MF.	
MA-2586	C12	AEROVOX I-475 CONDENSER	8 MF.	
MA-2585	C14	AEROVOX GG-450 CONDENSER WITH INSULATING WASHER & CAN LUG	8-8 MF.	
MA-2567	C6	AEROVOX #1467 CONDENSER	.0005 MF.	*
MA-2516	C17, C18, C19 C20, C22	AEROVOX I-G-8 CONDENSER. 500V. D.C. OPER. VOLTAGE 1 3/8" x 3 1/4" LG. CAN.	8 MF.	
MA-2517	C21	AEROVOX GM-100 CONDENSER WITH INSULATING WASHER & CAN LUG.	25 MF.	
MA-2521	D1	H&H #20992 TUMBLER SWITCH.		
MA-2522	D2	YAXLEY R.L. SINGLE GANG SWITCH PER ASP-8857, ISSUE 3.		
MA-2523	L1	TA-4205 RETARD COIL		
MA-2524	M1	TRIPLETT #223 MILLIAMETER 0-1 MA. PER TRIPLETT N.Y. OFFICE QUOTATION #191.		
MA-2526	P1	I.R.C. TYPE "C" POTENTIOMETER (SEE NOTE 2)	200,000 Ω	±10%
MA-2531	R1, R10	I.R.C. TYPE BT 1/2 RESISTOR	70,000 Ω	
MA-2532	R2	" " BT 1/2 "	30,000 Ω	
MA-2533	R3	" " BT 1/2 "	5,500 Ω	
MA-2534	R4	" " BT 1/2 "	100,000 Ω	
MA-2535	R5, R13	" " BT 1/2 "	500,000 Ω	
MA-2536	R6	" " BT 1/2 "	65,000 Ω	
MA-2531	R12	" " BT 1/2 "	75,000 Ω	
MA-2537	R7, R11, R14	" " BT 1/2 "	3,000 Ω	
MA-2538	R8	" " BT 1/2 "	125,000 Ω	
MA-2539	R9	" " BT 1/2 "	400,000 Ω	
MA-2540	R15	" " BT-2 "	17,000 Ω	
MA-2541	R16	" " BT-2 "	50,000 Ω	
MA-2547	R17	" " BT-1 "	120,000 Ω	
MA-2542	R18	" " BT-1 "	100,000 Ω	
MA-2543	R19	" " BT-2 "	110,000 Ω	
MA-2544	R20, R25, R26	" " BT-2 "	10,000 Ω	
MA-2545	R21	" " BT-2 "	40,000 Ω	
MA-2546	R22	" " BT-1 "	20,000 Ω	
MA-2553	R23	" " BT-2 "	75,000 Ω	
MA-2552	R24	" " BT-1 "	7,500 Ω	
MA-2548	R27	" " M-1191 "	570 Ω	
MA-2549	R28	" " M-1192 "	405-4850 Ω	
MA-2550	R29	" " BT-2 "	25,000 Ω	
MA-2554	R51	DAVEN TYPE "BAW" RESISTOR	33.0 Ω ±1%	
MA-2555	R52	" " "BAW" "	28.4 Ω ±1%	
MA-2556	R53	" " BAW "	13.4 Ω ±1%	
MA-2557	R54, R55	" " BAW "	.256 Ω ±1%	
MA-2505	T1	TA-4206 TRANSFORMER		
MA-2506	T2	TA-4207 "		
	V1, V2, V3	310-B VACUUM TUBE		
	V4, V5	300-A VACUUM TUBE		
	V6	274-A VACUUM TUBE		
	V7	336-A VACUUM TUBE		

DWG. CORRESPONDS WITH E.R.P. DWG. # A50-8952 ISSUE 3. E.K. 1-16-40 APP'D

ISSUE 1. 7-15-41 RTD. CLS & C26 ADDED. C16 WAS .05MF MF. "A" WAS ADDED. MOTIOGRAPH PART No's ADDED.

ISSUE 2 8-30-41 RTJ

M-1 meters may be as shown (Metal Case) or Model 221 (Bakelite Case) or Marion Bakelite Case. Specify type when ordering. In some T-1 transformers internal leads to "B" terminals are reversed causing switch position 4 to read V-5 plate current and vice versa. This may be corrected by reversing Blue & Yellow wires at "B" terminals.

NOTE:

1. THIS CONDENSER IS USED FOR CHANGING THE FREQUENCY CHARACTERISTIC.
2. I.R.C. TYPE "CS" POT. TAPER "C" DIMEN. A 7/8" FLAT DIMS B-1/2, C 5/8". CLOCK-WISE ROTATION LOOKING AT FRONT, NO SWITCH OR LOCATING PIN FURNISH 2 HEX. NUTS.

NOTE:

3.- or GLS-100V-25 MF

* IN TA-7467 AMPLIFIERS C_{25} AND C_{26} WERE OMITTED AND C_{15} WAS .0005 MF.

WE-7538 - WIRING DIAGRAM

ASSOCIATED DRAWINGS

TA-7467A AMPLIFIER

SCHEMATIC

WESTERN ELECTRIC SOUND SYSTEMS

MOTIOGRAPH, INC. CHICAGO, ILL.

DRAWN BY G.L.P. DATE 6-17-35 APP'D

CHECKED BY M-J-B DATE 8-6-39 WJB 12W

SCALE

WE-7537

WE-7537

PRINTED IN U. S. A.

REVISIONS	APP'D
REVISED WITHOUT CIRCUIT CHANGE FROM ERPI ASR-4877-4	
ISSUE 1 7-15-40	RTG
C25 & C26 ADDED C15 WAS .0005 MF "*" NOTE ADDED.	
ISSUE 2 9-15-41.	RTU

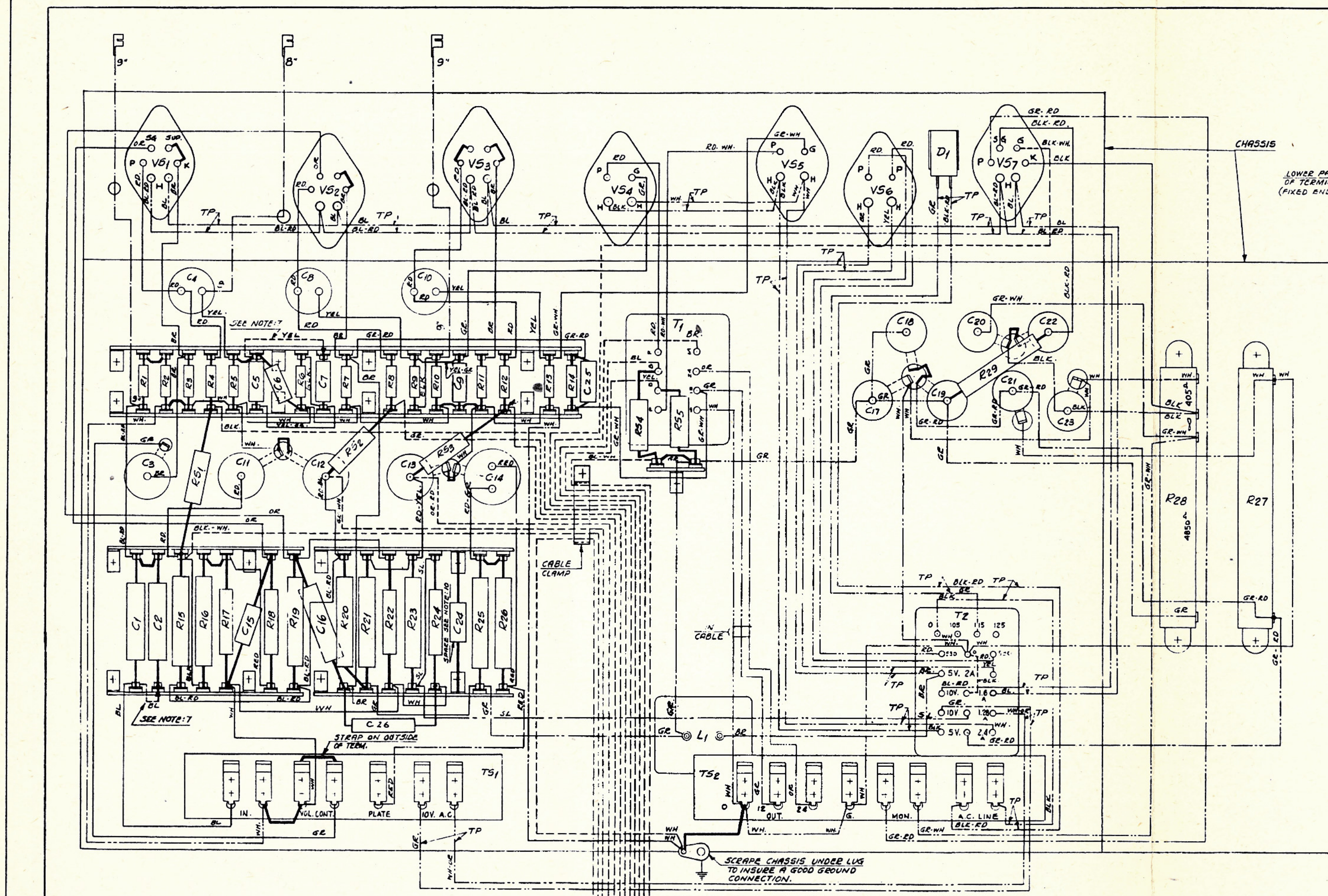

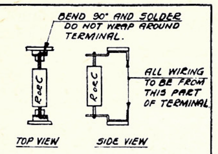

FIG. "C"

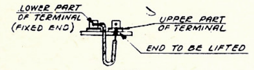

FIG. "D"

NOTE:

1. ALL WIRES TO BE OPEN FORMED UNLESS OTHEWISE SPECIFIED.
2. WIRES SHOWN THUS ——— ARE #22 A.W.GA. SOLID WIRE PER KS-7612 COLOR AS SPECIFIED.
3. WIRES SHOWN THUS - - - - - ARE #22 A.W.GA. STRANDED WIRE PER KS-7612 COLOR AS SPECIFIED.
4. WIRES SHOWN THUS —·—·— ARE (1A) ESA-338610 WITH LENGTH OF (1A) ESA-338570 AS SPECIFIED ON EACH LEAD.
5. WIRES SHOWN THUS —··— ARE #16 A.W.GA. SOLID WIRE PER KS-7612 COLOR AS SPECIFIED.
6. WIRES SHOWN THUS (TP) DENOTE TWISTED PAIR.
7. THESE WIRES TO BE 2½" LONG. SEE FIG. "D" FOR METHOD OF WIRING.
8. WIRES SHOWN THUS ▬▬ ARE #16 A.W.GA. BARE TINNED COPPER WIRE.
9. THESE WIRES TO BE EQUIPPED WITH SUITABLE SPADE TERMINALS.
10. THIS CONDENSER IS USED TO CHANGE FREQUENCY CHARACTERISTICS PER SYSTEM INST. NOTES. MOUNTED IN THE FOLLOWING MANNER: SLIP PIGTAILS OF COND. THROUGH EYELETS AND (a) BEND OVER TOPS OF TERM. STRIPS, DO NOT SOLDER, OR (b) SOLDER IN PLACE WITHOUT BENDING LEADS.

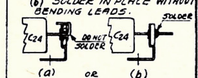

11. HEATER CONNECTIONS OF VS1, VS2, VS3 & VS7 SHALL BE PLACED IN CORNER FORMED BY TOP AND BACK OF CHASSIS.
12. CONDENSER CAN LUGS SHALL BE COVERED WITH BLACK SPAGHETTI FOR FULL LENGTH
13. LOCATIONS OF SMALL I.R.C. RES. AND (#1467 AEROVOX) COND. SHOWN ARE APPROX. AND ARE TO BE LOCATED FOR BEST POSSIBLE ARRANGEMENT IN FINAL ASSEMBLY.
14. PIGTAILS OF THE ABOVE RES. AND COND. SHALL BE CAREFULLY BENT TO AVOID LOOSENING LEAD INSIDE OF UNIT.
15. FOR METHOD OF WIRING RESISTORS AND CONDENSERS TO CINCH TERMINALS SEE FIG. "C".
16. SUFFICIENT SLACK SHALL BE ALLOWED IN WIRING TO TS1 & TS2 TO PREVENT DEFORMING OF TERMINAL STRIP.

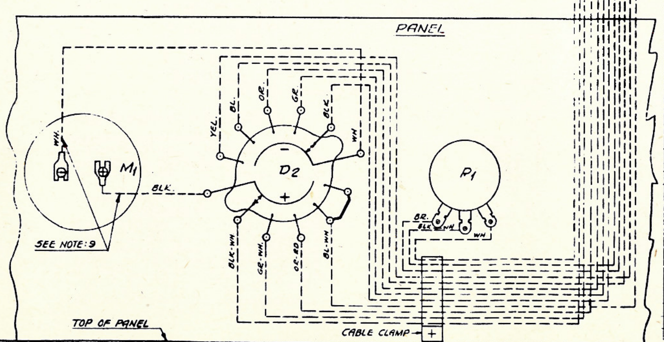

DESIG.	APPARATUS	DESIG.	
C16	AEROVOX #684 CONDENSER	.1 MF.	
C1, C2	AEROVOX #684 CONDENSER	.05 MF.	
C3, C23	AEROVOX GM-25 CONDENSER WITH CAN LUG & FIBRE WASHER 1 O.D. × 49/64 I.D. × 1/16 THK	25 MF.	
C4, C8, C10	AEROVOX 400V. NON-INDUCTIVE PAPER COND. IN TYPE 2EM CAN 1" × 1 13/16" LG. WAX FILLED WITH MTG. RING.	.05 MF	
C5, C7, C25	AEROVOX #1467 CONDENSER	.01 MF.	*
C6	" " "	.0005 MF.	*
C9, C15	" " "	.001 MF.	*
C11, C13	" I-450 "	16 MF.	
C12	" I-475 "	8 MF.	
C14	AEROVOX GG-450 CONDENSER WITH CAN LUG & FIBEL WASHER 1 1/8 O.D. × 7/8 I.D. × 1/16 THK	8-8 MF.	
C17, C18, C19, C20, C22	AEROVOX I-6-8 COND. 300V. D.C. OPER. VOLTAGE, 1 3/8" × 3 1/4" LG. CAN.	8 MF	
C21	AEROVOX GM-100 CONDENSER WITH CAN LUG & FIBRE WASHER 1" O.D. × 49/64 I.D. × 1/16 THK.	25 MF.	
C24	AEROVOX #1467 CONDENSER	.00025 MF.	
D1	H & H #20992 TUMBLER SWITCH		
D2	YAXLEY R.L. SINGLE GANG SWITCH PER ASP-8957-155:3		
C26	AEROVOX #489 CONDENSER	.025 MF.	*
M1	TRIPLETT MODEL 223 METER 0-1 MA PER TRIPLETT N.Y. OFFICE QUOTATION #101.		
P1	(SEE END OF APP. LIST FOR DESCRIPTION)		
R1, R10	I.R.C. TYPE BT½ RESISTOR	70,000 Ω	
R2	" " " "	30,000 Ω	
R3	" " " "	5,500 Ω	
R4	" " " "	100,000 Ω	
R5, R13	" " " "	500,000 Ω	
R6	" " " "	65,000 Ω	

DESIG.	APPARATUS	VALUE
R12	I.R.C. TYPE BT½ RESISTOR	75,000 Ω
R7, R11, R14	" " " "	3,000 Ω
R8	" " " "	125,000 Ω
R9	" " BT½ "	400,000 Ω
R15	" " BT-2 "	17,000 Ω
R16	" " BT-2 "	50,000 Ω
R17	" " BT-1 "	120,000 Ω
R18	" " BT-1 "	100,000 Ω
R19	" " BT-2 "	110,000 Ω
R20, R25, R26	" " BT-2 "	10,000 Ω
R21	" " BT-2 "	40,000 Ω
R22	" " BT-1 "	20,000 Ω
R23	" " BT-2 "	75,000 Ω
R24	" " BT-1 "	7,500 Ω
R27	" " M-1191 "	570 Ω
R28	" " M-1192 "	405-4850 Ω
R29	" " BT-2	25,000 Ω
RS1	DAVEN TYPE BAW RESISTOR	33.0 ± 1%
RS2	" " "BAW" "	28.4 ± 1%
RS3	" " "BAW" "	13.4 ± 1%
RS4, RS5	" " "BAW" "	.256 ± 1.5%
T1	TA-4206 TRANSFORMER	
T2	TA-4207 TRANSFORMER	
VS1, 2, 3, 7	EBY 33-27-C V.T. SOCKET PER KS-7741	
VS4, 5, 6	EBY 33-27-AA V.T. SOCKET PER KS-7741	
P1	I.R.C. TYPE "CS" POT. TAPER "C" WITH DIMENSION A-7/8", FLAT DIMENS B-3/16", C-5/16". CLOCKWISE ROTATION LOOKING AT FRONT. NO SWITCH OR LOCATION PIN. FURNISH WITH 2 HEX. NUTS	200,000 Ω ± 10%
L1	TA-4205 RETARD COIL	

TA-7467-A AMPLIFIER

* IN TA-7467 AMPLIFIERS C25 AND C26 WERE OMITTED AND C15 WAS .0005 MF.

NOTE: SEE WE-7537 FOR MOTIOGRAPH PART NOS. OF COMPONENTS OF TA-7467 AMPLIFIER.

WE-7537 SCHEMATIC

ASSOCIATED DRAWINGS

TA-7467-A AMPLIFIER WIRING DIAGRAM	
WESTERN ELECTRIC SOUND SYSTEMS	
MOTIOGRAPH, INC. CHICAGO, ILL.	
DRAWN BY G.L.P. DATE 9-13-38	APP'D FW
CHECKED BY E.H. DATE 9-14-38	
SCALE ∿	WE-7538

PRINTED IN U.S.A.

M-1 meters may be as shown (Metal Case) or Model 221 (Bakelite Case) or Marion Bakelite Case. Specify type when ordering. In some T-1 transformers internal leads to "B" terminals are reversed causing switch position 4 to read V-5 plate current and vice versa. This may be corrected by reversing Blue & Yellow wires at "B" terminals.

1. GENERAL

1.1 The SE-7628 suppressor amplifier is a control device which can be used in connection with the fourth channel of any standard stereophonic sound system. Its primary function is to make the auditorium speakers inoperative except during the periods when sound is to be reproduced through these speakers.

1.2 The control medium is a 12 KC signal that is recorded along with the sound effects that are to be reproduced. When this control frequency is present it causes the circuit to respond in such a way that the relay contacts transmit the sound to the auditorium speakers. Absence of the control tone causes the relay to operate, this opens the sound circuit from the preamplifier and places 2200 ohms across the primary of the output transformer resulting in no sound or noise being transmitted to the auditorium speakers.

1.3 The circuit also provides considerable attenuation to the 12 KC signal so it will not be heard when the sound effects are being reproduced.

2. INSTALLATION

2.1 The suppressor amplifier contains its own power supply (operated from the 115 volt line) and its installation is simplified as it can be wall mounted.

2.2 The MA-2690 output transformer will couple the unit to any high impedance amplifier (such as the Motiograph MA-7505 series) having one side of the input grounded. With amplifiers having high impedance input transformers, such as the Altec Lansing 1520T and 1530T, the transformer should be by-passed to provide a better impedance match. If the unit is to be used with an amplifier having a 500 ohm input the MA-2690 transformer should be replaced with our SE-3076 transformer.

3. TEST AND ADJUSTMENT PROCEDURE

3.1 Test

3.11 When tubes warm up the relay should operate to its "down position.

3.12 A 12 KC loop (ED-42A) running thru the machine with the preamplifier gain at maximum should cause the relay to release to its "upper" position. The relay should stay in this position while the gain control is backed off 8 - 20 db depending upon position of P3 control and 12 KC response of the preamplifier. The P3 control provides maximum sensitivity when in its clockwise position. It is expected that normal operation will be provided at approximately mid-position.

3.13 With the gain control on maximum the 12 KC signal from the ED-42A loop should not be audible in the auditorium speakers and when measured at the output terminals should be approximately 30 db below the 1 KC level. As ED-42A has a 12 KC signal recorded on track 2, by reversing the loop, the 12 KC signal level may be checked without interference from the 1 KC signal and this reading compared with the 1 KC level obtained by threading the loop in the normal manner.

3.2 Adjustment - See Note

3.21 With AC switch "off" terminate the output with 50,000 ohms.

3.22 Run ED-42A loop (track 2 in position 4).

3.23 With P3 in its midposition, connect meter to the output terminals and adjust C_1, P_1, and P_2, in this order, until a minimum 12 KC reading is obtained. Several individual adjustments must be made to obtain lowest value.

Issued by
Engineering Department
Printed in U. S. A.

ALTEC SERVICE CORPORATION
MOTIOGRAPH
SOUND EQUIPMENT BULLETIN

June 15, 1954

Note:- Amplifiers are adjusted before shipment. Further adjustment should be made only if tests indicate it to be necessary.

ASSOCIATED DRAWING

RSE-7628

Issued by
Engineering Department
Printed in U. S. A.

RSE-7628

UNLESS OTHERWISE SPECIFIED

BASIC DIM.	FRAC.	DEC.
UP TO 6"	±1/128"	± .008"
ABOVE 6" TO 12"	±1/64"	± .016"
ABOVE 12" TO 24"	±1/32"	± .032"
ABOVE 24"	±1/16"	± .063"

ANGULAR DIMENSIONS ± 1°

CHANGES

NONE NO. 1

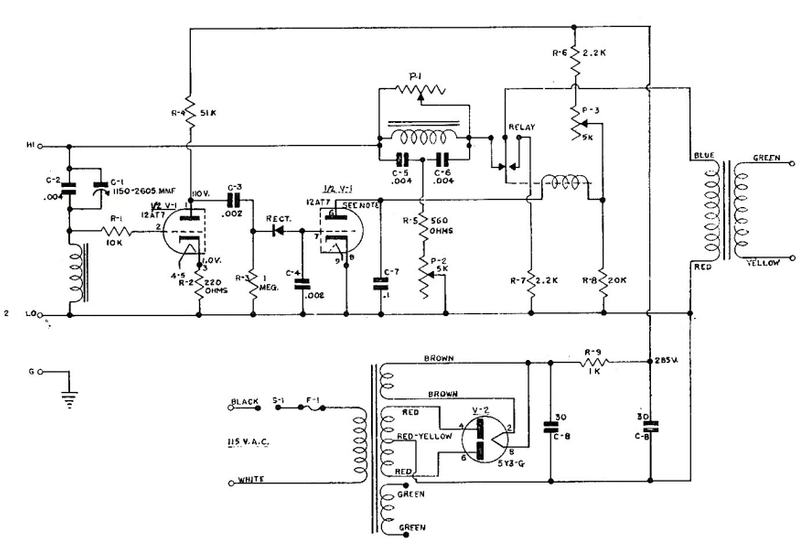

ITEM	PART NO.	DESCRIPTION
C-1	SE-3075	ARCO 313 CAPACITOR, 1150-2605 MMFD
C-2,5,6	SE-3068	.004 MFD. CONDENSER
C-3,4	SE-3069	.002 MFD. CONDENSER
C-7	SE-3081	.1 MFD. CONDENSER
C-8	SE-3072	30-30 MFD. CONDENSER
R-1	PA-2526	10,000 OHMS, 1 WATT RESISTOR
R-2	SE-3077	220 OHMS, 1/2 WATT RESISTOR
R-3	SE-3078	1 MEGOHM, 1/2 WATT RESISTOR
R-4	MA-2695	50,000 OHMS, 1 WATT RESISTOR
R-5	SE-3079	560 OHMS, 1/2 WATT RESISTOR
R6,7	SE-3066	2,200 OHMS, 1 WATT RESISTOR
R-8	SE-3070	20,000 OHMS, 10 WATT RESISTOR
R-9	SE-3080	1,000 OHMS, 1 WATT RESISTOR
L-1	SE-3073	30 MH TOROID INDUCTANCE
L-2	SE-3074	100 MH TOROID INDUCTANCE
V-1		12 AT7 TUBE
V-2		5Y3G TUBE
RECTIFIER	SE-3063	G.E., 1N48
P-1	SE-3065	25,000 OHMS, POTENTIOMETER
P-2,3	SE-3064	5,000 OHMS, POTENTIOMETER
T-1	MA-2690	OUTPUT TRANSFORMER
T-2	SE-3067	POWER TRANSFORMER
RELAY	SE-3071	LS-5 RELAY, 10,000 OHMS
S-1	SE-2736	S.P.S.T. SWITCH
F-1	SE-3082	1 AMPERE FUSE

NOTE:- PLATE CURRENT AND VOLTAGE MEASUREMENTS AT PIN 6 OF 12AT7 TUBE.
125 V. - NO SIGNAL
225 V. - WITH AVERAGE SIGNAL
6 MA. - NO SIGNAL
0 MA. - WITH AVERAGE SIGNAL

TITLE
SE-7628
SUPPRESSOR AMPLIFIER

MATERIAL	FINISH		
DRAWN HUCK	CHKD.	APPVD.	DATE 7-31-54

DRWG. NO. RSE-7628

MOTIOGRAPH INC.
CHICAGO, ILL.

DO NOT SCALE DRAWING

ALTEC SERVICE CORPORATION

SUPPRESSER AMPLIFIER, SE-7628

10M-7/5

Printed in U. S. A.

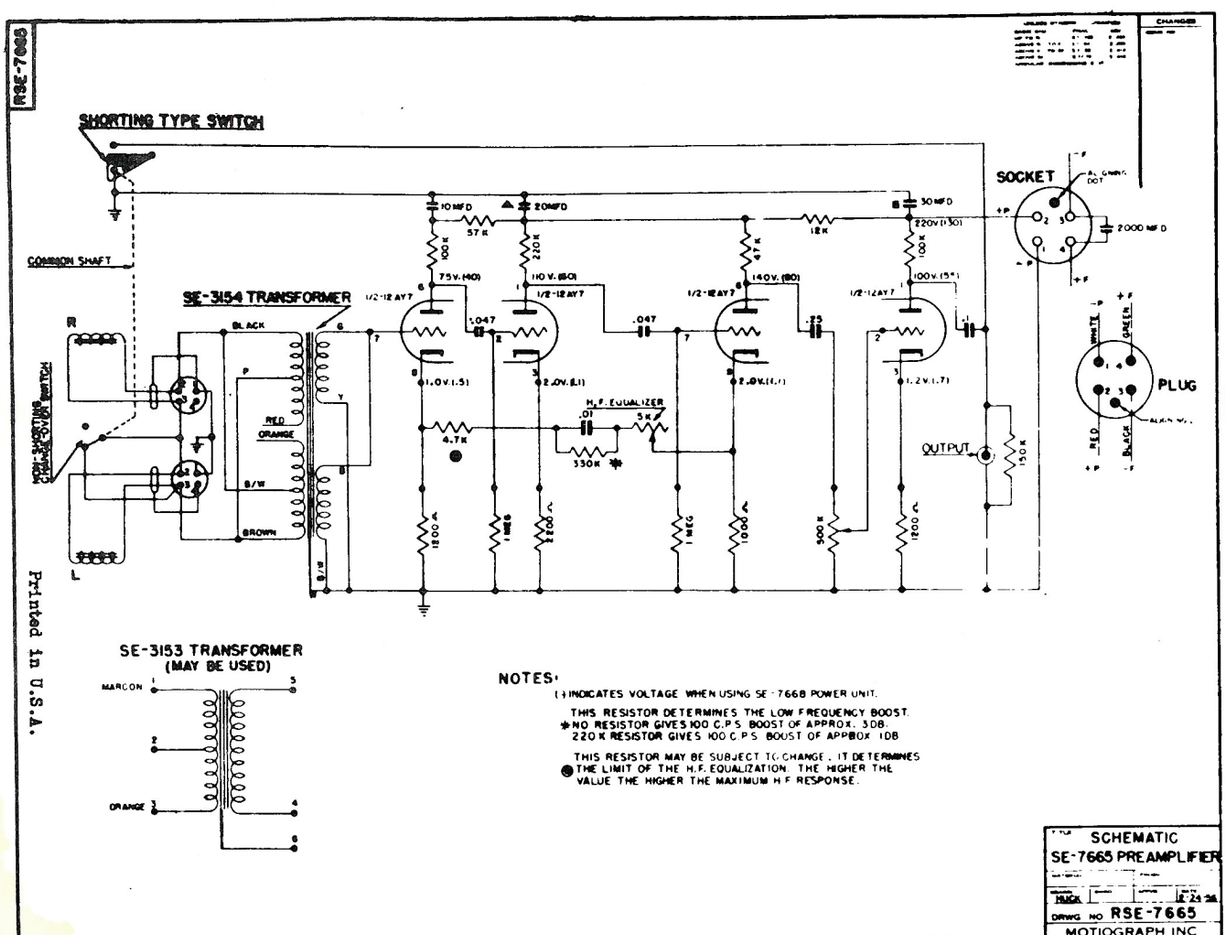

Printed in U.S.A.

ALTEC SERVICE COMPANY

SE-7665 PRE-AMPLIFIER

5034.85

LPA-7025

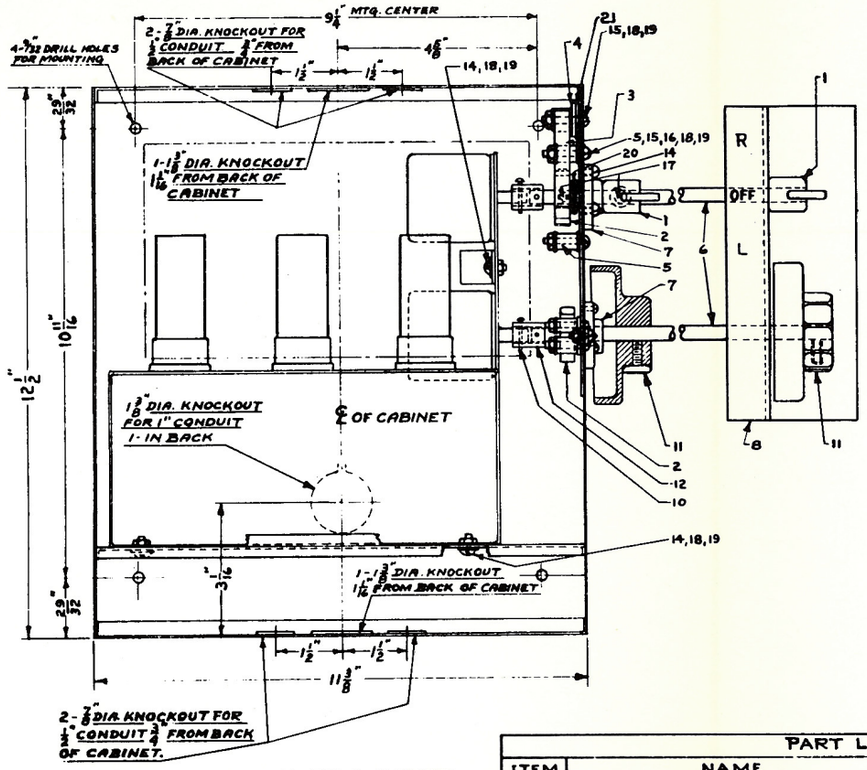

FRONT VIEW WITH COVER REMOVED AND AMPLIFIER IN PLACE

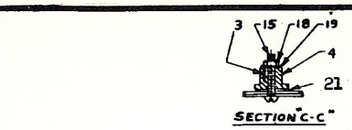

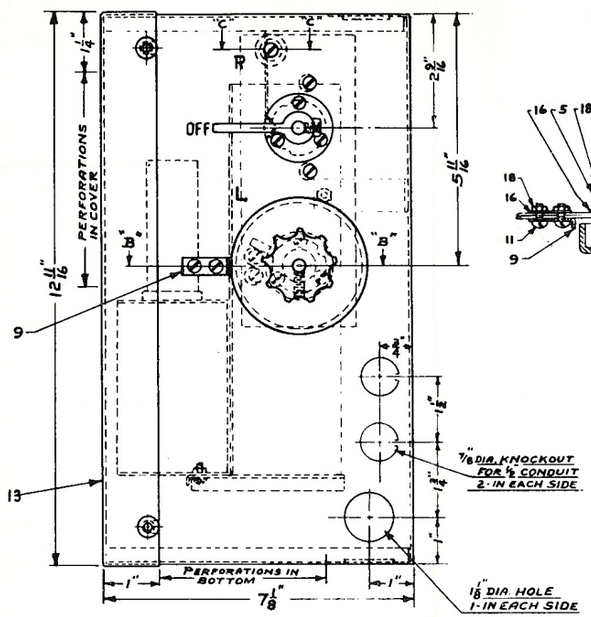

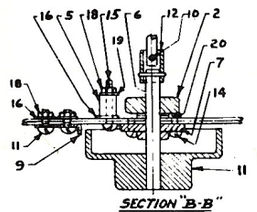

UNLESS OTHERWISE SPECIFIED
DECIMAL DIMENSIONS ± .005"
FRACTIONAL DIMENSIONS ± 1/64"
ANGULAR DIMENSIONS ± 1°

CHANGES
ISSUE NO. 1

PART LIST			
ITEM	NAME	PART NO.	REQ
1	CHANGEOVER LEVER	PA-2500	2
2	DETENT STOP	PA-2501	2
3	DETENT SPRING	PA-2502	1
4	DETENT SPRING HOLDER	PA-2503	1
5	ECCENTRIC STOP BUSHING	PA-2504	4
6	CONTROL ROD	PA-2505	2
7	CHANGE OVER & FADER ROD BEARING	PA-2507	2
8	BEARING BRACKET	PA-2508	1
9	CONTROL KNOB POINTER	PA-2509	1
10	CONTROL ROD COUPLING STUD	PA-2555	2
11	FADER CONTROL KNOB ASSEMBLY	PA-7004	2
12	CONTROL ROD COUPLING ASSEMBLY	PA-7014	2
13	PA-7015 PREAMPLIFIER & CONTROL CABINET	PA-7015	1
14	10-32 x 5/16" R.H.I.M.S.		11
15	10-32 x 1" R.H.I.M.S.		5
16	NO. 1210 SHAKEPROOF LOCKWASHER		6
17	¼"-20 x ⅜" ALLEN HDLESS SET SCREW		4
18	10-32 HEX. I NUT		10
19	NO. 10 STEEL WASHER		8
20	5/16" FLAT STEEL WASHER		4
21	NO. 1222 SHAKEPROOF LOCK WASHER		1
22	¼" ALLEN SET SCREW WRENCH (NOT SHOWN)		1

DO NOT SCALE DRAWING

TITLE
ASSEMBLY, PA-7015 CABINET AND PA-7016 AUXILIARY CONTROLS

MATERIAL	FINISH		
DRAWN H.M.C.	CHKD.	APPVD.	DATE

DRWG. NO. LPA-7025

MOTIOGRAPH
CHICAGO, ILL.

WE-7517

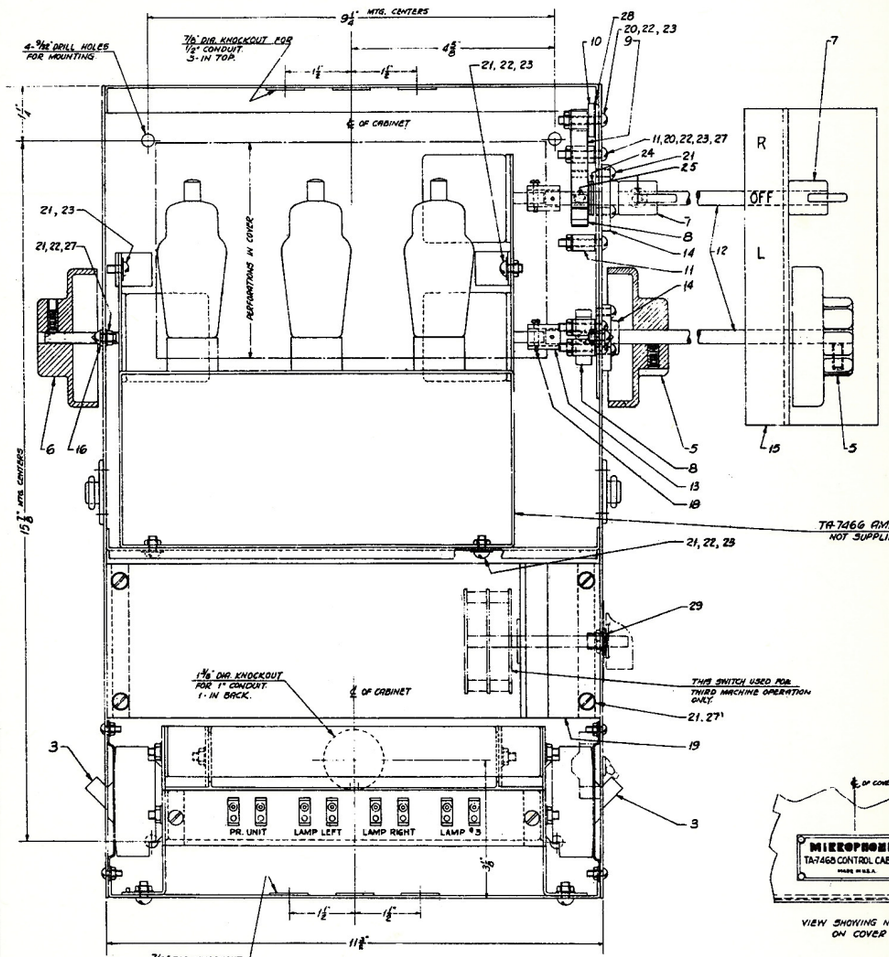

FRONT VIEW WITH COVER REMOVED.

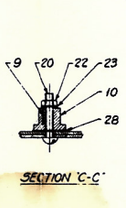

VIEW SHOWING NAMEPLATE ON COVER

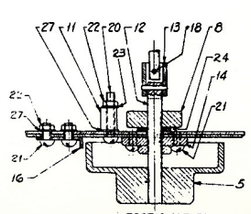

SECTION 'B-B'

SECTION 'C-C'

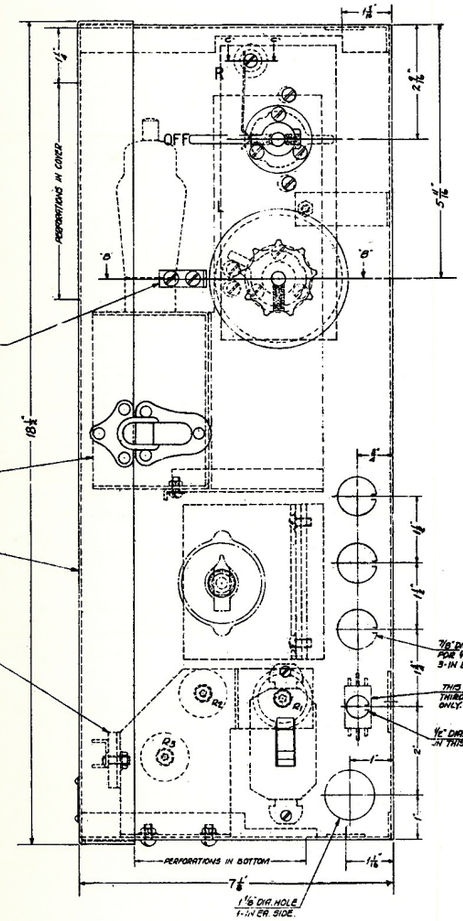

		ITEM	NAME
		35	
		34	
		33	
		32	
		31	
1		30	WRENCH FOR ⅛" ALLEN HOLLOW SET SCREW
1		29	#4580 CINCH ST. PLUG BUTTON (MOUNTING PLATE)
1		28	#1122 SHAKEPROOF LOCKWASHER
12		27	#1810 SHAKEPROOF LOCKWASHER
		26	
4		25	¼-20 × ⅜ ALLEN HOLLOW HD. SET SCREW
4		24	⅜ STD STEEL WASHER, N.P.
9		23	#10(.190) STD STEEL WASHER
12		22	#10(.190)-32 HEX. I. NUT (NICKEL PLATE)
14		21	#10(.190)-32 × ⅜" R.H.M.S.
5		20	#10(.190)-32 × 1" R.H.M.S.
1	PA-7003	19	PANEL (SEE NOTE 2)
2	PA-2255	18	CONTROL ROD COUPLING STUD
		17	
2	PA-1509	16	FADER CONTROL POINTER
1	PA-1508	15	CONTROL BEARING BRACKET
2	PA-1507	14	CONTROL ROD AND FADER BEARING
2	PA-7014	13	CONTROL ROD COUPLING ASS'Y.
2	PA-2505	12	CABINET CONTROL ROD
4	PA-2504	11	ECCENTRIC STOP
1	PA-2503	10	DETENT SPRING HOLDER
1	PA-2502	9	DETENT SPRING
2	PA-2501	8	DETENT STOP
2	PA-1510	7	CHANGE OVER LEVER
1	PA-7008	6	L.H. FADER CONTROL KNOB
2	PA-7009	5	R.H. FADER CONTROL KNOB
REQ.	PIECE	ITEM	NAME

STOCK LIST FOR TA-7469 AUXILIARY CONTROL

NOTE:
1. RESISTORS INCLUDED IN ITEM 2, ARE AS FOLLOWS:
R1 - W.L. 6% L 4.12 Δ DUPLEX VITROHM RESISTOR IN STEPS OF 2.06Δ - 2.06Δ ± 2% TYPE 202 TERMINALS
R2 R3 R4 R5 W.L. 32.94Δ VITROHM RESISTOR IN STEPS OF GREEN - 20.4Δ - 8.2Δ - 8.24Δ ± 2% GREEN CHANNEL WITH TYPE 203 TERMINALS.
2. ITEM 19 AND SWITCHES FOR THIRD MACHINE OPERATION SUPPLIED ONLY WHEN ORDERED.

STOCK LIST FOR TA-7468 CONTROL CABINET

REQ.	PIECE	ITEM	NAME
1	PA-7000	1	CABINET ASSEMBLY
1	PA-7002	2	RESISTOR MTG. BRACKET ASSEMBLY (SEE NOTE 1)
2	PA-2324	3	HEX HEAD 8-32 S.P. KLUM TUMBLER SW. PORCELAIN BASE

TA-7468 CONT. CAB. WITH TA-7469 AUX. CONTROLS ASSEMBLY

DRWG. NO. WE-7517.

PHOTOGRAPH INC. CHICAGO ILL.

PRINTED IN U.S.A.

5150.14

PA-7500 (TA-7468)
Control Cabinet

ALTEC SERVICE CORPORATION
MOTIOGRAPH-MIRROPHONIC SOUND SYSTEM

WE 750S.

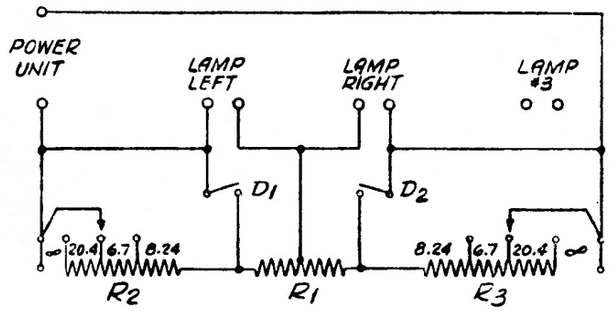

DESIG.	APPARATUS
R1	W.L. 6½"L., 4.12Ω RIBFLEX VITROHM RESISTOR IN STEPS OF 2.06Ω-2.06Ω ±5% TYPE 202 TERMINALS.
R2 & R3	W.L. 8½"L., 35.34Ω VITROHM RESISTOR IN STEPS OF, OPEN-20.4Ω-6.7Ω-8.24Ω ±5% GREEN ENAMEL WITH TYPE 209 TERMINALS.
D1 & D2	H&H #8601 FLUSH TUMBLER SWITCH PORCELAIN BASE WITH BLACK HANDLE

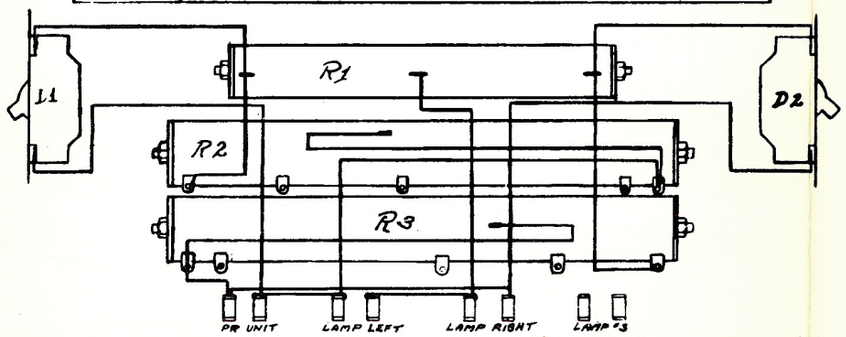

INTERNAL WIRING IS #16 BLACK STRANDED LENZITE, 8FT REQ'D.

DWG. SAME AS E.P.A. ASP-8302 ISSUE 3. E.P.A. 10-10-39.
ISSUE 1. WIRING DIAGRAM ADDED
ISSUE 2. 9/8/41

PA-7500 (TA-7468) CONTROL CABINET
SCHEMATIC AND WIRING DIAGRAM

MOTIOGRAPH INC. CHICAGO ILL.
W.E-7505
PRINTED IN U.S.A.

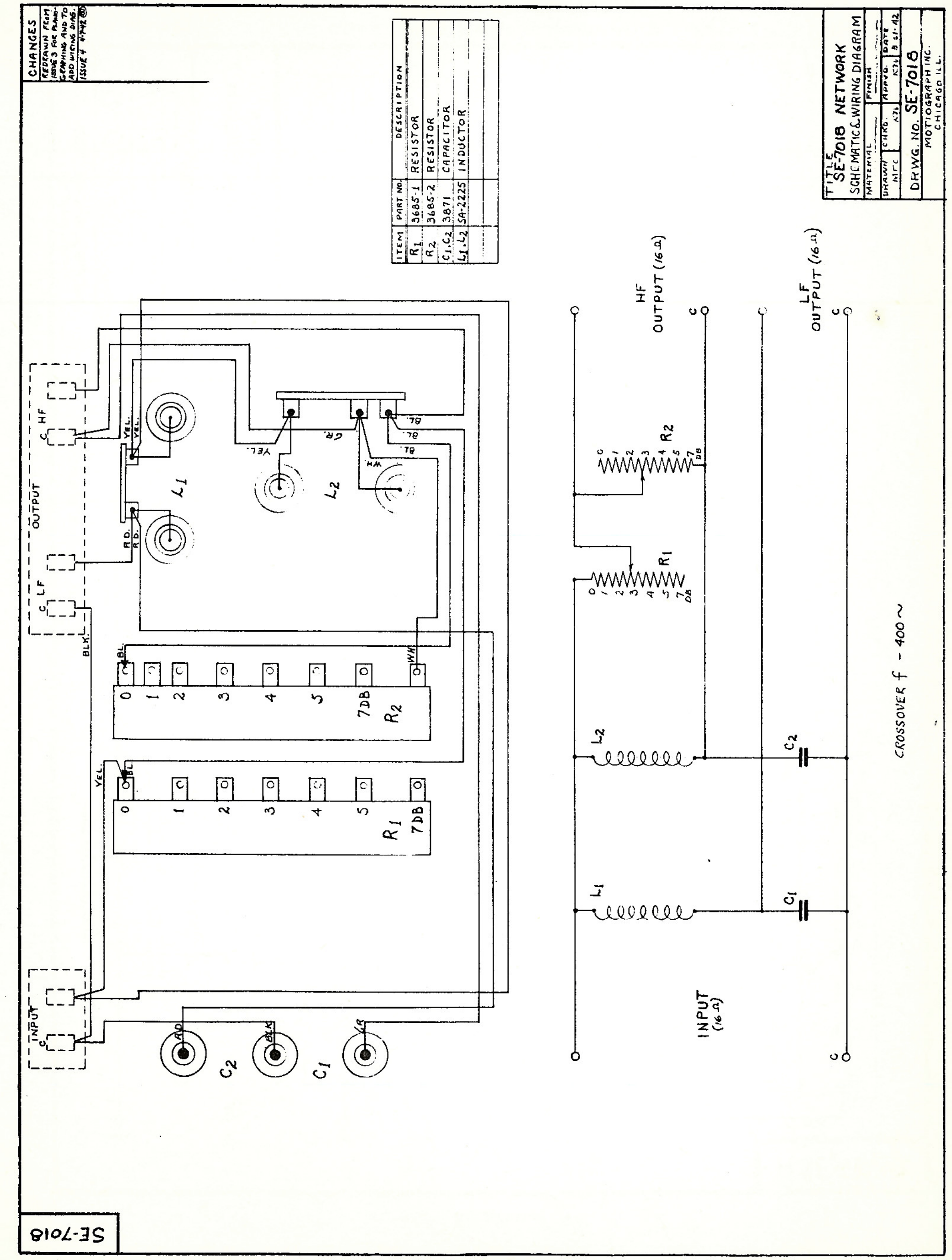
ITEM | PART NO. | DESCRIPTION
R1 | 3685-1 | RESISTOR
R2 | 3685-2 | RESISTOR
C1, C2 | 3871 | CAPACITOR
L1, L2 | SA-2225 | INDUCTOR
TITLE SE-7018 NETWORK
SCHEMATIC & WIRING DIAGRAM
DRWG. NO. SE-7018
MOTIOGRAPH INC.
CHICAGO ILL.
HF OUTPUT (16 Ω)
LF OUTPUT (16 Ω)
INPUT (16 Ω)
CROSSOVER f - 400~
CHANGES
SE-7018

ASE-7038

UNLESS OTHERWISE SPECIFIED
ALL DIMENSIONS ± .005"

CHANGES

ISSUE NO. 1 11-18-40
TITLE WAS "SE-7038 NET-
WORK, SCHEMATIC" WE
DWG. WAS NOT SHOWN.
C4 WAS NOT SHOWN. RE-
DRAWN TO ADD WE.
DIAG. AND TO CONFORM
TO PRODUCTION.
ISSUE 2 - 12-12-40

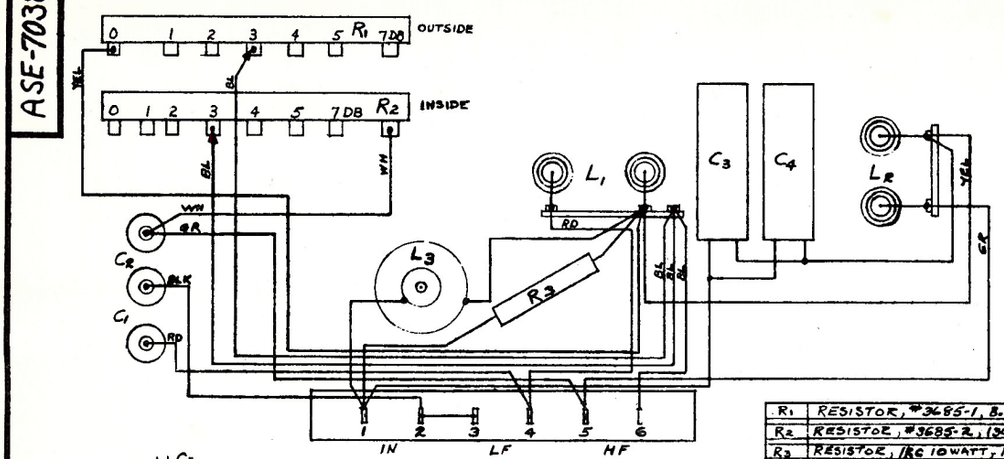

WIRING DIAGRAM

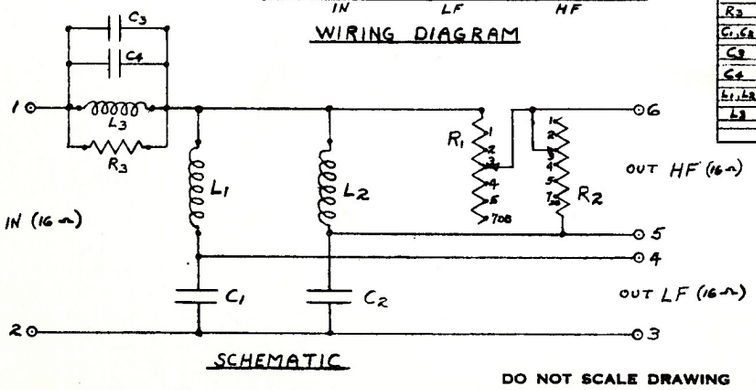

SCHEMATIC

R1	RESISTOR, #3685-1, 8.85 Ω TOTAL.
R2	RESISTOR, #3685-2, (30.5 Ω TOTAL.
R3	RESISTOR, 1RG 10 WATT, 15 Ω
C1, C2	CAPACITOR, #3910
C3	CAPACITOR, 2 MFD, 50 V. A.C.
C4	CAPACITOR, 2 MFD, 50 V. A.C.
L1, L2	INDUCTOR, # SA-2236
L3	COIL, # SA-2363

DO NOT SCALE DRAWING

TITLE SE-7038 NETWORK
SCHEMATIC AND WIRING DIAGRAM

MATERIAL	FINISH		
DRAWN YO	CHKD. [illegible]	APPVD. DV	DATE 12-12-40

DRWG. NO. ASE-7038

MOTIOGRAPH INC.
CHICAGO, ILL.

Printed in U.S.A.

TA-7473 Network — ALTEC SERVICE CORPORATION — TA-7473 Network

WE-7503.

DWG. SAME AS ERR. ASL-13416 ISSUE 1. EAK. 10-10-38
ISSUE 2. REVISED TO AGREE WITH ASL-13416-B. ATTENUATOR NOTE AND NOTE 2 ADDED. ISSUE 2 6-14-40 EAK.

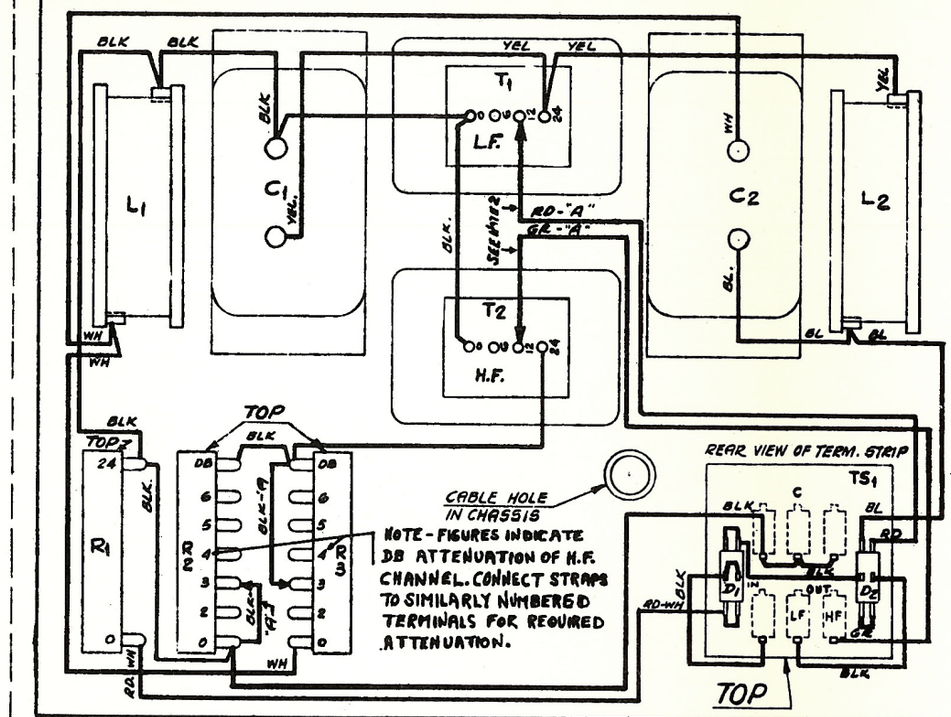

DESIG.	APPARATUS
C1, C2	TA-4209 CONDENSER
L1, L2	RETARD COIL PER ASA-1416
R1	RESISTOR PER ⑫ A50-6887
R2	RESISTOR PER ⑥ A50-6887
R3	RESISTOR PER ⑦ A50-6887
T1, T2	TA-4208 TRANSFORMER
TS1	TERM. STRIP PER ⑭ ASL-13418

NOTE:
1. ALL WIRES TO BE #16 A.W. GA. SOLID WIRE PER K5-7612, EXCEPT WIRES MARKED "A" WHICH ARE FLEXIBLE WIRE PER K5-7612.
2. CONNECT CHANNEL OUTPUT TAPS AS INDICATED IN SYSTEM SCHEMATIC.

PRINTED IN U.S.A.

TA-7473 NETWORK

TRIMMING LINE

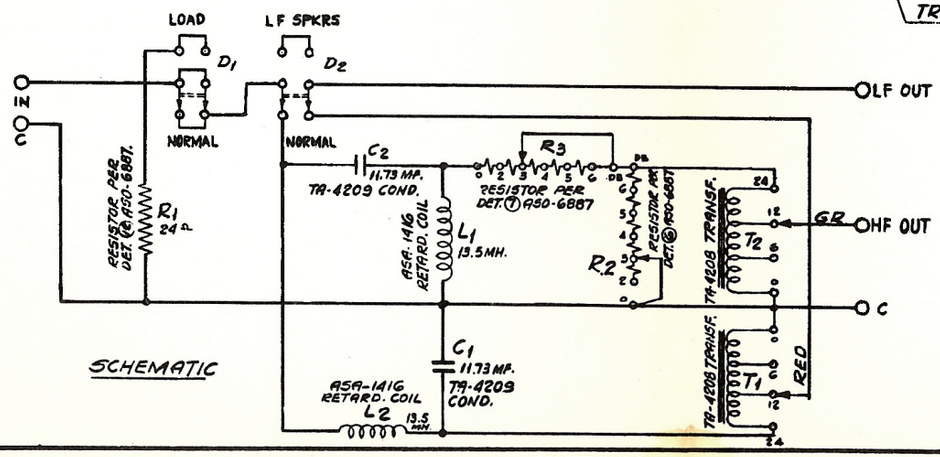

SCHEMATIC

TITLE	TA-7473 NETWORK 400~ DIVIDING NETWORK SCHEMATIC & CCT. LABEL
MATL.	FINISH
DR.	CK. APPVD EAK. DATE 10-10-38.
DRWG. NO.	WE-7503
	MOTIOGRAPH INC. CHICAGO, ILL.

PRINTED IN U. S. A.

1. COMPONENTS AND CHARACTERISTICS

1.1 SE-7038 Network

Crossover frequency	800 cycles
Input impedance	16 ohms
H. F. Output impedance	16 ohms
L. F. Output impedance	16 ohms
H. F. Channel Attenuator	7 db "L" pad
Schematic and Wiring Diagram	ASE-7038
Terminals	Solder type, inside chassis
Overall dimensions	13-1/2" L. x 5-1/2" W. x 7" H.
Weight	9-1/2 lbs.
Finish	Dull black lacquer

1.2 SE-7037 Baffle Assembly

Material	Wood and plywood
Overall dimensions	6'-1 5/8" H. x 8'-3 1/2" W. x 16 7/8" D.
Weight	200 lbs.
Dimensions, bass reflex section	35-1/2" H. x 27-1/2" W. x 16" D. (outside)
Speaker Unit required	(1) 18"
Finish	Flat black casein paint

1.3 SE-7034 L. F. Loudspeaker Unit

Type	18" Electro-dynamic cone
Field Winding, rating	24 volts, 33 watts
Voice Coil impedance	16 ohms at 400 cycles
Terminals	Screw and solder lugs
Overall dimensions	17-7/8" dia. x 10-5/16" D. Mounting bolt circle, 8-17/32" dia. 8 holes 9/32" dia.
Weight	51 lbs.
Finish	Dull black lacquer

1.4 SE-7015 H. F. Loudspeaker Unit

Type	Metal diaphragm, electro-dynamic
Field Winding, rating	24 volts, 20 watts
Voice Coil impedance	16 ohms at 600 cycles
Terminals	Screw and solder lugs
Overall dimensions	7" dia. x 9-3/8" deep (over horn mounting studs)
Weight	21 lbs., 11 oz.
Finish	Dull black lacquer

1.5 SE-7029 H. F. Horn

Type	5 cell, die-cast metal
Mounting	Fits studs on SE-7015 H. F. Unit. Requires SE-7033 Supporting and Tilting Brackets
Finish	Dull black lacquer
Dimensions	15-1/2" W. x 9-9/16" H. x 10-5/8" D.
Weight	13-1/2 lbs.
Distribution	Covers solid angle 45° (vert.) x 90° (horiz.)
Frequency Range	Suitable for 800 cycle crossover systems

1.6 General - The overall dimensions of the assembled SE-7508 Loudspeaker System are 8' 3-1/2" W. x 7' 1-1/2" H. x 18" D. Weight 300 lbs. Sufficient working space (preferably at least 18") should be available at the back of the bass-reflex section of the baffle to permit access to the L.F. Loudspeaker Unit. The loudspeaker system will safely and with low distortion handle up to 25 watts. An external source of D.C., approximately 2 amperes at 24 volts is required for field supply.

2. INSTALLATION

2.1 Assemble the bass-reflex and wing section of the SE-7037 Baffle Assembly per sketch, using the carriage bolts, washers and nuts provided. Use the long (3 x 4) brace with the counterbored holes on the bottom so the complete assembly will rest solidly on the stage floor. The H.F. horn shelf is made in two sections to facilitate phasing. Nail the section with the cleat to the top center wing section of the baffle with cleat to the rear and facing down, and with the edge opposite the cleat flush with the front surface of the baffle. Insert the angle brace between cleat and rear baffle surface and firmly nail it in place.

2.2 Assemble the H.F. Speaker Unit (SE-7015) to the Cellular Horn (SE-7029) and mount the complete

assembly on the remaining horn shelf section, using the SE-7033 Supporting and Tilting Brackets provided. Locate the angle brackets supporting the horn corners near the edge of the shelf so the curved horn mouth will project beyond the edge slightly. Locate the center tilt bracket so as to give the maximum range of tilt. Make certain that the dust cover plate is removed from the high frequency unit before it is bolted to the horn throat.

2.3 Place the assembled L.F. Baffle behind the screen with the front baffle surface as close as possible to the rear screen surface. If screen masking covers the bass-reflex or L.F. Speaker openings, it should not be of heavier material than black scrim cloth. The crossover frequency of the loudspeaker system is 800 cycles, and an appreciable amount of speech energy therefore comes from the L.F. Speaker Unit.

2.4 Place the H.F. Speaker Assembly on the shelf section nailed to the top of the baffle. Slide the assembly so the front edge of the horn mouth is about two inches ahead of the front baffle surface at zero tilt. Then tilt the horn so as to give even distribution of H.F. sound over the auditorium seating area. The nominal coverage of the H.F. Horn is approximately 90° horizontally and 45° vertically. Outside the corresponding solid angle the H.F. coverage diminishes gradually but not sufficiently to require extra horns except in extremely wide or high auditoriums. Final adjustment of tilt and longitudinal positioning of the H.F. Speaker Assembly **for correct phasing** are discussed in section 3.2. Do not fasten the two shelf sections together until these adjustments are completed.

2.5 Remove the rear cover of the bass-reflex section and mount the 18" L.F. Speaker Unit (SE-7034). Handle the unit with care so as to avoid damaging the cone with the mounting bolts.

2.6 The network may be fastened to the baffle in any convenient position, or it may be mounted in a suitable cabinet on the stage wall if local regulations or stage conditions require such protection. In locations where the loudspeaker equipment is never disturbed, it is suggested that the network be placed on a small pad of Ozite, or other soft material, placed on top of the baffle bass-reflex section.

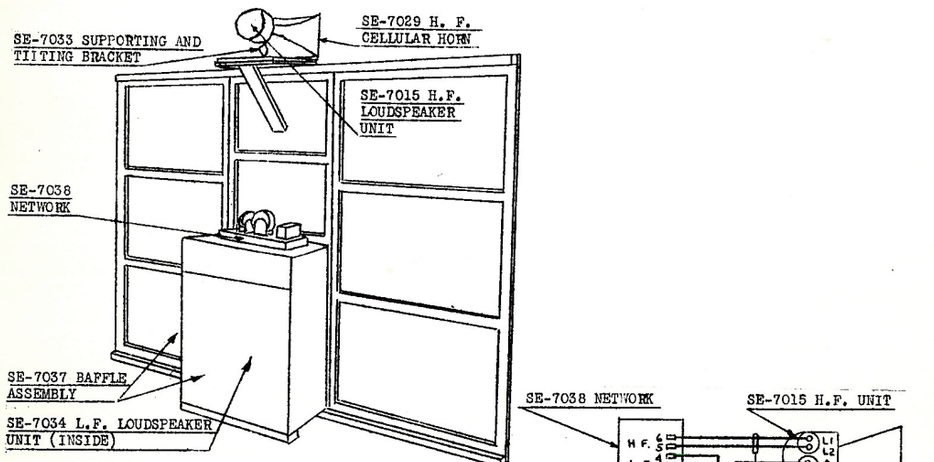

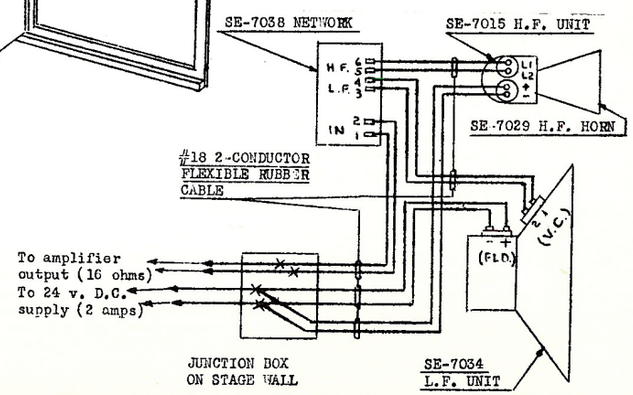

Issued by
Engineering Department
Printed in U. S. A.

3. OPERATION AND ADJUSTMENTS

3.1 The acoustical energy output of the H.F. Channel is made purposely higher than, and adjustable with, respect to that from the L.F. Channel in order to permit good balancing under all screen and auditorium acoustical conditions. It is varied by connecting the two blue strap wires underneath the network chassis to similarly numbered terminals of the two tapped attenuator resistors. The numbers indicate the amount of attenuation in db. For an auditorium of average acoustical properties, and assuming that the sound picture screen is in good condition for the transmission of sound through its perforations, the attenuation will need to be in the order of 3 db.

3.2 For best quality sound, the longitudinal position of the H.F. Speaker Assembly with respect to the L.F. Speaker must be adjusted so that the acoustical energy output of the H.F. and L.F. Channels will be "in phase", that is, will add, and not cancel in the crossover frequency region. This operation should be performed before final amplifier equalization is undertaken since it affects the apparent sound quality. There are numerous phasing methods in use. One which gives consistent results is as follows:- The H.F. Horn Assembly is first properly tilted to give even distribution of sound energy throughout the auditorium as evidenced by listening tests. A reel containing fairly heavy male dialogue is then run. An observer in the auditorium is asked to note when the largest difference in sound quality is noted as the voice coil leads to the H.F. Speaker Unit are reversed for various longitudinal positions of the H.F. Speaker Assembly with respect to the L.F. Baffle. With network and speaker connections made in accordance with the connection diagram, and with average horn tilt, the position noted in section 2.4 is approximately correct, but variations in tilt, speaker units, network characteristics, etc., make it well worth while to actually check for correct phasing. Once the point of maximum difference in sound quality is determined, even an untrained observer will be able to tell which voice coil connection gives best quality.

3.3 Unless the stage volume is very small, or is fairly well filled with drapes, scenery, etc., better auditorium sound quality will usually be secured by an approximate acoustic isolation between stage and auditorium except for the horn mouth and baffle face. The isolating material may consist of heavy drapes, wall board, old scenery, etc., arranged to close off the back of the screen (except for horn mouth and speaker openings), as well as possible, and to extend to the sides of the proscenium arch. If there is considerable stage apron space in front of the screen, it may be necessary to cover it with carpet or other sound absorbing material to reduce sound reflections.

4. MAINTENANCE

4.1 In the event of complete failure of a H.F. Unit, reasonably satisfactory emergency operation can be obtained by connecting the entire amplifier output to the SE-7034 L.F. Loudspeaker Unit, by removing the wires going to the network input terminals (1 and 2), and splicing them to the wires removed from the network L.F. output terminals (3 and 4).

5. REPLACEMENT PARTS

5.1 The cone and voice coil of the SE-7034 L.F. Loudspeaker Unit may be ordered as "SA-2351-4 Cone and Voice Coil for SE-7034 L.F. Loudspeaker Unit". The diaphragm and field coil of the SE-7015 H.F. Loudspeaker Unit cannot be satisfactorily replaced in the field. Replacement units are available on a repair basis.

Issued by
Engineering Department
Printed in U. S. A.

1. COMPONENTS AND CHARACTERISTICS

1.1 SE-7018 Network

Crossover Frequency	400 cycles
Input impedance	16 ohms
H.F. Output impedance	16 ohms
L.F. Output impedance	16 ohms
H.F. Channel Attenuator	7 db "L" pad
Schematic & Wiring Diagram	ASE-7018
Terminals	Screw and solder lugs on terminal strips
Overal dimensions	14-1/2" L. x 10-1/16" W. x 8" H.
Weight	17-1/2 lbs.
Finish	Dull black lacquer

1.2 SE-7019-A Folded L.F. Horn

Material	Wood and plywood
Overall dimensions	85-5/8" H. (or W.) x 32" D. x 41-5/8" W. (or H.)
Weight	260 lbs.
Speaker Units required	(2) 15" (SE-7020)
Mounting position	Long dimension vertical or horizontal. (SE-7019 Type can be mounted only with long dimension horizontal)
Finish	Flat black casein paint

1.3 SE-7020 L.F. Loudspeaker Unit

Type	15" Electro-dynamic cone
Field Winding, rating	24 volts, 17 watts
Voice Coil impedance	32 ohms at 400 cycles
Terminals	Screw and solder lugs
Overall dimensions	15-1/8" dia. x 8-17/32" D. Mounting bolt circle, 7-9/32". 8 holes 17/64" dia.
Weight	16 lbs.
Finish	Dull black lacquer

1.4 SE-7015 H.F. Loudspeaker Unit

Type	Metal diaphragm, electro-dynamic
Field Winding, rating	24 volts, 20 watts
Voice Coil impedance	16 ohms at 600 cycles
Terminals	Screw and solder lugs
Overall dimensions	7" dia. x 9-3/8" D. (over horn mounting studs)
Weight	21 lbs., 11 oz.
Finish	Dull black lacquer

1.5 SE-7017 Horn Throat

Material	Die-cast zinc alloy
Dimensions	14-5/8" L. x 4-1/2" dia. at small end x 5-5/16" sq. at large end.
Weight	9 lbs.
Function	Couples one SE-7015 H.F. Loudspeaker Unit to SE-7016 Horn
Finish	Dull black lacquer

1.6 SE-7016 H.F. Cellular Horn (32 cell)

Material	Die-cast zinc alloy exponential cells bolted together and into a cast throat
Dimensions	30-1/2" W. x 16" H. x 22-3/4" L.
Weight	72 lbs.
Distribution	Covers solid angle 45° (vert.) x 90° (horiz.)
Frequency Range	Suitable for 400 cycle crossover systems
Finish	Dull black lacquer

1.7 SE-7057 Sled for H.F. Horn Assembly

Material	Angle iron, miscellaneous hardware
Function	Supports SE-7016 Horn, SE-7017 Horn Throat, and SE-7015 Loud-Speaker Unit. Provides turn-buckle tilt adjustment.
Weight	9 lb.
Finish	Dull black lacquer

Issued by
Engineering Department
Printed in U. S. A.

1.8 General - The overall dimensions of the assembled SE-7511 Loudspeaker System with SE-7019-A Folded L.F. Horn longest dimension vertical are 8' 10" H. x 3' 5-5/8" W. x 45-1/2" D. With the longest dimension horizontal the dimensions are 60" H. x 85-5/8" W. x 45-1/2" D. The total weight is approx. 425 lbs. Sufficient working space (preferably at least 18") should be available at the back of the SE-7019-A Folded L.F. Horn, to permit access to its speaker unit and network compartment. The loudspeaker system will safely and with low distortion handle 20 watts. An external source of DC., of approx. 2.4 amperes at 24 volts is required for field supply.

2. INSTALLATION

2.1 The SE-7019-A Folded L.F. Horn, is designed to allow for mounting with the longer dimension either horizontal or vertical. The efficiency (ratio of total acoustical output energy to electrical input energy) is slightly greater with the longer dimension horizontal and with the horn resting solidly on the stage floor. The angular distribution of energy is wider and more even, however, about the long axis of the horn, and this consideration therefore, in an auditorium of the usual proportions, would call for having the longer dimension vertical. For high houses with one or more balconies, better results will usually be secured by having the longer dimension horizontal. Experience indicates that in such cases, best H.F. Horn coverage is secured by having the H.F. Speaker System fairly well down on the screen, in fact, resting on the L.F. Horn. In this position it is close enough to main floor front seats to provide plenty of direct sound energy even though the H.F. Horn Assembly is tilted upward a considerable amount to give direct sound energy to upper balcony seats.

2.2 Remove the wing nuts and washers securing the rear cover of the L.F. Horn Speaker Compartment and take off the cover. Mount the two L.F. Speaker Units, taking care that cones are not damaged by accidental contact with mounting bolts; this operation is most easily and safely performed with the L.F. Horn resting face downward on the floor, provided space permits. Mount the network to the support blocks in the speaker compartment with the wood screws and washers provided. Assemble the H.F. Horn, Throat, and Unit, and rig the assembly on the support sled. The sled members go together with the tapping projections upward so the bottom surface of the sled will be smooth and hence free to slide on the L.F. Horn surface supporting it for phasing operations. The sketch shows the assembled relationship of the various components for the vertical L.F. Horn position

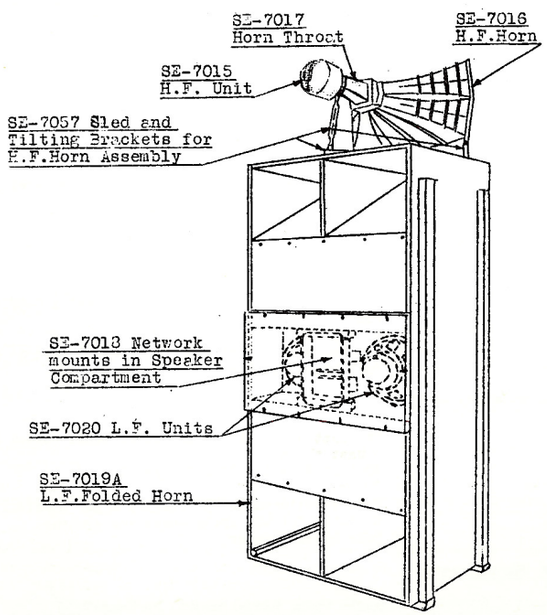

2.3 Make connections to the network and the loudspeaker units in accordance with the following sketch, or, where the loudspeaker system is part of a standard sound system, in accordance with the sound system conduit and connection diagrams. If there is doubt as to final L.F. Horn position, leave sufficient slack in connection cords to allow it to be turned about.

Issued by
Engineering Department
Printed in U. S. A.

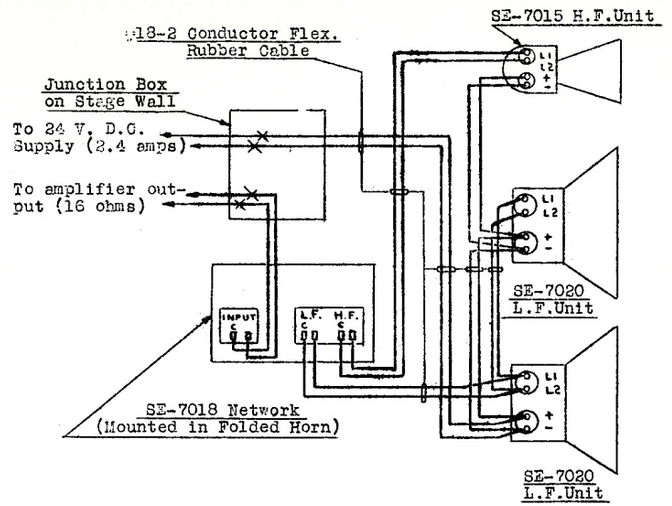

3. OPERATION AND ADJUSTMENTS

3.1 The acoustical energy output of the H.F. Channel is purposely made higher than and adjustable with respect to that from the L.F. Channel in order to permit good balancing under all screen and auditorium acoustical conditions. It is varied by connecting the two blue strap wires inside the network chassis to similarly numbered terminals of the two tapped attenuator resistors. The numbers indicate the amount of attenuation in db. For an auditorium of average acoustical properties, and assuming that the sound picture screen is in good condition for the transmission of sound through its perforations, the attenuation will need to be in the order of 2 db.

3.2 For best quality sound, the longitudinal position of the H.F. Speaker Assembly with respect to the L.F. Speaker must be adjusted so that the acoustical energy output of the H.F. and L.F. Channels will be "in phase", that is, will add, and not cancel in the crossover frequency region. This operation should be performed before final amplifier equalization is undertaken since it affects the apparent sound quality. There are numerous phasing methods in use. One which gives consistent results is as follows. The H.F. Horn Assembly is first properly tilted to give even distribution of sound energy throughout the auditorium as evidenced by listening tests. A reel containing fairly heavy male dialogue is then run. An observer in the auditorium is asked to note when the largest difference in sound quality is noted as the voice coil leads to the H.F. Speaker Unit are reversed for various longitudinal positions of the H.F. Speaker Assembly with respect to the L.F. Horn. Once the point of maximum difference in sound quality is determined, even an untrained observer will be able to tell which voice coil connection gives best quality. Phasing will be found less critical when the L.F. Horn is vertical due to its resulting smoother response in the crossover frequency region. If the phasing point comes where the face of the H.F. Horn Assembly is more than a few inches from the screen another equally good point can be found by changing the relative horn position approx. 16", to bring the H.F. Horn mouth ahead of the face of the L.F. Horn; at the same time reversing the H.F. Unit voice coil leads. The L.F. Horn face need not be close to the screen surface, but as has been previously pointed out, the H.F. Horn mouth should be, for reduction of sound reflections from the rear screen surface.

3.3 Unless the stage volume is very small, or is fairly well filled with drapes, scenery, etc., better auditorium sound quality will usually be secured by an approximate acoustic isolation between stage and auditorium except for the horn mouths. The isolating material may consist of heavy drapes, wall board, old scenery, etc., arranged to close off the back of the screen (except for horn mouths) as well as possible, and to extend to the sides of the proscenium arch. If there is considerable stage apron space in front of the screen, it may be necessary to cover it with carpet or other sound absorbing material to reduce sound reflections.

4. MAINTENANCE

4.1 In the event of complete failure of a H.F. Unit, emergency operation can be obtained by connecting

the entire amplifier output to the two L.F. Speaker Units, by removing the wires going to the network input terminals and splicing them to the wires removed from the network L.F. output terminals.

5. REPLACEMENT PARTS

5.1 The cone and voice coil of the SE-7020 L.F. Loudspeaker Unit, may be ordered as "SA-1999-4 Cone and Voice Coil for SE-7020 L.F. Loudspeaker Unit." The diaphragm and field coil of the SE-7015 H.F. Loudspeaker Unit cannot be satisfactorily replaced in the field. Replacement units are available on a repair basis.

Issued by
Engineering Department
Printed in U. S. A.

1. COMPONENTS AND CHARACTERISTICS

1.1 SE-7018 Network

Crossover Frequency	400 cycles
Input Impedance	16 ohms
H. F. Output Impedance	16 ohms
L. F. Output Impedance	16 ohms
H. F. Channel Attenuator	7 db "L" pad
Schematic & Wiring Diagram	ASE-7018
Terminals	Screw and solder lugs on terminal strips
Overall Dimensions	14⅛" L.X 10-1/16" W. X 8" H.
Weight	17½ lbs.
Finish	Dull black lacquer

1.2 SE-7019-A Folded L. F. Horn

Material	Wood and plywood
Overall Dimensions	85-5/8" H. (or W.) X 32" D. X 41-5/8" W. (or H.)
Weight	260 lbs.
Speaker Units required	(2) 15" (SE-7020)
Mounting Position	Long dimension vertical or horizontal (SE-7019 type can be mounted only with long dimension horizontal.)
Finish	Flat black casein paint

1.3 SE-7020 L. F. Loudspeaker Unit

Type	15" Electro-dynamic cone
Field winding rating	24 V., 17 watts
Voice coil impedance	32 ohms at 400 cycles
Terminals	Screw and solder lugs
Overall Dimensions	15-1/8" dia. X 8-17/32" deep. Mounting bolt circle, 7-9/32"; 8 holes 17/64" dia.
Weight	16 lbs.
Finish	Dull black lacquer

1.4 SE-7015 H. F. Loudspeaker Unit

Type	Metal diaphragm, electro-dynamic
Field Winding rating	24 V., 20 watts
Voice Coil Impedance	16 ohms at 600 cycles
Terminals	Screw and solder lugs
Overall Dimensions	7" dia. X 9-3/8" deep (over horn mounting studs)
Weight	21 lbs. 11 oz.
Finish	Dull black lacquer

1.5 SE-7039 H. F. Horn Double Throat

Material	Die-cast zinc alloy
Dimensions (overall)	11⅝" L. X 9¼" W.-Horn end 5-5/16" square-L. S. unit coupling faces 4⅛" dia.
Weight	5 lbs.
Function	Couples two SE-7015 H. F. Loudspeaker Units to SE-7016 H. F. Cellular Horn
Finish	Dull black lacquer

1.6 SE-7016 H. F. Cellular Horn (32 cell)

Material	Die cast zinc alloy exponential cells bolted together and into cast throat
Dimensions	30⅛" W. X 16" H. X 22-3/4" L.
Weight	72 lbs.
Distribution	Covers solid angle 45° (vert.) x 90° (horiz.)
Frequency Range	Suitable for 400 cycle crossover systems
Finish	Dull black lacquer

1.7 SE-7057 Sled for H. F. Horn Assembly

Material	Angle iron, miscellaneous hardware
Function	Supports SE-7016 Horn, SE-7039 Horn Throat, and SE-7015 Loudspeaker Units. Provides turn buckle tilt adjustment
Weight	9 lbs.
Finish	Dull black lacquer

Issued by
Engineering Department
Printed in U. S. A.

1.8 SE-7040 Impedance Matching Transformer

Type	Iron core, audio-frequency (300-8000 cycles) transformer in sheet metal case. Screw terminals with cover.
Dimensions	4-5/8 X 4-3/4 X 5-3/8" H.
Weight	6½ lbs.
Function	Matches two SE-7015 H. F. Loudspeaker Unit voice coils in parallel (8 ohms) to 16 ohms H. F. channel output of SE-7018 Network - 16 ohm terminals are numbers 3 and 5; 8 ohm terminals are numbers 3 and 4
Finish	Dull black lacquer

1.9 General - The overall dimensions of the assembled SE-7511 Loudspeaker system with SE-7019-A Folded L. F. horn longest dimension vertical are 8'-10" X 3'-5 5/8 W. X 40 3/4 D. With the longest dimension horizontal the dimensions are 60" H. X 85 5/8" W. X 40 3/4" D. The total weight is approximately 450 lbs. Sufficient working space (preferably at least 18") should be available at the back of the SE-7019-A Folded L. F. Horn to permit access to its speaker unit and network compartment. The loudspeaker system will safely and with low distortion handle up to 40 watts of amplifier output power. The input impedance is 16 ohms An external source of D. C., Approximately 3.0 amperes at 24 volts is required for field supply.

2. INSTALLATION

2.1 The SE-7019-A Folded L. F. Horn is designed to allow for mounting with the longer dimension either horizontal or vertical. The angular distribution of energy is wider and more even, however, about the long axis of the horn, and this consideration therefore, in an auditorium of the usual proportions, would call for having the longer dimension vertical. For high houses with one or more balconies, better results will usually be secured by having the longer dimension horizontal. Experience indicates that in such cases, best H. F. horn coverage is secured by having the H. F. speaker system fairly well down on the screen, in fact, resting on the L. F. horn. In this position it is close enough to main floor front seats to provide plenty of direct sound energy even though the H. F. horn assembly is tilted upward a considerable amount to give direct sound energy to upper balcony seats.

2.2 Remove the wing nuts and washers securing the rear cover of the L. F. horn speaker compartment and take off the cover. Mount the two L. F. speaker units taking care that cones are not damaged by accidental contact with mounting bolts; this operation is most easily and safely performed with the L. F. horn resting face downward on the floor, provided space permits. Mount the network to the support blocks in the speaker compartment with the wood screws and washers provided. The SE-7040 Impedance Matching Transformer may also be mounted in the speaker compartment if desired, or it may be located elsewhere on the SE-7019-A Folded L. F. Horn at any convenient point in the cable connections to the H. F. Loudspeaker Units. Assemble the H. F. horn, throat and units, and rig the assembly on the support sled. The sled members go together with the tapping projections upward so the bottom surface of the sled will be smooth and hence free to slide on the L. F. horn surface supporting it for phasing operations . The sketch shows the assembled relationship of the various components for the vertical L. F. horn position.

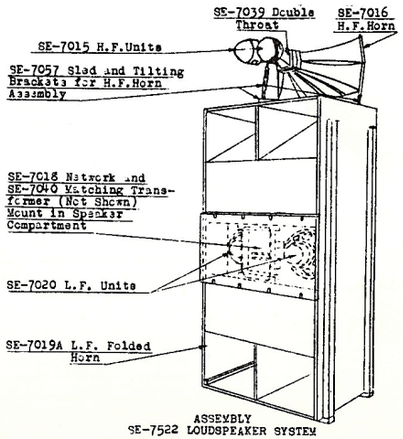

ASSEMBLY
SE-7522 LOUDSPEAKER SYSTEM

2.3 Make connections to the network, matching transformer, and the loudspeaker units in accordance with the following sketch, or, where the loudspeaker system is part of a standard sound system, in accordance with the sound system conduit and connection diagrams. If there is doubt as to final L. F. horn position (vertical or horizontal), leave sufficient slack in connection cables so that the position may be changed if desired.

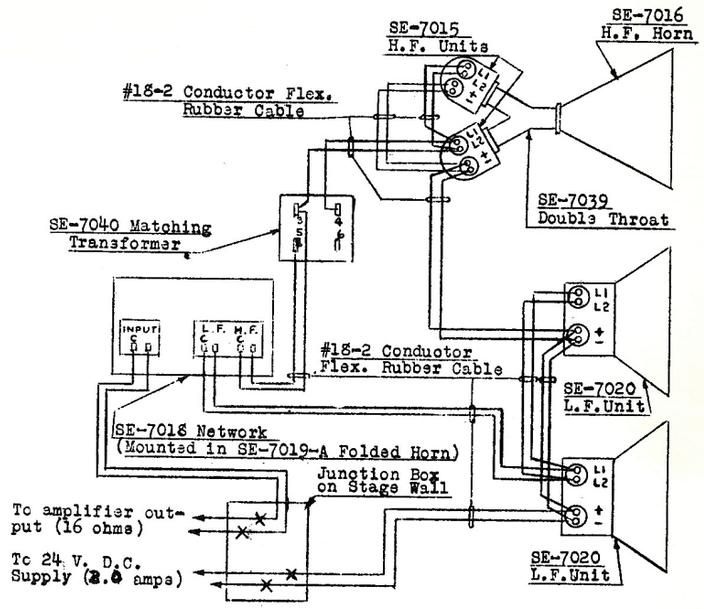

SE-7522 LOUDSPEAKER SYSTEM

3. OPERATION AND ADJUSTMENTS

3.1 The acoustical energy output of the H. F. channel is purposely made higher than and adjustable with respect to that from the L. F. channel in order to permit good balancing under all screen and auditorium acoustical conditions. It is varied by connecting the two blue strap wires inside the network chassis to similarly numbered terminals of the two tapped attenuator resistors. The numbers indicate the amount of attenuation in db. For an auditorium of average acoustical properties, and assuming that the sound picture screen is in good condition for the transmission of sound through its perforations, the attenuation will need to be in the order of 2 db.

3.2 For best quality sound, the longitudinal position of the H. F. speaker assembly with respect to the L. F. speaker must be adjusted so that the acoustical energy output of the H. F. and L. F. channels will be "in phase", that is, will add, and not cancel in the cross-over frequency region. This operation should be performed before final amplifier equalization is undertaken since it affects the apparent sound quality. There are numerous phasing methods in use. One which gives consistent results is as follows. The H. F. horn assembly is first properly tilted to give even distribution of sound energy throughout the auditorium as evidenced by listening tests. A reel containing fairly heavy male dialogue is then run. An observer in the auditorium is asked to note when the largest difference in sound quality is noted as the voice coil leads to the H. F. speaker unit are reversed for various longitudinal positions of the H. F. speaker assembly with respect to the L. F. baffle. Once the point of maximum difference in sound quality is determined, even an untrained observer will be able to tell which voice coil connection gives best quality. Phasing will be found less critical when the L. F. horn is vertical due to its resulting smoother response in the crossover frequency region. If the phasing point comes where the face of the H. F. horn assembly is more than a few inches from the screen, another equally good point can be found by changing the relative horn positions

approximately 16 inches (½ wavelength of sound at 400 cycles) to bring the H. F. horn mouth ahead of the face of the L. F. horn, at the same time reversing both H. F. unit voice coil leads. The L. F. horn face need not be close to the screen surface, but the H. F. horn mouth should be for reduction of sound reflections from the rear screen surface.

3.3 Unless the stage volume is very small, or is fairly well filled with drapes, scenery, etc., better auditorium sound quality will usually be secured by an approximate acoustic isolation between stage and auditorium except for the horn mouths. The isolating material may consist of heavy drapes, wall board, old scenery, etc. arranged to close off the back of the screen (except for horn mouths) as well as possible, and to extend to the sides of the proscenium arch. If there is considerable stage apron space in front of the screen, it may be necessary to cover it with carpet or other sound absorbing material to reduce sound reflections.

4. MAINTENANCE

4.1 In the event of complete failure of a H. F. unit, reasonably satisfactory emergency operation can be obtained by connecting the entire amplifier output to the SE-7034 L. F. Loudspeaker Unit by removing the wires going to the network input terminals (1 and 2) and splicing them to the wires removed from the network L. F. output terminals (3 and 4).

5. REPLACEMENT PARTS

5.1 The cone and voice coil of the SE-7020 L.F. Loudspeaker Unit may be ordered as "SA-1999-4 Cone & Voice Coil for SE-7020 L. F. Loudspeaker Unit". Replacement SE-7015 H. F. Loudspeaker Units are available on a repair basis. Diaphragms and field coils are <u>not</u> field replaceable.

Issued by
Engineering Department
Printed in U. S. A.

FRAMEWORK

LARGE WING

SMALL WING

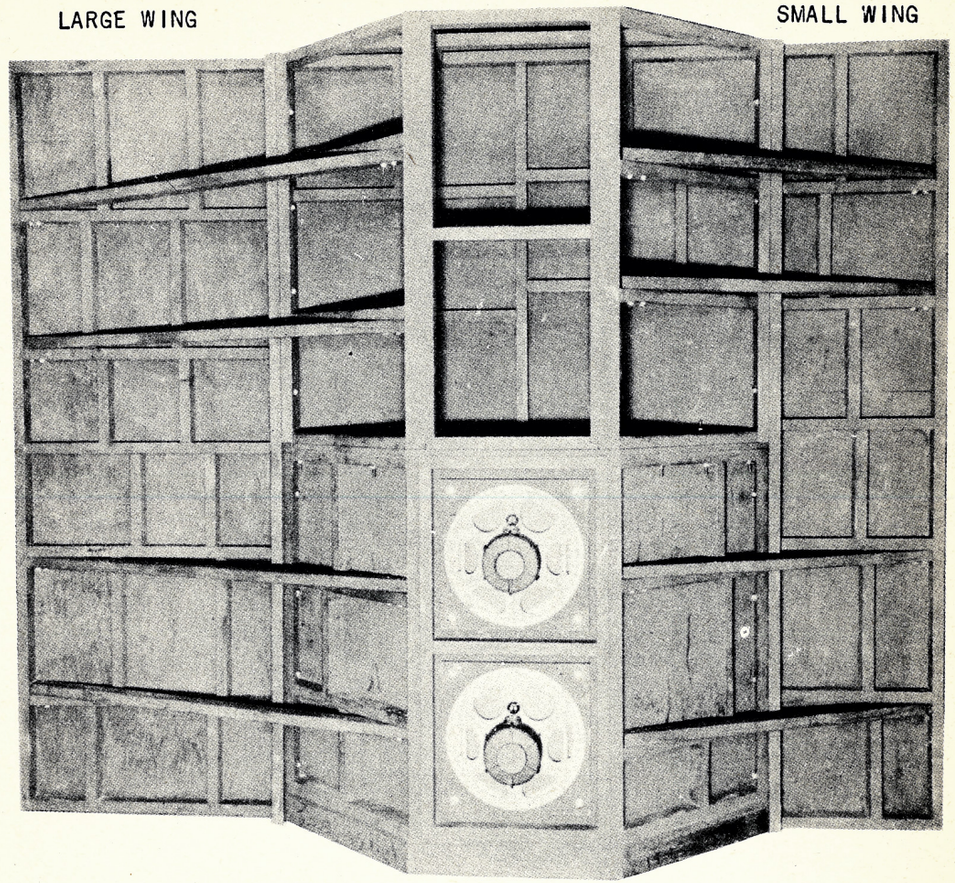

SPEAKER SECTION

TA-7396 BAFFLE ---- ASSEMBLY

NOTE: TA-7397 BAFFLE IS SAME AS ABOVE EXCEPT FOR SUBSTITUTION OF ANOTHER SPEAKER SECTION FOR THE FRAMEWORK SHOWN. TA-7397 BAFFLE ACCOMODATES FOUR 18" L.F. SPEAKER UNITS.

MOTIOGRAPH, INC.
CHICAGO, ILL.

WE-7552-1
8-30-41

PRINTED IN U.S.A.

1. ABSTRACT - Due to fluctuating supply conditions various different makes of motors have been furnished with Motiograph equipment. Complete information on replacement parts is not available. Refer to the following list for a brief description of the various motors that have been used. All of them are interchangeable mechanically.

1.1 The SH-7068 is the AC motor currently being supplied.

2. DESCRIPTION

SH-2673 Leland 1/6 HP Orig. motor used on SH-7500 reproducer has following parts:
SH-2759 Terminal Block
SH-2768 Thermal overload device
SH-2770 Starting switch tension spring
SH-2771 Starting switch centrifugal mechanism
SH-2775 Bearing

SH-2785 Leland 1/3 HP Capacitor start, type KL frame KL frame 27 form BOWTH Spec 11304 uses SE-2798 starting condenser, SH-2811 Thermal unit, SH-2816 starting switch assembly.

SH-2786 Same as SH-2785 except with weaker springs for 50 cycle operation.

SH-2787 Wagner 1/6 HP frame 571, type RB or RBR, 1725 RPM, split phase

SH-7043 GE 1/12 HP Model 5KH 35 AB 205A type KH, 1725 RPM uses:
SH-2788 Bearing
SH-2789 Resilient mounting ring
SH-2799 Starting switch

SH-7050 Kingston & Conley 1/4 HP Type SB uses:
SE-2793 bearing and SE-2794 bearing

SH-7051 GE 1/4 HP 1725 RPM Model 5KH 45 AB2200

SH-7052 Delco 1/4 HP "Thermometer" Type M Model A-6251

SH-7053 GE Model KH 1/4 HP

SH-7054 1/8 HP GE 1770 RPM Direct current operation

SH-7062 1/4 HP Emerson type S60 BEA style 1765-16422 1725 RPM uses:

SH-2814 resilient mounting ring and SH-2815 starting switch

SH-7065 Leland 1/6 HP type KS, frame 2 B567 1725 RPM uses:
SH-2809 switch tension spring and following Leland parts:
A5757 bearings, SB3293 cutout switch, SB3999B12 rotor, SB3990 and 995 starter, SA6245 rot. switch, A5942-2 act. sleeve and A5994 spring.

SH-7066 Same as 7065 except for 50 cycle operation

SH-7068 Motor GE 1/4 HP Model 5KH 42AB 1252

SH-7070 Marathon 1/6 HP Model 55 M290CW uses:
SH-7075 internal starting switch, SH-7076 throw out assembly and following Marathon parts:
#1018Z bearings, E3925-A rubber mounting rings,
#A-511634-8 rotor assembly

SH-7070C Same as SH-7070 but modified for condenser starting uses:
SH-2828 starting condenser
SH-2829 condenser mounting unit

SH-7071 Same as SH-7070 except has SH-2813 springs for 50 cycles

SH-7072 Same as SH-7067 plus rheostat for torque control

SH-7073 Same as SH-7068 plus rheostat for torque control

SH-7080 Marathon 1/4 HP 1725 RPM

SH-7081 Same as SH-7080 except has SH-2830 springs for 50 cycle operation

1. DESCRIPTION

1.1 The SH-2673 Motor for the SH-7500 Reproducer is a Leland Type KS, Frame 25, Form AOWTH, 1/6 H.P.,115 volt, 60 cycle, single phase motor. It has a 1-1/8" shaft extension to fit the SH-7500 Reproducer and is arranged for left-hand side wall mounting. A low-torque starting winding and a thermal overload protection device are incorporated in the design.

2. REPLACEMENT PARTS - (In ordering parts always give the Reference Number stamped on the motor nameplate.)

PART	PART NUMBER
Armature Assembly, complete	25-CN-KAR-63
Stator Assembly, complete	25F1
Switch End Frame	2C-386-C31
Pulley Shaft End Frame	26-395-3A
End Frame Screws	19-6
Switch End Frame Bearing only	A-128 - SH-2775
Pulley Shaft End Frame Bearing only	A-128 - SH-2775
Centrifugal Starting Switch Mechanism	B-285 - SH-2771
Centrifugal Starting Switch Tension Springs only	A-165 - SH-2770
Terminal Block (includes switch contacts)	B-466 - SH-2759
Thermal Overload Protection Device only	E-436 - SH-2768
Shaft End Play Washers	2415
Rubber Cushion Ring	28532-1 - PS-1606
Oil Cup	1168 - SH-2772 Straight SH-2773 Angle
Pressed Steel Base	SC-1043-3
Conduit Box Assembly	B-303
Cradle Latches	#28457 - SH-2774

Issued by
Engineering Department
Printed in U. S. A.

0. ABSTRACT

0.1 To overcome trouble experienced with SH-7070 (Marathon) Motors due to slow starting or failure to start, Motiograph is supplying a kit which adds a starting condenser to the circuit and increases torque.

0.2 This bulletin provides instructions for modifying SH-7070 Motor (Marathon) for improved starting characteristics.

1. PROCEDURE

1.1 Electrically this modification consists of connecting an electrolytic condenser in series with the internal starting switch to increase the starting torque. A kit of SH-7074 modification parts is required for each motor and includes the following:

Item No. 2 - 1 SH-2828 motor starting condenser
3 - 1 SH-2829 condenser mounting unit
4 - 1 10/32" x 5/16" RHIM screw nickel plated
5 - 2 12" lengths of motor lead wire
6 - 1 A-424 bushing
1 3" length of cambric tubing
1 Instruction sheet

1.2 Disconnect the 115 volt leads and motor coupling. Take motor from cradle after removing end clamps. After marking end bell and housing for reference in reassembling, remove end bell opposite shaft extension. Remove four screws holding internal switch in place. Drill a hole in the end bell as indicated in the drawing using a 11/32" drill. Ream hole to size for 3/8" bushing which is used to protect wires to the condenser. Unsolder blue lead (only wire on one end of switch) and replace with new 12" lead. Shorten blue lead by two inches and splice to other new 12" lead supplied. After soldering cover splice with cambric tubing and run the new wires through the bushing. Restore starting switch to proper position. Reassemble motor being sure that none of the wires touch the starting switch or rotating parts. Mount the condenser bracket by removing and discarding the top screw used to hold the connection box to the side of the motor using the new screw in the center hole of the bracket. Cut wires to proper length, tin ends and slip grommet over the wires and connect wires to the condenser terminals. Replace end covers on condenser bracket and after replacing clamps, coupling, 115 volt leads, etc., the motor should be ready for operation with increased torque. A reduction in starting time and torque can be obtained by using a smaller condenser. The 85-115 mfd unit was selected as the proper size to start the motor under extreme load and low voltage conditions.

2. MERCHANDISING

2.1 Motiograph advises that these kits are available on a no-charge basis and where needed the exhibitor should be advised to immediately obtain them from his Motiograph Dealer.

2.2 Each SH-7070 Motor to be modified requires:

1 - SH-7074 Modification Kit.

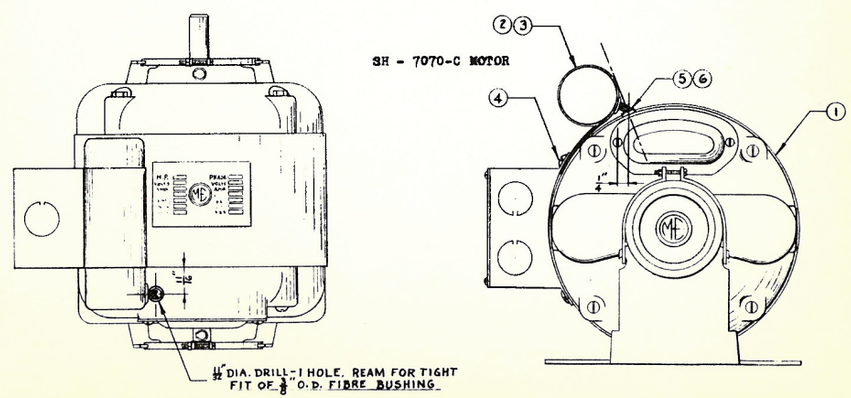

REPAIRS AND REPLACEMENT

Replacement of component parts, except of a minor nature, should not be attempted in the field due to time and expense involved.

A replacement panel is available, on a revolving stock basis, in New York.

Order 1 - SE-7512 Switching Panel, indicating the correct charge classification and return the old panel to New York immediately following its replacement.

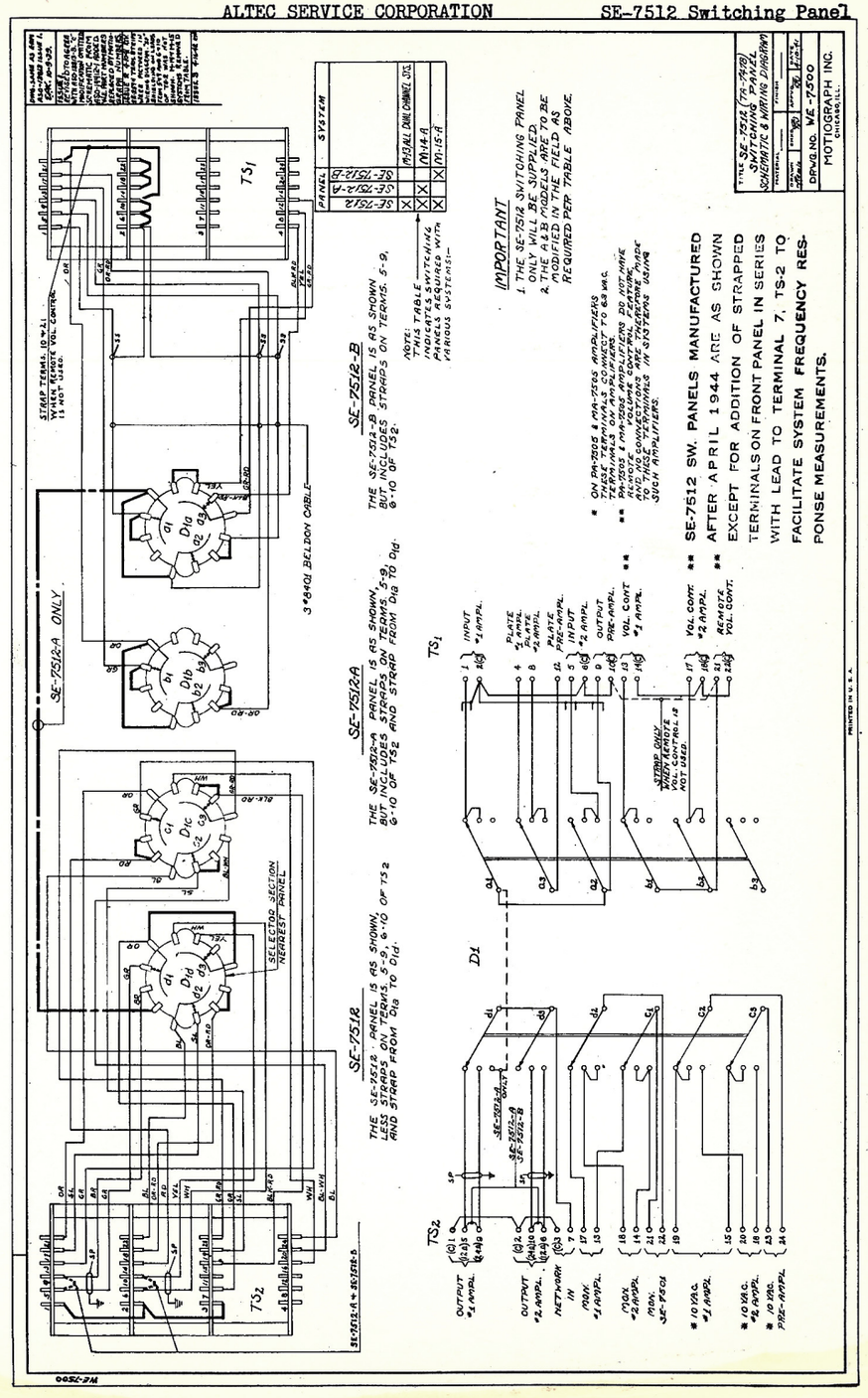
SE-7512 SW. PANELS MANUFACTURED
AFTER APRIL 1944 ARE AS SHOWN
EXCEPT FOR ADDITION OF STRAPPED
TERMINALS ON FRONT PANEL IN SERIES
WITH LEAD TO TERMINAL 7, TS-2 TO
FACILITATE SYSTEM FREQUENCY RES-
PONSE MEASUREMENTS.
IMPORTANT
1. THE SE-7512 SWITCHING PANEL ONLY WILL BE SUPPLIED.
2. THE 4 PANELS ARE TO BE MODIFIED IN THE FIELD AS REQUIRED PER TABLE ABOVE.
SE-7512-B
SE-7512A ONLY
SE-7512A
SE-7512
SELECTED SECTION NEAREST PANEL
TS1
TS2
D1
MOTIOGRAPH INC.
DRWG. NO. WE-7500

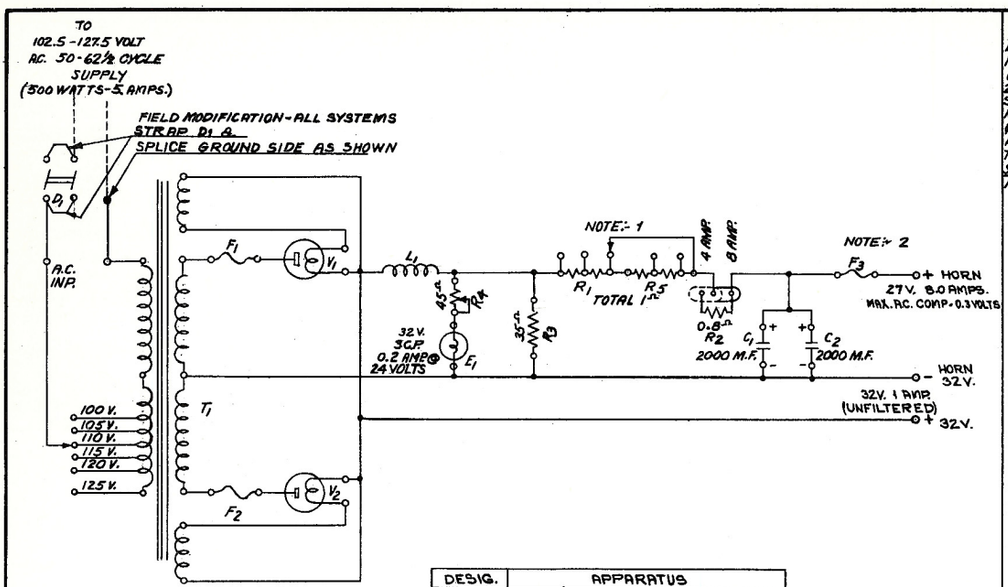

ISSUE:		APP'D
1	2-14-36	M.B.
TO GND SIDE OF LINE AT D_1 WAS NOT SHOWN. 0.2 AMPS. @ 24 V. WAS NOT SPACED AT E_1. NEW NOTE:- 1,2 & 3 ADDED. APPARATUS TABLE WAS NOT SHOWN.		
2	10-11-37	C.F.A. M.B.

NOTES:-

1. R_1, R_2 & R_5 SHOULD BE ADJUSTED SO THAT L.S.T. FIELD CURRENT IS CORRECT.
2. F_3 SHOULD BE AS FOLLOWS:-

OUTPUT - AMPS. D.C.	F_3
3 OR 4	6 AMP.
6 OR 8	10 AMP.

3. DIMENSIONS:- 32" H × 16¼" W × 6" D
   WEIGHT:- 125 LBS.
   MOUNTS ON WALL.

DESIG.	APPARATUS
* C_1 & C_2	TA- 4115 CONDENSER
D_1	H.H. # 8802 (10 V. 250 V. D.P.S.T.) SWITCH
E_1	G 5¾ LAMP 32 V. 3 C.P. CANDELABRA BASE
F_1 & F_2	#91135 D.&W. 15 AMP CARTRIDGE FUSE
* F_3	#91128 " 6. " " " " #91133 " 10. " " "
L_1	#51158-A REACTANCE
R_1 & R_5	RE 0.5 RES. (TAPPED)
R_2	TYPE 'D' RES. 0.8Ω 'Y' TERMS.
R_3	TYPE 'D' RES. 35Ω "Y" TERMS.
R_4	YAXLEY #845 RES. 45Ω
T_1	# 51157 TRANSFORMER
* V_1 & V_2	288-A VACUUM TUBE

* INDICATES NON-COMPONENT ITEM WHICH MUST BE ORDERED SEPERATELY

ASL-2981

A50-6876 WIRING DIAGRAM & CKT. LABEL
ASSOCIATED DRAWINGS

TA-4144-A POWER UNIT

SCHEMATIC

WESTERN ELECTRIC SOUND SYSTEMS

ELECTRICAL RESEARCH PRODUCTS INC. NEW YORK

DRAWN BY C.Y.Y. DATE 2-4-36 APP'D M.B.
CHECKED BY E.H. DATE 2-13-36 APP'D H.L. W.A.B.

SCALE: ~ ASL-2981

PRINTED IN U. S. A.

ALTEC SERVICE CORPORATION

POWER UNIT, TA-4144-A

5310.11

ASO-6876 ISSUE:3

NOTES:
1 - CONNECT FLEXIBLE LEAD ON A.C. INPUT TERMINAL STRIP (TS_1) TO TAP CORRESPONDING TO MEAN AVERAGE VOLTAGE (100 V., 105 V. ETC.)
2 - TA-4115 CONDENSERS (C_1 & C_2 - 2000 M.F.) 288A VACUUM TUBES (V_1 & V_2) AND FUSE (F_3) ARE NOT SUPPLIED AS PART OF THE POWER UNIT.
3 - TO EXPOSE OUTPUT TERMINAL STRIP (TS_4) REMOVE CONDENSERS AND SCREWS FASTENING PARTITION, DRAW PARTITION FORWARD.
4 - DESIGNATIONS C_1, L_1, R_1 ETC. DO NOT APPEAR ON THE APPARATUS.
5 - FOR 4 AMP. OUTPUT INSTALL 6 AMP. FUSE. FOR 8 AMP. OUTPUT INSTALL 10 AMP. FUSE.

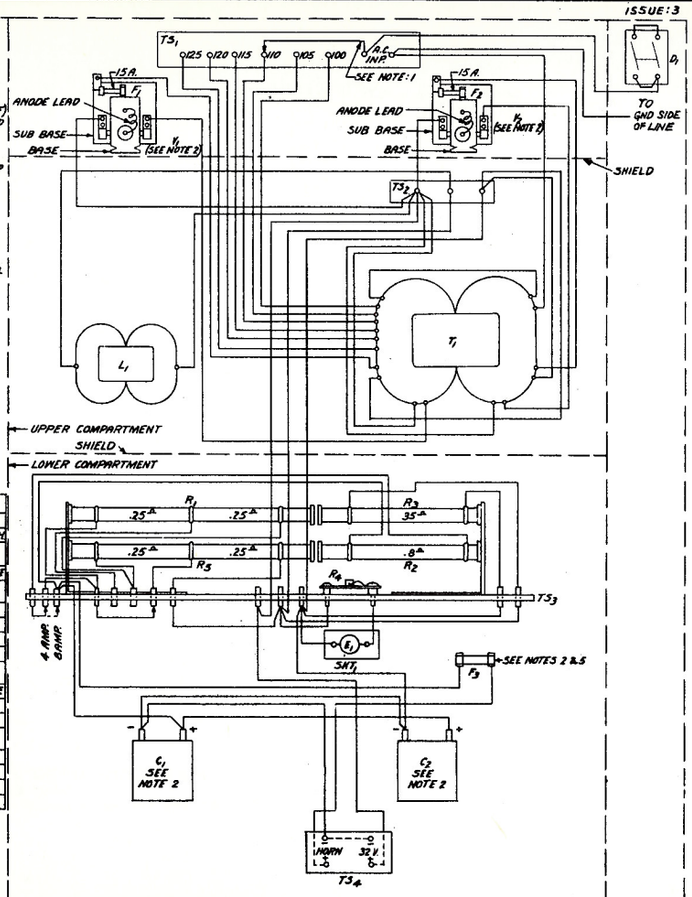

DESIGN.	APPARATUS
C_1, C_2	TA-4115 CONDENSER (SEE NOTE 2)
D_1	H. H. #9802 (10V. ASOV. DP-ST) SWITCH
E_1	G. E. #46 LAMP 32 V. S.C.R. CANDELABRA BASE
F_1 & F_2	#91135 D & M 15 AMP. CARTRIDGE FUSE
F_3 (SEE NOTES 2 & 5)	#91128 " 6 " " " #91133 " 10 " " "
L_1	#5115 B REACTANCE
R_1 & R_5	RE 05 RESISTOR (TAPPED)
R_2	TYPE "D" RESISTOR 0.8Δ "Y" TERMS.
R_3	" " " 35Δ " "
R_4	YAXLEY #845 RESISTOR 4.5 OHMS.
SKT_1	#612 BRYANT CANDELABRA RECEPTACLE
T_1	#5115 T TRANSFORMER
V_1 & V_2	288A VACUUM TUBE (SEE NOTE 2)
BASE	U-46 MOGUL SOCKET BASE (INCLUDES ANODE LEAD.)
SUB-BASE	C-7 MOGUL SOCKET SUB BASE
ANODE LEAD	H-96 FRANKSTOCK ANODE LEAD
BULLSEYE	#136 BULLSEYE JEWEL, GREEN

ISSUE:		APP'D
1	2-14-36 D. TYPE #0602 SWITCH, R4 TYPE #845 RESISTOR (ADJUSTABLE CENTER TAP) TERMINAL PLATE	M.B.
2	3-15-37 D1 TYPE H.H. #9802 TO GND SIDE OF LINE NOT SHOWN. 288A VACUUM TUBES WERE #1890AB TUNGAR BULBS	E.H. M.B.
ISSUE:3	10-11-37	M.B.

ASL-2981 SCHEMATIC

ASSOCIATED DRAWINGS

TA-4144-A POWER UNIT

WIRING DIAGRAM & CIRCUIT LABEL

WESTERN ELECTRIC SOUND SYSTEMS

ELECTRICAL RESEARCH PRODUCTS INC. NEW YORK

DRAWN BY H.W.H. DATE 2-3-36 APP'D

CHECKED BY E.H. DATE 2-13-36

SCALE ASO-6876

TA-4144-A POWER UNIT

PRINTED IN U. S. A.

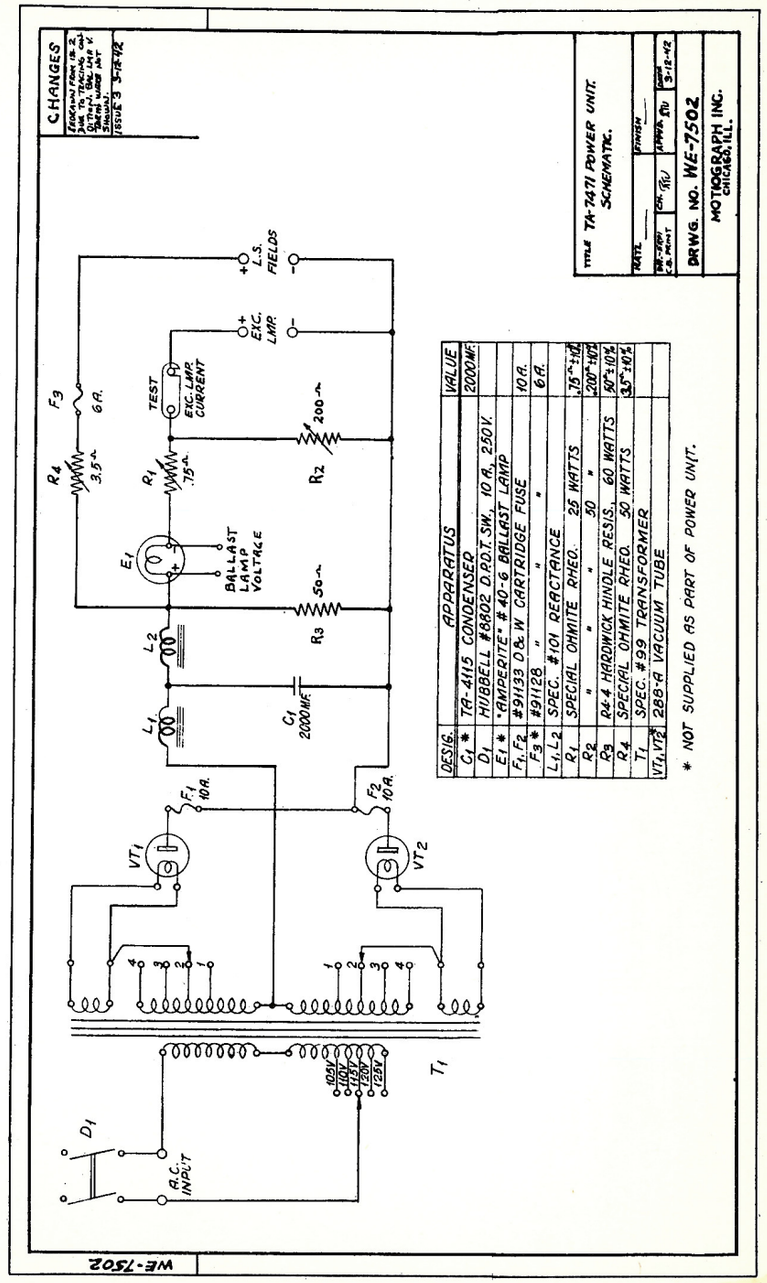

DESIG.	APPARATUS	VALUE
C1 *	TA-4115 CONDENSER	2000MF.
D1	HUBBELL #8802 D.P.D.T. SW. 10 A. 250 V.	
E1 *	"AMPERITE" #40-6 BALLAST LAMP	
F1, F2	#91133 D & W CARTRIDGE FUSE	10 A.
F3 *	#91128 " "	6 A.
L1, L2	SPEC. #101 REACTANCE	
R1	SPECIAL OHMITE RHEO. 25 WATTS	.75Ω ±10%
R2	" " 50 "	200Ω ±10%
R3	#44 HARDWICK HINDLE RESIS. 60 WATTS	50Ω ±10%
R4	SPECIAL OHMITE RHEO. 50 WATTS	3.5Ω ±10%
T1	SPEC. #99 TRANSFORMER	
VT1, VT2 *	286-A VACUUM TUBE	

TA-7471 Power Unit ALTEC SERVICE CORPORATION

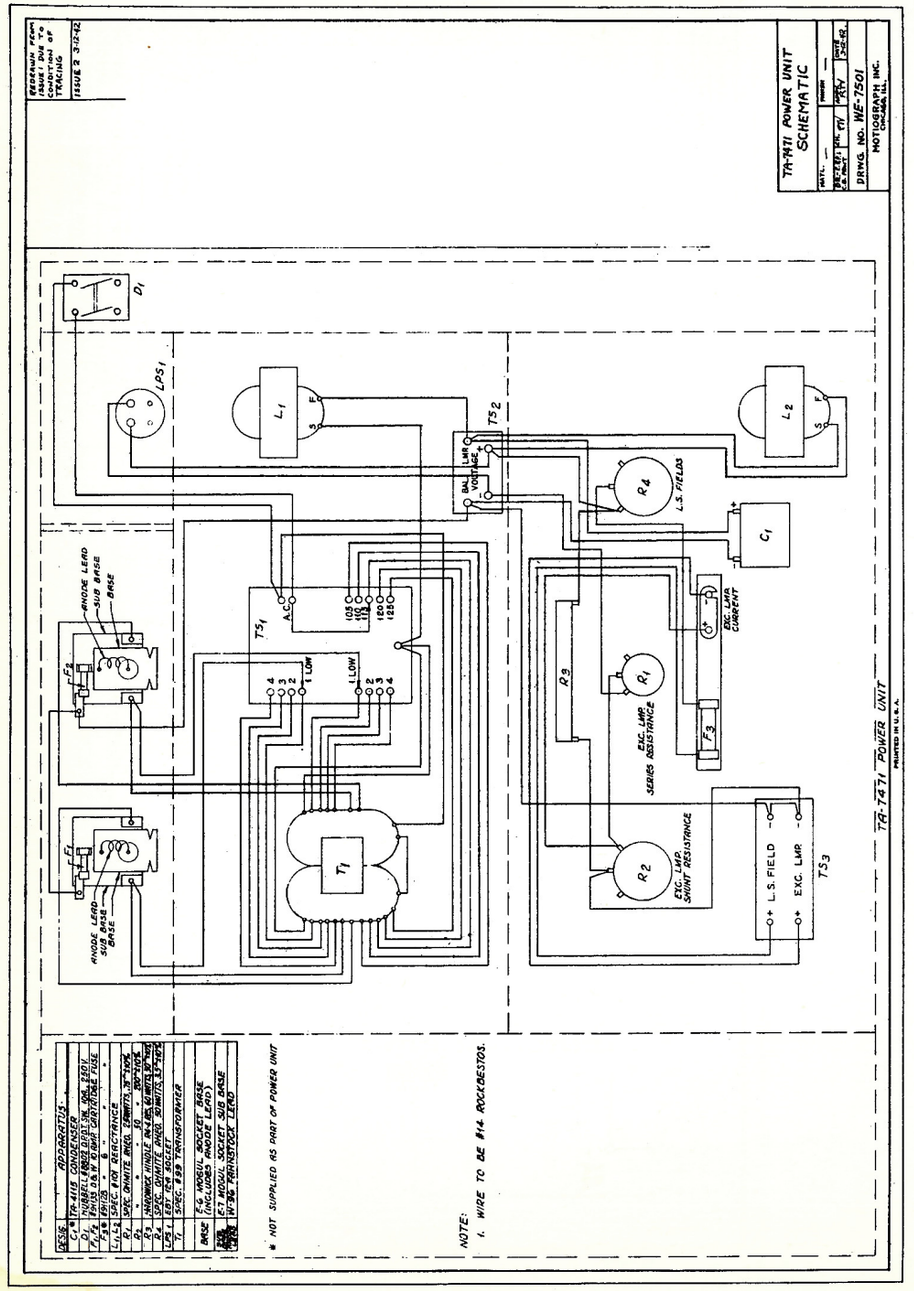

Printed in U.S.A.

Item No.	No. Req.	Part No.	Name	Mat.	Fin.
1	1	SPU-7000	Power Unit Cabinet Assembly		Per Spec
2	1	RPU-7001	Terminal Board Assembly		
3	3		#10-32 x [illegible] F H M Screw	Stl.	Cad P
4	2	APU-2500	Fahnestock Clip	Bronze	None
5	2	APU-2501	Rectifier Tube		
6	2	APU-2502	Rectifier Tube Socket		
7	10		#10-32 x [illegible] Fil H M Screw	Brass	N P
8	1	APU-2503	Double Cutout Base		
9	1	APU-2504	[illegible] Ohm Resistor		
10	1	APU-2505	35 Ohm Resistor		
11	4	APU-2506	Resistor Holding Clip		
12	4		#10-32 x [illegible] R H M Screw	Stl.	Cad P
13	1	APU-2507	Ballast Tube		
14	1	APU-2508	Ballast Tube Socket		
15	1	APU-2509	Power Transformer		
16	1	APU-2510	Large Choke		
17	8		1/4-20 x 1/2 R H M Screw	Stl.	Cad P
18	8		Shakeproof Lockwasher For 1/4 Sc.	Stl.	Cad P
19	8		1/4 Washer (1/2 O.D.)	Stl.	Cad P
20	8		1/4-20 Hex Nut	Stl.	Cad P
21	1	APU-2511	Small Choke		
22	4		#10-32 x 1/2 R H M Screw	Stl.	Cad P
23	8		#10 Washer ([illegible] O.D.)	Stl.	Cad P
24	21		#10-32 x [illegible] Wide Hex Nut	Stl.	Cad P
25	25		#10 Shakeproof Lockwasher	Stl.	Cad P
26	1	APU-2512	Single Cutout Base		
27	2		15 Amp. Plug Fuses		
28	1		10 Amp Plug Fuse		
29	3	APU-2513	Aerovox Condenser		
30	1		#10-32 x [illegible] R H M Screw	Brass	N P
31	1		#10-32 x 1" R H M Screw	Brass	N P
32	6		#10 Washer ([illegible] O.D.)	Brass	N P
33	3		#10-32 x [illegible] Wide Hex Nut	Brass	N P
34	1	APU-2514	Rectifier Series Filament Strip	Bronze	None
* 35	1		1/2 Chase Nipple	Stl.	Cad P
* 36	2		1/2 Conduit Locknuts	Stl.	Cad P
* 37	1	APU-2516	Cover For Handy Box	Stl.	Per Spec
* 38	1	APU-2515	Handy Box	Stl.	Per Spec
* 39	1	APU-2517	Toggle Switch		
*# 40	1	APU-2518	Mounting Angle (R.H.)		Per Spec
*# 41	1	APU-2519	Mounting Angle (L.H.)		Per Spec
42	1	APU-2520	Wiring Material		
43	1		Planagraph Print 7 1/2 x 10 Of RPU-2547		
44	1		Planagraph Print 7 1/2 x 10 Of RPU-2548		
45	1		Packing Crate		
46	1		Packing Carton For Items 3 To 33 Inc.		
47	1		Packing Carton For Items 5, 13 & 29		
48	4	APU-2526	Drive Screw		N.P.
49	1	APU-2523	Name Plate		

Associated Drawings
APS-1000 Finish Specifications
RPU-2547 Schematic Diagram
RPU-2548 Wiring Diagram
APU-2549 Testing Specifications

Title: PU-7500 Power Unit Assembly
Drwg. No. RPU-7500
Motiograph Inc.

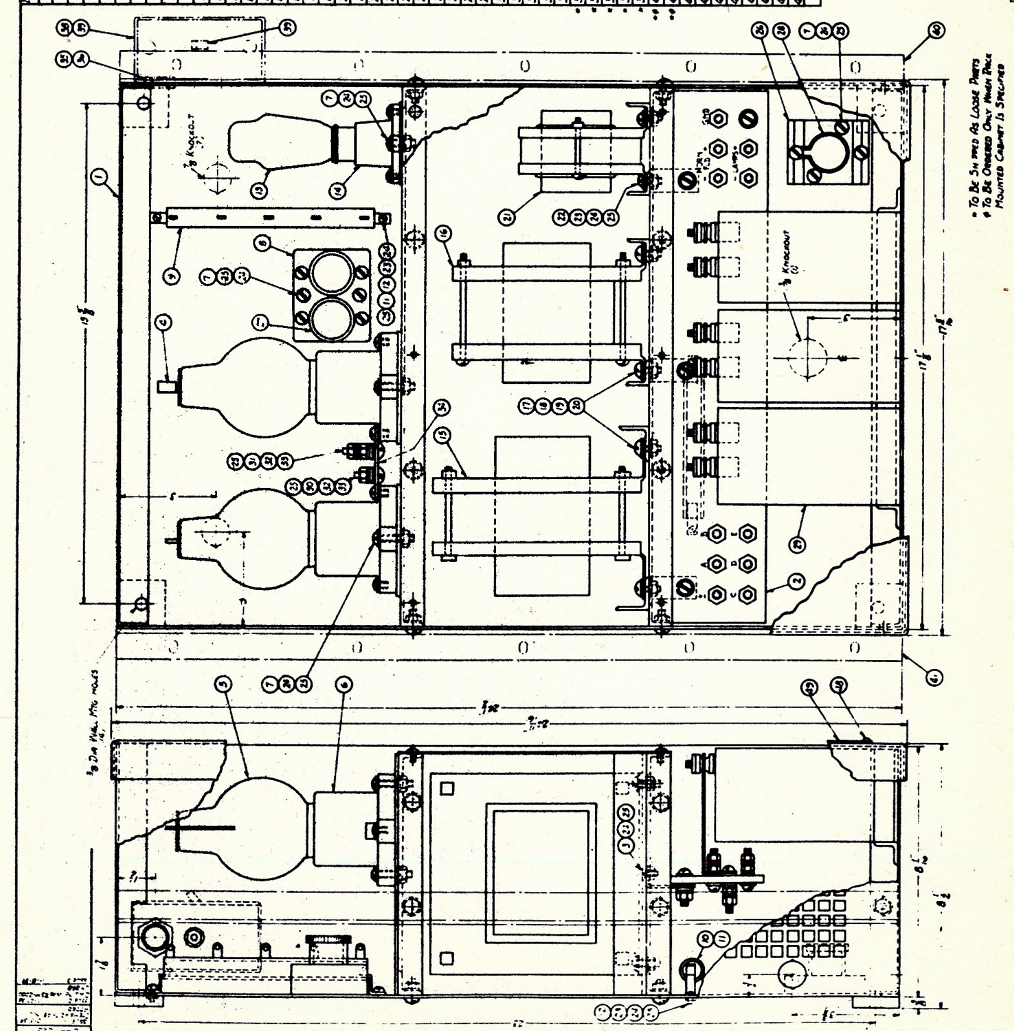

RPU-2548

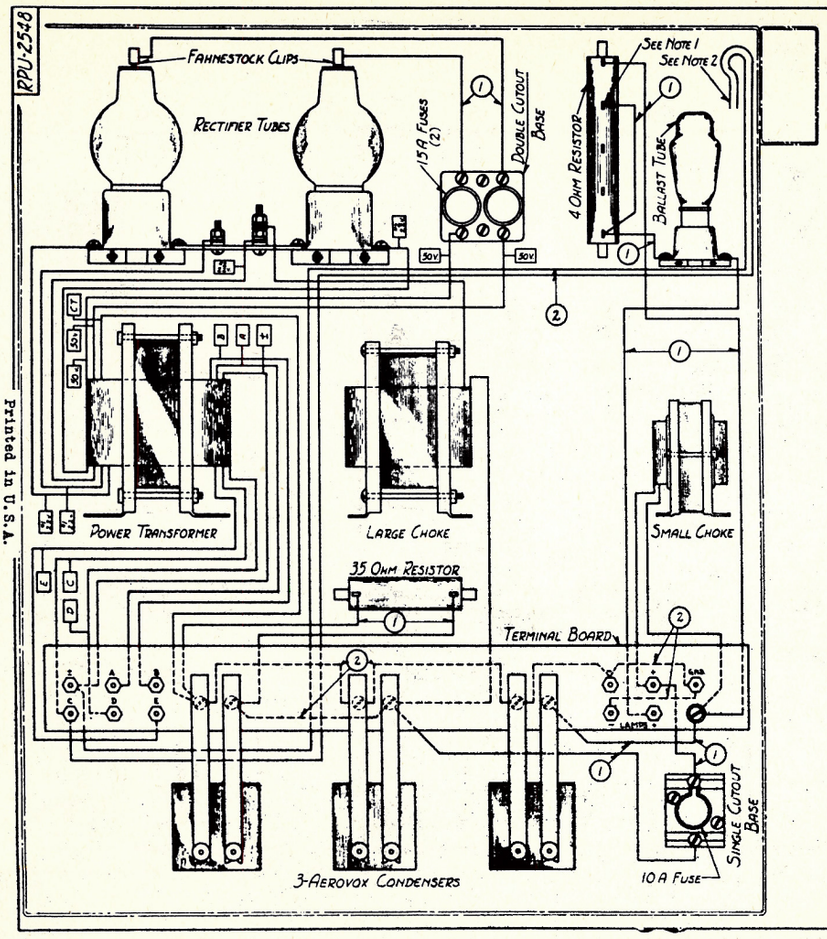

Item No	Pc Req'd	Name & Description	CHANGES
1	8	#16 Deltabeston Flexible Strand Cable, Black Asbestos Braid (600 Volt)	
2	12	#16 Deltabeston Switchboard & Rheostat Wire Black Asbestos Braid, Solid Conductor, 600.	

General Note
Tin Ends Of Flexible Cables Before Connecting.
Dress All Leads To Have Right Angle Bends So Far As Possible, And To Be Close To Cabinet Walls & Tube Shelf

Note: 1
Tin End But Do Not Solder On Resistor. (Field Adjustment.)

Note: 2
(Leads From 2 & C On Terminal Block)
To Be Connected To Switch During Installation. May Be Rerouted To Opposite Side For Left-Hand Switch Box Mounting.

Associated Drawing
RPU-2547 Schematic Diagram

R.U. 7500
Used On RPU-7500

MM-1000 Power Unit
Wiring Diagram

Material | Finish
Drawn By | Checked By | Approved | Date
Dwg No RPU-2548
Mot. Graph Inc Chicago Ill.

Printed in U.S.A.

ALTEC SERVICE CORPORATION
MOTIOGRAPH-MIRROPHONIC SOUND SYSTEMS

PU-7502 POWER UNIT

APU-2615

NOTE: UNLESS OTHERWISE SPECIFIED ALL
DECIMAL DIMS. ± .001
FRACTIONAL DIMS. ± .005

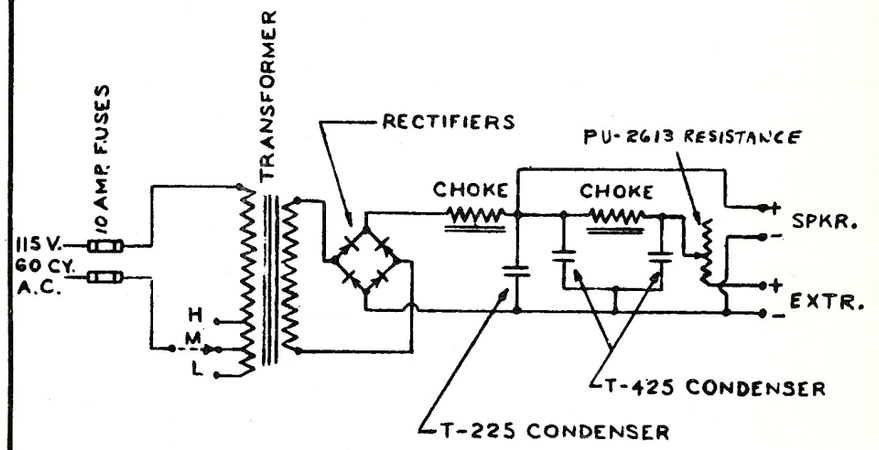

MAJOR PARTS

ITEM	NO. REQ'D.
TRANSFORMER NO. B-L443	1
CHOKE NO. 1758	2
RECTIFIER NO. 562C1	2
CONDENSER NO. T-225	1
CONDENSER NO. T-425	1
2 POLE FUSE BLOCK	1
PU-2613 RESISTANCE, 40HM, 160 WATT	1

PU-7502 POWER UNIT - SCHEMATIC DIAGRAM

ISSUE	DATE
1	9-12-46
2	11-26-46

MOTIOGRAPH INC.
CHICAGO, ILL.

SIZE A

DRAWN:
TRACED:
CHECKED:
APRVD.:

DWG. NO.
APU-2615

Printed in U.S.A.

PU-7502 POWER UNIT

ALTEC SERVICE CORPORATION

APU-2614

NOTE: UNLESS OTHERWISE SPECIFIED ALL
DECIMAL DIMS. ± .001
FRACTIONAL DIMS. ± .005

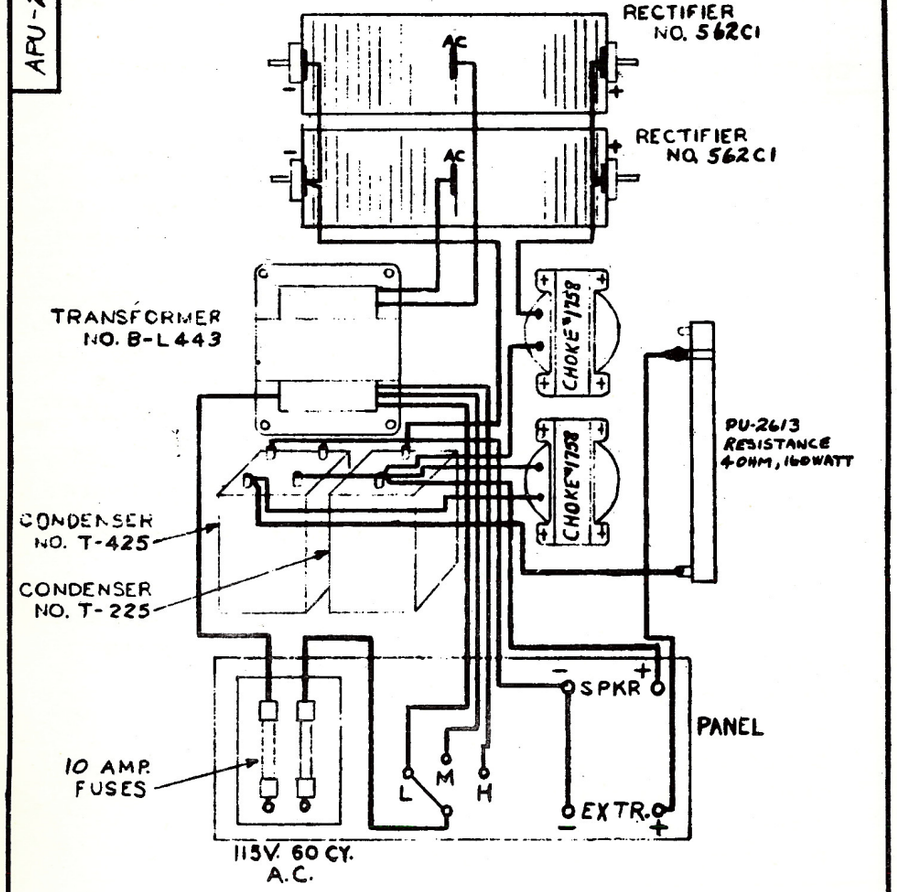

PU-7502 POWER UNIT - WIRING DIAGRAM

ISSUE	DATE
1	9-12-46
2	11-26-46

MOTIOGRAPH INC.
CHICAGO, ILL.

SIZE A

DRAWN: Rawin
TRACED:
CHECKED:
APRVD.:

DWG. NO. APU-2614

6-24-49

5312.99

ALTEC SERVICE CORPORATION
MOTIOGRAPH POWER UNIT,
SOUND EQUIPMENT BULLETIN SE-7520
ADDENDUM #1

1. SUBJECT - Replacement for SE-2605 (CE-206) Mercury Vapor Rectifier.

2. GENERAL - Field and laboratory tests have shown that the 189048 Tungar Bulb may be used as a direct replacement for the SE-2605 (CE-206) Mercury Vapor Rectifier under the following conditions:

   (a) Both rectifier bulbs must be of the same type.

   (b) Local conditions must be such that the lower output voltage, present when the tungar bulbs are used, may be compensated for by adjustment of the series resistance in the power unit.

3. MODIFICATION - When the 189048 Tungar Bulbs are first installed, it is recommended that the MA-2521 Plate Switch (S-2) be strapped out.

4. MERCHANDISING - When present SE-2605 (CE-206) spares have been placed in service, order replacements as 189048 Tungar Bulbs.

Issued by
Engineering Department
Printed in U.S.A.

MOTIOGRAPH

SOUND EQUIPMENT BULLETIN POWER UNIT, SE-7520

1. DESCRIPTION AND CHARACTERISTICS

Type	Chassis type, full wave, filtered rectifier
Output	Exciter lamp circuit, 18 volts, 4 amperes, D. C., (two 9 V. 4 A. lamps in series) Loudspeaker field circuit, 24 volts, 3 amperes, D. C.
Filtering	Exciter lamp circuit, 0.01 volt max. AC component. Loudspeaker field circuit, 0.3 volt max. AC component.
Power Supply	105-125 volts, 60 cycles, 375 watts
Accessories	2 - SE-2605 Rectifier Tubes (order separately) 1 - MA-7000 Cabinet (order separately) 2 - 6 ampere plug fuses (internal, AC line) 1 - 6 ampere plug fuse (internal, EXC. output) 1 - 3 ampere plug fuse (internal, SPKR. output)
Dimensions (cabinet)	17-5/16" wide, 19-3/8" high, 10-1/8" deep
Weight (with cabinet)	55 pounds

2. INSTALLATION

2.1 Mount cabinet on rack using mounting angles, or on wall using holes in back of cabinet. If rack mounted, place at top of rack because of heat developed during operation. After the wiring has been run, slide the chassis on the brackets and secure it in place with the two 8-32 screws and nuts provided.

2.2 The power unit may be mounted in the booth or in an adjoining room if local regulations require it. The location must have adequate ventilation to carry off the heat developed in the power unit.

3. OPERATION

3.1 Preheat rectifier tubes for 3 minutes (filament switch) before applying plate voltage (plate switch).

4. ADJUSTMENTS

(a) Connect the plate transformer primary tap to the terminal (A, B, C, or D) which gives the best approximation to 24 volts D. C. potential as measured at the field terminals of loudspeaker units on the stage. As received, the taps will be found connected to terminal B. With an AC line voltage of 115 volts and average circuit resistance conditions this will usually be the best tap to use. Output voltage increases as the tap is moved to C or D, and decreases when the tap is connected to terminal A. Loudspeaker unit performance is essentially the same over a field terminal range of 20 to 30 volts.

(b) After the plate transformer primary tap has been adjusted as outlined in (a), adjust the shorting strap on the exciter lamp resistance to give a current of approximately 3.8 amperes in the series circuit at average line voltage.

ASSOCIATED DRAWINGS

RSE-2622 Wiring Diagram and Schematic (Replaces ASE-2613 Schematic, & ASE-2614 Wiring Diagram)

Issued by
Engineering Department
Printed in U. S. A.

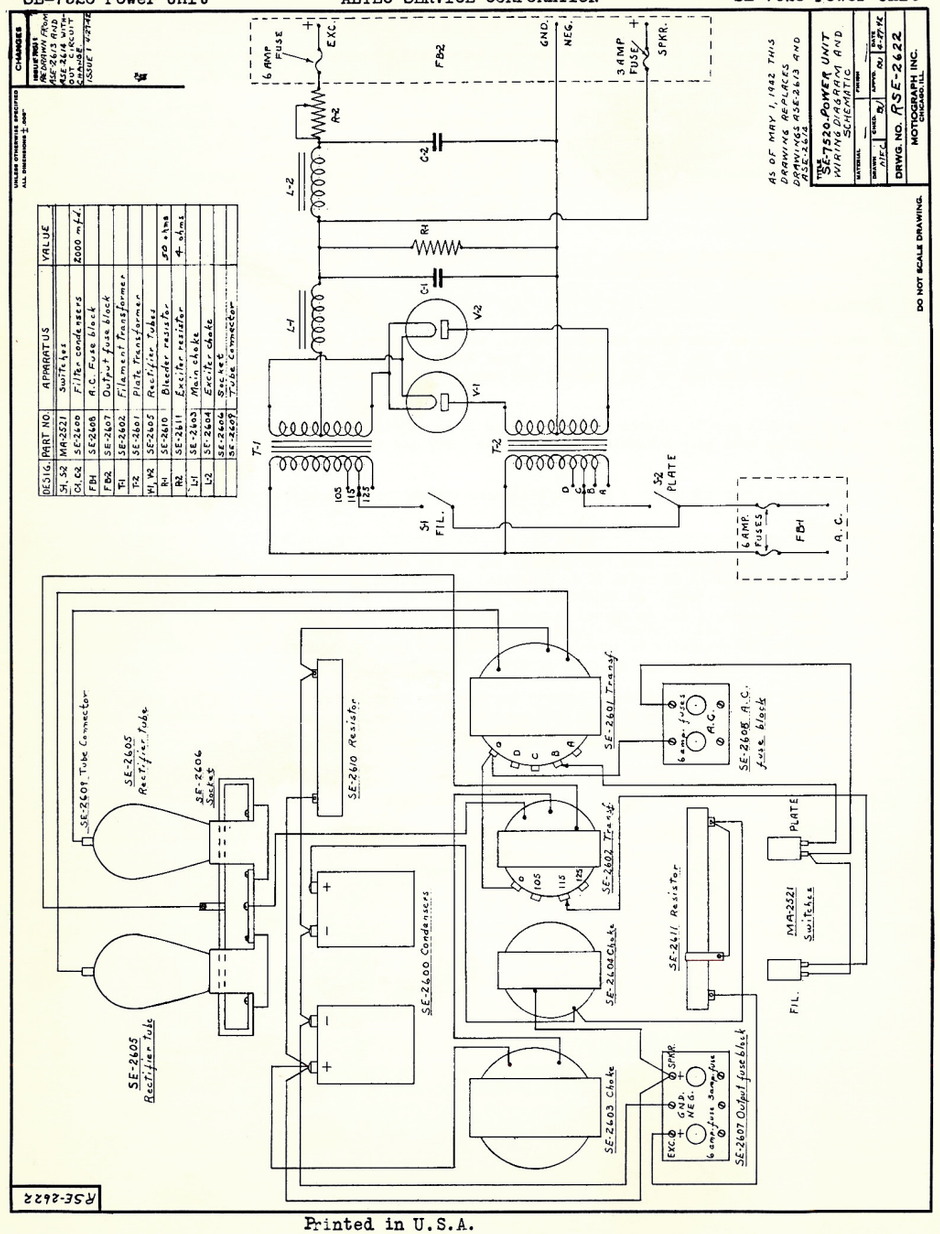

Printed in U.S.A.

1. DESCRIPTION AND CHARACTERISTICS

Type . . . . . .Transformer mounted on angle iron frame
Primary. . . . . .105-125 Volts, 60 cycles, 50 Watts
Secondary. . . . . .18 Volts - 4 Amp AC
Size . . . . . .16-3/4" x 5" x 3-1/2"
Weight . . . . . .8 lbs.

2. USE

2.1 This Auxiliary Power Unit which is to be mounted in the MA-7000 Cabinet below the sound system's regular SE-7520 Power Unit provides facility for emergency operation of system exciter lamps on AC in case of failure of DC exciter lamp supply.

3. INSTALLATION

3.1 Disconnect the wiring to the SE-7520 Power Unit and bend the leads out of the way while the auxiliary unit is being put in place in the bottom of the MA-7000 Cabinet. Cabinets having cover fastening screws do not have clearance for the unit's frame, so the screws must be removed while it is being installed; this is unnecessary in cabinets having covers held on with latches. Align the tapped holes in the power unit end brackets with the lowest holes in the cabinet sides and anchor the unit in place with the screws provided. Strap the upper terminals of the fuse block to the corresponding terminals of the SE-7520 Power Unit and reconnect the AC supply circuit. Strap the "EXC- DC IN" terminals to the regular power unit's "EXC" and "GND-Neg" terminals. The external leads formerly going to these terminals are reconnected to the auxiliary unit's "EXC.OUT" terminals instead.

4. OPERATION

4.1 With the AC-DC switch S-2 in the DC position, and with a suitable DC ammeter connected into the series exciter lamp circuit, adjust the short-strap on the exciter circuit resistor of the SE-7520 Power Unit to give the desired exciter lamp current. Then replace the ammeter with an AC meter of similar range and operate the AC-DC switch to the AC position. Make certain that the 3 ampere fuses are in place and then throw the toggle switch S-1 to its "ON" position. Adjust the shorting strap on the auxiliary power unit's resistor to provide the same current value as in the case of DC operation.

4.2 For normal system operation on DC the toggle switch S-1 should be in its "OFF" position and the AC-DC switch S-2 in its DC position. In changing from DC to AC operation it is advisable though not absolutely necessary, to first shut off both the plate switch of the regular power unit and the toggle switch of the auxiliary power unit in order to prevent destructive arcing at the AC-DC switch contacts.

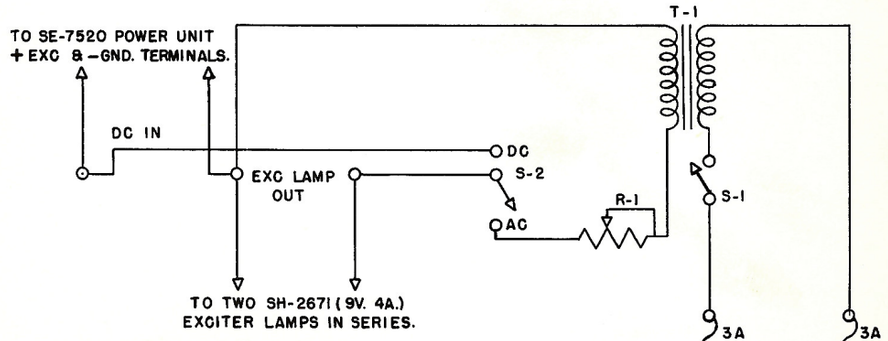

DESIG. NO.	PART NO.	APPARATUS
S-1	MA-2521	SWITCH
S-2	SE-2732	SWITCH
FB-1	SE-2608	FUSE BOX
R-1	SE-2611	RESISTOR - 4 OHMS - 100 W
T-1	SE-2642	TRANSFORMER

Issued by
Engineering Department
Printed in U. S. A.

D. C. Collins

1. DESCRIPTION AND CHARACTERISTICS

Type -	Chassis type, full-wave, filtered rectifier
Output -	SE-7570-A-Two exciter lamp circuits - each 9 volts, 4 amperes, D.C. SE-7570-B-Three exciter lamp circuits, each 9 volts, 4 amperes. SE-7570-D-Two exciter lamp circuits with separate power transformer for improved emergency operation.
Filtering -	Less than 0.1% max. AC component
Power Supply -	105-125 volts, 50/60 cycles, 250 watts
Accessories -	Two SE-2887 (NL-649) Rectifier Tubes (order separately). One MA-7000 Cabinet (order separately. For rack mounting order also one MA-7018 Set Rack Mounting Angles).
Dimension (cabinet)	17-5/16" wide, 19-3/8" high, 10-1/8" deep.
Weight (with cabinet)	55 pounds
Associated Drawings	RSE-2888, SE-7570-A Power Unit, Schematic and Wiring Diagrams. RSE-2889, SE-7570-B Power Unit, Schematic and Wiring Diagrams. RSE-2957, SE-7570-D Power Unit, Schematic and Wiring Diagrams.

2. INSTALLATION

(a) The power unit may be mounted in the booth or in a separate power equipment room if local regulations require it. The location must have adequate ventilation to carry off the heat developed.

(b) Mount cabinet on the amplifier rack using MA-7018 mounting angles or on the wall using holes in cabinet back. If rack mounted, preferred location is at top of rack because of heat developed during operation. Separate #14 RH circuits are required to the EXC. terminals of each SH-7500 Reproducer of the sound system and a #14 RH wire must connect the power unit GND. terminal to the main sound system ground. After the wiring has been run, slide the chassis on the cabinet brackets and secure it in place with the two 8-32" screws and nuts provided with the cabinet. Connect the A.C. supply, the exciter lamp leads, and the ground lead to the designated terminals.

Issued by
Engineering Department
Printed in U. S. A.

3. OPERATION

(a) Ascertain the average line voltage prevailing in the projection room and connect the T-1 transformer primary tap to the terminal (105, 115 or 125) most nearly corresponding to the average line voltage. If the power unit is type SE-7570-A for two machines, check to make certain that the two BLK-RD plate leads are connected to the transformer secondary taps marked "35" and that the SLATE wire feeding the "AC" side of S-2 is connected to the "21" terminal. The corresponding terminals for the three machine SE-7505-B Power Unit are marked "46" and "30" respectively.

(b) Set the shorting strap on the exciter circuit control resistance R-2 so that all the resistance is in the circuit. Check to see that 6A fuses are installed in the POWER and LOAD fuse holders, set the POWER and LOAD switches to their OFF positions, and snap the CIRCUIT INDICATOR switches to their DOWN positions. Install the two rectifier tubes in their sockets. Snap the POWER switch to ON (to DC in case of SE-7570-D) and permit the rectifier tubes to heat initially for approximately three minutes. Then turn the LOAD switch to DC; the characteristic blue glow of mercury vapor rectifiers should be visible in the tubes, and the reproducer exciter lamps should light. After the power unit has been in operation long enough to permit all components to reach stable operating temperatures, connect a D.C. ammeter of suitable range (0-5 or 0-10 amperes) into the series exciter lamp circuit at any of the power unit EXC terminals, or at one of the reproducer EXC terminals, and set the current to 3.8 amperes by adjusting the position of the shorting strap on R-2. This adjustment should be made when the line voltage is somewhere near its average value so that the current will be neither excessively high nor excessively low as the line voltage departs from this value. Snap the LOAD switch to its OFF position and remove the ammeter from the circuit. Except for the initial preheating period, the POWER switch need be turned ON only about 60 seconds before the LOAD switch is thrown to its DC position. In case of drive-in theatre where temperature is below normal a longer warm-up period should be used. Failure to allow this short preheating period will cause arc-backs in the tubes, and consequent serious shortening of their lives. If the line voltage fails for any reason, the LOAD switch should immediately be thrown to its OFF position.

(c) In locations subject to frequent power interruptions the necessity for preheating the mercury vapor rectifier tubes may be objectionable. In such cases power units may be ordered with tube sockets installed for G.E. Tungar Rectifier Tubes #12X825. Power unit operation is essentially the same using either tube type; the Tungar tubes need no preheating, but have considerably shorter rated life than the mercury vapor tubes. The Tungar tube sockets mount over the regular four prong sockets in the power units, and are connected in parallel with them. For field installation they may be ordered as an SE-7177 Tungar Adapter Kit, which includes two sockets with connection leads, and mounting screws and fiber washers. The required #12X825 Tungar Tubes must

be obtained or ordered separately. To mount the sockets, remove the four binding head screws between the four prong sockets from their weldnuts. Place two fiber washers over each weldnut and mount the sockets, using the 8-32 x ½" binding head screws supplied in the kit. Thread the connection leads through the porcelain bushing between the sockets, and on the under side of the chassis, connect the leads in parallel with the correspondingly color-coded leads to the terminals of the four prong sockets (green to terminal #1, white to #4, and the red-black plate lead to terminal #2.) Do not disturb the leads on socket terminals #3, which are used merely as circuit junction points.

(d) Reference to the power unit schematic diagrams will show that the 32 volt circuit indicator pilot lamps are connected in parallel with each exciter lamp output circuit. On the normal 9 volt drop across each lamp they burn very dimly, but come to full brilliancy if that lamp burns out, or if its circuit is otherwise opened. Operation on the other lamp, or lamps, is restored by throwing the toggle switch below the bright indicator to its UP position, thus closing the series circuit via the associated dummy load resistor. This operation completely disconnects the exciter lamp circuit in trouble, and burned out lamps may therefore be replaced without interference to other lamps, and without arcing at socket contacts. Indicator lamps should last indefinitely, normally operating so far under rated voltage; in the event of filament failure due to vibration or accident, they may be replaced easily by pulling their sockets off the socket mounting brackets and out into the open. Socket leads are sufficiently long to permit this.

(e) In the event of rectifier tube failure during a performance, exciter lamps may be temporarily operated on raw A.C. by snapping the LOAD switch S-2 down to its AC position until the tube can be replaced. When SE-7570-D power unit is used, both S-1 and S-2 should be in the DOWN or AC position. This removes the T-1 Power Transformer, tubes, chokes and condensers from the circuit.

4. MAINTENANCE

(a) Replace rectifier tubes and indicator lamps as they become inoperative. Periodically check connections for looseness, and clean and burnish tube base contacts to prevent heating and possible erratic variations in output current. Dust and dirt should be blown or cleaned out of the power unit frequently to insure proper ventilation. Current in the series output circuits should be checked regularly, and after replacement of rectifier tubes. Power and load circuit fuses should be inspected occasionally for contact corrosion; yearly replacement will usually forestall fuse failure due to crystalization from heat and vibration.

(b) Ordering information for replacement parts is given on the circuit diagrams.

Issued by
Engineering Department
Printed in U. S. A.

ALTEC SERVICE CORPORATION
MOTIOGRAPH SOUND SYSTEMS

SE-7570-A POWER UNIT

RSE-2888

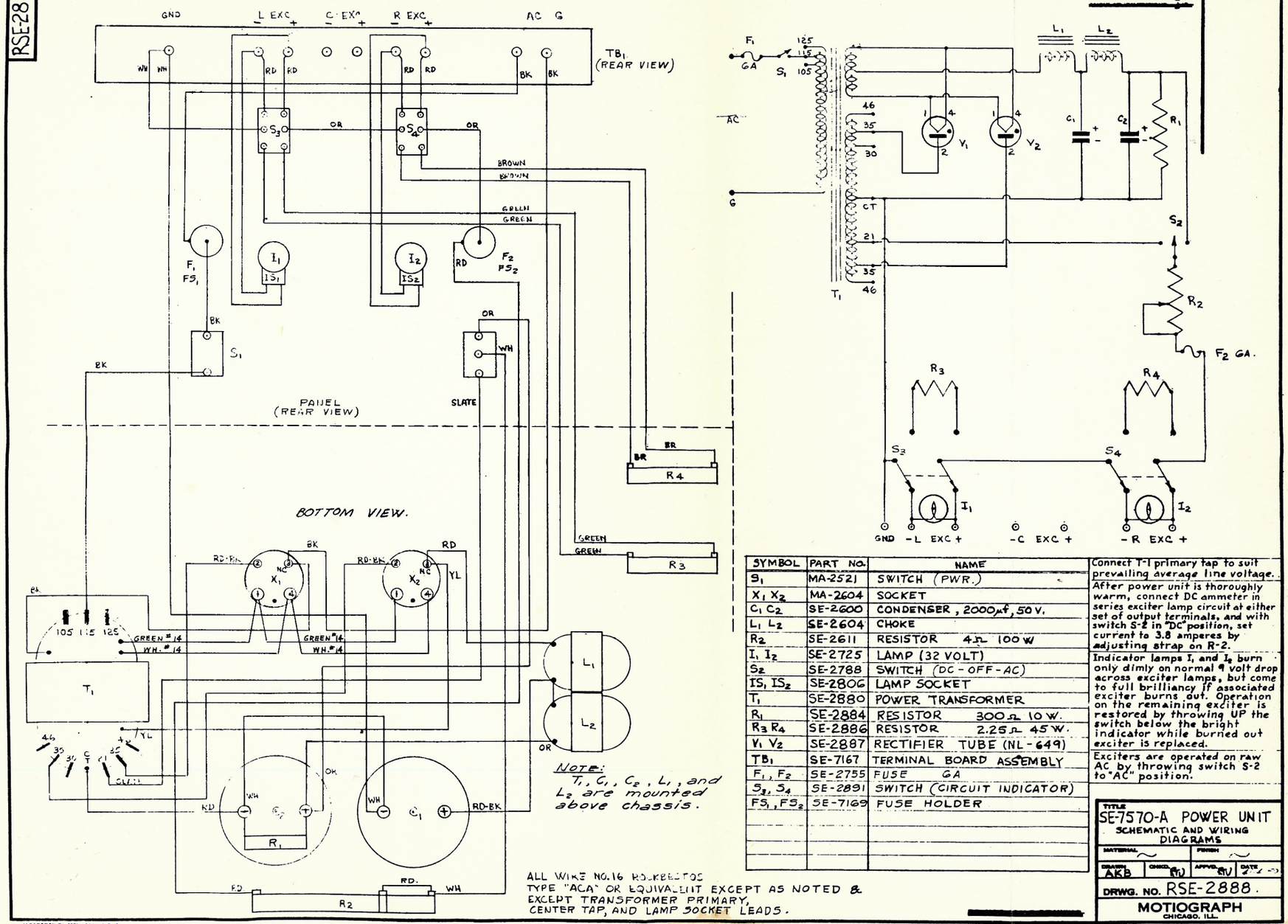

Note: T1, C1, C2, L1, and L2 are mounted above chassis.

ALL WIRE NO.16 R.U.R.B.E.T.O.S TYPE "ACA" OR EQUIVALENT EXCEPT AS NOTED & EXCEPT TRANSFORMER PRIMARY, CENTER TAP, AND LAMP SOCKET LEADS.

SYMBOL	PART NO.	NAME
S_1	MA-2521	SWITCH (PWR.)
X_1 X_2	MA-2604	SOCKET
C_1 C_2	SE-2600	CONDENSER, 2000μf, 50 V.
L_1 L_2	SE-2604	CHOKE
R_2	SE-2611	RESISTOR 4Ω 100 W
I_1 I_2	SE-2725	LAMP (32 VOLT)
S_2	SE-2788	SWITCH (DC-OFF-AC)
IS, IS_2	SE-2806	LAMP SOCKET
T_1	SE-2880	POWER TRANSFORMER
R_1	SE-2884	RESISTOR 300Ω 10 W.
R_3 R_4	SE-2886	RESISTOR 2.25Ω 45 W.
V_1 V_2	SE-2887	RECTIFIER TUBE (NL-649)
TB_1	SE-7167	TERMINAL BOARD ASSEMBLY
F_1, F_2	SE-2755	FUSE GA
S_3, S_4	SE-2891	SWITCH (CIRCUIT INDICATOR)
FS_1, FS_2	SE-7169	FUSE HOLDER

Connect T-1 primary tap to suit prevailing average line voltage.

After power unit is thoroughly warm, connect DC ammeter in series exciter lamp circuit at either set of output terminals, and with switch S-2 in "DC" position, set current to 3.8 amperes by adjusting strap on R-2.

Indicator lamps I_1 and I_2 burn only dimly on normal 9 volt drop across exciter lamps, but come to full brilliancy if associated exciter burns out. Operation on the remaining exciter is restored by throwing UP the switch below the bright indicator while burned out exciter is replaced.

Exciters are operated on raw AC by throwing switch S-2 to "AC" position.

CHANGES
ISSUE NO. 1 4/14/53

TITLE
SE-7570-A POWER UNIT
SCHEMATIC AND WIRING DIAGRAMS

MATERIAL | FINISH

DRAWN AKB | CHECKED | APPVD. GU | DATE 4-4-53

DRWG. NO. RSE-2888.

MOTIOGRAPH
CHICAGO, ILL.

Printed in U.S.A.

RSE-2597

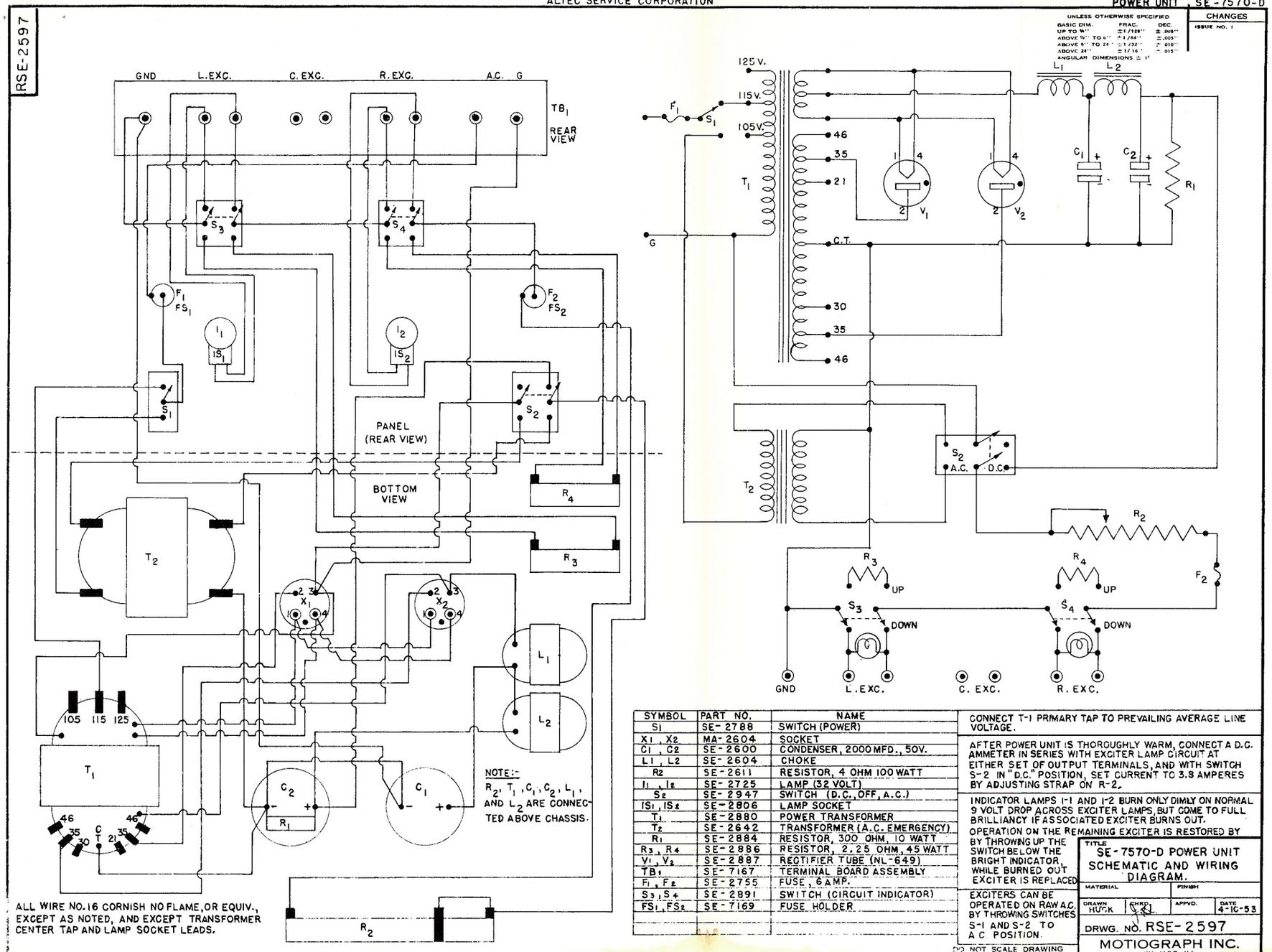

UNLESS OTHERWISE SPECIFIED

BASIC DIM.	FRAC.	DEC.
UP TO 6"	± 1/128"	± .008"
ABOVE 6" TO 24"	± 1/64"	± .005"
ABOVE 24"	± 1/32"	± .010"
ANGULAR DIMENSIONS ± 1°		± .015"

CHANGES
ISSUE NO. 1

SYMBOL	PART NO.	NAME
S1	SE-2788	SWITCH (POWER)
X1, X2	MA-2604	SOCKET
C1, C2	SE-2600	CONDENSER, 2000 MFD., 50V.
L1, L2	SE-2604	CHOKE
R2	SE-2611	RESISTOR, 4 OHM 100 WATT
I1, I2	SE-2725	LAMP (32 VOLT)
S2	SE-2947	SWITCH (D.C., OFF, A.C.)
IS1, IS2	SE-2806	LAMP SOCKET
T1	SE-2880	POWER TRANSFORMER
T2	SE-2642	TRANSFORMER (A.C. EMERGENCY)
R1	SE-2884	RESISTOR, 300 OHM, 10 WATT
R3, R4	SE-2886	RESISTOR, 2.25 OHM, 45 WATT
V1, V2	SE-2887	RECTIFIER TUBE (NL-649)
TB1	SE-7167	TERMINAL BOARD ASSEMBLY
F1, F2	SE-2755	FUSE, 6 AMP.
S3, S4	SE-2891	SWITCH (CIRCUIT INDICATOR)
FS1, FS2	SE-7169	FUSE HOLDER

CONNECT T-1 PRIMARY TAP TO PREVAILING AVERAGE LINE VOLTAGE.

AFTER POWER UNIT IS THOROUGHLY WARM, CONNECT A D.C. AMMETER IN SERIES WITH EXCITER LAMP CIRCUIT AT EITHER SET OF OUTPUT TERMINALS, AND WITH SWITCH S-2 IN "D.C." POSITION, SET CURRENT TO 3.8 AMPERES BY ADJUSTING STRAP ON R-2.

INDICATOR LAMPS I-1 AND I-2 BURN ONLY DIMLY ON NORMAL 9 VOLT DROP ACROSS EXCITER LAMPS, BUT COME TO FULL BRILLIANCY IF ASSOCIATED EXCITER BURNS OUT. OPERATION ON THE REMAINING EXCITER IS RESTORED BY BY THROWING UP THE SWITCH BELOW THE BRIGHT INDICATOR, WHILE BURNED OUT EXCITER IS REPLACED.

EXCITERS CAN BE OPERATED ON RAW A.C. BY THROWING SWITCHES S-1 AND S-2 TO A C POSITION.

DO NOT SCALE DRAWING

TITLE
SE-7570-D POWER UNIT SCHEMATIC AND WIRING DIAGRAM.

MATERIAL | FINISH

DRAWN	CHKD.	APPVD.	DATE
HUCK			4-16-53

DRWG. NO. RSE-2597

MOTIOGRAPH INC.
CHICAGO, ILL.

ASE-7668

UNLESS OTHERWISE SPECIFIED

BASIC DIM.	FRAC.	DEC.
UP TO 6"	±1/128"	±.008"
ABOVE 6" TO 6"	±1/64"	±.008"
ABOVE 6" TO 24"	±1/32"	±.010"
ABOVE 24"	±1/16"	±.015"

ANGULAR DIMENSIONS ± 1°

CHANGES

ISSUE NO 1
CHOKE ADDED
2-10-56
ISSUED PMC

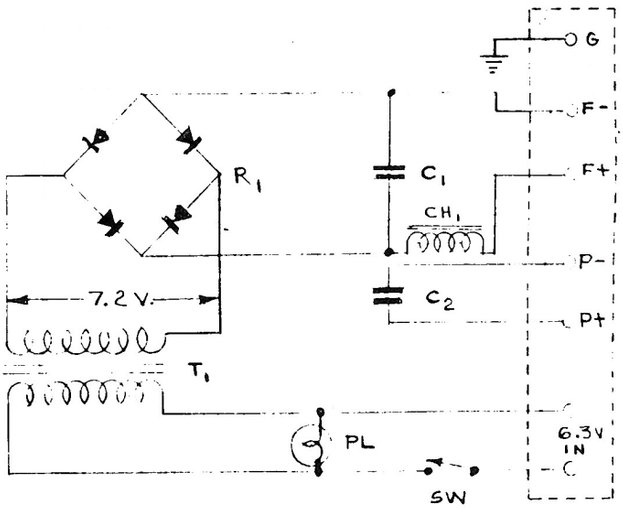

T1--SE-3163 TRANSFORMER
R1--SE-3162 RECTIFIER
C1--SE-3167 CONDENSER, 2000MFD., 15V.
C2--SE-3121 CONDENSER, 30-20-10MFD., 300V.
SW--18641 SWITCH, S.P.S.T.
PL--5701-1-1 6-8V. LAMP
CH1--SE-3199 CHOKE

DO NOT SCALE DRAWING

TITLE	SCHEMATIC SE-7668 POWER SUPPLY		
MATERIAL		FINISH	
DRAWN HUCK	CHKD.	APPVD.	DATE 1-19-56

DRWG. NO. ASE-7668

MOTIOGRAPH INC.
CHICAGO, ILL.

ALTEC SERVICE COMPANY

SE-7668 POWER SUPPLY

5313.21

Printed in U.S.A.

ASE-7669

UNLESS OTHERWISE SPECIFIED

BASIC DIM.	FRAC.	DEC.
UP TO 4"	±1/128"	±.008"
ABOVE 4" TO 6"	±1/64"	±.008"
ABOVE 6" TO 24"	±1/32"	±.010"
ABOVE 24"	±1/16"	±.015"

ANGULAR DIMENSIONS ± 1°

CHANGES

ISSUE NO 1
ADDED CHOKE
2-10-56-HUCK
ISSUE 2.

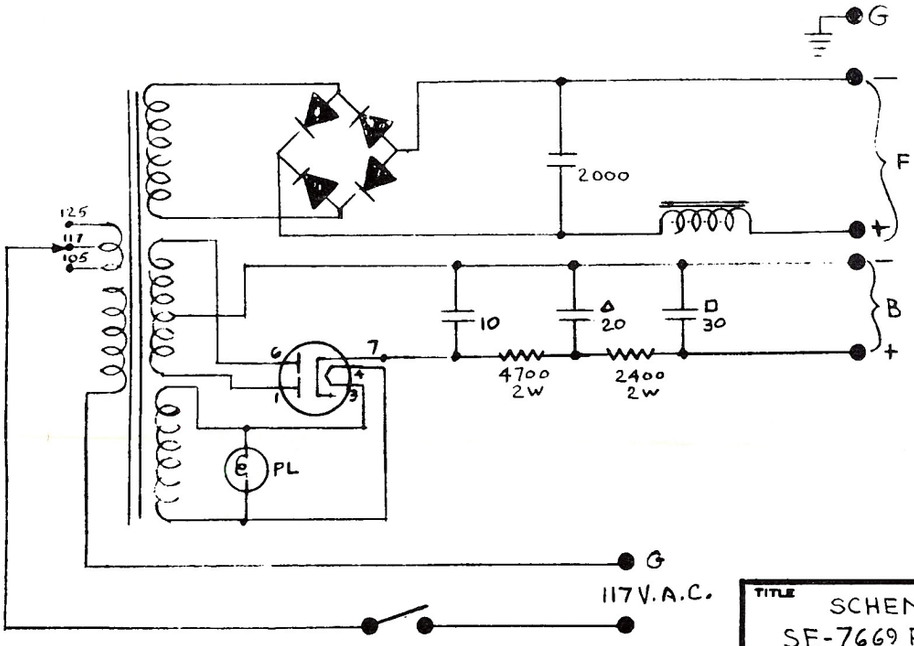

Printed in U.S.A.

DO NOT SCALE DRAWING

TITLE: SCHEMATIC
SE-7669 POWER SUPPLY

MATERIAL		FINISH	
DRAWN HUCK	CHKD.	APPVD.	DATE 1-10-56

DRWG. NO. ASE-7669

MOTIOGRAPH INC.
CHICAGO, ILL.

MOTIOGRAPH

SOUND EQUIPMENT BULLETIN REPRODUCER - HU-K-MK

1. GENERAL - There is very little information available on these reproducers. Some identifying data is given below.

1.1 HU - This model was arranged for direct low-capacity cable connection to the photocells. Mechanically the sound heads can be identified by the presence of a weighted tension roller bracket just above the film guide roller.

1.2 K - Improved version of the HU. Identified by the presence of a cast auxiliary housing on the front of the main housing containing a photocell coupling circuit and volume control potentiometer in the PEC circuit.

1.3 MK - Redesigned K to include the same type of PEC coupling unit and optical system as in W.E. 211 Reproducers.

1.4 MX - Actually an MK unit with an X appearing after the serial number. Optical system and aperture moved up as far as possible because of complaints from the field that when the MK were used with Simplex projectors, the synchronization was "off" in cases where operators could not be persuaded to use a shorter then normal lower film loop. Bracket for tension shoe of the film guide roller goes around the aperture block and PEC housing.

1.5 MK - Mirrophonic - Similar to old MK's, except that the exciter lamps and lens tubes were replaced by the same lamp and lens tube used in the SH-7500 Reproducer.

2. INTERNAL WIRING OF MK REPRODUCER

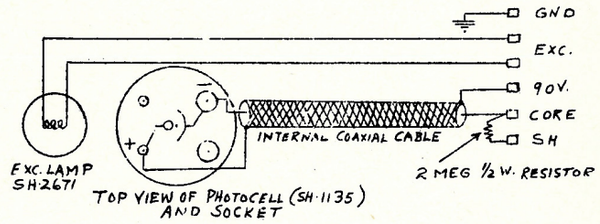

3. REPLACEMENT PARTS - (Always furnish soundhead serial number)

3.1 MX Reproducer

SH-1623 - Short lens tube (W.E. - KS-7871 or TA-4198)
SH-2205 - Lever shoulder screw (Stud for sound sprocket tension shoe bracket, holdback sprocket and guide roller shoe bracket)
SH-2208 - Bracket for sound sprocket
SH-2209 - " " holdback "
SH-2210 - Semi-circular bracket for guide roller shoe
SH-2215 - Impedance roller tension shoe (Guide roller tension shoe)
*SH-2216 - Cylindrical aperture block

3.2 MK Mirrophonic Reproducer - (Refer to photographs and Parts List, pg. 5350.13-5350.20)

SH-2526 - Long lens tube (as used in SH-7500 Reproducer)
*SH-1602 - Aperture cylinder

* When ordering SH-1602 or SH-2216 Aperture Cylinders specify lens tube in use.

ASSOCIATED DRAWINGS

Photographs (6) - MK - Mirrophonic
Parts List - MK - Mirrophonic

Issued by
Engineering Department
Printed in U. S. A.

MODEL "MK" MIRROPHONIC SOUND REPRODUCER

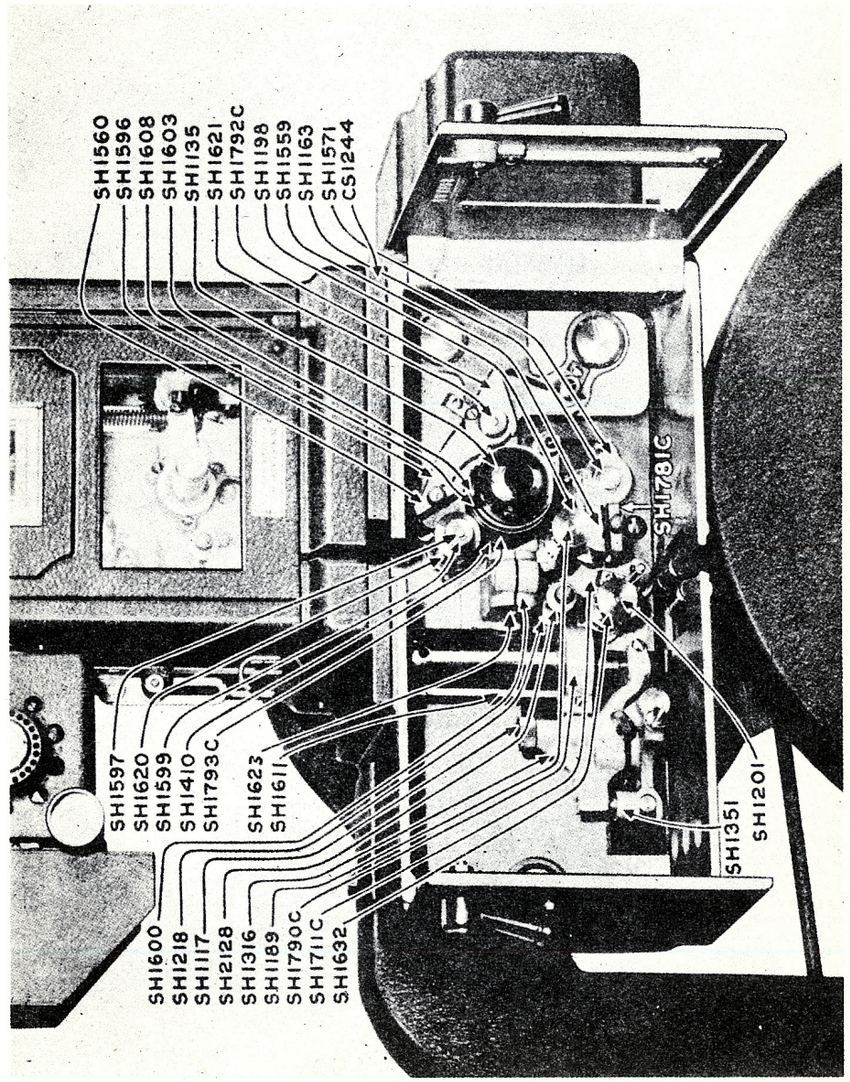

MOTIOGRAPH MODEL "MK" MIRROPHONIC SOUND REPRODUCER
Operating Side View

Printed in U.S.A.

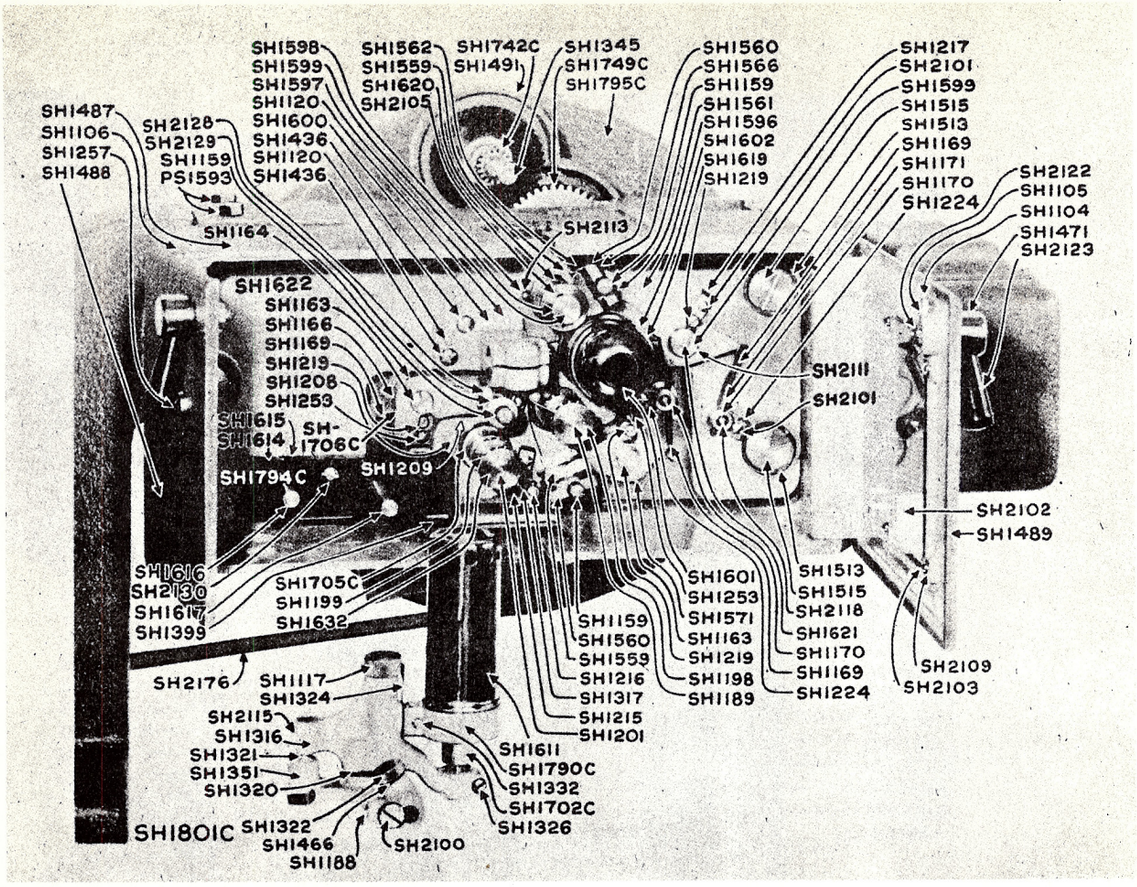

MOTIOGRAPH MODEL "MK" MIRROPHONIC SOUND REPRODUCER
Operating Side View

Printed in U.S.A.

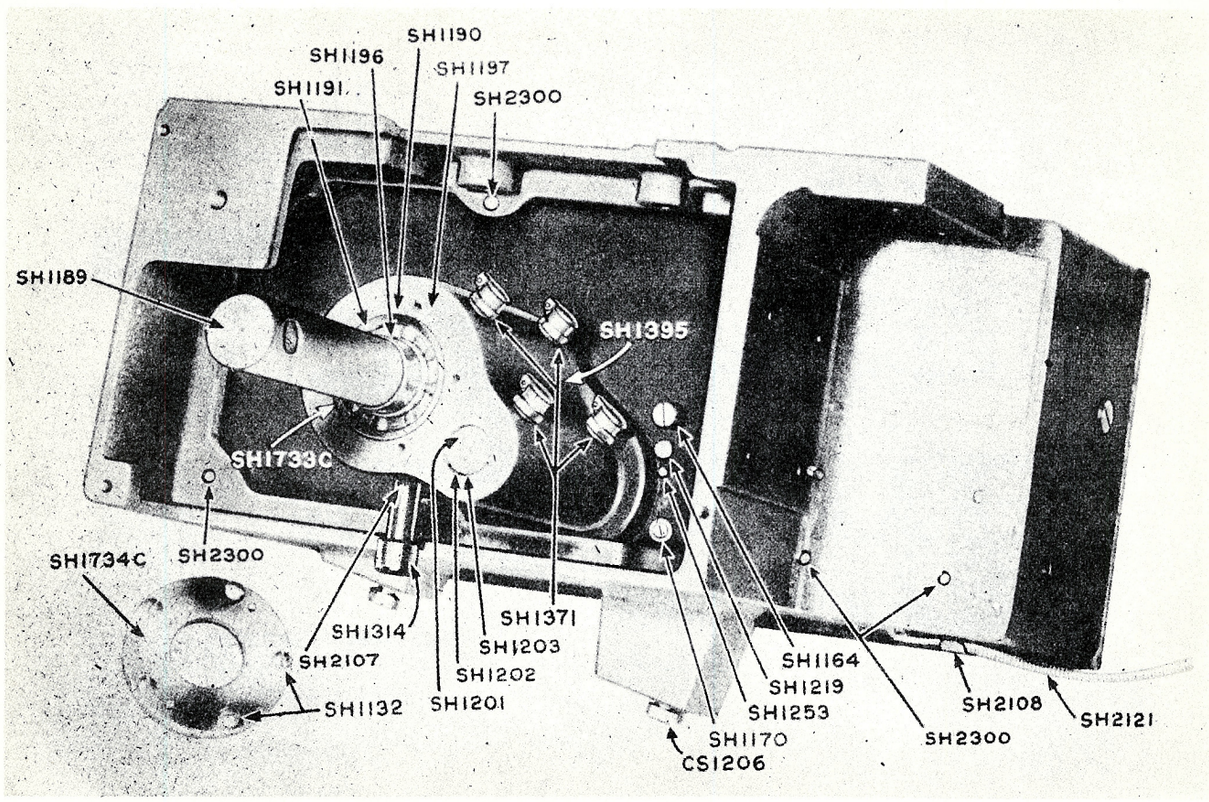

MOTIOGRAPH MODEL "MK" MIRROPHONIC SOUND REPRODUCER
Less Flywheel
Drive Side View

Printed in U.S.A.

ALTEC SERVICE CORPORATION

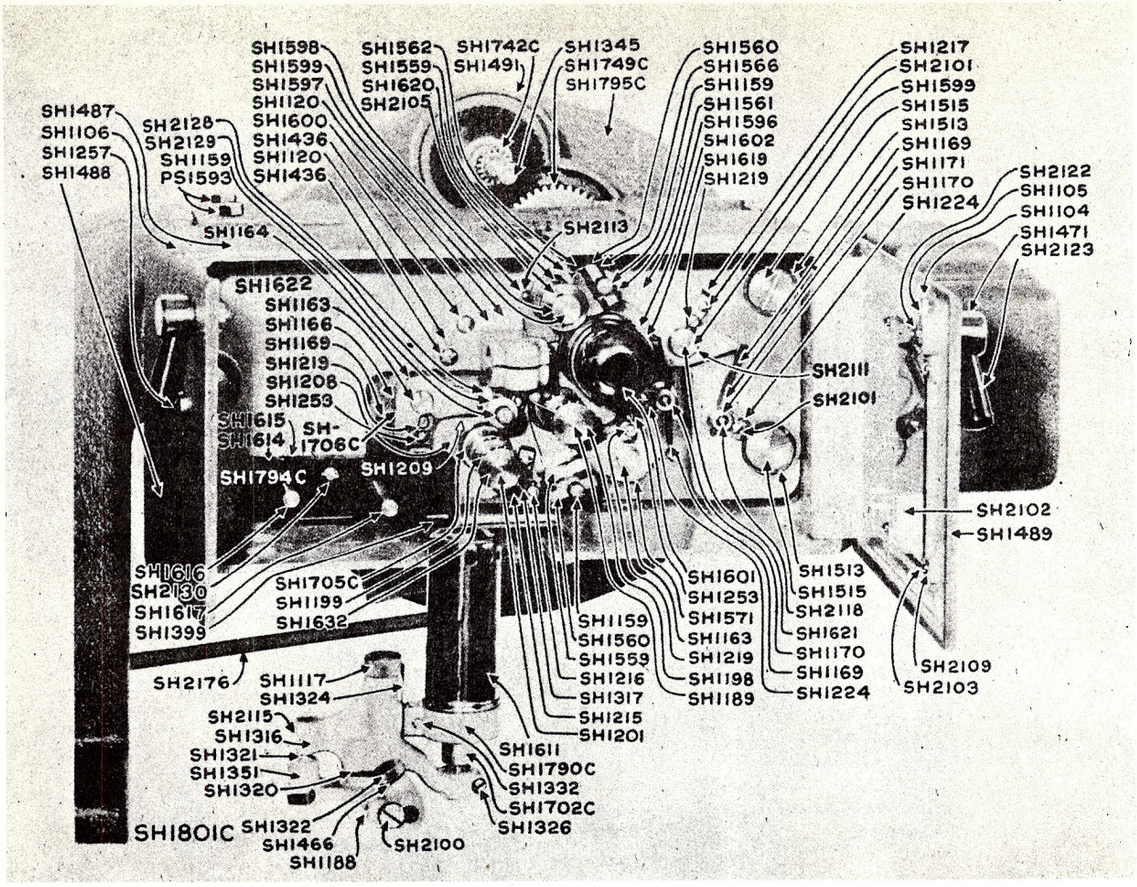

MOTIOGRAPH MODEL "MK" MIRROPHONIC SOUND REPRODUCER
Operating Side View

Printed in U.S.A.

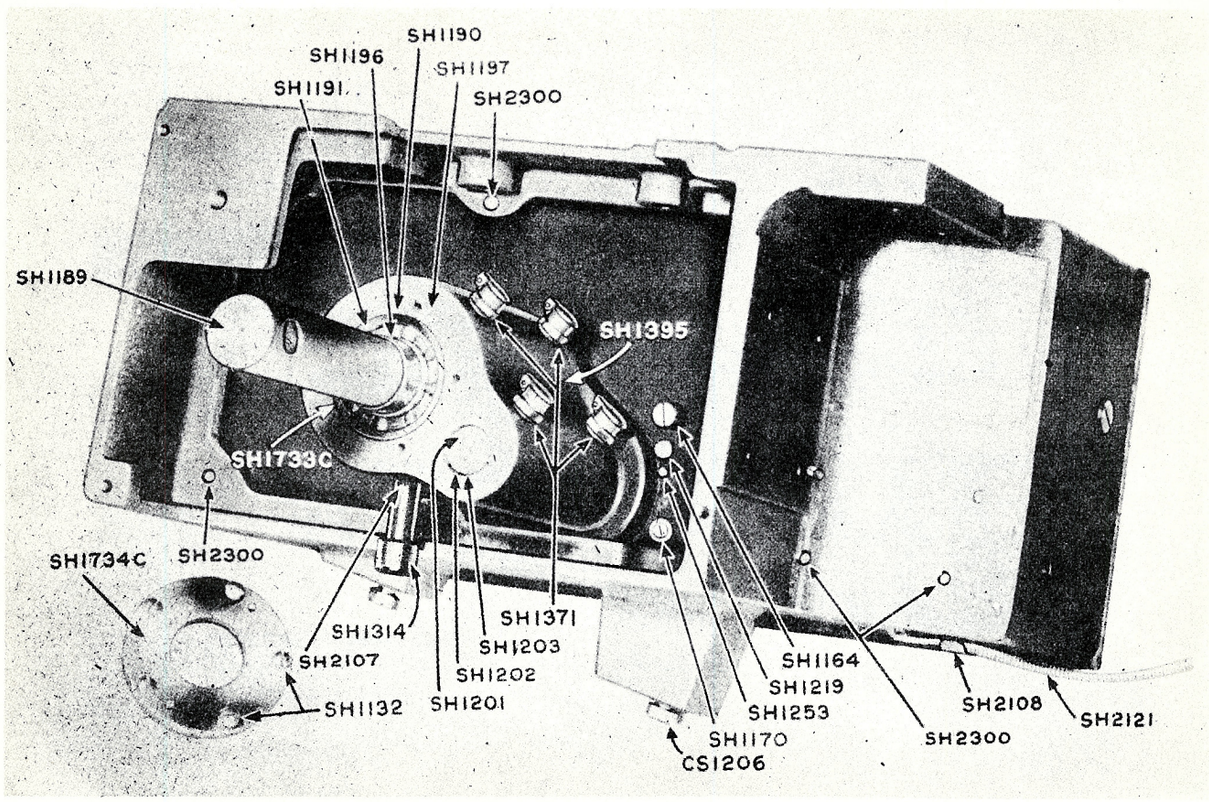

MOTIOGRAPH MODEL "MK" MIRROPHONIC SOUND REPRODUCER
Less Flywheel
Drive Side View

Printed in U.S.A.

ALTEC SERVICE CORPORATION

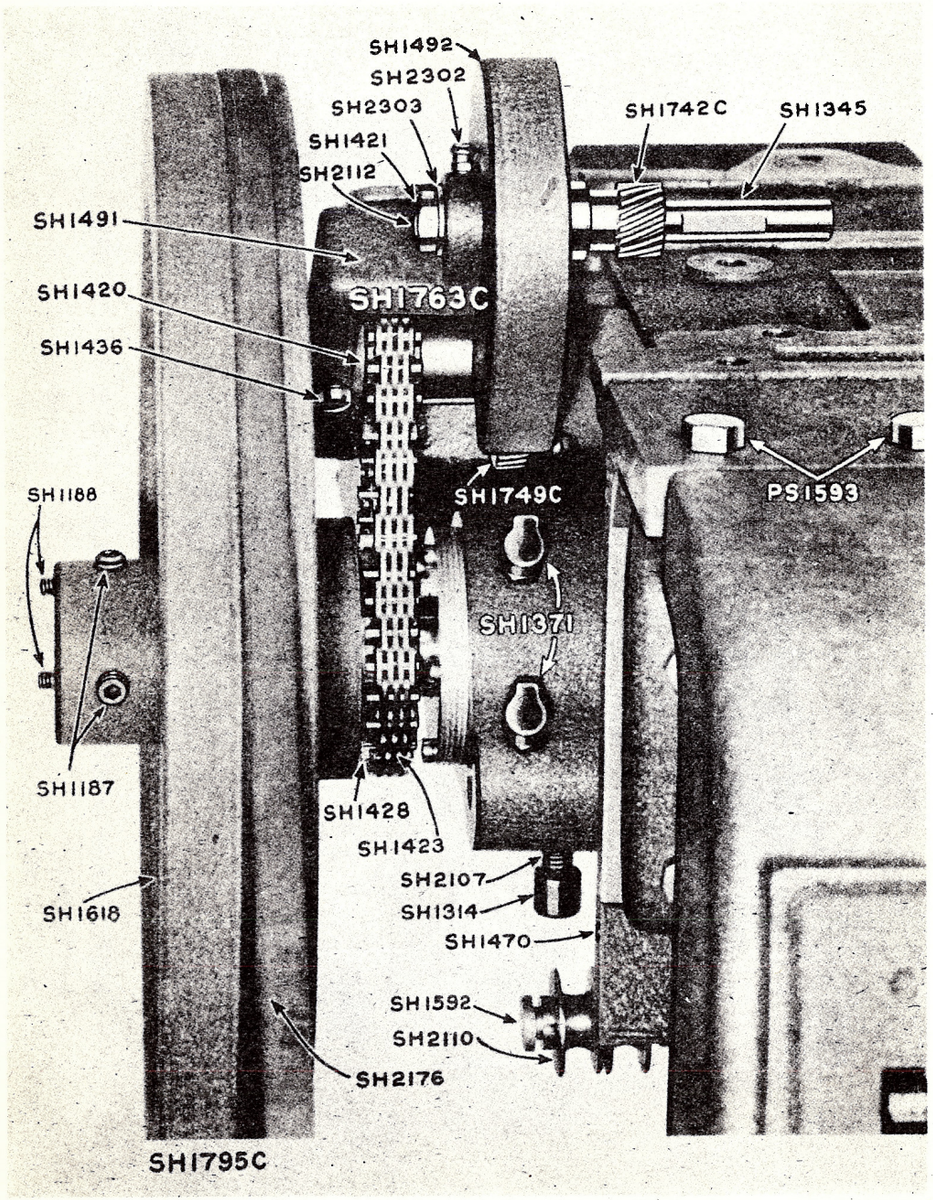

MOTIOGRAPH MODEL "MK" MIRROPHONIC SOUND REPRODUCER
MECHANISM DRIVE

Printed in U.S.A.

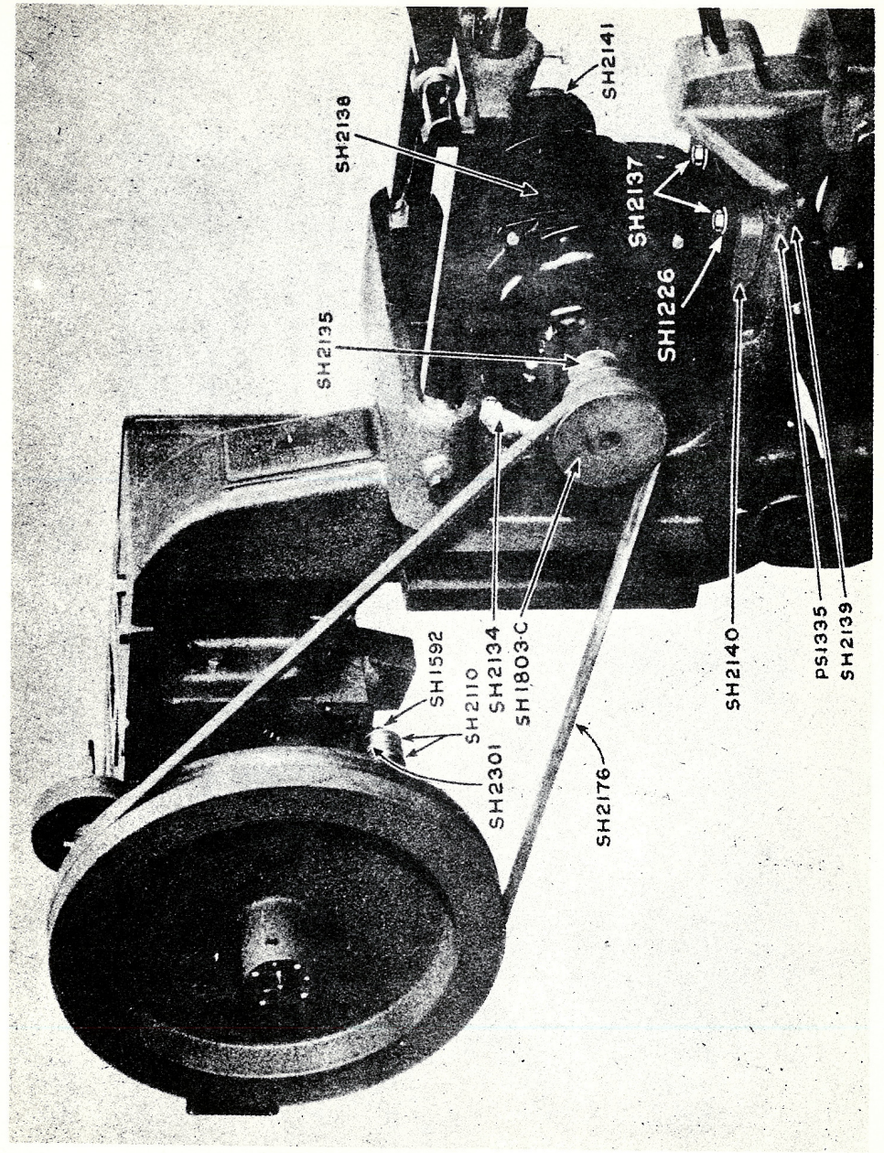

MOTIOGRAPH MODEL "MK" MIRROPHONIC SOUND REPRODUCER MOTOR AND FLYWHEEL

Printed in U.S.A.

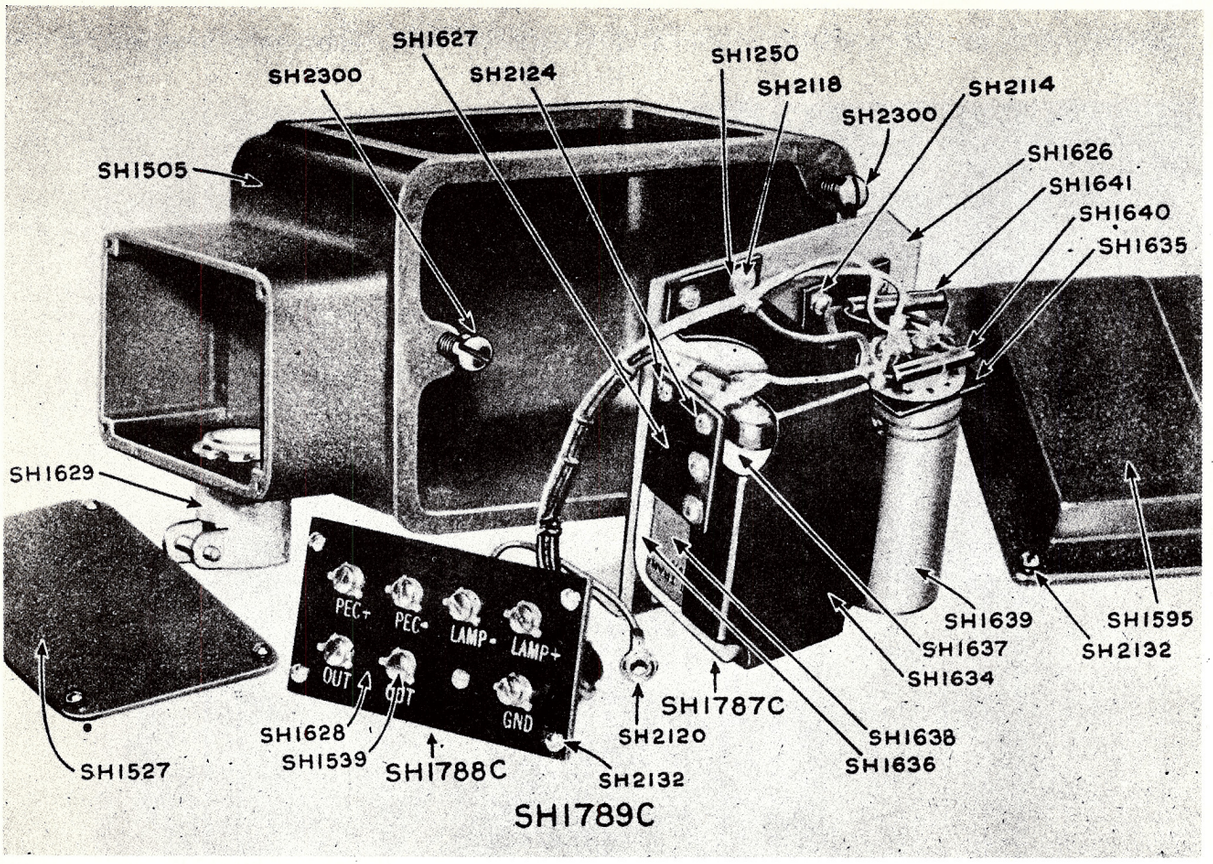

MOTIOGRAPH MODEL "MK" MIRROPHONIC SOUND REPRODUCER COUPLING UNIT

PART NO.	DESCRIPTION	ILLUSTRATION PAGE NO.
SH-1104	Door Latch	2
SH-1105	Door Latch Spring	2
SH-1106	Door Hinging Screw	2
SH-1117	Vertical Adjusting Screw for Exciter Lamp Bracket	1 - 2
SH-1120	Dowel Pin for Lens Mounting Bracket	2
SH-1123	Exciter Lamp Socket (see SH-1702-C)	*
SH-1124	Exciter Lamp Socket Contact (see SH-1702-C)	*
SH-1125	Exciter Lamp Socket Bushing (counter-bored) (see SH-1702-C)	*
SH-1126	Exciter Lamp Socket Bushing (plain) (see SH-1702-C)	*
SH-1127	Exciter Lamp Bracket Coil Spring (see SH-1702-C)	*
SH-1128	Clip for Contact Plunger (see SH-1702-C)	*
SH-1132	Screw	3
SH-1135	Photo-Electric Cell	1
SH-1159	Handle Screw for Tension Pad	2
SH-1163	Guide Roller & Tension Pad Lever Screw	1 - 2
SH-1164	Nut for SH-1163 Screw	2 - 3
SH-1166	Lever for Film Guide Roller	2
SH-1169	Spring for Roller Lever	2
SH-1170	Lever Spring Stud	2 - 3
SH-1171	Washer for SH-1170 Stud	2
SH-1172	Screw to lock Washer	*
SH-1187	Set Screw for Fly-Wheel	4
SH-1188	Lock Screw for Set Screw	2 - 4
SH-1189	Main Shaft	1 - 2 - 3
SH-1190	Main Shaft Bearing (small)	3
SH-1191	Main Shaft Bearing (large)	3
SH-1194	Felt Retainer for Main Bearing (small) (see SH-1734-C)	*
SH-1195	Felt Retainer for Main Bearing (large) (see SH-1733-C)	*
SH-1196	Spacer for Bearings	3
SH-1197	Steel Hold-Back Drive Gear	3
SH-1198	Sound Sprocket	1 - 2
SH-1199	Taper Screw for Sound Sprocket	2
SH-1201	Hold-Back Sprocket Shaft	1 - 2 - 3
SH-1202	Bearing Bushing for Hold-Back Sprocket Shaft (large)	3
SH-1203	Bearing Bushing for Hold-Back Sprocket Shaft (small)	3
SH-1208	Gear Cover Plate	2
SH-1209	Screw to attach Cover Plate	2
SH-1215	Support Casting for Stripper Plate Details	2
SH-1216	Stripper Plate Post	2
SH-1217	Retaining Clamp	2
SH-1218	Guide Roller Shaft	1
SH-1219	Eccentric Stop Stud	2 - 3
SH-1224	Retaining Clamp for Spring Stud	2
SH-1226	Washer for Motor Mounting Screw	5
SH-1246	Screw to attach Felt Retainer to Main Frame Mounting Plate	*
SH-1247	Screw to attach Small Retainer to Main Frame Mounting Plate	
SH-1250	Terminal	6
SH-1251	Screw to secure Shaft in Film Guide Roller Lever	*
SH-1252	Screw for SH-1224 Clamp	*
SH-1253	Screw to clamp Eccentric Stop Stud	2 - 3
SH-1257	Ruby Glass for Exciter Lamp Door	2
SH-1265	Wrench for SH-1187 Set Screw	*
SH-1314	Cap for SH-2107 Nipple	3 - 4
SH-1316	Exciter Lamp Bracket (upper member)	1 - 2
SH-1317	Stripper Plate	2
SH-1320	Vertical Shaft for Exciter Lamp Bracket	2
SH-1321	Guide Shaft for Exciter Lamp Bracket	2
SH-1322	Thumb Screw for locking Exciter Lamp Horizontal Adjustment	2
SH-1324	Leaf Spring for Vertical Adjusting Screw	2
SH-1325	Screw to attach Leaf Spring	*
SH-1326	Clamping Screw for Exciter Lamp Socket	2
SH-1332	Screw to clamp SH-1612 Exciter Lamp Shield Support Band	2
SH-1337	Lock Washer	*
SH-1345	Shaft for SH-1742-C Gear	2 - 4
SH-1351	Exciter Lamp Bracket (lower member)	2 - 1
SH-1371	Oil Cup for Sound Support	3 - 4
SH-1395	Sound Reproducer Main Frame Mounting Plate	3
SH-1399	Contact Spring for Exciter Lamp	2
SH-1410	Dowel Pin for Aperture Cylinder	1
SH-1420	Shaft for SH-1741-C Gear & Sprocket	4
SH-1421	Special Nut for SH-1345 Shaft	4
SH-1423	Mechanism Drive Chain	4
SH-1424	Screw to attach SH-1491 Bracket to Sound Reproducer	*
SH-1425	Washer for SH-1424 Screw	*
SH-1428	Twenty-Two Tooth Sprocket for Mechanism Drive	4
SH-1432	Round Take-Up Belt (for Simplex Projector)	*
SH-1433	Screw to attach SH-1428 Sprocket to Flywheel	*
SH-1436	Screw to attach SH-1420 Shaft to SH-1491 Bracket	2 - 4
SH-1437	Screw to attach Guard to SH-1491 Bracket	*
SH-1438	Belt Clip	*
SH-1439	Washer for SH-1437 Screw	*
SH-1452	Set Screw for SH-1420 Shaft (same as SH-1436)	*
SH-1466	Coil Spring for Exciter Lamp Bracket	2
SH-1470	Bracket for Take-Up Belt Idler	4
SH-1471	Door Knob	2
SH-1487	Sound Reproducer Housing	2
SH-1488	Door (Small)	2
SH-1489	Door (Large)	2
SH-1491	Gear Bracket	2 - 4
SH-1492	Gear Guard for SH-1491 Bracket	4
SH-1505	Coupling Unit Housing	6
SH-1513	Rubber Bushing for SH-1622 Mounting Plate	2
SH-1515	Shoulder Screw for SH-1622 Mounting Plate	2
SH-1527	Terminal Cover Plate for Coupling Unit Housing	6
SH-1539	Terminal Screw	6
SH-1559	Film Tension Shoe	1 - 2
SH-1560	Tension Plate for SH-1559 Tension Shoe	1 - 2
SH-1561	Shoulder Screw for SH-1559 Tension Shoe	2
SH-1562	Coil Spring for Shoulder Screw	2
SH-1566	Hexagon Head Set Screw	2
SH-1568	Photo-Electric Cell Lead (2 conductor)	*
SH-1571	Sound Sprocket Tension Shoe Lever for SH-1560 Tension Plate	1 - 2
SH-1592	Idler Roller Shaft	4 - 5
SH-1595	Cover for SH-1505 Housing	6
SH-1596	Film Roller Tension Shoe Lever	1 - 2
SH-1597	Shaft for Film Guide Roller (large)	1 - 2
SH-1598	Bushing for SH-1597 Shaft	2
SH-1599	Collar for SH-1597 Shaft	1 - 2
SH-1600	Bracket for mounting SH-1623 Lens Assembly	1 - 2
SH-1601	Shield for Photo-Electric Cell	2
SH-1602	Aperture Cylinder	2
SH-1603	Sponge Rubber for SH-1601 Shield	1
SH-1604	Gasket for SH-1608 Socket	*
SH-1605	Insulating Washer for SH-1607 Shield	*
SH-1606	Insulating Strip for SH-1607 Shield	*
SH-1607	Shield for SH-1608 Socket	*
SH-1608	Socket (4 prong)	1
SH-1609	Plate for SH-1608 Socket	*
SH-1610	Lock Spring for SH-1608 Socket	*
SH-1611	Exciter Lamp Shield	1 - 2
SH-1612	Band for Shield (see SH-1790-C)	*
SH-1613	Guide Pin for SH-1612 Band (see SH-1790-C)	*

*Not Illustrated

Issued by
Engineering Department
Printed in U.S.A.

5350.20

PART NO.	DESCRIPTION	ILLUSTRATION PAGE NO.
SH-1614	Insulating Block	2
SH-1615	Slide Pin for Insulating Block	2
SH-1616	Slide Rod for Insulating Block (short)	2
SH-1617	Slide Rod for Insulating Block (long)	2
SH-1618	Flywheel for V-Belt Drive	4
SH-1619	Location Lock Pin for SH-1601	2
SH-1620	Film Guide Roller (large)	1 - 2
SH-1621	Shaft for SH-1596 Film Roller Tension Shoe Lever	1 - 2
SH-1622	Cushioned Mounting Plate	2
SH-1623	Lens Assembly	1
SH-1624	Exciter Lamp	*
SH-1626	Mounting Plate for SH-1787-C Coupling Unit	6
SH-1627	Terminal Strip for SH-1638 Transformer	6
SH-1628	Terminal Strip for Coupling Unit	6
SH-1629	3/4" Greenfield Connector	6
SH-1632	Hold-Back Sprocket	1 - 2
SH-1634	Mounting Shield for Transformer	6
SH-1635	Bracket for Condenser	6
SH-1636	Felt Transformer Cushion (narrow)	6
SH-1637	Felt Transformer Cushion (wide)	6
SH-1638	Output Transformer	6
SH-1639	Condenser	6
SH-1640	Resistor	6
SH-1641	Resistor	6
SH-1642	Lead (Yellow) for SH-1787-C Coupling Unit	*
SH-1643	Lead (Brown) for SH-1787-C Coupling Unit	*
SH-1645	Washer for SH-1788-C Terminal Strip	*
SH-1647	Cable Clamp for Coupling Unit Cable Form	*
SH-1648	Clamp for SH-1170 Stud	*
SH-1649	Clamp to attach SH-1602 Aperture Cylinder	*
	<u>Assembled Units</u>	
SH-1702-C	Exciter Lamp Socket & Bushings	2
SH-1705-C	Bakelite Hold-Back Sprocket, Driven Gear & Hub	2
SH-1706-C	Film Guide Roller Lever & Shaft	2
SH-1711-C	Stripper Plate & Mounting	1
SH-1733-C	Felt Retainer (small) for Main Shaft	3
SH-1734-C	Felt Retainer (Large) for Main Shaft	3
SH-1736-C	Stripper Plate & Shaft	*
SH-1742-C	Forty-Tooth Bakelite Gear & Seventeen-Tooth Pinion	2 - 4
SH-1749-C	Forty-Tooth Steel Gear & Seventeen-Tooth Chain Sprocket	2 - 4
SH-1763-C	Mechanism Drive Assembly (complete)	4
SH-1765-C	Sound Reproducer Housing & Doors	*
SH-1781-C	Tension Shoe & Lever for Take-Up Sprocket	1
SH-1782-C	Sound Reproducer Main Frame Mounting Plate	*
SH-1787-C	Coupling Unit	6
SH-1788-C	Coupling Unit Terminal Strip (Complete)	6
SH-1789-C	Coupling Unit (Complete)	6
SH-1790-C	Exciter Lamp Shield Band & Guide Pin	1 - 2
SH-1791-C	Cushioned Mounting Plate (Complete)	*
SH-1792-C	Tension Shoe & Lever for Film Guide Roller (large) (complete)	1
SH-1793-C	Aperture Cylinder & Pin	1
SH-1794-C	Exciter Lamp Insulated Mounting (complete)	2
SH-1795-C	Flywheel with Twenty-Two Tooth Sprocket	2 - 4
SH-1797-C	Transformer Terminal Strip (complete)	*
SH-1801-C	Exciter Lamp Bracket (complete)	2
SH-1803-C	Adjustable Pulley	5
SH-2100	Stop Screw for Exciter Lamp Bracket	2
SH-2101	Screw to attach SH-1217 Clamp	2
SH-2102	Glass for Door	2
SH-2103	Retaining Clip for Door Glass	2
SH-2104	Lock Screw	*
SH-2105	Set Screw	2
SH-2106	Screw	*
SH-2107	Nipple for SH-1395 Mounting Plate	3 - 4
SH-2108	Cable Clamp for SH-2121 Exciter Lamp Armored Cable	3
SH-2109	Screw for Door Glass Retaining Clip	2
SH-2110	Idler Roller	4 - 5
SH-2111	Brass Slug	2
SH-2112	Taper Plug for SH-1345 Shaft	2
SH-2113	Screw	2
SH-2114	Lock Washer	6
SH-2115	Set Screw	2
SH-2116	Rivet Pin for Model Plate	*
SH-2117	Screw	*
SH-2118	Screw	2 - 6
SH-2119	Screw	*
SH-2120	Terminal for Ground Lead	6
SH-2121	Armored Exciter Lamp Cable	3
SH-2122	Hexagon Nut	2
SH-2123	Handle for Door	2
SH-2124	Screw	6
SH-2125	Model Plate	*
SH-2126	Screw for SH-1216 Stripper Plate Post	*
SH-2127	Screw	*
SH-2128	Guide Roller	1 - 2
SH-2129	Spacer for SH-2128 Roller	2
SH-2130	Screw	2
SH-2131	Hexagonal Nut	*
SH-2132	Screw	6
SH-2133	Greenfield Connector (straight)	*
SH-2134	Greenfield Connector (90 degree)	5
SH-2135	Hollow Head Set Screw	5
SH-2136	Washer for SH-2139 Screw	*
SH-2137	Hexagon Head Screw	5
SH-2138	Sound Reproducer Motor	5
SH-2139	Screw to attach Motor to Main Frame	5
SH-2140	Motor Mounting Plate	5
SH-2141	Hand Wheel for Motor	5
SH-2176	Drive Belt	2 - 4 - 5
SH-2300	Main Frame Mounting Screw	3 - 6
SH-2301	Idler Roller Spacer Washer	3 - 5
SH-2302	Oil Cup	4
SH-2303	Drive Shaft Washer	4

*Not Illustrated

Issued by
Engineering Department
Printed in U.S.A.

1. DESCRIPTION

1.1 The Reproducer is finished externally in wrinkle gray and internally in white enamel, having the exciter lamp compartment at the rear and film compartment at the front, with facilities for attaching a SH-2544 Bracket on the drive side. Dimensions 8-3/4" H X 10" D X 15-1/2" W. Weight 96 lbs.

2. INSTALLATION - ("Item" numbers refer to numbers on associated Stock List, WE-7522, and Assembly Drawing WE-7521.)

2.1 Pedestals - (Sound Head Support Brackets). (Order from pedestal manufacturer except where noted.)

2.11 Motiograph HU - Mount reproducer directly on pedestal.
2.12 Motiograph K and S - PS-1475 Bracket
2.13 Motiograph H - Replace PS-600 support casting by PS-2011-C
2.14 Simplex type 3 and 5 point (new) - Simplex A-169-L Pedestal Arm. (Motiograph will supply support arms, on request, for existing common Simplex type 3 & 5 point pedestals)
2.15 Simplex type M and R - Simplex A-170-L Pedestal Arm
2.16 Super-Simplex type and Simplex SI type - S-1184-L Sound Head Support.
2.17 Brenkert BX-12 - BX-2187 Bracket
2.18 Brenkert BX-10 - BX-2185 Bracket
2.19 Century L, C-D, Imp. 5 Point, and Deluxe - Century S-6184-L Sound Head Support
2.20 Ballantyne "Soundmaster" - Ballantyne S-303 Bracket

2.2 Takeup Assembly

2.21 Simplex - Use SH-2669 Takeup Drive Pulley and SH-2727 Spring as replacements for original corresponding items. With W-29 or W-30 Takeups use takeup pulley ASL-13817.

2.22 Motiograph - Replace TU-707 Assembly with TU-716 (Item 160) (TU-725 - Available 1945)

3. GENERAL - Applies to all types of projectors except where noted.

3.1 SH-2670 Adapter Plate (Item 116) - Remove from the top of the reproducer, and remove the shipping guard from the stabilizer shaft; save screws and washers for mounting motor bracket. Return shipping guards to Motiograph, Inc. for credit.

3.11 With Motiograph Projectors, (except AA), fasten the CS-1448 Mechanism Plate (Item 163), supplied with mechanisms or reproducers, to the SH-2670 Adapter Plate (Item 116) with the Item 161 screws. Before tightening screws firmly, place the assembly on reproducer and align screw holes in mechanism plate and reproducer. Remove the assembly and tighten screws (Item 161), securely. Replace the assembly on the reproducer and insert three of the Item 97 fastening screws through the accessible adapter plate mounting holes. Tighten screws firmly.

3.12 With Simplex type Projectors (includes Motiograph AA), fasten the SH-2670 Adapter Plate (Item 116), to the Simplex Mechanism with the SH-2680 Oil Shield (Item 117), between, using the original mechanism mounting screws. Locate the mechanism base squarely against the shoulder of the adapter plate, and with a distance of 3-7/8" (4-1/4" for Super-Simplex) from the operating side of the mechanism base to the operating side of the adapter plate. It is important that this dimension be correct to insure proper alignment in the film path.

3.2 SH-7030 Mechanism Drive Sprocket Assembly (Item 144) - Insert in the mechanism. Thread the oil cup into the end of the shaft from the operating side of the mechanism, turning the shaft with a screw driver. Rotate the shaft until its flat is in alignment with the locking screw in the mechanism bearing. Tighten the screw firmly after pushing the shaft inward to its seat. Turn the oil cup to an upright position. Drill out the shaft hole if required in older mechanisms. A few SH-7028 Mechanism Drive Sprocket Assemblies have been supplied to the field in place of the SH-7030 Assemblies for stock reasons. They are identical except that the shaft is Part No. SH-2681 and the drive pinion is Part No. SH-2684. They may be identified from the spiral oil grooves in the shafts; SH-7030 Assemblies have a single straight oil groove.

3.21 With Motiograph Model HK Projector it is only necessary to replace the existing drive chain sprocket on the mechanism shaft with the new Item 152 Sprocket.

3.3 Install the SH-2532 Drive Chain Sprocket (Item 111) on the reproducer shaft just below the takeup belt pulley if it is not already mounted. Place the projector mechanism and attached adapter plate on the reproducer set so that the adapter plate drops into the machined guide. Slide the mechanism forward so that the SH-2543 Drive chain (Item 113) can be placed over and around upper and lower chain sprockets. Slide the mechanism back to its proper position, aligning the screw holes in the adapter plate with those in the reproducer set. Tighten the mounting screws. Align drive chain sprocket on its shaft with mechanism chain sprocket using a straight edge; tighten the lower sprocket set screw securely.

Issued by
Engineering Department
Printed in U. S. A.

3.31 With Motiograph Model HK Projector, use SH-7038 Projector Drive, Gear and Sprocket Assembly (Item 147) and SH-2698 Projector Drive Chain (Item 153). Install the SH-7039 Bakelite Idler Gear Assembly (Item 148) on the reproducer shaft just below the takeup belt pulley. Make certain that the Item 16 Woodruff key is in place, and that Item 158 Allen set screw clears shaft flat. Do not tighten set screw until gears are aligned. Assemble Item 150 bracket, Item 151 shaft, and Item 147 drive gear and chain sprocket. Use Allen set screw Item 159, to lock shaft, and screw CS-1154 Oil Cup into shaft oil hole. Fasten the Assembly to the reproducer wall with screws and washer, Items 154 and 157. Carefully align Item 148 gear and the drive gear of Item 147. Turn the reproducer over by hand to make certain the gears do not bind at any point and that teeth are properly engaged. Tighten the bracket mounting screws and the idler gear set screw firmly.

3.32 Model K Motiograph Mechanisms are provided with an adjustment to raise or lower the drive gear train assembly so as to provide correct mesh with drive gears of certain older types of sound reproducers. When Model K Mechanisms are used with SH-7500 Reproducers this adjustment should be at approximately the middle of its travel in order to allow sufficient slack in the silent link chain connecting the reproducer and the projector mechanism. If the adjustment is at the upper end of its travel it will be found that there is no slack in the chain when the mechanism is placed in its normal position. The slack should be such as to permit adjustment of the SH-7015 Drive Chain Idler Bracket Assembly (Item 129) to a point where the drive chain runs smoothly without whipping, and the bakelite idler roller contacts the chain with just sufficient force to insure rotation of the roller. The drive gear train assembly adjustment consists of two screws set into the base casting just below the left rear half door. Screw nearest the mechanism center frame is tapped into the base casting and pushes down against the gear train casting. The large headed screw next to it is a clearance fit in the base casting, but is tapped into the gear train casting. Thus by tightening one screw and loosening the other, the gear train casting can be raised or lowered as desired. With both screws tight the casting is rigidly locked and of course must be so for normal operation of the projector mechanism.

3.4 Mount the SH-7015 Drive Chain Idler Bracket Assembly (Item 129) on the reproducer set and set it temporarily for minimum chain tension.

3.41 On Motiograph Model HK Projector use SH-7040 Assembly (Item 174).

3.5 Mount the lower magazine to the frame of the reproducer set, using the SH-2693 Mounting Screws (Item 99) supplied with the reproducer. Install the SH-7017 Oil Pan Assembly (Item 92) between the magazine and the reproducer.

3.6 Install the SH-7014 Takeup Belt Idler Assembly (Item 128) on the reproducer set, using Item 97 screws. Locate bracket at extreme position toward pedestal point.

3.7 Install the SH-2674 Takeup Belt (Item 115). Shorten belt as required. After installation, adjust idler assembly (Item 128) to give sufficient tension for positive drive of the takeup assembly.

3.8 Motor SH-2673 is shipped completely assembled to the motor bracket assembly. Before mounting the motor bracket to the reproducer frame, slip Motor Coupling SH-2522 on the motor shaft. Mount motor bracket to reproducer frame, using screws and washers, Items 100 and 101, at the same time slipping motor coupling over the drive shaft of the reproducer. Make certain that the bracket is square against the frame. With the motor bracket in its proper position, there should be free movement of the motor coupling over both shafts. With proper alignment, securely tighten both motor coupling set screws against flats on both shafts. Two bracket mounting screw holes have been slotted and the center hole has been tapped to permit the bracket to be installed or removed without disturbing the stabilizer assembly. Rotation CCW viewed from dead end.

3.9 Install stabilizer as follows:

(a) On operating side remove SH-7004 Mirror Assembly (Item 33).
(b) Loosen Impedance Drum Assembly Retaining Clip (Item 26), and swing 90 degrees and retighten.
(c) Lift Impedance Roller Assembly (Item 32) and withdraw Impedance Drum Assembly (Item 38) approximately 2 inches from normal position.
(d) Insert impedance drum assembly shaft into stabilizer, advancing impedance drum assembly into its normal position.
(e) Lock stabilizer on shaft with Item 43 nut.
(f) Restore impedance drum assembly retaining clip and lens mirror assembly to their normal position.

3.91 To remove stabilizer, reverse the above procedure. The stabilizer may also be installed or removed by removing the motor from its cradle; in this way neither the stabilizer shaft nor the motor bracket alignment is disturbed. Loosen motor coupling set screws and loosen and remove the clamps holding the motor in its cradle. In replacing motor in the cradle, tighten the clamps to their maximum tightness.

4. ADJUSTMENTS

4.1 The SH-7005 and SH-7006 Pad Roller Assemblies can be adjusted for lateral alignment with the sprocket by means of the knurled nuts on their pivot shafts after loosening the locking screws in the center of the nuts. The adjustment should be such that the flanges of the pad rollers clear the sprocket faces.

For proper film clearance adjust by first loosening the two main mounting screws which secure the pad rollers to the wall of the reproducer. Then loosen one of the screws along side the adjusting stud, which is found to the left of the pad roller assembly, and tighten the other. When proper clearance of two thicknesses of film has been obtained, tighten the main mounting screws firmly.

4.2 Check the path of the light beam from the lens tube Item 41, through the lens and mirror assembly Item 33, and the collector lens assembly mounted on the P.E.C. Bracket, making sure that the image of the slit is centered within the collector lens. To center the light beam on the collector lens, loosen the two screws holding the mirror insert in lens and mirror assembly Item 33, and rotate mirror insert for proper position and retighten screws. The image of the slit is focused on the collector lens by slightly loosening the two mounting screws (Item 68), fastening the lens and mirror assembly Item 33, and sliding the assembly toward or away from the film. When properly positioned, retighten screws Item 68. The collector lens assembly should be adjusted so that the light beam falls on the cathode of the photoelectric cell without interference from the anode. Adjust the front P.E.C. Bracket mounting screws so that the light beam from the lens tube just clears the edge of the impedance drum film carrying roller.

4.3 Adjust the lens tube assembly for maximum response with a 7000 or 8000 cycle film.

5. LUBRICATION

5.1 Shaft bearings in the SH-7500 Reproducer are ball bearing type requiring no additional lubrication during the life of the bearing.

5.2 Daily, or before each period of operation, apply one drop of mechanism oil to the following points:

(a) Oil holes in pad rollers on SH-7027 Sound Sprocket.
(b) Sides of projector mechanism drive chain idler roller.
(c) Sides of takeup belt idler pulleys.

5.3 Once per week of normal operation:

(a) Fill the two oil tubes which lubricate the reproducer drive gears.
(b) Apply a few drops of oil to the projector mechanism drive chain.
(c) Apply one drop of oil to the oil holes in the bracket arm of the impedance roller assembly (Item 32), the oil holes in the two pad roller bracket arms, and the oil hole in the SH-7013 Idler Roller Assembly (Item 59). The idler roller assembly is equipped with an Oilite bushing requiring only infrequent lubrication.

5.4 Once each six to eight months of normal operation, oil the motor bearings with a good grade of light automobile oil. Take care that only enough oil is supplied to saturate the wool packing in the bearings. Excessive oiling will cause rapid deterioration of the rubber cushion supports and of the starting switch inside the motor.

6.

6. CLEANING

6.1 Great care must be exercised in cleaning the mirrors in the lens and mirror assembly. The rhodium plating may be damaged by the use of such solvents, as acetone, alcohol, carbon tetrachloride, etc. For regular cleaning, it is best that a soft lens paper be used, being careful that no sharp implement is used that may scratch the surface of the mirror. If considerable oil gathers in the lens, it is suggested that the whole assembly be removed and immersed in gasoline, then thoroughly wiped off with a soft cloth, and the mirror polished with lens paper.

7. PUSH-PULL MODIFICATIONS

7.1 Equipment Changes:

7.11 The SH-2572 Lens is omitted from the SH-7018 Collector Lens Assembly, thus permitting the light from the reproducer optical system to reach the photocell as a long narrow line instead of a round spot.

7.12 The SH-2725 Photocell is replaced with an RCA #920 or Cetron #CE-21 Twin Element Photocell. A clamping device is provided on the photocell socket to hold the cell rigidly in alignment with the reproducer optical system.

7.13 The terminal strip is replaced by an assembly containing, in addition to the usual terminals for exterior cable connections, a network of condensers and resistors for coupling and balancing purposes, a potentiometer for balancing the outputs from the two halves of the push-pull coupling circuit, and a switch to change from single track ("standard") to "push-pull" reproduction.

7.14 Due to the somewhat lower sensitivity of the twin-element photocells as compared with standard cells, and because of losses in the coupling network, the output level of the modified reproducers is lower than that from standard ones. When the reproducers are used with TA-7466-A and TA-7467-A Amplifiers, this is compensated by increasing the photocell polarizing voltage by replacing R-14 and R-17 100,000

ohm resistors in the TA-7466-A Amplifier with 50,000 ohm resistors. This change will already have been made where modified reproducers and amplifiers are shipped together as part of a complete sound system. The voltage to ground at the reproducer "90 V." terminal should be approximately 100 volts, as measured with a 20,000 ohm/volt meter, 1000 volt scale,

7.2 Adjustments

7.21 The longitudinal position of the SH-7004 Lens Mirror Assembly and the reflection angle are adjusted so that the light beam is focussed as a narrow line approximately centered across the two cathodes of the twin photocell. The SH-7018 Collector Lens Assembly, which now serves only as a shield for the light beam, is adjusted so that the beam passes through it without interference.

7.22 With push-pull film running through the machine the angular position of the SH-7002 P.E.C. Bracket, and the lateral position of the SH-7003 Impedance Roller Assembly should be adjusted so that the light beam from the lens tube is exactly centered on the push-pull sound track, with the track just clearing the edge of the impedance drum. This may be observed by looking at the film from the front as it passes over the impedance drum assembly. If the angular position of the bracket is changed appreciably, the adjustments in 7.21 of this section should be rechecked.

7.3 Balancing - There are two methods for adjusting the push-pull optics and circuit for proper balance. Both require a section of film, or film loop, having recorded on it a single frequency of constant amplitude not higher than 3 KC (1 KC is preferred), and an output meter connected to the amplifier.

7.31

7.31 The first method uses standard film (not push-pull), and presupposes that the distance from the sound track edge of this film to the center of its sound track is exactly the same as the corresponding dimension of the push-pull films to be run. Experience indicates that this unfortunately is not always the case, so before using this method, representative push-pull films from those to be run, should be checked against the standard frequency film being used for balancing purposes.

7.31

7.311 Set the potentiometer on the side of the terminal strip assembly to the middle of its travel.

7.312 With the standard frequency films running through the reproducer, and with the terminal strip switch in the "P-P" position, adjust the position of the light beam falling on the photocell cathodes by turning the mirror plug in the outside end of the SH-7004 Lens Mirror Assembly slightly one way or the other until minimum response is obtained. Lock the plug in this position with its fastening screws, and recheck the adjustment of the SH-7018 Collector Lens Assembly to see that there is no interference with the light path. Exact balance (maximum cancellation from standard frequency film) is then obtained by adjusting the potentiometer for lowest response. It should be possible to obtain 18 - 20 db. cancellation in this manner.

7.32 The second method consists simply of using a push-pull frequency film recording. The terminal strip switch is set to the "P - P" position, and adjustments are made in exactly the same manner as for the first method except that correct adjustments are indicated by maximum output meter readings. The peak will not be as well defined as the dip obtained in the first method, but alignment difficulties are reduced since all push-pull films from the same recorders and printers are likely to have about the same track dimensions and locations. A variation of this method is to set the switch to "STD" position and adjust for minimum output; it is doubtful, however, that this will result in very accurate push-pull balance, for circuit conditions and photocell characteristics are different in the two switch positions.

7.4 The high frequency response of the modified reproducers is several db less than that of standard ones due to the effects of shunt capacities in wiring, switches and photocell leads. Reproducer correction factors given in system installation notes for transmission tests will therefore be inadequate at 7 & 8 KC.

8. REPLACEMENT PARTS - (Refer to WE-7521, WE-7522, WE-7506, WE-7507, WE-7529, RSH-7003)

8.1 Reproducers manufactured prior to about the middle of 1942 had a small brass flywheel or balance wheel on the motor drive shaft. With the adoption of the present molded rubber couplings it is no longer necessary. Its place on the shaft is taken up by replacing the short SH-2518 shaft spacer with a longer one carrying the part number SH-2758.

ASSOCIATED DRAWINGS

WE-7507	Film Threading Diagram
WE-7521	Assembly
WE-7522	Parts List
WE-7553	Drive Side Assembly with Model K & Simplex Type Projector Mechanism
WE-7550	Drive Side Assembly with Model HK Projector Mechanism
RSH-7003	Impedance Roller Assembly
WE-7554	Push-Pull Modifications Schematic & Wiring Diagrams
WE-7529	PEC Bracket Assembly

Issued by
Engineering Department
Printed in U. S. A.

ASSOCIATED DRAWING WE-7521

Item	Part No.	Name
1	SH-2500	Main Frame Casting
2	SH-2501	Sound Sprocket Retaining Screw
3	SH-7027	Sound Sprocket & Pin Assembly
4	SH-2504	Sound Sprocket Shaft Spacer
5	SH-2507	Sound Sprocket Bearing Cover Plate
6	SH-2549	New Departure #87502-Z Ball Bearing
7	SH-2505	Sound Sprocket Equalizing Spacer
8	SH-7000	Sound Sprocket Gear Assembly
9	SH-2506	Sound Sprocket Collar
10	SH-2550	New Departure #487502-Z Ball Bearing
11	SH-2508	Ball Bearing Retaining Ring
12	SH-2677	Sprocket Shim Spacer
13	SH-2551	New Departure W-02 Lock Washer
14	SH-2552	New Departure N-02 Lock Nut
15	SH-2510	Sound Sprocket Shaft
16	SH-2667	#404 Woodruff Key
17	SH-2511	Chain Sprocket Shaft Bearing Cap
18	SH-2512	Chain Sprocket Shaft Spacer
19	**SH-7047	Chain Sprocket Drive Gear (Old style - SH-7001)
20	SH-2514	Chain Sprocket Drive Shaft Collar
21	SH-2531	Nameplate (Decalcomania located on glass in door)
22	SH-2515	Chain Sprocket Drive Shaft
23		
24	SH-2516	Drive Pinion
25	SH-2517	Framing Knob
26	SH-2523	Impedance Drum Retaining Clip
27	**SH-2765	Motor Drive Shaft Pinion (Old style - SH-2555)
28	SH-2758	Motor Drive Shaft Spacer
29	SH-2519	Motor Drive Shaft
30	SH-2520	Motor Drive Shaft Bearing Retaining Ring
31	#SH-7002	P.E.C. Bracket Assembly
32	SH-7003	Impedance Roller Assembly
33	***SH-7004	Lens Mirror Assembly
34	*SH-7005	Pad Roller Assembly (top)
35	*SH-7006	Pad Roller Assembly (bottom)
36	SH-7007	Sound Sprocket Gear Oiling Tube Assembly
37	SH-7012	Terminal Strip Assembly
38	SH-7009	Impedance Drum Assembly
39	SH-2524	Stabilizer Shaft Spacer
40	SH-2525	Stabilizer Shaft Collar
41	SH-2526	Reproducer Lens Tube
42		
43	SH-2527	Stabilizer Retaining Nut
44	SH-7010	Film Compartment Door Assembly
45	SH-7011	P.E.C. Compartment Door Assembly
46	SH-2632	Film Compartment Door Window
47	SH-2636	Door Knob
48	SH-2634	Door Hinge
49		
50	SH-2530	Vent Cap for Exciter Lamp Compartment
51	SH-2696	#2 Woodruff Key
52	SH-7008	Chain Sprocket Gear Oiling Tube Assembly
53	SH-2635	Door Flush Strike
54	SH-2668	Door Catch
55	SH-2533	P.E.C. Bracket Cork Washer
56	SH-2534	P.E.C. Bracket Steel Washer
57	SH-2535	Stripper Stud
58	SH-2536	Single Blade Stripper
59	SH-7013	Idler Roller Assembly
60	SH-2537	Idler Roller Shaft
61	SH-2538	Double Blade Stripper
62		6-32 x 3/16" R.H.I.M.S., N.P. (For door glass)
63		6-32 x 1/4" F.H.I.M.S., N.P. (Hinge screws)
64		
65		6-32 x 1/4" R.H.I.M.S., N.P. (Door catch screw)
66		6-32 x 3/8" F.H.I.M.S., N.P. (Used with 11, 17, 30, 5, 87, & 53)
67		
68		8-32 x 5/8" F.H.I.M.S., N.P. (Used with 34, 35, 61, 81, 82, & 33)
69	SH-2731	1/4"-20 L.H.Thd. x 5/16" F.H.I.M.S., N.P. (Used with 59 & 73)

Item	Part No.	Name
70	SH-2732	1/4"-32 L.H.Thd. x 3/4" F.H.I.M.S., N.P. (Used with 25)
71		3/8"-16 Std. Hex. Iron Nut (Used with 60)
72		#8 Std. St. Washer, N.P. (Used with 33)
73		1/4" Std. St. Washer, N.P. (Used with 59)
74	SH-2633	Film Compartment Door Window Retaining Clip
75		#1206 Shakeproof Lockwasher (Used with 11, 17, 30, 53, 54, & 87)
76		#1208 Shakeproof Lockwasher (Used with 47)
77		#1214 Shakeproof Lockwasher (Used with 25)
78		#1210 Shakeproof Lockwasher (Used with 37, 58, & 26)
79		10-32 x 3/8" R.H.I.M.S., N.P. (Used with 37, 58, & 26)
80		
81	SH-2540	Oil Tube Double Clamp
82	SH-2541	Oil Tube Single Clamp
83		#8 Std. St. Lockwasher (Used with 81, 82, & 68)
84	SH-2542	P.E.C. Adjusting Stud (Used with 31)
85		1/4"-20 Std. Hex. Iron Nut, N.P. (Used with 31)
86		1/4" Std. St. Lockwasher (Used with 31)
87	SH-2635	Door Flush Strike
88		10-24 x 15/16" O.H.I.M.S., N.P. (Used with 31)
89		10-24 x 1-5/16" O.H.I.M.S., N.P. (Used with 31)
90	SH-7016	Rotary Stabilizer Assembly
91	SH-2522	Motor Coupling
92	SH-7017	Oil Pan Assembly
93	PS-1460	3/8"-16 x 1-1/4" Hex. Hd. Screw N.P. (Sound Head Mtg. Screw)
94		3/8" Std. St. Washer, N.P.
95	PS-1461	5/16"-18 x 1-1/4" Hex. Hd. St. Cap Screw, N.P. (Sound Head Mtg. Screw)
96		5/16" Std. St. Washer, N.P. (Used with 99, 116, & 120)
97		5/16"-18 x 3/4" F.H.St. Screw (Used with 116, & 128)
98		#1218 Shakeproof Lockwasher (Used with 120)
99	SH-2693	Lower Mag. Mtg. Screw, 5/16" x 1" F.H.I.M.S., N.P. (Undercut)
100		7/16"-14 x 1" Hex. Hd. Motor Bracket Mtg. Screw, N.P.
101		7/16" Std. Motor Bracket Mtg. Washer, N.P.
102		
103		1/4"-20 x 3/4" Hex. Hd. Cap Screw N.P., slotted (Used with 129, & 174)
104		
105		
106		
107		
108	SH-2509	Takeup Belt Drive Pulley
109		
110		
111	SH-2532	Drive Chain Sprocket
112		1/4"-20 x 5/16" Allen Cup Point Set Screw
113	**** SH-2543	Drive Chain for Model K and Simplex Projectors (110 Pitch)
114	SH-2669	Simplex Takeup Drive Pulley
115	SH-2674	Takeup Belt, 5/16" Dia., 3' long
116	SH-2670	Adapter Plate
117	SH-2680	Simplex Mechanism Oil Shield
118	SH-7032	Rear Guard Assembly, Model K and Simplex Projectors
119	SH-2544	Motor Bracket
120	SH-2545	Motor Adjusting Screw
121	SH-2546	Motor Adjusting Screw Spacer
122	SH-2547	Motor Adjusting Screw Nut
123		
124		5/16"-18 Std. Hex. Iron Nut, N.P. (Used with 119, 120, & 126)
125		
126		5/16"-18 x 1 1/4" Hex. Hd.I.M. Screw, N.P. (Used with 119 & 134)
127	SH-2618	Motor (50 cycle, 110 volt)
128	SH-7014	Takeup Belt Idler Assembly
129	SH-7015	Drive Chain Idler Assembly (Model K and Simplex Projectors)
130	SH-2694	Helical Pinion Assembly (Replaces Item 27 for 50 cycle operation)
131	SH-2695	Gear (Replaces Item 19 for 50 cycle operation)
132	SH-2725	Photo-Electric-Cell
133	SH-2671	Exciter Lamp, 9 volt, 4 ampere, S.C.Bay.Pref. Base
134	SH-2673	Motor (60 cycle, 115 volt)
135	SH-2722	P.E.C. Bracket Countersunk Washer
136	SH-2675	Lens "B" Clamp Ring Extractor Tool (not shown on WE-7521)
137	SH-2755	Gasket for SH-2680
138		7/32" Dia. Steel Ball
139	SH-2605	Spring - for pad roller assembly
140	SH-2730	Pad Roller

Item	Part No.	Name
141	SH-2750	1/4-32 x 5/8" Tapered oval Filister Head Screw
142	SH-2589	Impedance roller tension spring
143		
144	SH-7030	Projector Mechanism Drive Assembly, Model K & Simplex Proj. a. Oil Cup, Simplex SH-2706 (Short) b. Oil Cup, Motiograph SH-2741 (Long) c. Locknut SH-2703 d. Drive Chain Sprocket SH-2678 e. Shaft SH-2688 f. Mech. Drive Pinion SH-2687
		Note: A few SH-7028 Mechanism Drive Sprocket Assemblies have been supplied to the field in place of the SH-7030 Assemblies for stock reasons. They are identical except that the shaft is Part No. SH-2681 and the drive pinion is Part No. SH-2684. They may be identified from the spiral oil grooves in the shafts; SH-7030 Assemblies have a single straight oil groove.
145		
146	SH-2727	Simplex Lower Magazine Friction Spring
147	SH-7038	HK Projector Drive, Gear and Sprocket Assembly
148	SH-7039	HK Projector Drive, Idler Gear Assembly
149	CS-1783-C	HK Mechanism Drive Shaft (CS-1701-C less CS-1102 Sprocket)
150	SH-2712	HK Projector Drive, Gear Bracket
151	SH-2713	HK Projector Drive, Gear & Sprocket Shaft
152	SH-2714	HK Projector Drive, Sprocket (used with 149)
153	SH-2698	HK Projector Drive, Chain (120 Pitch)
154		5/16-18 x 1" Hex. Hd. Cap Screw, N. P. (used with 150)
155		5/16-18 x 1/4" Allen Cup Point Set Screw (used with 152)
156	SH-2736	Motor Bracket Cover Plate
157		5/16 Std. Steel Washer, N.P. (used with 154)
158		1/4-20 x 1/4" Allen Cup Point Set Screw (used with 148)
159		1/4-20 x 3/8" Allen Cup Point Set Screw (used with 150)
160	TU-716 (TU-725 Avail. 1945)	SH-7500 Reproducer Takeup Assembly complete
161		3/8-16 x 3/4" Hex. Hd. Cap Screw, N.P. (used with 116)
162		5/16-18 x 1-1/2" Hex. Hd. Cap Screw, N.P. (used with 163)
163	CS-1445	Mechanism Adapter Plate, Motiograph K and HK
164		6/32 x 1/4" R.H.I.M.S., N.P. (for 156)
165	TU-476	Lock Nut
166	TU-480	Shaft
167	TU-477	Pulley and Hub
168	TU-718	Bushing Assembly
169	TU-467	Tension Adjusting Nut
170	TU-466	Tension Spring
171	TU-714	Gripping Ring and Disc Assembly
172	TU-468	End Thrust Ball Bearing
173	SH-7042	Rear Guard Assembly (HK only)
174	SH-7040	Drive Chain Idler Bracket Assembly (HK only)
175	PS-1461	5/16-18 x 1-1/4" Hex. Hd. Cap Screw, N.P. (used with 163)
176		#1-72 x 1/8" R.H. B.M.S. Nic. Pl.
177	SH-2602	Clip
178	SH-2596	Lens
179	SH-2598	Locknut Ring
180	SH-2597	Cork Gasket
181		1-72 x 1/8 Fil. H.B.M.S. N.P.
182	SH-2600	Clamp Plate
183	***SH-2599	Mirror (or ASP-8903)
184		#4 Brass Washer N.P.
185		4-36 x 1/4" Fil. H. B.M.S. N.P.
186	SH-2601	Mirror Holder
187	SH-2737	Spring
188	***SH-2603	Mirror (or ASP-8904)
Lens "B"	SH-7018	Collector Lens Assembly, consisting of: SH-2570 Lens Bracket SH-2571 Lens Retaining Ring SH-2572 Lens SH-2573 Lens Bracket Light Hood

Issued by
Engineering Department
Printed in U. S. A.

Notes: *SH-7005 and SH-7006 Pad Roller Assemblies consist of:
SH-2604 Arm Casting (for SH-7005 upper assembly)
SH-2613 Arm Casting (for SH-7006 lower assembly)
SH-7023 Pivot and Stud Assembly (for SH-7005 upper assembly)
SH-7025 Pivot and Stud Assembly (for SH-7006 lower assembly)
SH-2582 Adjusting Nut
SH-2605 Spring (detent)
SH-2730 Pad Roller
SH-2606 Pad Roller Shaft
7/32" Dia. Steel Ball Bearing (Detent Ball)
8-32 x 1/4" Allen Cup Point Set Screw (for SH-2606 Shafts)
8-32 x 5/8" Oval H.I.M.S. (Locking screw for SH-2582 Nut)

**Replace both drive gear and pinion as a "set" unless new type are in use. Part numbers are stamped on new type.

***Individual mirrors of the SH-7004 Lens Mirror Assembly may be replaced. Order as:
ASP-8903 Mirror (Exciter lamp end)
ASP-8904 Mirror (P.E.C. end)

(These are front surface mirrors and if used as a normal mirror, i.e., rear surface, efficiency is low. Check by viewing reflection of some object or light with mirror held at an angle. The correct reflecting surface is uppermost when ground glass edge cannot be seen).

**** A few reproducers, coded TA-7500, have been supplied to the field. These use ASP-8866 Chain.

#SH-7002 Photocell Bracket Assembly (Item 31) consisting of:
SH-2588 Exciter Lamp Socket
SH-2560 Exciter Lamp Socket Insulating Washer
SH-2562 Exciter Lamp Socket Insulating Bushing
SH-2723 Exciter Lamp Contact Stud
SH-2563 Exciter Lamp Connection Terminal
SH-2564 Photocell Socket
SH-2572 Lens (Lens B)
SH-2571 Lens Retaining Ring
SH-2573 Lens Bracket Light Hood

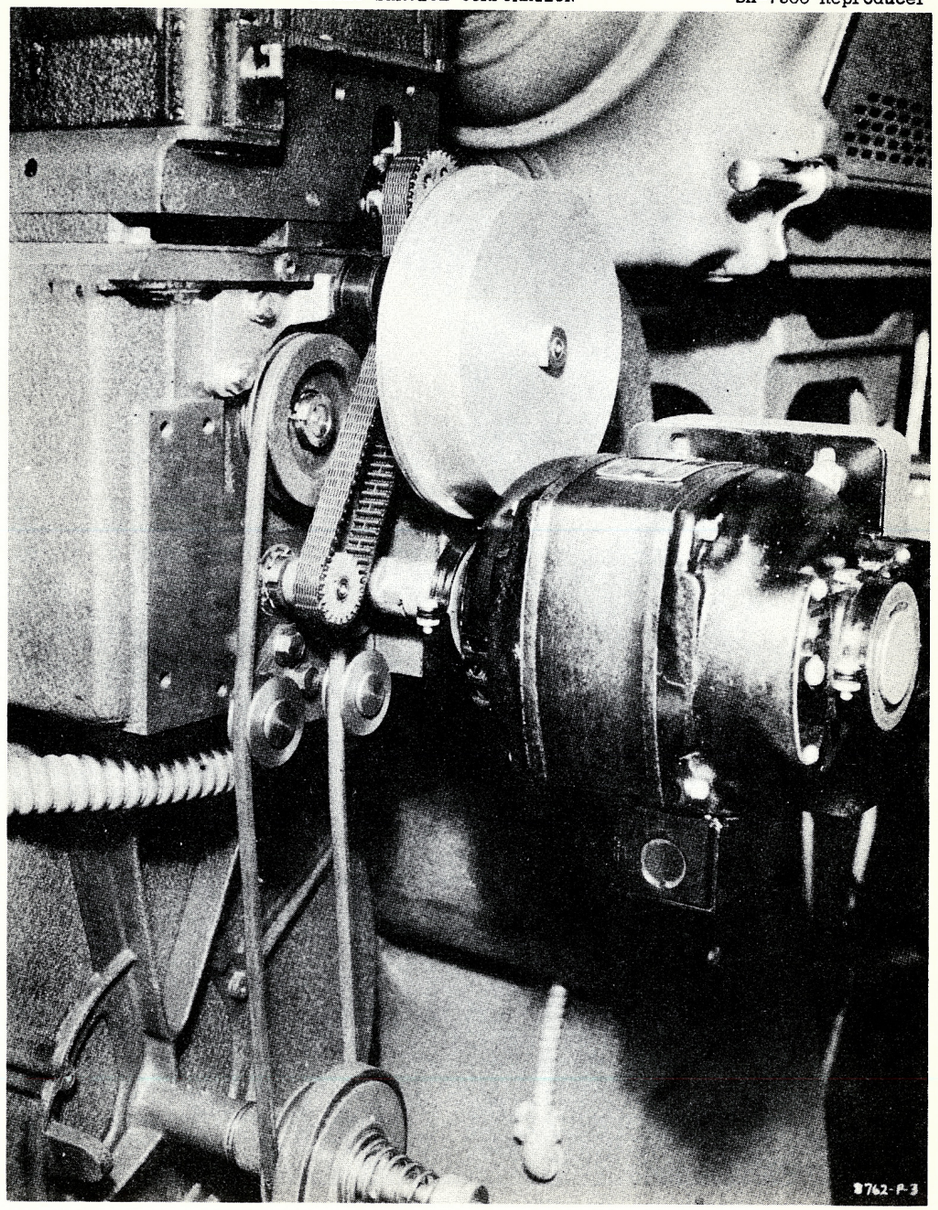

SH-7500 REPRODUCER

DRIVE SIDE ASSEMBLY WITH MODEL K AND SIMPLEX TYPE PROJ. MECH.

WE-7553 Printed in U.S.A. 9-10-41

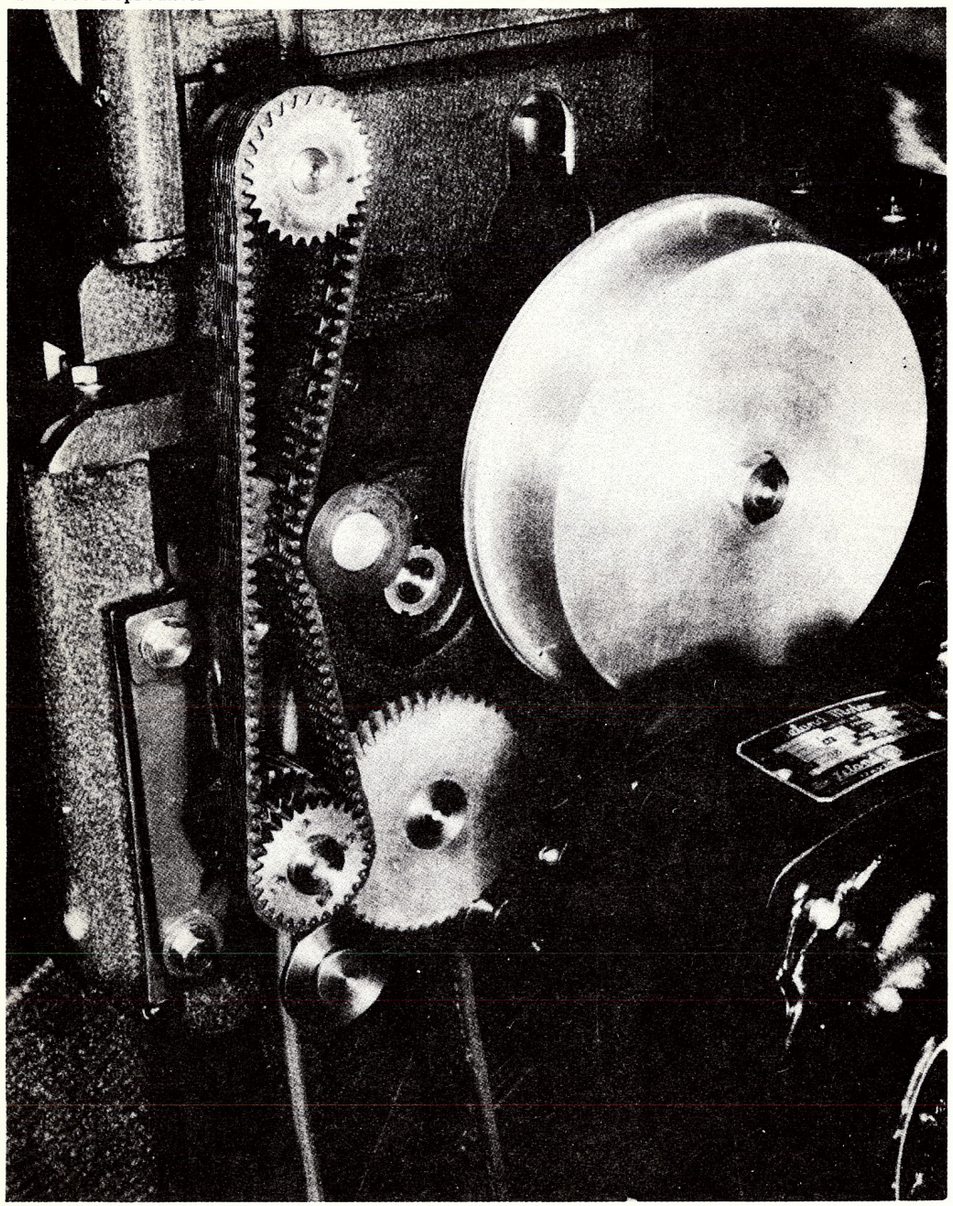

SH-7500 REPRODUCER

DRIVE SIDE ASSEMBLY WITH MODEL HK PROJ. MECH.

MOTIOGRAPH, INC.
CHICAGO, ILL. Printed in U.S.A. WE-7550-1
7-10-40

ALTEC SERVICE CORPORATION

SH-7500 Reproducer

WE-7521

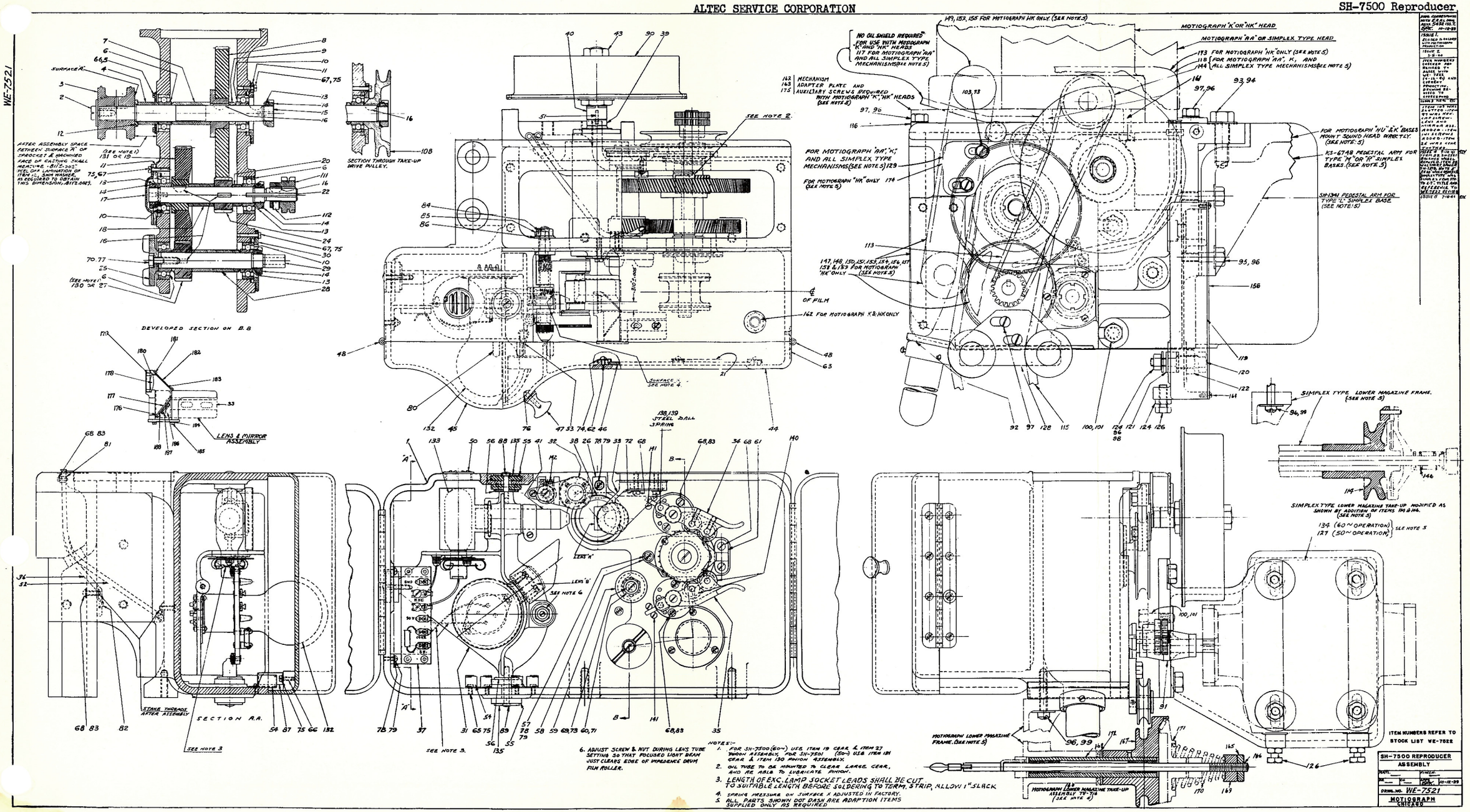

NOTES:-

1. FOR SH-7500 (60~) USE ITEM 19 GEAR & ITEM 22 PINION ASSEMBLY. FOR SH-7501 (50~) USE ITEM 18 GEAR & ITEM 130 PINION ASSEMBLY.
2. OIL TUBE TO BE MOUNTED TO CLEAR LARGE GEAR, AND BE HELD TO LUBRICATE PINION.
3. LENGTH OF EXC. LAMP SOCKET LEADS SHALL BE CUT TO SUITABLE LENGTH BEFORE SOLDERING TO TERM. STRIP, ALLOW 1" SLACK.
4. SPRING PRESSURE ON SURFACE X ADJUSTED IN FACTORY.
5. ALL PARTS SHOWN DOT DASH ARE ADAPTION ITEMS SUPPLIED ONLY AS REQUIRED.
6. ADJUST SCREW & NUT DURING LENS TUBE SETTING SO THAT FOCUSED LIGHT BEAM JUST CLEARS EDGE OF INTERLENS DRUM FILM ROLLER.

Printed in U.S.A.

ALTEC SERVICE CORPORATION

WE-7529

UNLESS OTHERWISE SPECIFIED
ALL DIMENSIONS ±.008"

CHANGES
ISSUE NO. 1 7-9-40

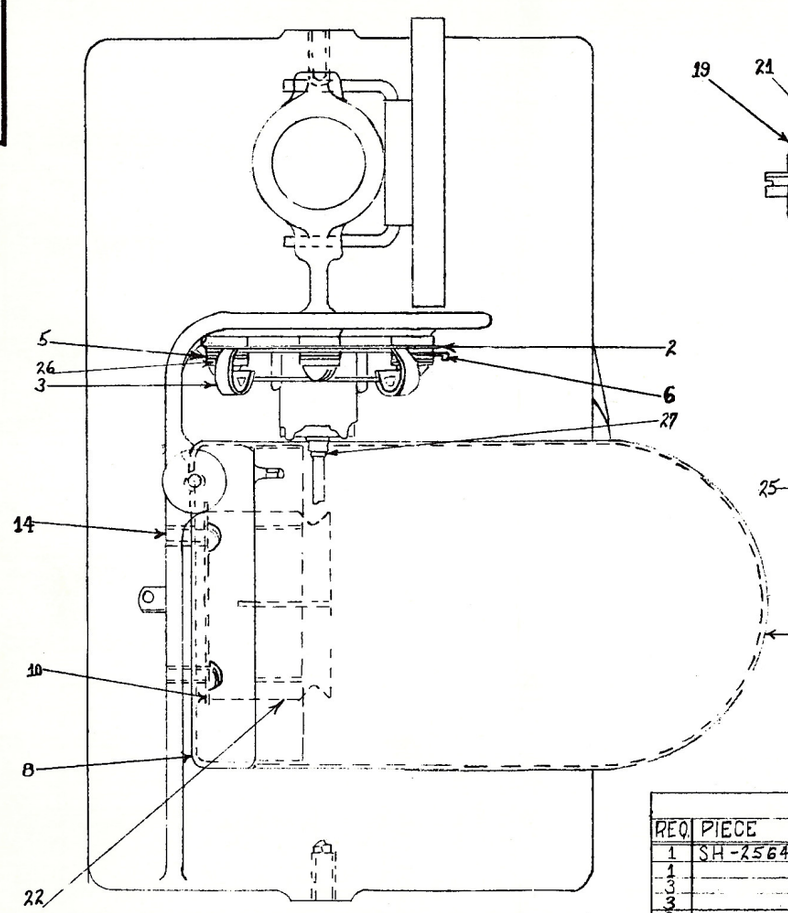

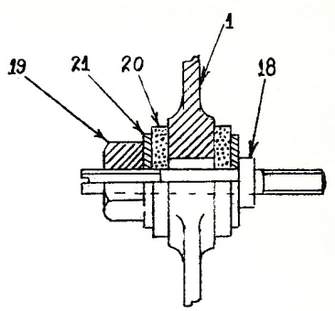

SECTION - AA

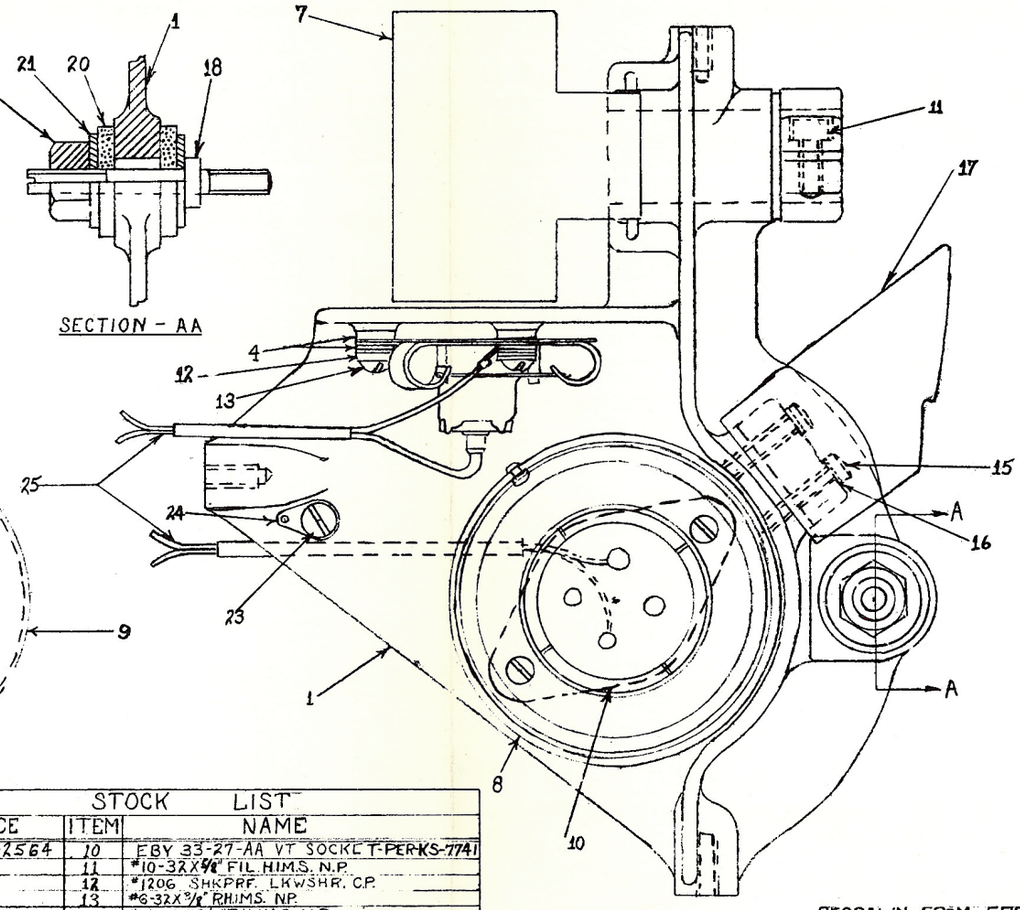

STOCK LIST			
REQ.	PIECE	ITEM	NAME
1	SH-2557	1	BRACKET
1	SH-2558	2	MOUNTING PLATE
1	SH-2559	3	LAMP SOCKET
6	SH-2560	4	INSULATING WASHER
3	SH-2561	5	WASHER
1	SH-2563	6	TERMINAL
1	SH-7020	7	LIGHT SHIELD ASSEMBLY
1	SH-7019	8	COVER BASE ASSEMBLY
1	SH-2565	9	P.E.C. COVER

STOCK LIST			
REQ.	PIECE	ITEM	NAME
1	SH-2564	10	EBY 33-27-AA VT SOCKET-PERKS-7741
1		11	#10-32 X 5/8" FIL.H.M.S. N.P.
3		12	#1206 SHKPRF. LKWSHR. C.P.
3		13	#6-32 X 3/8" RH.M.S. NP.
2		14	#10-32 X 3/8" R.H.M.S. N.P.
2		15	#8-32 X 5/8" FIL.H.M.S. N.P.
2		16	#8 STEEL WASHER N.P.
1	SH-7018	17	P.E.C. LENS ASSEMBLY
1	SH-2566	18	STUD
1		19	#10-32 HEX. NUT N.P.
2	SH-2568	20	WASHER (COPRENE)
2		21	3/4" OD 7/32 I.D. X 1/16" THK. ST. WASHER N.P.
1	SH-2569	22	P.E.C. CLIP
1		23	#6-32 X 1/4" R.H.M.S. N.P.
1		24	#2106 SHKPRF. LOCKING TERMINAL
2	SH-2539	25	#18 B&S GA. 2 CONDUCTOR STRANDED, PARALLEL MOLDED LATEX CORD 6'6
3	SH-2562	26	INSULATING BUSHING
1	SH-2723	27	EXCITER LAMP CONTACT STUD

DO NOT SCALE DRAWING

REDRAWN FROM ERPI. ASO-8832-5

TITLE SH-7500 REPRODUCER P.E.C. BRACKET ASSEMBLY (SH-7002)

MATERIAL | FINISH

DRAWN R.T. | CHKD. RTU | APPVD. RTU | DATE 7-9-40

DRWG. NO. WE-7529

MOTIOGRAPH INC.
CHICAGO, ILL.

WE - 7507

UNLESS OTHERWISE SPECIFIED
ALL DIMENSIONS ± .005"

CHANGES

ISSUE NO. 1 7-5-40
* NOTE ADDED HOUSING OUTLINE HAD OFFSET IN LOWER RIGHT CORNER. DID NOT HAVE OFFSET IN UPPER LEFT CORNER. CHANGED TO AGREE WITH PRODUCTION
ISSUE 2-9-40 RR

SLACK FILM 1 SPROCKET HOLE MINIMUM
1½ SPROCKET HOLES MAXIMUM

THREE FINGER LOOP

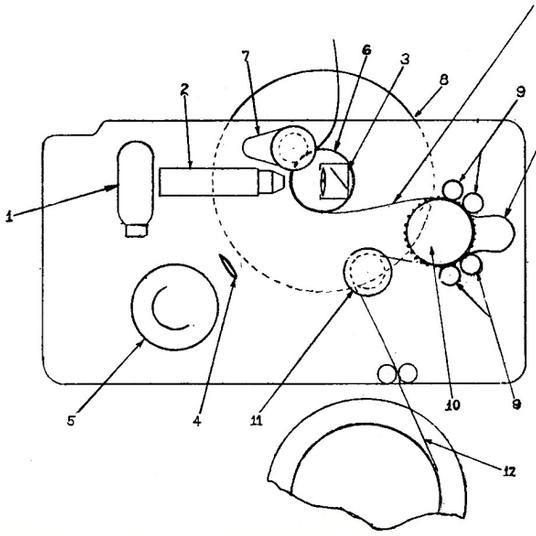

ITEM	APPARATUS	PART NO.	
1	TA-4204 EXCITER LAMP (PRE-FOCUS BASE)	SH-2671	
2	B&L-41-87-35 LENS ASSEM.	SH-2526	
3	LENS MIRROR ASSEM.	SH-7004	
4	PHOTO ELECTRIC CELL LENS ASSEM.	SH-7018	
5	6A PHOTO ELECTRIC CELL.	SH-2672	*
6	IMPEDANCE DRUM.	SH-7005	
7	IMPEDANCE ROLLER.	SH-7006	
8	STABILIZER.	SH-7016	
9	PAD ROLLERS.	SH-7024	
10	SOUND-HOLD-BACK SPROCKET.	SH-7027	
11	IDLER ROLLER.	SH-7013	
12	FILM.		

SH-2725 PHOTO CELL IS INTERCHANGEABLE WITH SH-2672 PHOTO CELL.

REVISED FROM ERPI ASO-13500-1

TITLE SH-7500 REPRODUCER SET
FILM THREADING DIAGRAM

MATERIAL		FINISH	
DRAWN AP	CHKD. RW	APPVD. RW	DATE 7-5-40

DRWG. NO. WE-7507

MOTIOGRAPH INC.
CHICAGO, ILL.

DO NOT SCALE DRAWING

ALTEC SERVICE CORPORATION

SH-7500 Reproducer

5351-37

Printed in U.S.A.

WE-7506

UNLESS OTHERWISE SPECIFIED
ALL DIMENSIONS ± .005"

CHANGES
ISSUE NO. 1 7-3-40
*NOTE ADDED
ISSUE 2 9-20-40

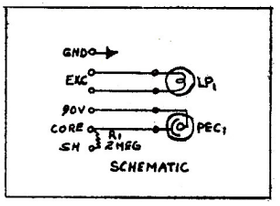

SCHEMATIC

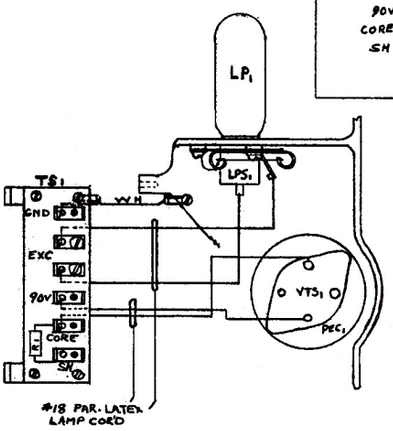

DESIG.	APPARATUS	PART NO.	
R1	IRC BT-½ ½ W. RESISTANCE 2 MEGOHM	SH-2642	
LPS1	EXC. LAMP SOCKET	SH-2539	
PEC1	W.E. 6-A PHOTO ELECTRIC CELL	SH-2672	*
TS1	TERMINAL STRIP ASSEMBLY	SH-7012	
VTS1	EBY #33-27-AA V. TUBE SOCKET	SH-2564	
LP1	TA-4204 EXCITER LAMP, 9 VOLT, 4 AMP., S.C., BAYONET PREFOCUS BASE	SH-2671	

* SH-2725 PHOTO CELL IS INTERCHANGEABLE WITH SH-2672 PHOTO CELL

DO NOT SCALE DRAWING

REVISED FROM ERPI ASL-8794-4

TITLE
SH-7500 REPRODUCER
SCHEMATIC AND WIRING DIAGRAM

MATERIAL	FINISH		
DRAWN YO	CHKD RW	APPVD RW	DATE 7-3-40

DRWG. NO. WE-7506

MOTIOGRAPH INC.
CHICAGO, ILL.

5351.38
SH-7500 Reproducer

ALTEC SERVICE CORPORATION

Printed in U.S.A.

STOCK LIST

ITEM	REQ.	PIECE	NAME
1	1	SH-2578	Impedance Roller Shaft
2	1	SH-2579	Impedance Roller Pivot Shaft
3	1	SH-2580	Impedance Roller Arm
4	1	SH-2581	Impedance Roller Spring Support
5	1	SH-2582	Pivot Shaft Nut
6	1	SH-2583	Impedance Roller
7	1	SH-2584	Impedance Roller-Shouldered
8	2	SH-2585	Impedance Roller Plate
9	2	SH-2586	Impedance Roller Spacer
10	2	SH-2587	Impedance Roller Shaft Key
11	1	SH-2588	Impedance Roller Plate
12	1	SH-2589	Impedance Roller Tension Spring
13	1	SH-2590	Impedance Roller Compression Spring
14	1	SH-2591	Impedance Roller Ring
15	1	SH-7021	Cushion Roller Assembly
16	2	SH-2592	#77034-New Depart.Bearg.Per No.Spec.Z5-1002
17	1		#8(.164")-32x5/8" OV.CSK.H.I.M.SCR.NIC.FIN.
18	4		#3(.099")-56x7/16" FLAT H.I.M. SCR.
19	8		#3(.099")-56x1/4" FLAT H.I.M. SCR. NIC.PL.
20	1		#6(.138")-32x7/16" OV.FIL. H.I.M. SCR.NIC.PL.
21	1		5/16" STD. Lockwasher
22	1		5/16" STD. Hex Nut
23	1	SH-2676	Impedance Roller Plate

1. Before assembling, all parts except bearings (Item 16) and cushion roller (Item 15) shall be cleaned in carbon tetrachloride to insure that all foreign particles such as dust, grit and chips have been removed. Before assembling the bearings the bearing seats in the arm and the seats on the shaft must be coated with a film of oil. The inner races of the bearings are marked at the high point of eccentricity and must be assembled in line with each other. Care shall be exercised to prevent cocking bearings in assembly, as subsequent forcing to straighten the bearings on either shaft or in the arm, may permanently damage them.

2. Rollers and their component parts shall spin freely on the ball bearings, and shall decelerate slowly, show no signs of stickiness due to the presence of dirt, or misalignment, or bind in the bearings.

3. Apply slushing grease to all exposed, unprotected surfaces of parts made from ferrous metal.

4. At no point shall the distance between flanges of roller be less than 1.376" nor greater than 1.378", including the side wobble of each roller, which shall not exceed .0005".

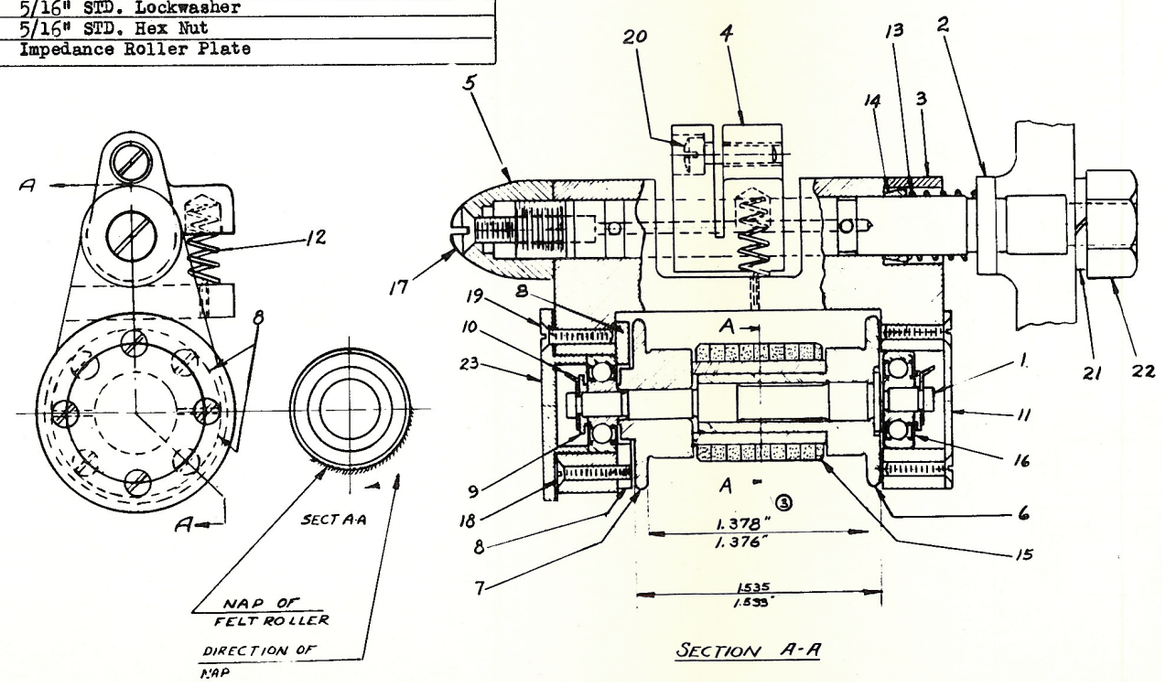

SECTION A-A

5. Items 1, 3, 6, 7, 8, 9, 10, 11, 15, 16, 18, 19, comprise the SH-7045 Assembly which should be replaced on a repair basis, unless there is a small V stamped on SH-2676 plate (Item 23), in which case component parts, except cushion rollers, are field replaceable.

CHANGES

ISSUE NO. 1

ISSUE NO. 3

DO NOT SCALE DRAWING.

TITLE SH-7500 REPRODUCER IMPEDANCE ROLLER ASSEMBLY

DRWG. NO. RSH-7003

MOTIOGRAPH INC. CHICAGO ILL.

WE-7554

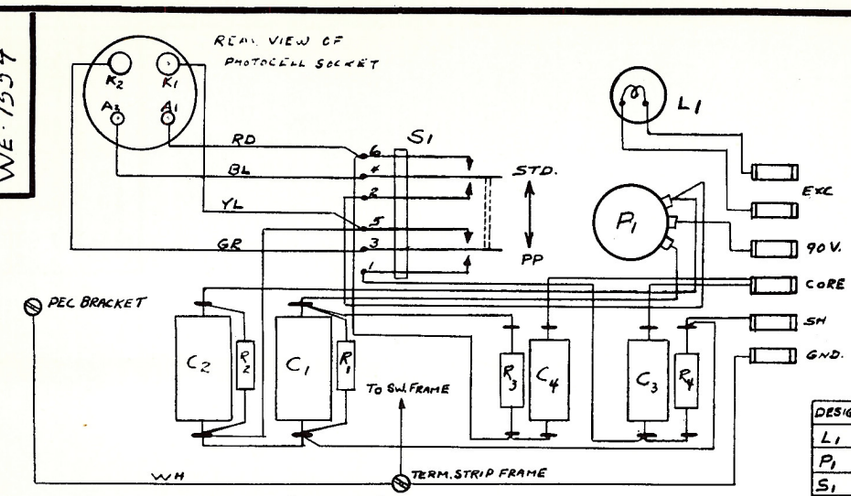

WIRING DIAGRAM

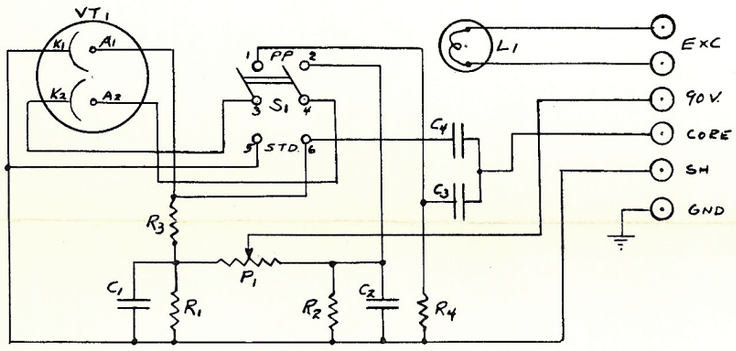

SCHEMATIC DIAGRAM

UNLESS OTHERWISE SPECIFIED
DECIMAL DIMENSIONS ± .005"
FRACTIONAL DIMENSIONS ± 1/64"
ANGULAR DIMENSIONS ± 1°

CHANGES
ISSUE NO. 16-10-43

DESIG.	APPARATUS
L_1	9V. 4A. S.C. BAY. PREF. BASE T-8 EXCITER LAMP
P_1	CENTRALAB #N-116 100,000 Ω POTENTIOMETER
S_1	UTAH #88 DPDT LONG JACK SWITCH
VT_1	RCA #920 or CETRON CE-21 TWIN PHOTOCELL
C_1C_2	0.1 MFD, 600V. PAPER TUBULAR CONDENSER
C_3C_4	0.005 MFD, 600 V. PAPER TUBULAR CONDENSER
R_1R_2	500,000 Ω, 1/2 WATT INSULATED RESISTOR
R_3R_4	2 MEG, 1/2 WATT " "

TITLE SH-7500 REPRODUCER
PUSH-PULL MODIFICATIONS
SCHEMATIC AND WIRING DIAGRAMS

MATERIAL ~ FINISH ~

DRAWN YO | CHKD. (illegible) | APPVD. RJ | DATE 6-10-43

DRWG. NO. WE-7554

MOTIOGRAPH INC.
CHICAGO, ILL.

DO NOT SCALE DRAWING

Printed in U.S.A.

1. DESCRIPTION:

The AAA Magnetic Reproducer is a film driven soundhead designed to mount between the projector mechanism and the upper magazine. It consists of an aluminum housing with a hinged door on the operating side and a rear cover that can be easily removed. The film motion filtering equipment, guide rollers, pad rollers, magnetic pickup heads, etc., are assembled on a heavy base plate before mounting in the aluminum housing. The head was especially designed for operation with the Motiograph AA or AAA projectors, or with any other standard American made projector by using proper adapters.

Due to the fact that the picture projector pulls the film down through the magnetic reproducer, the performance of the latter will depend to a certain extent upon the condition of the picture projector. There should be a minimum of wear or backlash in the projector gear train, especially as far as the motion of the upper feed sprocket of the projector is concerned. Any irregular motion or flutter in the movement of this sprocket will increase the amount of flutter elimination to be done by the filter system. The use of a stroboscope is recommended if any unusual flutter condition exists.

A minimum of Magnetic material has been used in the film transport mechanism. All rollers and impedance drums are made of aluminum and mounted on ball bearings. The 32 tooth sprocket is of the "built up" type and only the sprocket discs are of magnetic material. The tooth shape is of special design and of the "fat" tooth type which has proven best for this type sprocket.

The filter mechanism uses the tight loop system having two impedance drums and fly wheels. The filtering effect is provided by two damping rollers on the ends of long arms which pivot on shafts and housing assemblies and which are especially fitted and lubricated with a low viscosity oil. This condition is capable of reducing the flutter content to a very low level.

The pad roller assemblies are unusual in design and will latch in both open and closed positions. When adjusted at the factory, or when necessary to readjust in the field, spacing is adjusted with three thicknesses of film.

A pivoted idler roller is provided to reduce the danger of film breaking when starting the machine.

To provide synchronization between picture and sound the lower idler roller is adjustable, making it possible to obtain the necessary 28 frames separation.

The first AAA reproducers were coded 910-A and the housing did not provide sufficient clearance for some types of electric changeovers. The 910-B provided this clearance with no other changes. The 910-C has a modified filter system using longer damping roller arms. The 910-D is modified to provide a "pull away" plug for the magnetic head, and a changed position of the terminal strip to simplify wiring.

Issued by
Engineering Department
Printed in U. S. A.

September 17, 1954
Issue #1

The design provides for a film wrap of approximately 14 degrees around the pickup head for best contact and minimum wear. Sufficient tension is exerted by the damping rollers to straighten out warped or edge curled film before it reaches the scanning point.

The four track magnetic head has a nominal impedance of 30 ohms for each section, an inductance of 35 millihenries per section, and is assembled in a mu-metal shield to prevent noise pickup.

The top of the main housing, at the point where the magazine is attached, is made at an angle to tilt the magazine away from the front wall. This is a very important feature especially when large magazines are used or in cases where the projection angle exceeds 10 degrees.

The reproducer weighs approximately 22 pounds. The overall length is 11-1/4 inches and the depth is 8 inches. Its height is 7-1/2 inches at the front and it tapers off to 5-1/4 inches at the rear.

2. INSTALLATION:

Each reproducer is carefully inspected and tested before leaving the factory and, unless subjected to severe handling during shipment, should be in perfect operating condition when received.

Adjustment of rollers and magnetic head assemblies should not be changed unless it is obvious that they have been disturbed during shipment.

Packed with each reproducer are the following items which are required for installation or operation:

2 - R-20117 studs, with hex nuts for mounting reproducer to projector.
2 - R-11641 flywheels, identical but marked "upper" and "lower"
1 - A-404 wrench
1 - A-406 wrench
1 - A-407 wrench
Plus adapters, as indicated on order.

Remove the upper magazine and fire trap assembly from the projector and mount the reproducer using the R-20117 studs and nuts, being careful to line up the film slots and sprockets. Install the fire trap assembly and magazine. If necessary file the threading slot in the reproducer wider to properly align with the slot in the top of the projector mechanism.

Check rollers, drums, and sprocket to see that they revolve freely. Check the filter arms to see that they move freely within their range.

Install the flywheels on their shafts making sure that the woodruff keys remain properly seated. The upper flywheel should be installed first with its hub on the outside. The lower flywheel is then installed with its hub on the inside. A hole is provided in the front of the housing to insert the hex head wrench. These set screws must be tight, otherwise the flutter will be increased beyond the normal limits. There should be just a trace of endplay in the impedance drum assembly after tightening flywheel.

The tension on the upper magazine spindle should be adjusted to provide a smooth rotation of the reel. Any uneven movements at this point could increase the flutter content of the reproducer. The exact tension is not too important but the reel movement should be steady.

At this point the projector and optical soundhead should be inspected to make sure that CinemaScope apertures, sprockets and rollers (where required) have been installed. The entire film path should be checked to detect any parts that may cause excessive wear on the magnetic sound tracks or the enlarged picture area of the CinemaScope frame.

A small compass can be used to detect the magnetization of any projector or soundhead parts that could cause trouble in the sound or damage the recording on the magnetic tracks.

The magnetic head is a four track assembly designed to scan one 29 mil and three 63 mil tracks. These tracks are numbered from the outside as follows: 1, 2, 4 and 3. Number 4 is the 29 mil or sound effects track and when used delivers its sound to the auditorium speakers.

3. THREADING and OPERATION:

The threading chart on Drawing ASK-931 shows the film path through the reproducer and the bypass threading when using standard film. Until one is thoroughly familiar with the threading operation it may be more satisfactory to first thread the film loosely over the sprockets and rollers of the reproducer, then properly on through the projector, optical soundhead and into the lower magazine. The reproducer can now be properly threaded by working back from the top projector sprocket to the upper magazine. Place the film over the teeth on the bottom of the large sprocket and lock the roller assembly. With one hand hold the top damping roller in its normal position (against its stop to the right) and push the lower damping roller to the left against its stop. With the other hand pull the film tight over the top of the sprocket being sure that the teeth fit the holes properly, and latch the upper pad roller assembly. With the machine in operation, the filter mechanism should stabalize in approximately five seconds. It is very important during operation that the centers of the two damping rollers be aligned vertically and that they can move freely in either direction. If the rollers do not line up properly in the vertical plane, the flywheels should be removed and the tension of the compensating spring should be adjusted by moving the brass spring holders, until this condition is reached. It is not necessary to replace the flywheels until the proper adjustment of the compensating springs is obtained.

Issued by
Engineering Department
Printed in U. S. A.
September 17, 1954
Issue #1

4. ADJUSTMENT and MAINTENANCE

As received, the reproducer is ready for operation after installation of the flywheels. No lubrication is required as all rollers are mounted on specially selected sealed ball bearings. The top damper roller has flanges and is the indexing or position control with respect to film alignment over the magnetic head. When assembled on its shaft it is very important that a minimum or endplay exists, otherwise it cannot exert the proper control over the lateral movement of the film. During assembly it is sometimes necessary to use small spacing washers on the sprocket shaft to position the sprocket so that its teeth will fall exactly in the center of the sprocket holes.

The operation of the flutter filter unit depends upon the proper assembly and adjustment of the damping arm assemblies, especially the shaft and housing assemblies which allow the arms to pivot. During assembly these parts are honed together to insure proper surfaces and lubricated in such a manner as to exclude air from the assembly and keep the shaft reservoir permanently full of oil. No further attention should be required for at least a year, when the assembly should be cleaned, inspected and lubricated by the sound engineer. A specially selected oil, identified by Motiograph as Part No. LP-726, is required for this application. It will be supplied on order in 2 oz. bottles.

5. MAGNETIC HEAD ADJUSTMENT

To provide proper output level, frequency response, balance between tracks and good contact between the head gaps and each magnetic track, it is very important that the position of the magnetic heads be adjusted to meet these requirements. Three separate adjustments are provided to obtain track placement, canter, and azimuth, and they are usually adjusted in that order.

After loosening the track placement locking screw, the head can be aligned visually by moving it to a point where it covers the center portion of the film. With an 8000 cycle azimuth test film loop and an output meter connected across the output of the #2 channel, loosen the canter locking screw and rotate the head mount on its axis until the highest meter reading is obtained. Tighten lock screws. Now slightly loosen azimuth locking screws and rotate the head mount back and forth for maximum meter reading.

To complete overall adjustment realign track placement and adjust for maximum meter deflection. When making the second adjustment of the Canter it will be noticed that the same high meter reading will be obtained for several degrees of rotation, and the final setting should be in the center of this rotation. Now complete the adjustment with a realignment of the azimuth.

If it is found that channels 1, 2 and 3 are not of equal levels at 8000 cycles, the canter adjustment should be repeated in an effort to balance the channel to within $\pm$ 1.5 db of each other. Any remaining differences can be compensated for in the

preamplifiers. After the last canter adjustment it will be necessary to again realign the azimuth. It is important to have sufficient high frequency response from #4 channel to insure proper operation of the squelch amplifier circuit, when this equipment is used in connection with auditorium speakers.

It is possible that the magnetic head will sometimes become magnetized, possibly through inadvertent contact with magnetic tools or because some of the projector or magazine parts are highly magnetized. Normally a magnetized head will cause an increase of background noise, and in combination with certain conditions of the sound track may produce a background noise sounding like a swarm of "bees".

The projectionist should never "bloop" a magnetic head with a piece of metal that may be magnetized as this may transfer enough of the magnetic energy to the head to cause considerable trouble.

The following adapters are available for use with the AAA reproducer:

For Motiograph AA or AAA Mechanism, order the 11700 Assembly

For Motiograph H, HU, HK or K Mechanisms, order the 11701 assembly plus R-11854 Magazine Adapter.

For Simplex, Century and Brenkert mechanisms, order the 11702 assembly.

Simplex XL magazines are not adaptable to the Motiograph Penthouse Reproducer.

ASSOCIATED DRAWINGS and PHOTOGRAPHS

ASK-931 - Threading Diagram
ASK-932 - Wiring Diagram
ASK-933 - Assembly and Parts List
ASK-934 - Front View, Penthouse Reproducer
ASK-935 - Rear View, Penthouse Reproducer

Issued by
Engineering Department
Printed in U. S. A.
September 17, 1954
Issue #1

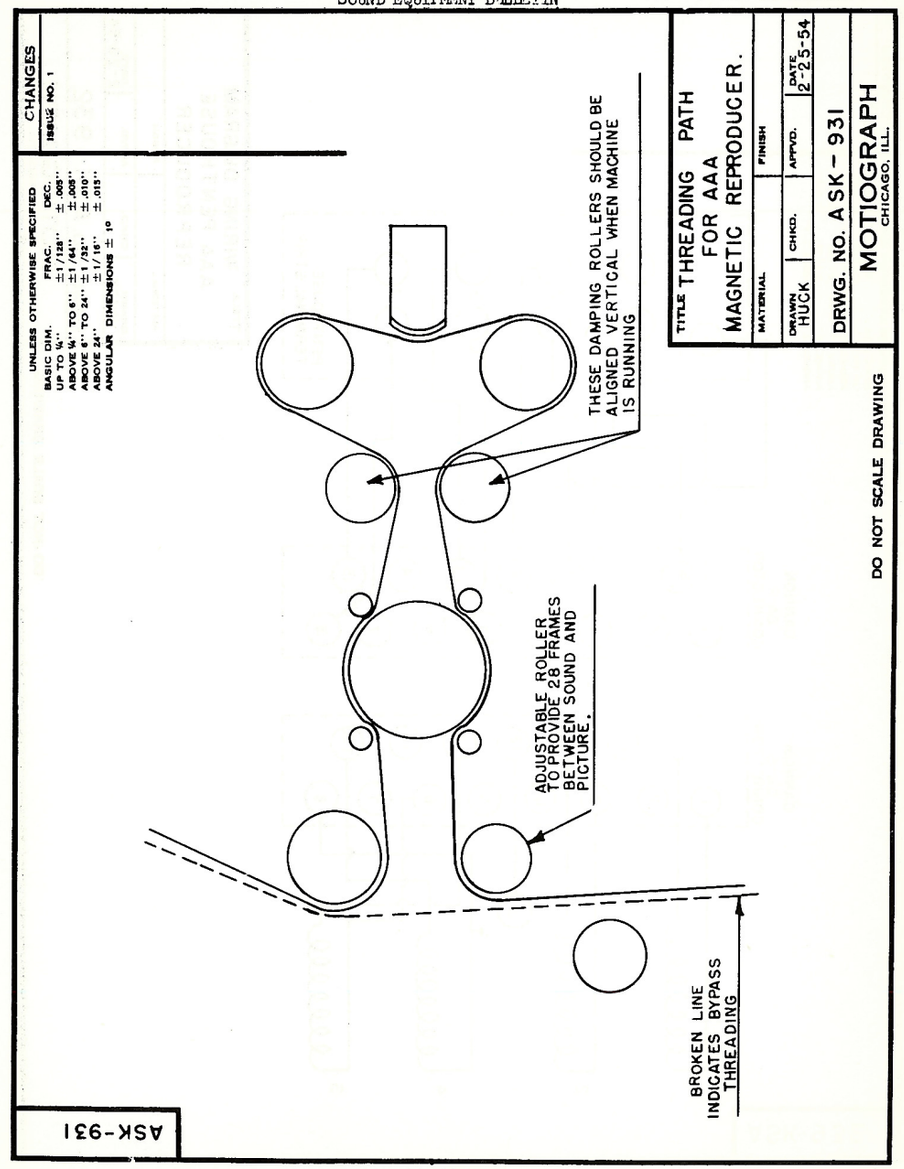

Issued by
Engineering Department
Printed in U. S. A.

September 17, 1954
Issue #1

ASK-932

September 17, 1954
Issue #1

Issued by
Engineering Department
Printed in U.S.A.

UNLESS OTHERWISE SPECIFIED

BASIC DIM.	FRAC.	DEC.
UP TO ¼"	±1/128"	±.005"
ABOVE ¼" TO 6"	±1/64"	±.005"
ABOVE 6" TO 24"	±1/32"	±.010"
ABOVE 24"	±1/16"	±.015"

ANGULAR DIMENSIONS ± 1°

CHANGES
ISSUE NO. 1

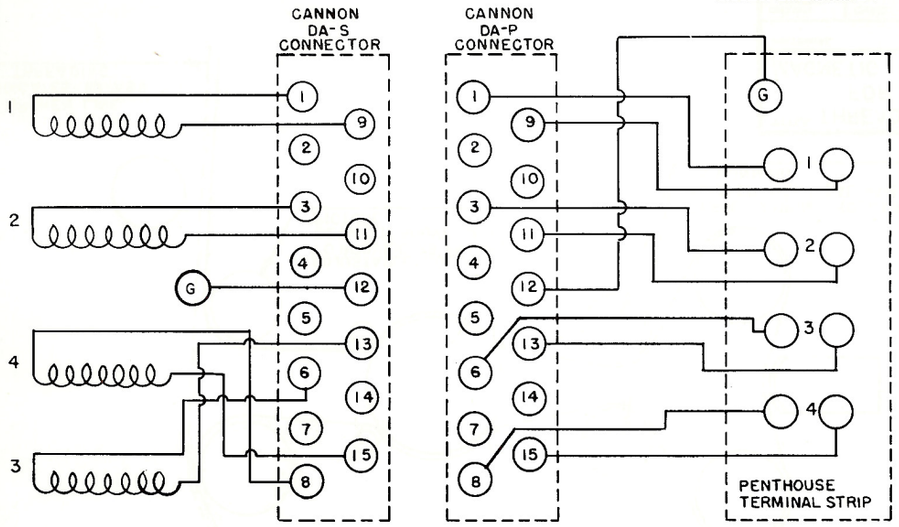

TITLE WIRING DIAGRAM
AAA PENTHOUSE
REPRODUCER

MATERIAL		FINISH	
DRAWN HUCK	CHKD.	APPVD.	DATE 2-26-54

DRWG. NO. ASK-932

MOTIOGRAPH
CHICAGO, ILL.

DO NOT SCALE DRAWING

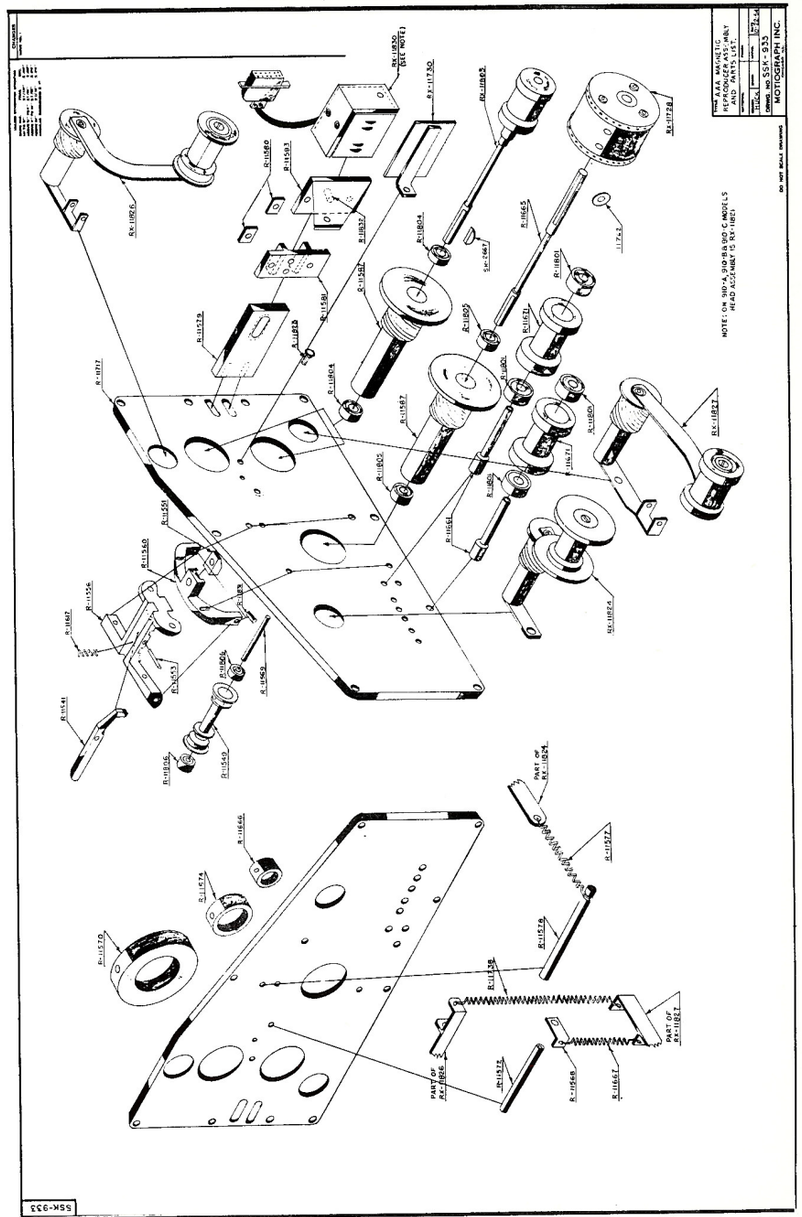

Issued by
Engineering Department
Printed in U. S. A.

November 30, 1954
Issue #2

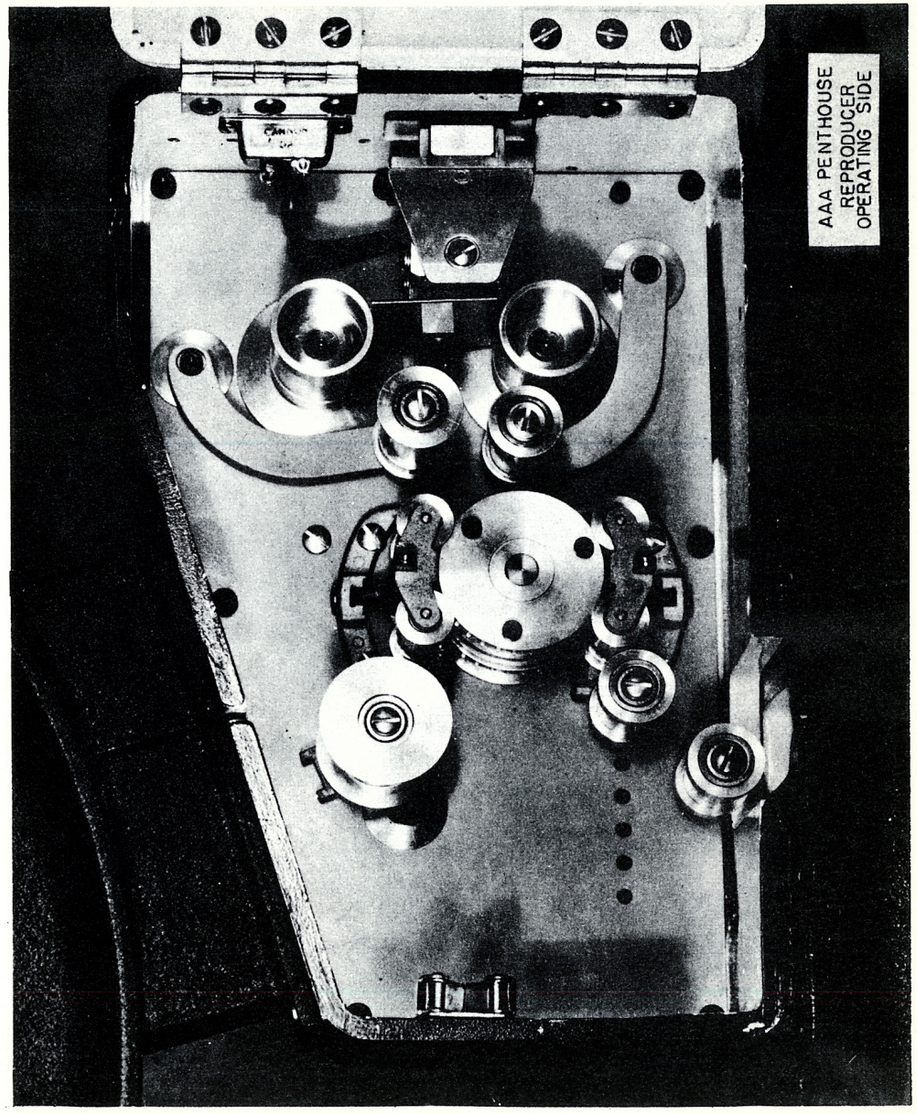

Issued by
Engineering Department
Printed in U. S. A.

September 17, 1954
Issue #1

5351.52

AAA MAGNETIC REPRODUCER

ALTEC SERVICE CORPORATION
MOTIOGRAPH
SOUND EQUIPMENT BULLETIN

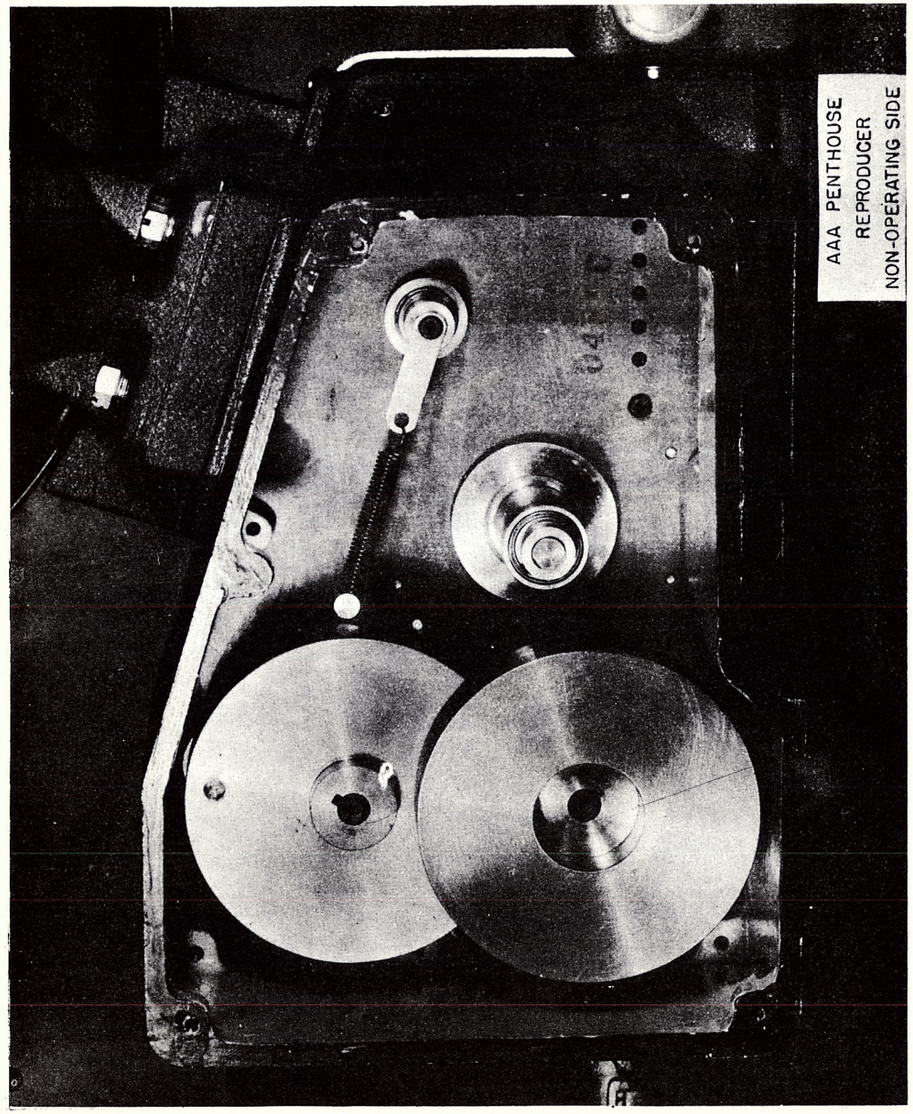

September 17, 1954
Issue #1

Issued by
Engineering Department
Printed in U. S. A.

1. PURPOSE

1.1 To announce the availability of the AQ-3008 Filter Arm Stop. Installation of this attachment will reduce the stabilization time of the AAA Magnetic (or 910-C and 910-D) Reproducers by from 3 to 4 seconds. In general, this reduction is ample to prevent wows in music right after a changeover.

2. DESCRIPTION

2.1 The AQ-3008 Stop consists of a small bar which fastens by existing holes at the lower front corner of the penthouse front panel. An adjustable slider on the rear end of the bar limits the first starting excursion of the lower filter arm.

3. INSTALLATION PROCEDURE

(a) Remove the two screws in the lower front corner holding the front panel to the housing.

(b) Attach the AQ-3008 Stop, slider to rear, being sure washers supplied set the bar out from the panel to clear the flange on the filter arm pivot.

(c) Push slider all the way to the rear, thread the machine leaving slack equal to <u>three</u> perforations from a tight loop.

(d) Start machine, and after stabilization move the slider forward and clamp it in a position leaving 3/32" clearance to the bottom of the lower filter arm. (3/32" is about equal to the thickness of two dimes).

Issued by
Engineering Department
Printed in U.S.A.
December 13, 1954
Issue #1

(e) Stop machine, unthread and rethread leaving slack equal to <u>two</u> perforations from a tight loop.

(f) Start machine and check to see that clearance remains at value set.

(g) Instruct projectionist to always thread up the projector the same way: Leave the top pad roller in the penthouse until last, pull film tight and then back off two sprocket-holes.

(h) Projectionists should occasionally check to see that while the machine is running the clearance between arm and stop is enough to prevent contact except during the starting period.

4. MERCHANDISING

4.1 For each machine, order

1 - AQ-3008 Filter Arm Stop
(Charge Classification "NET")

This attachment is available at a price of $15.00 per machine if installed at the time of a routine call. When special trips are necessary, such calls are billable, per schedule 9A or 9B of F. I. #5, whichever applies.

SYSTEM	SOUND REPRODUCER	PRE-AMPLIFIER	MAIN AMPLIFIER	CONTROL CABINET	SWITCHING PANEL	POWER UNIT	NETWORK	H.F. LOUDSPEAKER	H.F. HORN	L.F. LOUDSPEAKER	BAFFLE	LOUDSPEAKER SYSTEM	MONITOR	SYSTEM DRAWINGS
M-7	MK (2)	PA-7505 *APA-2566 *APA-2567	MA-7505 *AMA-2513 *LMA-2514	MA-7015 or PA-7015 *LPA-7025		PU-7502 *APU-2615 *APU-2614	SE-7038 *ASE-7038	SE-7015	SE-7029	SE-7034	SE-7037	SE-7508	SE-7501 (TA-7472)	LSS-7518 LSS-7517
M-9 M-9A	SH-7500 (2)	PA-7505 *APA-2566 *APA-2567	MA-7505 *AMA-2513 *LMA-2514	MA-7015 or PA-7015 *LPA-7025		PU-7502 *APU-2615 *APU-2614	SE-7038 *ASE-7038	SE-7015	SE-7029	SE-7034	SE-7037	SE-7508	SE-7501 (TA-7472)	LSS-7518 LSS-7517 LSS-7519 LSS-7515
M-9 Dual	SH-7500 (2)	PA-7505 *APA-2566 *APA-2567	MA-7505 (2) *AMA-2513 *LMA-2514	PA-7015 *LPA-7025	SE-7512 (TA-7478) *WE-7500	PU-7502 *APU-2615 *APU-2614	SE-7038 *ASE-7038	SE-7015	SE-7029	SE-7034	SE-7037	SE-7508	SE-7501 (TA-7472)	LSS-7525
M-10	SH-7500 (2)	TA-7466A *WE-7539 *WE-7540	TA-7467A *WE-7537 *WE-7538	PA-7015 *LPA-7025		PU-7502 *APU-2615 *APU-2614	SE-7038 *ASE-7038	SE-7015	SE-7029	SE-7034	SE-7037	SE-7508	SE-7501 (TA-7472)	LSS-7523 LSS-7521
M-10 Dual	SH-7500 (2)	TA-7466A *WE-7539 *WE-7540	TA-7467A (2) *WE-7537 *WE-7538	PA-7015 *LPA-7025	SE-7512 (TA-7478) *WE-7500	PU-7502 *APU-2615 *APU-2614	SE-7038 *ASE-7038	SE-7015	SE-7029	SE-7034	SE-7037	SE-7508	SE-7501 (TA-7472)	LSS-7522
M-11	SH-7500 (2)	TA-7466A *WE-7539 *WE-7540	TA-7467A *WE-7537 *WE-7538	PA-7500 (TA-7468) *WE-7505 *WE-7517		TA-7471 *WE-7502 *WE-7501	SE-7018 *SE-7018	SE-7015	SE-7016	SE-7020(2)	SE-7019	Similar SE-7511	SE-7501 (TA-7472)	LSS-7512 LSS-7513
M-11 Dual	SH-7500 (2)	TA-7466A *WE-7539 *WE-7540	TA-7467A (2) *WE-7537 *WE-7538	PA-7500 (TA-7468) *WE-7505 *WE-7517	SE-7512 (TA-7478) *WE-7500	TA-7471 *WE-7502 *WE-7501	SE-7018 *SE-7018	SE-7015(2)	SE-7016	SE-7020(2)	SE-7019	Similar SE-7522	SE-7501 (TA-7472)	LSS-7514
M-13	SH-7500 (2)	TA-7466A *WE-7539 *WE-7540	TA-7467A (2) *WE-7537 *WE-7538	PA-7500 (TA-7468) *WE-7505 *WE-7517	SE-7512 (TA-7478) *WE-7500	TA-7471 *WE-7502 *WE-7501	TA-7473 *WE-7503	594A	24A	TA-4181A (2)	TA-7396	Not coded as such	SE-7501 (TA-7472)	WE-7514 WE-7514
M-13A	SH-7500 (2)	TA-7466A *WE-7539 *WE-7540	TA-7467A (2) *WE-7537 *WE-7538	PA-7500 (TA-7468) *WE-7505 *WE-7517	SE-7512 (TA-7478) *WE-7500	TA-7471 *WE-7502 *WE-7501	SE-7018 *SE-7018	SE-7015(2)	SE-7016	SE-7049(2)	TA-7396	Not coded as such	SE-7501 (TA-7472)	WE-7514 WE-7513
M-14A	SH-7500 (2)	TA-7466A *WE-7539 *WE-7540	87E *AASO-8518 *AASR-4549 TA-7467A (2) *WE-7537 *WE-7538	PA-7500 (TA-7468) *WE-7505 *WE-7517	SE-7512 (2) (TA-7478) *WE-7500	TA-7478 *WE-7502 *WE-7501 TA-4144A *ASL-2981 *ASO-6876	SE-7018 *SE-7018	SE-7015(2)	SE-7043	SE-7034(4)	TA-7397	Not coded as such	SE-7501 (TA-7472)	WE-7516 WE-7515 WE-7508
M-15A	SH-7500 (2)	TA-7466A *WE-7539 *WE-7540	87E (2) *AASO-8518 *AASR-4549 TA-7467A (2) *WE-7537 *WE-7538	PA-7500 (TA-7468) *WE-7505 *WE-7517	SE-7512 (3) (TA-7478) *WE-7500	TA-7478 *WE-7502 *WE-7501 TA-4144A *ASL-2981 *ASO-6876	SE-7018 *SE-7018	SE-7015(4)	SE-7016(2)	SE-7034(4)	TA-7397	Not coded as such	SE-7501 (TA-7472)	WE-7516 WE-7515 WE-7508
M-17	SH-7500 (2)	TA-7466A *WE-7539 *WE-7540	118A *ESR-614686 *ESR-613790 TA-7467A (2) *WE-7537 *WE-7538	PA-7015 *LPA-7025	SE-7512A SE-7512 (TA-7478) *WE-7500	SE-7520(2) *RSE-2622	SE-7018 *SE-7018	SE-7015(2)	SE-7016	SE-7020(4)	SE-7019(2)	Similar SE-7522	SE-7501 (TA-7472)	LSS-7526
M-9B	SH-7500 (2)	PA-7505A *APA-2637 *APA-2638	MA-7505A *LMA-2650 *LMA-2649	PA-7015 *LPA-7025		SE-7520 *RSE-2622	SE-7038 *ASE-7038	SE-7015	SE-7029	SE-7034	SE-7037	SE-7508	SE-7501 (TA-7472)	LSS-7527 LSS-7528
M-911	SH-7500 (2)	PA-7505A *APA-2637 *APA-2638	MA-7505A *LMA-2650 *LMA-2649	PA-7015 *LPA-7025		SE-7520 *RSE-2622	SE-7018 *SE-7018	SE-7015	SE-7016	SE-7020(2)	SE-7019A	SE-7511	SE-7501 (TA-7472)	XSS-7535
M-911 Dual	SH-7500 (2)	PA-7505A *APA-2637 *APA-2638	MA-7505A (2) *LMA-2650 *LMA-2649	PA-7015 *LPA-7025	SE-7512 (TA-7478) *WE-7500	SE-7520 *RSE-2622	SE-7018 *SE-7018	SE-7015(2)	SE-7016	SE-7020(2)	SE-7019A	SE-7522	SE-7501 (TA-7472)	LSS-7531 LSS-7532

* Associated drawings

Issued by
Engineering Department
Printed in U.S.A.

1. DESCRIPTION

1.1 New sound systems shipped after 9-1-48 will include the required amount of RG-62-U Coaxial Cable instead of Belden #8401 as previously shipped. The RG-62-U cable is identified by its solid #22 copper core conductor polythylene dielectric material, copper shielding and black vinyl outer jacket.

1.2 This cable has a rated capacity of 14 micro-micro-farads per foot. Cable ends are dressed in much the same manner outlined in system instruction bulletins for #8401 cable. In making soldered joints care must be exercised to avoid melting the polythylene dielectric material; use a hot, well-tinned iron and remove it from the joint as soon as the solder flows. Failure to exercise care in this detail may result in melting the polythylene under the braiding which may lead eventually to a short between the solid conductor and the braided shield.

2. CORRECTION FACTORS

2.1 The following table gives cable correction factors for use in transmission tests on Motiograph sound systems installed with RG-62-U input cables 12 ft. long and inter-amplifier cables 20 ft. long. The factors are to be added algebraically to those now given in the bulletins or derived from equalization curves. As contrasted with #8401 cable, RG-62-U inter-amplifier cables up to 40 ft. long have negligible effect upon the system frequency response, and no correction factors for varying cable lengths need be applied. The apparent small loss at 55 cycles comes from the fact that the increased HF response due to the lower capacity cable extends down slightly beyond the 1000 cps reference frequency.

Frequency cps	55	130	300	1000	3000	5000	7000	8000
Corr. Factor db	0.5	0	0	0	-1.5	-3.0	-3.5	-3.0

Issued by
Engineering Department
Printed in U.S.A.

1. M-7 SYSTEMS (For components refer to Chart Pg. 5380.01)

1.1 This system is identical to Model M-9 Type Systems except that the MK Fixed Gate Reproducers are supplied instead of Model SH-7500 Mirrophonic Deluxe Reproducers. Electrical connections to MK Reproducers are the same as to SH-7500 Reproducers, and the same exciter lamp and optical system are used in both reproducers; the photocell used in the MK Reproducer has approximately the same sensitivity, so all gain and frequency response information given in the M-9 System installation notes applies also for the M-7 Type Systems.

2. M-9 SYSTEMS (For components refer to Chart Pg. 5380.01)

2.1 Amplifier Cabinet - Locate on the projection room front wall between the projectors so that extension control rods will clear port holes and other obstructions. Have the cabinet as close as possible to the left projector so that control knobs may be easily reached from its operating position. Cast stop lugs are provided for both control shafts; these go on the rods inside the cabinet with the 5/16" flat washers between lugs and cabinet side wall. Stop studs for the lugs have eccentric bushings; adjust these bushings, and the lug positions on the shafts so that parts inside the changeover switch and volume control are relieved of all stopping strain. After the system is operating check the action of the detent spring on the changeover switch shaft lug; the relation between the spring and lug should be such as to insure that a positive OFF position is obtained midway between the R (right) and L (left) positions.

2.11 Belden #8401 Coaxial Cable between reproducers and preamplifier input terminals is 10 ft. and the frequency response correction factors given in section 2.6 of these notes are based on the use of 10 ft. input cables. This is an average length which experience indicates will be satisfactory in the majority of installations.

2.111 Where it is desired to bring all projector wiring up through pedestal bases, the 10 ft. cable length will probably be insufficient in some instances. Longer cables can be accommodated, however, by suitably modifying the amplifier frequency response as specified on main amplifier wiring diagram LMA-2514. In general, satisfactory frequency response can be obtained in this manner with input cables up to about 25 ft. long.

2.112 The cables from both reproducers to preamplifier must obviously be of the same length to prevent differences in frequency response between reproducers. If for some reason they cannot be made physically equal in length, the same electrical effect can be obtained by padding the shorter cable with small condensers on the basis of a cable capacity of 30 micro-micro-farads per foot (for example, a .0001 mf. condenser is equal in effect to a little over 3 feet of cable).

2.12 The main volume control dial controls both reproducer outputs in steps of approximately 2 db. To balance machines lower the signal level of the higher input, as required, by connecting the balancing strap in the preamplifier to the appropriate resistor junction as specified in the preamplifier schematic and wiring diagrams.

2.2 SE-7501 Monitor Speaker - Suspend by its connection conduit from the projection room ceiling approximately seven feet above the floor slightly to the left of the left projector, and in line with the space between projector mechanism and lamphouse.

2.3 SE-7520 Power Unit - Locate in the projection room or in a separate enclosure if local regulations require it. The location must have adequate ventilation to carry off heat developed in the power unit.

2.4 Power Circuits - In addition to the sound system conduit specified in drawing LSS-7518, separately fused 115 volt, 60 cycle power circuits are required at each projector pedestal for the driving motor. The AC circuit to the amplifier should be provided with a suitable switch, at the panel board or in the line, since the switch on the amplifier chassis is intended for use only during amplifier servicing. Motor circuits should be fused at 15 amperes, or with Fusetrons of the correct rating for 1/6 HP motors. Amplifier circuit fuses should not exceed 3 amperes, or 2.5 ampere Fusetrons may be used. Power unit circuit should be fused only for wiring protection (15 amperes), since protective fuses are provided inside the unit. All power circuits must be at least #14 BRC except motor feed circuits, which should be not less than #12 BRC.

2.5 Speaker System (Refer to E.B. SE-7508 Loud Speaker System.)

2.6 Correction factors for SH-7500 or Model MK Reproducers plus system amplifiers for certain common test reel frequencies. Runs should be taken with a 16 ohm resistance load connected to the "0" and "16" terminals of the main amplifier in place of the stage loudspeaker load. Do not operate the amplifier without a load connected.

Frequency	55	130	300	1KC	3KC	5KC	7KC	8KC
Correction Factors (for equipment as shipped)	0	0	0	0	+1.0	+4.0	+12.0	+18.0

2.61 The above response should be obtained with input cables as specified in section 2.11 and with both the preamplifier and the main amplifier mounted in a single cabinet. If longer input cables are used, or if the preamplifier and main amplifier are mounted in separate cabinets, somewhat lower HF response values will be obtained, the exact amount depending upon the length of added cable. In such cases the HF response may be brought to normal by changing the value of certain shunt condensers in the main amplifier as specified on its diagrams.

2.7 Maximum gain of the amplifier system is approximately 95 db. Pickup losses corresponding to various reproducer exciter lamp currents are as follows (for optical system used in SH-7500 and Model MK Reproducers):

Exciter Lamp Current	Relative Sensitivity
4.0 amperes	-4.0 db
3.8 "	-6.0 db
3.6 "	-8.0 db
3.4 "	-10.0 db

3. M-9A SYSTEMS (For components refer to Chart Pg. 5380.01)

3.1 Where local conditions or regulations prohibit the mounting of a large single amplifier cabinet on the projection room front wall between the projectors, the M-9 System is supplied with a compact control cabinet for the preamplifier alone, and a separate larger cabinet to house the main amplifier. The main amplifier can thus be located at any convenient spot in the projection room.

4. M-9 DUAL SYSTEM (For components refer to Chart Page 5380.01)

4.1 For Dual Channel Systems the conduit layout and connection diagram specified in the main bulletin are replaced by the combination diagram LSS-7525, which shows a suggested rack layout and specifies conduit runs, cable types, and wire sizes. Locate the amplifier rack at least 18" from the projection room wall so as to provide easy access to the switching panel connections. Conduit connections may be brought to the top of the rack as shown, using the trough provided, or conduits may enter the rack from the bottom. Clearance opening at the bottom of the rack is approximately 3" x 18". The rack location should be such as to insure adequate amplifier ventilation, convenient access to monitor volume controls and switching panel, and good visibility of test meters.

4.2 Most of the information given in the main system bulletin applies also to the Dual Channel System with the following exceptions and notes:

Section 2.1 - Applies to preamplifier control cabinet only.

Section 2.4 - Conduit sizes are specified on Drawing LSS-7525. Separately fused AC supply circuits should be provided for each of the two main amplifiers.

Sections 2.6 & 2.7 - System gain and high frequency response will be slightly lower than that given in this section due to the paralleling of amplifier inputs.

4.3 Position "1" on the switching panel connects main amplifier No. 1 to the stage and monitor speakers. In position "1 & 2" both main amplifiers are operated in parallel, although No. 2 amplifier alone serves the monitor speaker. In position "2" No. 2 amplifier is connected to the output circuits.

ASSOCIATED DRAWINGS AND BULLETINS

LSS-7518	M-9 System, Conduit Layout
LSS-7517	M-9 System, Connection Diagram
E. B.	Amplifiers, PA-7505 and MA-7505
APA-2566	PA-7505 Preamplifier, Schematic
APA-2567	PA-7505 Preamplifier, Wiring Diagram
AMA-2513	MA-7505 Amplifier, Schematic
LMA-2514	MA-7505 Amplifier, Wiring Diagram
ASE-7038	SE-7038 Network, Schematic & Wiring Diagram
E. B.	SE-7520 Power Unit
RSE-2622	SE-7520 Power Unit, Schematic & Wiring Diagram
AMA-2512	MA-7502 Amplifier Schematic
PA-2565	PA-7501 Amplifier Schematic
APU-2516	PU-7502 Power Unit Schematic
APU-2514	PU-7502 Power Unit Wiring Diagram
LSS-7519	M9A System Conduit Layout
LSS-7515	M9A System Connection Diagram
LSS-7525	M9 Dual System Connection Diagram
WE-7500	SE-7512 (TA-7478) Switching Panel, Schematic and Wiring Diagram
E. B.	SE-7508 Loudspeaker System
LPA-7025	PA-7015 C.C. & PA-7016 Aux. Controls

1. Sound systems to which these instructions apply are in general those using PA and MA-7505-A Amplifiers such as M-9-C, M-911, M-911-Dual, M-150 and the "DR" drive-in theatre sound systems.

2. Three-machine sound systems are those including three sound reproducers, with their associated pedestals, projector mechanisms and magazines, so that a stand-by machine will always be available in the event of some emergency situation which prevents the operation of one of the machines. In such installations it is advisable to place the machine so that the center, or #2 machine, is on the longitudinal axis of the theatre so as to prevent excessive keystone effects in the projected pictures from the outside machines. The machines are numbered 1, 2 and 3 from left to right facing the screen from the projection room.

3. The system modifications for three-machine operation concern mostly the preamplifier and exciter lamp power supply equipment. Main amplifiers and output amplifiers are installed and operated in accordance with the information in the regular system equipment bulletins and diagrams.

4. An auxiliary preamplifier for the #3 machine is supplied. It consists of a single stage amplifier, constructed on the chassis of a PA-7505-A Amplifier and mounted in a PA-7015 Cabinet modified to have appropriate markings for the changeover control knobs. The cabinet is coded PA-7507. The amplifier is coded PA-7509 and it is identical to the right hand input stage of a PA-7505-A Amplifier except that resistor R-14 in the PEC voltage circuit is 75,000 instead of 100,000 ohms to compensate for there being no PEC load on this side of the circuit, and the plate circuit of the tube is brought out to the "OUTPUT" terminals on the main terminal strip instead of going to a D-1 changeover switch.

5. A specially modified PA-7505-A Preamplifier for machines #1 and #2 is supplied. It is coded PA-7508 and the modifications consist of the addition of an auxiliary terminal strip just above the D-1 changeover switch for the output coaxial cable from #3 machine, and internal modification of the switch to provide four operating positions. Looking at the switch from the shaft end, the first four contacts from the maximum counterclockwise position are strapped together so that the switch arm in this position connects the output of the LH, or #1, input stage of the PA-7508 preamplifier to its center output stage. The next four contacts connect the RH, or #2, input stage to the output stage, and the next four connect the auxiliary terminals for the #3 machine to the output stage. The remaining contacts are strapped together and thence to the amplifier ground circuit to provide for an OFF position as the switch is turned clockwise beyond the three operating positions.

6. The PA-7508 Preamplifier mounts either in a PA-7506 Cabinet, which is a modified version of the PA-7500 Cabinet used in "11"-type sound systems and having lamp substitution resistors and switches in its lower compartment, or in a second PA-7507 Cabinet, in which case the resistors and switches are located in an auxiliary housing (PA-7510 Exciter Lamp Control Cabinet) to be mounted just below the PA-7507 Cabinet. The PA-7507/PA-7510 combination will eventually supersede the PA-7506 when the present stock of the latter unit is exhausted.

7. The resistors, switches, pilot lights and terminal strip in the lower part of the PA-7506 Cabinet, or in the PA-7510 Cabinet, provide facilities for operating the three reproducer exciter lamps in series from the "EXC" output circuit of the sound system's SE-7520 Power Unit. Wiring in this assembly provides for the series connections between the individual terminal pairs for the exciter lamp circuits to each machine. Across each terminal pair is bridged a lamp substitution resistor (equal in resistance to the 9 volt, 4 ampere exciter lamp of the SH-7500 Reproducer) in series with a S.P.S.T. toggle switch. Also across each terminal pair is bridged a 32 volt pilot lamp. In normal operation, with all exciter lamps burning, and with the lamp substitution switches in their OFF positions, these pilot lights burn very dimly since they receive only the 9 volt exciter lamp voltage. When an exciter lamp burns out, however, its associated pilot light receives the full series circuit voltage of approximately 30 volts and hence lights to nearly full brilliancy, thus giving a ready indication as to which lamp in the series circuit is open. If the burned out lamp is not in the active machine the performance may be continued with little delay by snapping the appropriate lamp substitution switch to its ON position, thus restoring the series circuit to normal until the open lamp is replaced.

8. The main volume control in the PA-7508 Preamplifier follows the changeover switch in its circuits and therefore controls the output of whichever machine is in use. Individual input stage balancing controls alongside each input stage tube permit the reproducer output levels to be made equal. The changeover switch and the main volume control may be operated from any operating position by means of the extension rods and knobs which make up the PA-7026 Extension Controls, which replace the normal PA-7016 Extension Controls supplied with 2 machine jobs.

9. Except for the extension wiring to the single stage preamplifier for the #3 machine, systems having three machines are installed, wired and operated in very much the same manner as standard 2 machine jobs. As is outlined in the main system bulletins, the cabinet for the PA-7508 Preamplifier should be mounted as close as possible to the #1 machine. The cabinet for the PA-7509 Preamplifier must be mounted between machines #2 and #3 in a position which will provide good alignment between its control shaft bearings and those on the other cabinet. Since it is usually impossible to get single long control shafts into projection rooms, the PA-7026 Extension Controls include four standard length shafts which are standard except that two have #38 holes drilled in the ends opposite the forked ends to take the PA-2555 Studs of the extra PA-7014 Couplings included in these controls. If the cabinets cannot be located so

ALTEC SERVICE CORPORATION
MOTIOGRAPH
SOUND EQUIPMENT BULLETIN
5-31-49

that these couplings land inside the preamplifier cabinet in the 2-3 operating position, it will be necessary to cut the rods to suit and re-drill the stud holes during installation. Installation and adjustment procedure for the balance of the extension control components is given in the main system bulletins and it applies in the case of 3 machine jobs except for the obvious necessity for adjusting the components to provide for positive detent action for each of three changeover switch operate positions, with the OFF position being at the extreme clockwise switch position rather than being between the #1 and #2 positions.

10. Conduit and wiring runs from the #3 reproducer to its preamplifier are the same as are specified for the usual two reproducers. A separate ground lead should be run from this reproducer to the main system ground junction, for example, and the coaxial cable from its output terminals should connect to the terminals at the RH end of the resistor and condenser mounting strip in the PA-7509 Preamplifier. If possible, this cable should be cut somewhat shorter than the 12" length normally specified so as to aid in balancing the frequency response of the three machines. To avoid excessive differences in HF response between the #3 reproducer and the other two, the output circuit from the PA-7509 to the PA-7508 Preamplifier should be made via the special low capacity coaxial cable furnished with the third machine equipment and the length of cable should not exceed 10 feet. The "PLATE" terminals of the two amplifiers are paralleled via #14 BRC wire and the "6.3V A.C." terminals via KS-7133 two-conductor shielded cordage with its shield strapped to that of the similar cordage bringing tube heater power to the PA-7508 Preamplifier from the main amplifier or amplifier rack. The interconnecting wire and cable mentioned may be run in a single 1" conduit or in two 1/2" conduits run in any desired manner consistent with the 10 foot coaxial cable length limitation. The conduit run will also contain the pair of #14 BRC wires making up the exciter lamp circuit to #3 machine.

11. After all wiring connections are made and checked, turn on the system and test for signal output from three machines as outlined in the system instruction bulletin. Since the SE-7520 Power Units are normally shipped with the various adjustments approximately in the right settings for two exciter lamps, the current in the three lamp series circuit will be low. To adjust it properly, short out all of the exciter current adjusting resistor in the power unit and select for use the power unit plate transformer primary tap which gives the best approximation to 3.8 amperes series exciter lamp circuit current at average line voltage. Under these conditions the voltage at the "SPKR" terminals for the loudspeaker field circuit will be somewhat above the 24 volt nominal rating of the units but so long as the voltage measured at the unit field terminals does not exceed 30 volts their performance and life will not be adversely affected. In systems having PM loudspeakers needing no field supply this consideration of course does not apply and it is merely necessary to adjust the exciter lamp circuit current to the 3.8 ampere value by means of the plate transformer primary taps and the adjusting resistor.

12. The winding in the MA-7505-A Amplifier power transformer which supplies heater power to the preamplifier tubes has sufficient capacity to carry the additional preamplifier tube safely and the small additional voltage drop in the heater circuit will not reduce the heater terminal voltage sufficiently to affect tube performance. The additional plate current taken by the extra preamplifier tube would drop the plate voltage appreciably, but this tendency is compensated by changing R-6 in the MA-7505-A Amplifier (in both MA-7505-A Amplifiers in dual-type systems) from 30,000 ohms to 25,000 ohms. This change will ordinarily have been made in the amplifiers before shipment in three machine systems, but it should be checked when the amplifiers are installed.

ASSOCIATED DRAWING - LSS-7568

LSS-7568

CHANGES
ISSUE NO. 1 8/10/48

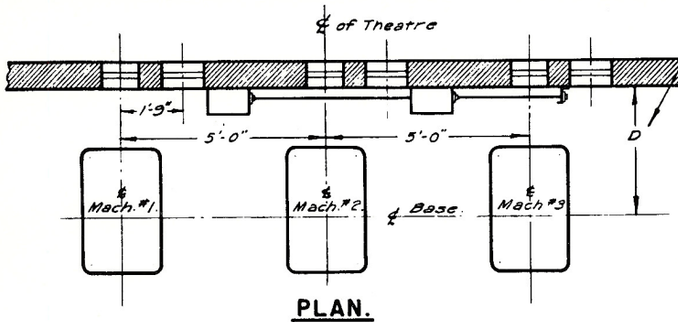

PLAN.

Dimension "D" varies with projection angle. See Motiograph Dwg. 55K-G87 (for "AA" Base) or Dwg. 55K-G88 (for "S" Base)

Note 1. 1" Conduit to system main amplifier equipment may run from top or bottom, or may enter junction box in wall back of cabinet. ¾ Conduits to machines may be open flexible type (Greenfield) or may be rigid concealed type extending from junction box down wall and up under machine bases. If possible, conduit runs to machines should not require more than 18 ft. #5E-2522 Coaxial Cable.

Note 2. 5E-2522 Coaxial Cable (RG-62-U Type) and KS-7133 Cordage (2-Conductor Shielded Cable) are supplied as part of sound system.

Note 3. Route 1-inch Conduit between PA-7507 Cabinets so that 5E-2522 Cable will be as short as possible.—not over 10 ft. long. Cut 5E-2522 Cables to Machines 1 and 2 12 ft. long, storing any excess in PA-7507 Cabinet #1. Make 5E-2522 Cable from PA-7507 Cabinet #2 to Machine #3 as much under 12 Ft. long as possible to minimize H.F. response differences.

Note 4. PA-7510, and PA-7507 Cabinets are 12⅜" High x 11½" Wide x 7" Deep. Control Rods are 2¼" and 5½" from top and 2⅜" from rear. Two ½" and one ¾" knockouts each side near bottom. Two ½" and one 1" knockouts top and bottom and one 1" knockout in center rear wall 3" from bottom, except PA-7510 which has two 1" knockouts in rear wall 1½" from top and bottom and six ½" knockouts each side.

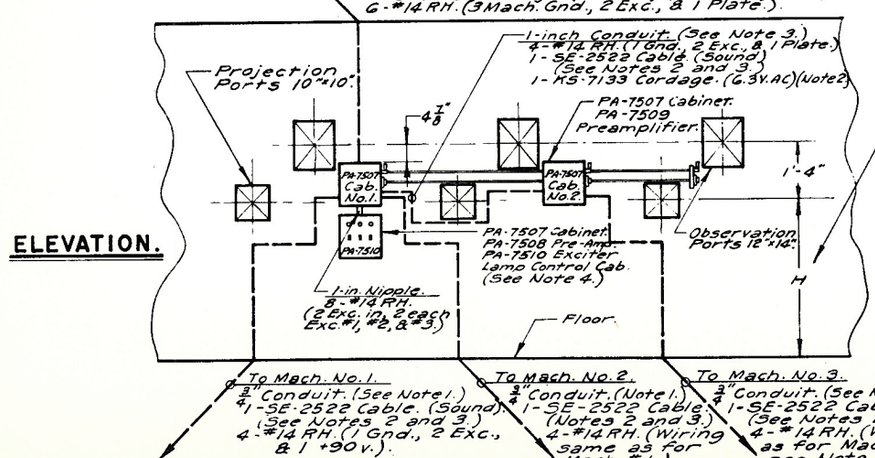

ELEVATION.

Height "H" varies with projection angle. See Motiograph Dwg. 55K-G87 (for "AA" Base) or 55K-G88 (for "S" Base).

SCALE: 1/2" = 1'-0"
1 0 1 2 3 4 FT.

TITLE
MOTIOGRAPH "9" AND "DR" TYPE SOUND SYSTEMS. PROJECTION ROOM PLAN AND FRONT WALL ELEVATION FOR 3 MACHINE INSTALLATIONS.

MATERIAL	—	FINISH	—
DRAWN	HL	CHKD	
APPVD	KW	DATE	8/10/48.

DRWG. NO. LSS-7568

MOTIOGRAPH INC.
CHICAGO, ILL.

Printed in U.S.A.

ALTEC SERVICE CORPORATION
9 TYPE SYSTEMS - 3 MACHINE OPERATION
5385-06.1

1. M-10 SYSTEMS (For components refer to chart, page 5380.01)

1.1 PA-7015 Control Cabinet - Locate on the booth front wall between the two projectors so that the extension rods will clear port holes and other obstructions. Have the cabinet as close as possible to the left machine so that the changeover knob will be easily reached from the left projector operating location. The proper location of the PA-7011 extension control parts is obvious once the preamplifier is in place. The 5/16" flat washers go over the rods inside the cabinet between the detent spring lugs and the cabinet wall. Adjust the position of the stop lugs on the shafts and the eccentric bushings on the stop studs so that the lugs take all stopping strain from the parts inside the changeover switch and volume control. After the system is operating check the adjustment of the lug on the changeover switch shaft; the relation between the lug and its detent spring should be such that a positive OFF position is obtained midway between the R (right) and L (left) positions.

1.11 Belden #8401 Coaxial Cables between reproducers and preamplifier input terminals must be 12 ft. and the frequency response correction factors given in another section of these notes are based on the use of 12 ft. input cables. This is an average length which experience indicates will be satisfactory in the majority of installations. It is suggested that cables be cut 12 ft. long even though this length may not be required in a particular installation, any excess cable may be coiled and stored in the rear of the control cabinet.

1.111 The cables from both reproducers to preamplifier must obviously be of the same length to prevent differences in frequency response between reproducers. If for some reason they cannot be made physically equal in length, the same electrical effect can be obtained by padding the shorter cable with small condensers on the basis of a cable capacity of 30 micro-micro-farads per foot (for example, a .0001 mf condenser is equal in effect to a little over 3 feet of cable).

1.112 Where it is desired to bring all projector wiring up through pedestal bases, the 12 ft. cable length will probably be insufficient in some instances. Longer cables can be accommodated, however, by selecting amplifier response curves having considerable HF rise, although in such cases the correction factors given in these notes will not apply, since they are based on the use of 12 ft. cables. In general, satisfactory frequency response can be obtained in this manner with input cables up to about 25 ft. long.

1.12 For stock reasons, M-10 Sound Systems are sometimes shipped with the type PA-7500 (TA-7468) preamplifier and control cabinet used in the larger systems. This cabinet contains a terminal strip, resistors and switches not included in the PA-7015 Cabinet normally supplied with the M-10 System.

1.121 The resistor bank in the amplifier cabinet serves two functions. The front tapped resistors afford means for balancing machine outputs independently of the regular machine volume controls so that volume control settings may be made identical if desired. A resistor is connected in parallel with each reproducer exciter lamp. As additional sections of the resistor are shorted out with the strap wire provided, the current in the associated exciter lamp is reduced an amount sufficient to lower the reproducer output in steps of approximately two db to a maximum of six db reduction.

1.122 The rear center-tapped resistor in conjunction with the toggle switches on either side of the amplifier cabinet permits operation on the other projector to be continued in case of exciter lamp burn out on one machine. Throwing either switch to its "ON" position substitutes half of resistor R-1 (WE-7505) for the exciter lamp in the associated reproducer so that operation of the series exciter lamp circuit may continue. In normal operation, both switches should be left in their OFF positions.

1.2 MA-7000 Cabinet for the TA-7467-A Amplifier - Locate at any convenient, well ventilated point in the projection room. The front of the cabinet should be easily accessible for service and adjustment of monitor volume control. The cabinet may be mounted on the front wall under the preamplifier and control cabinet provided a minimum five inch space is left between for ventilation.

1.3 SE-7501 Monitor Speaker - Suspend by its connection conduit from the projection room ceiling approximately seven feet above the floor slightly to the left of the left projector, and in line with the space between projector mechanism and lamphouse.

1.4 SE-7520 Power Unit - Locate in the projection room or in a separate enclosure if local regulations require it. The location must have adequate ventilation to carry off heat developed in the power unit.

1.5 Power Circuits - In addition to the sound system conduit specified in drawing LSS-7523, separately fused 115 volt, 60 cycle power circuits are required at each projector pedestal for the driving motor. The AC circuit to the amplifier should be provided with a suitable switch, at the panel board or in the line, since the switch on the amplifier chassis is intended for use only during amplifier servicing. Motor circuits should be fused at 15 amperes, or with Fusetrons of the correct rating for 1/6 HP motors. Amplifier circuit fuses should not exceed 3 amperes, or 2.5 ampere Fusetrons may be used. Power unit circuit should be fused only for wiring protection (15 amperes), since protective fuses are provided inside the unit. All power circuits should be not less than #14 BRC except motor feed circuits, which should be at least #12 BRC. Connect the

grounded side of the line to the silver "AC LINE" terminal on the TA-7467-A type Amplifier.

1.6 SE-7508 Speaker System - Refer to Equipment Bulletin.

1.7 Correction factors for SH-7500 Reproducer composed of SH-2671, 9 volt, 4 ampere Exciter Lamp, SH-2526 Lens Tube, SH-2725 (or W.E. 6-A) Photocell, and 12 feet Belden #8401 Cable between SH-7500 Reproducer and TA-7466-A Preamplifier.

Frequency	55	130	300	1KC	3KC	5KC	7KC	8KC
Correction Factor (db)	0	0	0	0	3.0	6.6	10.8	13.0

1.71 Amplifiers are usually shipped connected in accordance with equalization conditions (B) and (K). (See Amplifiers TA-7466-A and TA-7467-A). The total system correction factors for these conditions are thus as follows:

Frequency	55	130	300	1KC	3KC	5KC	7KC	8KC
Amplifiers	-0.1	0.7	1.4	0	-3.6	-4.1	-3.2	-2.4
Reproducers	0	0	0	0	3.0	6.6	10.8	13.0
Total	-0.1	0.7	1.4	0	-0.6	2.5	7.6	10.6

1.8 Maximum gain of the amplifier system for all equalization connections is 95 db. For system gain measurements in transmission tests the following tabulation of relative sensitivity ("Pickup loss") of the SH-7500 Reproducer at various exciter lamp currents will be useful.

Exciter Lamp Current	Relative Sensitivity (db)
4.0 amperes	-4.0
3.8 "	-6.0
3.6 "	-8.0
3.4 "	-10.0

2. M-10 DUAL SYSTEM (For components refer to chart, page 5380.01)

2.1 Double channel M-10 Systems include an additional main amplifier, an amplifier switching panel, a rack and blank panels, and a rack conduit connection trough. The two main amplifiers are provided with rack mounted cabinets, and the preamplifier is provided with a compact control cabinet to be located on the projection room front wall between the projectors. The switching panel provides facilities for connecting either or both main amplifiers into the circuit.

2.2 For double channel systems the conduit layout and connection diagram specified in the main bulletin are replaced by the combination diagram LSS-7522, which shows a suggested rack layout and specifies conduit runs, cable types, and wire sizes. Locate the amplifier rack at least 18" from the projection room wall so as to provide easy access to the switching panel connections. Conduit connections may be brought to the top of the rack as shown, using the trough provided, or conduits may enter the rack from the bottom. Clearance opening at the bottom of the rack is approximately 3" x 18". The rack location should be such as to insure adequate amplifier ventilation, convenient access to monitor volume controls and switching panel, and good visibility of test meters.

2.3 Most of the information given in Section 1 applies also to the double channel system with the following exceptions and notes:

Section 1.2 does not apply.

Section 1.5. The AC supply circuits to the two TA-7476-A Amplifiers should be separately fused, if possible, though a single line switch is sufficient.

2.4 Position "1" on the switching panel connects the upper, or No.1 TA-7467-A Amplifier to the stage and monitor speakers. In the center, or "1 & 2" position, both TA-7467-A Amplifiers are operated in parallel, although No. 2 (lower) Amplifier alone serves the monitor speaker. In position "2", No. 2 Amplifier alone is connected to the output circuits. The switch should not be operated during a performance except in case of emergency as heavy clicks in the output result from breaking the various input and D.C. circuits.

ASSOCIATED DRAWINGS AND BULLETINS

LSS-7523	Conduit Layout
LSS-7521	M-10 Sound System, Connection Diagram
ASE-7038	SE-7038 Network, Schematic and Wiring Diagram
E. B.	SE-7520 Power Unit
RSE-2622	SE-7520 Power Unit, Wiring Diagram and Schematic
E. B.	TA-7466-A Amplifier
WE-7539	TA-7466-A Amplifier, Schematic Diagram
WE-7540	TA-7466-A Amplifier, Wiring Diagram
E. B.	TA-7467-A Amplifier
WE-7537	TA-7467-A Amplifier, Schematic Diagram
WE-7538	TA-7467-A Amplifier, Wiring Diagram
WE-7517	TA-7468 Control Cabinet and TA-7469 Auxiliary Controls Assembly
WE-7505	Lamp Adjustment Schematic
LSS-7522	M-10 Dual System, Connection Diagram
WE-7500	SE-7512 Switching Panel, Schematic and Wiring Diagram
E. B.	SE-7508 Loudspeaker System
LPA-7025	PA-7015 C.C. & PA-7016 Aux. Controls

Issued by
Engineering Department
Printed in U. S. A.

1. M-11 SYSTEMS (For components refer to chart, page 5380.01)

1.1 PA-7500 (TA-7468) Control Cabinet - Locate on the booth front wall between the two projectors so that the extension control rods will clear port holes and other obstructions. Have the cabinet as close as possible to the left machine so that the changeover knob will be easily reached from the left projector operating location. In assembling the extension controls refer to Drawing WE-7517 for proper location of the various parts. The 5/16" flat washers go over the rods inside the cabinet between the detent stop lugs and the cabinet wall. Adjust the position of the stop lugs on the shafts, and the eccentric bushings on the stop studs so that the lugs take all stopping strain from the parts inside the changeover switch and volume control. After the system is operating check the adjustment of the lug on the changeover switch shaft; the relation between the lug and its detent spring should be such that a positive OFF position is obtained.

1.11 Belden #8401 Coaxial Cables between reproducers and preamplifier input terminals must be 12 ft. and the frequency response correction factors given in another section of these notes are based on the use of 12 ft. input cables. This is an average length which experience indicates will be satisfactory in the majority of installations. It is suggested that cables be cut 12 ft. long even though this length may not be required in a particular installation, any excess cable may be coiled and stored in the rear of the control cabinet.

1.111 The cables from both reproducers to preamplifier must obviously be of the same length to prevent differences in frequency response between reproducers. If for some reason they cannot be made physically equal in length, the same electrical effect can be obtained by padding the shorter cable with small condensers on the basis of a cable capacity of 30 micro-micro-farads per foot (for example, a .0001 mf condenser is equal in effect to a little over 3 feet of cable).

1.112 Where it is desired to bring all projector wiring up through pedestal bases, the 12 ft. cable length will probably be insufficient in some instances. Longer cables can be accommodated, however, by selecting amplifier response curves having considerable HF rise, although in such cases the correction factors given in these notes will not apply, since they are based on the use of 12 ft. cables. In general, satisfactory frequency response can be obtained in this manner with input cables up to about 25 ft. long.

1.12 The resistor bank in the lower part of the preamplifier cabinet serves two functions. The front tapped resistors afford means for balancing machine outputs independently of the regular machine volume controls so that volume control settings may be made identical if desired. A resistor is connected in parallel with each reproducer exciter lamp. As additional sections of the resistor are shorted out with the strap wire provided, the current in the associated exciter lamp is reduced an amount sufficient to lower the reproducer output in steps of approximately two db to a maximum of six db reduction.

1.13 The rear center-tapped resistor in conjunction with the toggle switches on either side of the amplifier cabinet permits operation on the other projector to be continued in case of exciter lamp burn out on one machine. Throwing either switch to its ON position substitutes half of resistor R-1 (WE-7505) for the exciter lamp in the associated reproducer so that operation of the series exciter lamp circuit may continue. In normal operation, both switches should be left in their OFF positions.

1.2 MA-7000 Cabinet for the TA-7467-A Amplifier - Locate at any convenient, well ventilated point in the projection room. The front of the cabinet should be easily accessible for service and adjustment of monitor volume control. The Cabinet may be mounted on the front wall under the preamplifier and control cabinet provided a minimum five inch space is left between for ventilation.

1.3 SE-7501 (TA-7472) Monitor Speaker - Suspend by its connection conduit from the projection room ceiling approximately seven feet above the floor slightly to the left of the left projector, and in line with the space between projector mechanism and lamphouse.

1.4 TA-7471 Power Unit - Locate in the projection room or in a separate enclosure if local regulations require it. The location must have adequate ventilation to carry off heat developed in the power unit. Output terminals are located behind the removable condenser guide panel in the lower section. Before operating the unit, turn all control rheostats to their extreme counter-clockwise positions.

(a) Make the adjustments when the line voltage is at or near its average value. Turn power unit switch to "OFF".
(b) Remove the cover plate from the transformer compartment, and connect a D.C. voltmeter (0-25 scale) across the "BAL.LAMP VOLTAGE" terminals. Connect the T-1 primary tap to the "125" terminal and the secondary taps to the #1 or "LOW" terminals if they are not found connected in this manner.
(c) Connect a D.C. ammeter (0-10 scale) across the "EXC.LAMP CURRENT" terminals and open the strap.
(d) Turn the power unit switch to "ON" and permit the unit to assume normal operating temperature.
(e) Adjust the "EXC.LAMP SERIES RESISTANCE" R-1 so that the exciter current is 4 amperes, and the "EXC. LAMP SHUNT RESISTANCE" R-2 so that the ballast lamp voltage is 12 volts. Make these adjustments successively, as they react on each other, and allow a minimum of 10 seconds between changes to permit the ballast lamp temperature to stabilize.

Issued by
Engineering Department
Printed in U. S. A.

NOTE: If the stated values cannot be obtained within the ranges of the rheostats, move the primary tap on the T-1 power transformer to a lower numbered terminal. For extremely low line voltage or exceptionally high circuit resistance conditions it may be necessary to move both secondary taps to higher numbered terminals.

(f) After the exciter lamp and ballast lamp circuit is adjusted, measure the voltage at the loudspeaker unit field terminals on the stage. Set this voltage as closely as possible to 24 volts with R-4, "L.S. FIELD" rheostat.

(g) Shut off power unit, disconnect meters, close strap on "EXEC. LAMP CURRENT" terminals and replace cover plates.

1.5 Power Circuits - In addition to the AC circuits shown, separately fused 115 volt, 60 cycle power circuits are required at each projector pedestal for the driving motor. The amplifier power circuits must be provided with switches, or a single safety switch may be installed in the feed circuit to the fuse panel to turn off or on the entire sound system. Motor circuits should be fused at 15 amperes, or with Fusetrons of the correct rating for 1/6 H.P. motors. Power Unit circuit fuses should be of 10 ampere rating. Amplifier circuit fuses should not exceed 3 ampere rating, or 2 ampere Fusetrons may be used. All power circuits must be at least #14 BRC except motor feed circuits, which should be not less than #12 BRC. At the TA-7467 type Amplifiers connect the grounded side of the AC circuits to the silver "AC LINE" terminals.

1.6 Speakers - Refer to E.B. SE-7511 Loudspeaker System.

1.7 Correction factors for SH-7500 Reproducer composed of SH-2671, 9 volt, 4 ampere Exciter Lamp, SH-2526 Lens Tube, SH-2725 (or W.E. 6-A) Photocell, and 12 feet Belden #8401 Cable between SH-7500 Reproducer and TA-7466-A Preamplifier.

Frequency	55	130	300	1KC	3KC	5KC	7KC	8KC
Correction Factors (db)	0	0	0	0	3.0	6.6	10.8	13.0

1.71 Amplifiers are usually shipped connected in accordance with equalization conditions (B) and (K). See TA-7467-A and TA-7466-A Amplifiers. The total system correction factors for these conditions are thus as follows:

Frequency	55	130	300	1KC	3KC	5KC	7KC	8KC
Amplifiers	-0.1	0.7	1.4	0	-3.6	-4.1	-3.2	-2.4
Reproducer	0	0	0	0	3.0	6.6	10.8	13.0
Total	-0.1	0.7	1.4	0	-0.6	2.5	7.6	10.6

1.8 Maximum gain of the amplifier system for all equalization connections is 95 db. For system gain measurements in transmission tests the following tabulation of relative sensitivity ("pickup loss") of the SH-7500 Reproducer for various exciter lamp currents will be useful.

EXCITER LAMP CURRENT	RELATIVE SENSITIVITY (db)
4.0 amperes	-4.0
3.8 "	-6.0
3.6 "	-8.0
3.4 "	-10.0

2. M-11 DUAL SYSTEMS (For components refer to chart, page 5380.01)

2.1 Double channel M-11 Systems include an additional TA-7467 type Amplifier, an amplifier switching panel, a rack and blank panels, a rack conduit connection trough, an additional HF speaker unit, a double throat for the HF cellular horn, and a transformer to match the impedance of the parallel H.F. speaker units to the network. The switching panel provides facilities for connecting either or both TA-7467 type Amplifiers into the circuit.

2.2 For double channel systems the conduit layout and connection diagram specified in the main bulletin are replaced by the combination diagram LSS-7514, which shows a suggested rack layout and specifies conduit runs, cable types, and wire sizes. Locate the amplifier rack at least 18" from the projection room wall so as to provide easy access to the switching panel connections. Conduit connections may be brought to the top of the rack as shown, using the trough provided, or conduits may enter the rack from the bottom. Clearance opening at the bottom of the rack is approximately 3" x 18". The rack location should be such as to insure adequate amplifier ventilation, convenient access to monitor volume controls and switching panel, and good visibility of test meters.

Issued by
Engineering Department
Printed in U. S. A.

2.3 Most of the information given under Section 1 applies also to the double channel system except for changes incident to having two rack mounted main amplifiers and two HF loudspeaker units. The impedance matching transformer for the HF units may be mounted in the speaker compartment of the LF folded horn near the network. The two HF units will operate in phase with each other if connections are made as shown in the diagram, but correct space phasing between the complete HF speaker assembly and LF folded horn must be determined by trial after the system is operating and after the angle of tilt of the HF speaker is adjusted for best distribution in the auditorium.

2.4 Position "1" on the switching panel connects main amplifier No. 1 to the stage and monitor speakers. In position "1 & 2" both main amplifiers are operated in parallel, although No. 2 amplifier alone serves the monitor speaker. In position "2" No. 2 amplifier is connected to the output circuits.

3. M-13A SYSTEMS (For components refer to chart, page 5380.01)

3.1 The M-13A system is similar to the M-11 Dual system with the following additions and/or substitutions:

3.11 TA-7380 Fuse Cabinet provides fused circuits for the power unit and to the two main amplifiers. Power unit circuit fuses should not be larger than 10 amperes; amplifier circuit fuses should not exceed 3 amperes, or 2.5 ampere Fusetrons may be used. The AC switches provided on power unit and amplifiers are intended only for convenience in testing, and a suitable 20 ampere master switch should therefore be provided in the AC line serving the TA-7380 Fuse Cabinet.

3.12 TA-7396 Baffle, SE-7049 LF Speaker, SE-7016 HF Horn, SE-7015 HF Speaker - Assemble the low frequency speaker section, framework, and baffle wings on the stage behind the screen, and mount the speaker units. Assemble the high frequency horn, double horn throat and high frequency speaker units. This assembly may be supported from the baffle structure, or it may be hung from lines. Tilt the horn as required to evenly distribute its output over the seating area of the theatre. When the angle of tilt is determined, adjust the relative positions of the low and high frequency speaker assemblies so that the high frequency horn mouth is as close as possible to the screen surface, and the center lines of all speaker unit diaphragms are in the same vertical plane. These center lines for the L.F. units are at a point midway between the cone apex and periphery. The centerline of the H.F. speaker unit diaphragm is at a line approximately determined by the junction between the rear cover and the body of the unit. If all connections to the speaker units are made exactly in accordance with the wiring diagram, this procedure will result in the high and low frequency speakers being in approximately the correct phase relationship.

3.13 SE-7040 Matching Transformer - Mount inside a suitable junction box as shown on the wiring diagram No. WE-7513. It is essential that the output of the HF channel from the SE-7018 Network be connected, as shown on wiring diagram WE-7513, to the SE-7040 Matching Transformer.

ASSOCIATED DRAWINGS AND BULLETINS

LSS-7512	Conduit Layout
LSS-7513	Connection Diagram
WE-7502	TA-7471 Power Unit Schematic
WE-7501	TA-7471 Power Unit Wiring Diagram
SE-7018	SE-7018 Network Schematic
E.B.	TA-7466 Amplifier
WE-7539	TA-7466 Amplifier Schematic
WE-7540	TA-7466 Amplifier Wiring Diagram
WE-7517	TA-7468 Control Cabinet & TA-7469 Aux. Controls, Assembly
WE-7505	Lamp Adjustment Schematic
E.B.	TA-7467 Amplifier
WE-7537	TA-7467 Amplifier Schematic
WE-7538	TA-7467 Amplifier Wiring Diagram
LSS-7514	M-11 Sound System (Double Channel), Connection and Conduit Diagram
WE-7500	SE-7512 (TA-7478) Switching Panel, Schematic and Wiring Diagram
WE-7514	M-13-A System, Conduit Layout
WE-7513	M-13-A System, Wiring Diagram
WE-7509	M-13-A System, Schematic
WE-7552	TA-7396 Baffle, Assembly (Photo)
E.B.	SE-7511 Loudspeaker System

Issued by
Engineering Department
Printed in U. S. A.

ALTEC SERVICE CORPORATION

M-13 SYSTEM SCHEMATIC

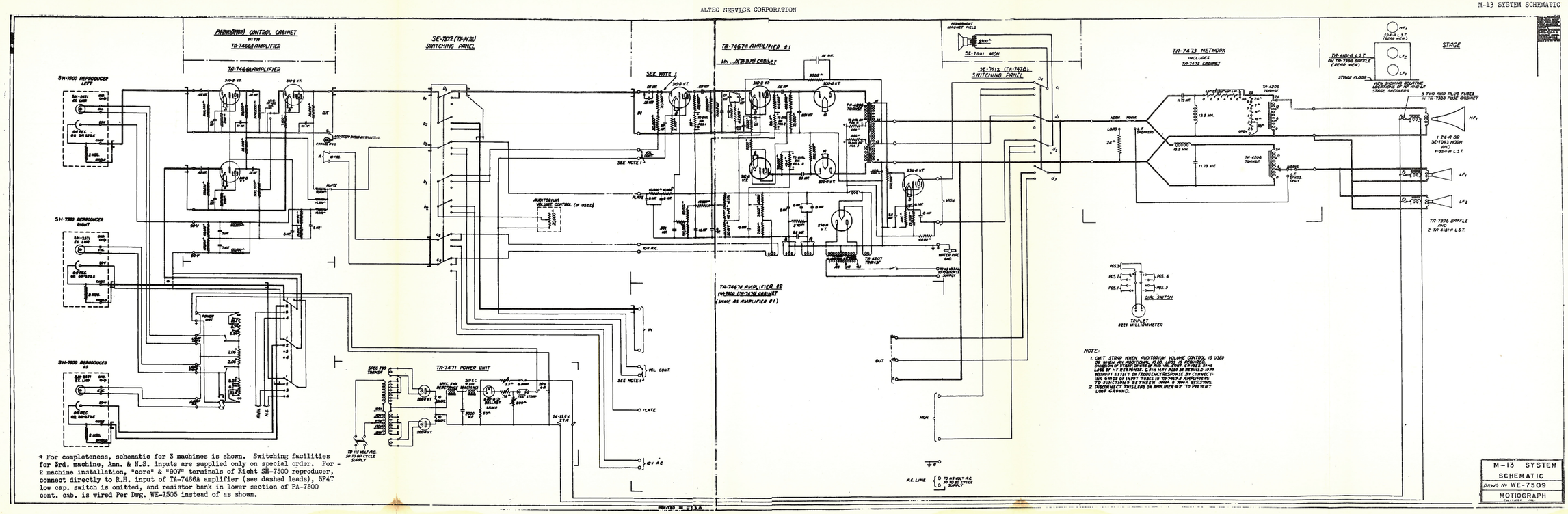

* For completeness, schematic for 3 machines is shown. Switching facilities for 3rd. machine, Ann. & N.S. inputs are supplied only on special order. For 2 machine installation, "core" & "90V" terminals of Richt SH-7500 reproducer, connect directly to R.H. input of TA-7466A amplifier (see dashed leads), 5P4T low cap. switch is omitted, and resistor bank in lower section of PA-7500 cont. cab. is wired Per Dwg. WE-7505 instead of as shown.

NOTE:

1. CHIT STRIP WHEN AUDITORIUM VOLUME CONTROL IS USED OR WHEN AN ADDITIONAL 40 DB LOSS IS REQUIRED. OMISSION OF STRIP OR USE OF MID. VOL. CONT. CAUSES SAME LOSS OF HI RESPONSE. GAIN MAY ALSO BE REWILD 1030 WITHOUT EFFECT ON FREQUENCY RESPONSE. BY CORRECTING SHIELDS OF INPUT TUBES IN TA-7467-A AMPLIFIERS. TO JUNCTION B BETWEEN 300Ω & 300Ω-A RESISTORS.
2. DISCONNECT TWISTLOK ON AMPLIFIER #1 TO PREVENT LOOP GROUND.

M-13 SYSTEM SCHEMATIC	
DRWG NO	WE-7509
MOTIOGRAPH	

5385.30

M-13-A SYSTEM SCHEMATIC

ALTEC SERVICE CORPORATION

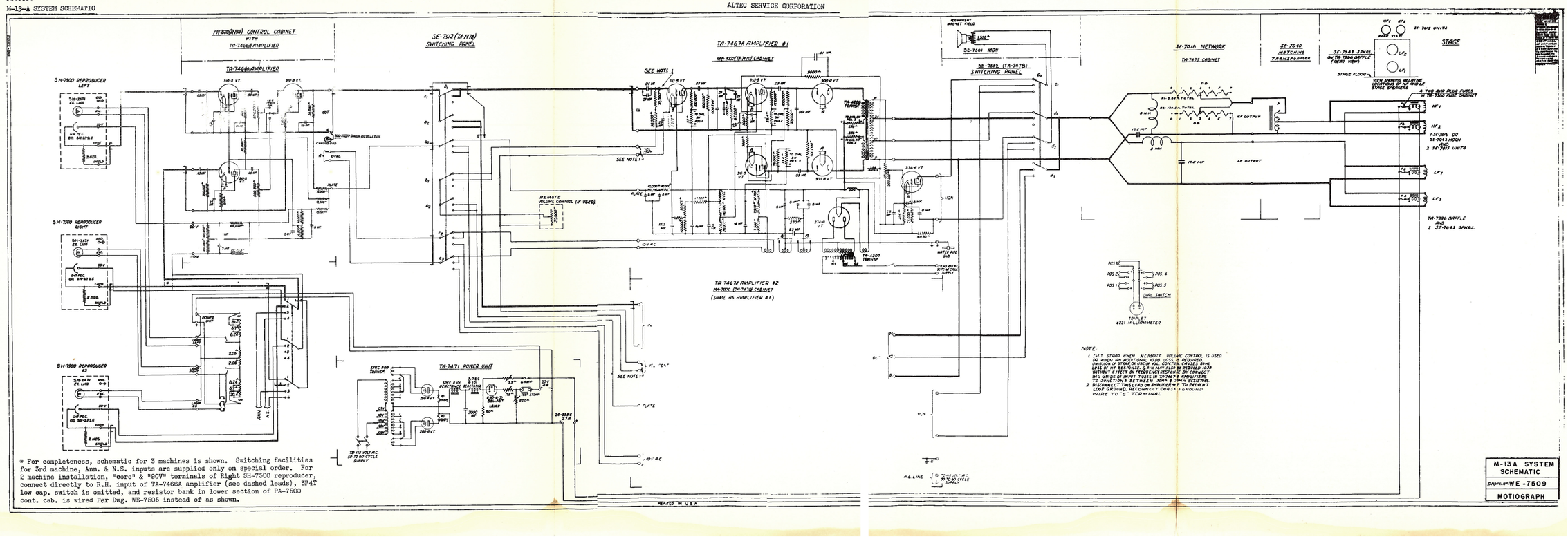

* For completeness, schematic for 3 machines is shown. Switching facilities for 3rd machine, Ann. & N.S. inputs are supplied only on special order. For 2 machine installation, "core" & "90V" terminals of Right SH-7500 reproducer, connect directly to R.H. input of TA-7466A amplifier (see dashed leads), 3P4T low cap. switch is omitted, and resistor bank in lower section of PA-7500 cont. cab. is wired Per Dwg. WE-7505 instead of as shown.

M-13A SYSTEM SCHEMATIC

DWG.# WE-7509

MOTIOGRAPH

PRINTED IN U.S.A.

1. M-14-A and M-15-A SYSTEMS are identical except for the inclusion of an additional W. E. 87 type Amplifier in the M-15-A System, making the power output 100 watts instead of 50 watts, the output power of the M-14-A System. The loudspeaker system is also larger since two additional HF units are provided in the M-15-A System to handle the increased power, and two 32 cell HF horns with double throats replace the single 60 cell HF horn used in the M-14-A System. Amplification and switching equipment is mounted on a single large rack in the M-14-A System, and on two shorter racks in the M-15-A System. For components refer to chart on page 5380.01.

2. Conduit layouts shown on Dwg. WE-7516 are suggested arrangements only. For example, the power units may be located in a separate room if local regulations require it, and the network cabinet may be mounted on the stage wall if it is desired to reduce the number of wires required between booth and stage from six to four, or if rack space is needed for auxiliary equipment such as a phonograph pickup and turntable, control track equipment, etc. Conduits to amplifier racks may enter the bottoms of the racks (clearance space is 3" x 18") in concealed conduit installations. The D.C. output circuits from the power units need not come to the racks, as shown, if local conditions indicate that conduit installations would be simplified, by running a separate 1/2" conduit from the TA-7471 Power Unit directly to the PA-7500 Control Cabinet, and another 1/2" conduit from the power unit which serves the stage loudspeaker unit fields to a junction box in the conduit line to the stage.

3. PA-7500 (TA-7468 type) Control Cabinet - Locate on the booth front wall between the two projectors so that the extension control rods will clear port holes and other obstructions. Have the cabinet as close as possible to the left machine so that the changeover knob will be easily reached from the left projector operating location. In assembling the extension controls refer to Dwg. WE-7517 for proper location of the various parts. The 5/16" flat washers go over the rods inside the cabinet between the detent stop lugs and the cabinet wall. Adjust the position of the stop lugs on the shafts, and the eccentric bushings on the stop studs so that the lugs take all stopping strain from the parts inside the changeover switch and volume control. After the system is operating check the adjustment of the lug on the changeover switch shaft; the relation between the lug and its detent spring should be such that a positive OFF position is obtained.

3.1 Belden #8401 coaxial cables between reproducers and preamplifier input terminal must be 12 feet, and the frequency response correction factors given in another section of these notes are based on the use of 12' input cables. This is an average length which experience indicates will be satisfactory in the majority of installations. It is suggested that cables be cut 12' long even though this length may not be required in a particular installation; any excess cable may be coiled and stored in the rear of the preamplifier and control cabinet.

3.11 The cables from both reproducers to preamplifier must obviously be of the same length to prevent differences in frequency response between reproducers. If for some reason they cannot be made physically equal in length, the same electrical effect can be obtained by padding the shorter cable with small condensers on the basis of a cable capacity of 30 micro-micro-farads per foot (for example, a .0001 mf. condenser is equal in effect to a little over 3 feet of cable).

3.12 Where it is desired to bring all projector wiring up through pedestal bases, the 12' cable length will probably be insufficient in some instances. Longer cables can be accommodated, however, by selecting amplifier response curves having considerable HF rise, although in such cases the correction factors given in these notes will not apply, since they are based on the use of 12' cables. In general, satisfactory frequency response can be obtained in this manner with input cables up to about 25' long.

3.2 The resistor bank in the lower part of the preamplifier cabinet serves two functions. The front tapped resistors afford means for balancing machine outputs independently of the regular machine volume controls so that volume control settings may be made identical if desired. A resistor is connected in parallel with each reproducer exciter lamp. As additional sections of the resistor are shorted out with the strap wire provided, the current in the associated exciter lamp is reduced an amount sufficient to lower the reproducer output in steps of approximately two db to a maximum of six db reduction.

3.3 The rear center-tapped resistor in conjunction with the toggle switches on either side of the amplifier cabinet permits operation on the other projector to be continued in case of exciter lamp burnout on one machine. Throwing either switch to its ON position substitutes half of resistor R-1 (WE-7505) for the exciter lamp in the associated reproducer so that operation of the series exciter lamp circuit may continue. In normal operation, both switches should be left in their OFF positions.

4. TA-7467-A Amplifiers - If use of the remote volume control feature provided is never contemplated, the wiring shown between "VOL. CONT." terminals on these amplifiers and the switching panel need not be installed. These terminals should then be strapped on both amplifiers to prevent loss of gain and HF response. If wiring to the switching panels is installed, the same electrical results can be accomplished by strapping terminals 10 and 21 on TS-1 of the switching panel.

5. Power Units must be mounted in a location having adequate ventilation to carry off the heat they develop. Output terminals are located behind the removable condenser guide panels in the lower sections of the cabinets. For concealed conduit installations suitable entrance holes for connection wires may be cut in the rear walls of the cabinets near the terminal strips.

Issued by
Engineering Department
Printed in U. S. A.

5.1 TA-7471 - Power Unit - Adjustments

(a) Make the adjustments when the line voltage is at or near its average value. Turn power unit switch to "OFF".
(b) Remove the cover plate from the transformer compartment and connect a D.C. voltmeter (0-25 scale) across the "BAL. LAMP VOLTAGE" terminal. Connect the T-1 primary tap to the "125" terminals and the secondary taps to the #1 or "LOW" terminals if they are not found connected in this manner.
(c) Connect a D.C. ammeter (0-10 scale) across the "EXC. LAMP CURRENT" terminals and open the strap.
(d) Turn the power unit switch to "ON" and permit the unit to assume normal operating temperature.
(e) Adjust the "EXC. LAMP SERIES RESISTANCE" R-1 so that the exciter current is 4 amperes, and the "EXC. LAMP SHUNT RESISTANCE" R-2 so that the ballast lamp voltage is 12 volts. Make these adjustments successively, as they react on each other, and allow a minimum of 10 seconds between changes to permit the ballast lamp temperature to stabilize.

NOTE: If the stated values cannot be obtained within the ranges of the rheostats, move the primary tap on the T-1 power transformer to a lower numbered terminal. For extremely low line voltage or exceptionally high circuit resistance conditions it may be necessary to move both secondary taps to higher numbered terminals.

(f) Shut off power unit, disconnect meters, close strap on "EXC. LAMP CURRENT" terminals and replace cover plates.

5.2 TA-4144-A Power Unit - Adjustments

(a) Change the shorting strap (flexible clip lead on panel) associated with R-1 and R-5 so that the voltage measured at the loudspeaker unit terminals on the stage is as close as possible to being 24 volts at average A.C. line voltage.
(b) Set shorting strap for R-2 to 8 amp. position.

5.3 SE-7520 Power Unit - (For stock reasons) may be substituted for the TA-4144-A Power Unit called for on the diagrams covering the M-14-A and M-15-A Systems. The performances of the two power units are identical, but methods of connection and adjustment differ to some extent. See "Power Unit, SE-7520" and Drawing RSE-2622, the combination schematic and wiring diagram for this unit.

5.31 AC line fuses are provided in the SE-7520 Power Unit. At the discretion of the installation engineer these may be strapped out in favor of a single fuse of the correct size (6 ampere) at the sound system power distribution cabinet (TA-7380).

5.32 No connection is made to the "EXC" output terminals of the SE-7520 Power Unit when it is used as a substitute for the TA-4144-A. The stage loudspeaker unit field circuit is connected to the "GND-NEG" and "4 SPKR" terminals; the wire to the system ground also connects to the "GND-NEG" terminals. A 10 ampere plug fuse should be used in the "SPKR" position of the output fuse block instead of the 3 ampere fuse called for on the power unit diagrams.

6. SE-7501 (TA-7472 type) Monitor Speaker - Suspend by its connection conduit from the projection room ceiling approximately seven feet above the floor slightly to the left of the left projector and in line with the space between projector mechanism and lamphouse.

7. TA-7380 Fuse Cabinet - Provides separately fused circuits for each power unit and amplifier. Switches as shown should be installed in the circuit to the TA-7467-A Amplifiers since the chassis switches on these amplifiers are intended only for convenience in testing. These switches may be omitted if the service line to the TA-7380 Fuse Cabinet is provided with a suitable disconnect switch. Power units and 87 type amplifiers should be fused at 6 amperes. TA-7467-A Amplifier fuses should be 3 ampere, or 2.0 Ampere Fusetrons may be used. The grounded side of the A.C. circuit should be connected to the tinned "A.C. LINE" terminal at the TA-7467-A Amplifiers, and to the "A.C." terminal nearest the end of the strip in the 87 type amplifiers. At the discretion of the installation engineer, switch contacts at the power units may be parallelled in the ungrounded side of the line, with the grounded side solidly connected to the power unit circuits. Projector driving motor circuits should be at least #12 BRC wire and should be fused at 20 amperes, or with Fusetrons of the correct rating for 1/6 H.P. motors. Separate circuits for each motor, of course, should be provided.

8. Switching Panels - Position "1 and 2" on the SE-7512 Switching Panel is not used in either the M-14-A or the M-15-A System, and the sound system should not be operated with the switch in this position. With the switch in position "1", No. 1 TA-7467-A Amplifier drives the 87 type Amplifier(s); in position "2", No. 2 TA-7467-A Amplifier drives the 87 type Amplifier(s). In the M-14-A System, position "2" on the SE-7512-A Switching Panel connects the input of the stage loudspeakers to the output of the SE-7512 Switching Panel so that either of the TA-7467-A Amplifiers may be used as an emergency amplifier in the event of trouble in the 87 type Amplifier.

8.1 In the M-14-A System, position "2" of the switch on the SE-7512-A Switching Panel is for emergency operation on one or the other of the TA-7467-A Amplifiers alone. In this system, positions "1" and "2" both connect the 87 type Amplifier into the circuit, and for normal operation the switch should be left in one or the other of these positions.

Issued by
Engineering Department
Printed in U. S. A.

8.2 In the M-15-A System having two 87 type amplifiers, the switch on the SE-7512-B Switching Panel connects No. 1 - 87 type Amplifier to the stage loudspeaker system in its "1" position. In the "2" position No. 2 - 87 type Amplifier is connected to the speaker system. The normal operating position is with the switch in its "1 & 2" position, which connects both 87 type amplifiers in parallel to the stage loudspeakers and gives a maximum output power of 100 watts.

9. TA-7397 Baffle - Assemble on the stage behind the screen (refer to Photograph WE-7552-1). Remove the speaker unit mounting boards from the speaker sections of the baffle and fasten them to the four LF speaker units securely with the bolts provided. Then replace boards and units on the baffle; there is considerably less risk of damage to the paper cones if this procedure is followed rather than attempting to mount the units on the boards while they are in place on the baffle.

10. HF Cellular Horn(s), Throat(s) and Units - For standard theatre installations the HF speaker system should be supported with the horn face(s) approximately 1/2 to 2/3 picture height. If the screen is not too large the baffle structure may be used as a support. For larger screens the HF speaker system may be supported from lines, or from suitable scaffolding fastened to the baffle. The supporting means must be arranged to permit adjustment of the angle of tilt and of the longitudinal position of the HF horn system with respect to the baffle for proper phasing. In the M-15-A System the supporting means must also permit adjustment of the angle of flare between the two HF speaker assemblies.

10.1 In the M-14-A System the angle of tilt should be adjusted so as to evenly distribute the sound energy over the seating area of the auditorium or audience space. The 60 cell HF horn gives uniform coverage over a solid angle of about 110 degrees horizontally, and 60 degrees vertically when it is supported with the longest face dimension horizontal. In a relative high and narrow auditorium, more uniform coverage and less possibility of detrimental side wall reflections may result if the horn is mounted with the longer face dimension vertical.

10.2 Each of the 32 cell HF horns in the M-15-A System gives uniform coverage over a solid angle of 90 degrees in the longer face dimension, and over 45 degrees in the shorter face dimension. In very wide theatres it is thus possible to cover almost 180 degrees if the horns are mounted with the longer face dimensions horizontal and are flared the maximum 45 degrees permissible. For very high theatres more uniform coverage may result if the horns are mounted with face dimensions vertical.

10.3 Diaphragms and field coils are not field replaceable.

11. Phasing - HF units will operate in phase with each other and LF units in phase with other LF units if all connections to the units are made in accordance with the wiring diagram. Proper space phasing between the HF speaker system and the LF speaker system is obtained by adjusting the relative longitudinal position of one to the other. There are numerous phasing methods in use. One which gives consistent results is as follows: The HF speaker system is first properly tilted (and flared, in the case of the M-15-A System) to give even distribution of sound energy throughout the audience area as evidenced by listening tests. A sound film reel containing fairly heavy male dialogue is then run. An observer in the audience area is asked to note when the greatest difference in sound quality is noted as the two leads serving the HF speaker system are reversed (this can be done at the network HF output terminals, or at the junction box on the stage wall) for various longitudinal positions of the HF speaker system with respect to the LF baffle. Once the point of maximum difference in quality is determined, even an untrained observer will be able to tell which connection gives best quality. With correct phasing, screen characters appear to be speaking from the screen rather than from some point behind it, and HF sounds are clean and clear, while LF sounds are full without being boomy.

11.1 It is usually desirable to have the HF speaker horn mouths as close as possible to the rear surface of the screen in order to reduce HF sound reflections from this surface. If the point of maximum difference in quality is noted when the HF speaker system is considerably to the rear of the baffle face (and hence some distance from the screen), another point of maximum difference will be noted if the HF speaker system is moved forward approximately 16", at the same time reversing the input leads. This will bring the HF horn mouths ahead of the baffle face; if they touch or run into the screen surface in this position, the entire loudspeaker system can then be moved backward to provide clearance between screen and horn mouths, since the LF speakers need not be close to the screen surface.

12. Balance between HF and LF output may be changed to suit auditorium acoustical conditions by changing the frequency response of the amplifier system as indicated in the following section, and by attenuating the response of the HF channel in the SE-7018 Network. For an auditorium of average acoustical properties, and assuming that the sound screen is in good condition for transmission of sound through its pores, the HF channel will need to be attenuated 2 to 4 db in order to compensate for the greater efficiency of the HF speaker units as compared with the LF units. 7 db reduction is available by changing connections to the attenuator resistors R-1 and R-2 on the network chassis.

13. Correction Factors for the combination of the SH-7500 Reproducer with 12 feet of #8401 cable between it and the TA-7466-A Preamplifier and amplifiers as usually shipped connected in accordance with equalization conditions (b) and (k), are as follows:

Frequency	55	130	300	1KC	3KC	5KC	7KC	8KC
Amplifiers	-0.1	0.7	1.4	0	-3.6	-4.1	-3.2	-2.4
Reproducers	0	0	0	0	3.0	6.6	10.8	13.0
Total	-0.1	0.7	1.4	0	-0.6	2.5	7.6	10.6

13.1 Both TA-7467-A Amplifiers should obviously be equalized in the same manner since they are used interchangeably. No correction factors for the 87 type Amplifiers are required as the frequency response of these amplifiers is essentially flat over the range of 55 cycles to 8 KC.

14. Maximum gain of the amplifier system for all equalization connections is 104 db. For system gain measurements in transmission tests the following tabulation of relative sensitivity ("pickup loss") of the SH-7500 Reproducer for various exciter lamp currents will be useful.

EXCITER LAMP CURRENT	RELATIVE SENSITIVITY (db)
4.0 Amperes	-4.0
3.8 "	-6.0
3.6 "	-8.0
3.4 "	-10.0

ASSOCIATED DRAWINGS AND BULLETINS

WE-7516	M-14-A and M-15-A Systems, Conduit Layout
WE-7515	M-14-A and M-15-A Systems, Wiring Diagram
WE-7508	M-14-A and M-15-A Systems, Schematic
WE-7501	TA-7471 Power Unit, Wiring Diagram
SE-7018	SE-7018 Network, Schematic and Wiring Diagram
WE-7500	SE-7512 (TA-7478) Switching Panel, Schematic and Wiring Diagram
WE-7552	TA-7396 Baffle, Assembly (Photo)
AASO-8518	87-E Amplifier, Schematic Diagram
AASR-4549	87-E Amplifier, Wiring Diagram
E. B.	TA-7466 Type Amplifier
WE-7539	TA-7466 Type Amplifier Schematic
WE-7540	TA-7466 Type Amplifier, Wiring Diagram
WE-7517	PA-7500 (TA-7468) Control Cabinet and PA-7011 (TA-7469) Aux. Controls, Assembly
WE-7505	PA-7500 (TA-7468) Control Cabinet, Schematic and Wiring Diagram
E. B.	TA-7467 Type Amplifier
WE-7537	TA-7467 Type Amplifier, Schematic
WE-7538	TA-7467 Type Amplifier, Wiring Diagram
WE-7502	TA-7471 Power Unit, Schematic

Issued by
Engineering Department
Printed in U. S. A.

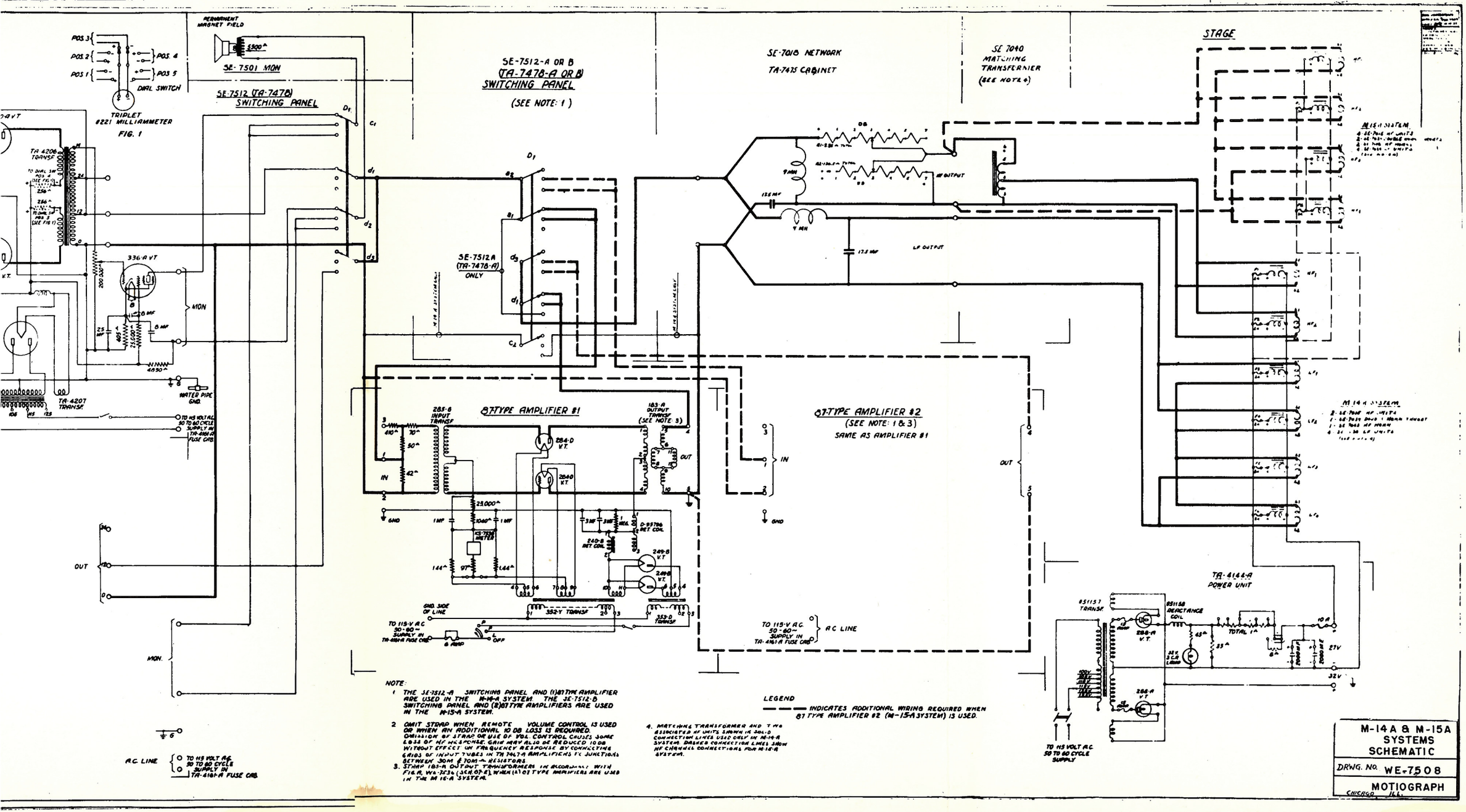
POS 3
POS 2
POS 1
POS 4
POS 5
DIAL SWITCH
TRIPLET #221 MILLIAMMETER
FIG. 1
PERMANENT MAGNET FIELD
SE-7501 MON
SE-7512 (TA-7478) SWITCHING PANEL
SE-7512-A OR B (TA-7478-A OR B) SWITCHING PANEL
(SEE NOTE: 1)
SE-7018 NETWORK
TA-7475 CABINET
SE-7040 MATCHING TRANSFORMER
(SEE NOTE 4)
STAGE
TA-4206 TRANSF
TA-4207 TRANSF
336-A VT
MON
WATER PIPE GND.
TO 115 VOLTS 50 TO 60 CYCLE SUPPLY IN TA-4161-A FUSE CRD.
SE-7512-A (TA-7478-A) ONLY
87-TYPE AMPLIFIER #1
285-B INPUT TRANSF
183-A OUTPUT TRANSF (SEE NOTE 3)
284-D V.T.
284-C V.T.
87-TYPE AMPLIFIER #2
(SEE NOTE: 1 & 3)
SAME AS AMPLIFIER #1
IN
OUT
GND
HF OUTPUT
LF OUTPUT
9 MH
135 MF
17.5 MF
TA-4144-A POWER UNIT
351157 TRANSF
351158 REACTANCE COIL
284-A V.T.
TOTAL 1A
27V
32V
TO 115 VOLT A.C. 50 TO 60 CYCLE SUPPLY
GND. SIDE OF LINE
TO 115-V A.C. 50-60~ SUPPLY IN TA-4161-A FUSE CRD
352-Y TRANSF
353-D TRANSF
A.C. LINE
TO 115 VOLT A.C. 50 TO 60 CYCLE SUPPLY IN TA-4161-A FUSE CRD.
NOTE:
1 THE SE-7512-A SWITCHING PANEL AND (1)87 TYPE AMPLIFIER ARE USED IN THE M-14-A SYSTEM. THE SE-7512-B SWITCHING PANEL AND (2)87 TYPE AMPLIFIERS ARE USED IN THE M-15-A SYSTEM.
2 OMIT STRAP WHEN REMOTE VOLUME CONTROL IS USED OR WHEN AN ADDITIONAL 10 DB LOSS IS REQUIRED. OMISSION OF STRAP OR USE OF VOL. CONTROL CAUSES SOME LOSS OF HF RESPONSE. GAIN MAY ALSO BE REDUCED 10 DB WITHOUT EFFECT ON FREQUENCY RESPONSE BY CONNECTING GRIDS OF INPUT TUBES IN TA 7417-A AMPLIFIERS TX JUNCTIONS BETWEEN 30M & 70M-A RESISTORS.
3 STAMP 183-A OUTPUT TRANSFORMERS IN ACCORDANCE WITH FIG A, WA-32316 (SEH 07-8) WHEN (2) 87 TYPE AMPLIFIERS ARE USED IN THE M 15-A SYSTEM.
4 MATCHING TRANSFORMER AND T.M.S. ASSOCIATED HF UNITS SHOWN IN SOLID CONNECTION LINES USED ONLY IN M-14-A SYSTEM. DASHED CONNECTION LINES SHOW HF CHANNEL CONNECTIONS FOR M-15-A SYSTEM.
LEGEND
INDICATES ADDITIONAL WIRING REQUIRED WHEN 87 TYPE AMPLIFIER #2 (M-15-A SYSTEM) IS USED.
M-14-A SYSTEM
M-15-A SYSTEM
M-14A & M-15A SYSTEMS SCHEMATIC
DRWG. NO. WE-7508
MOTIOGRAPH
CHICAGO, ILL.

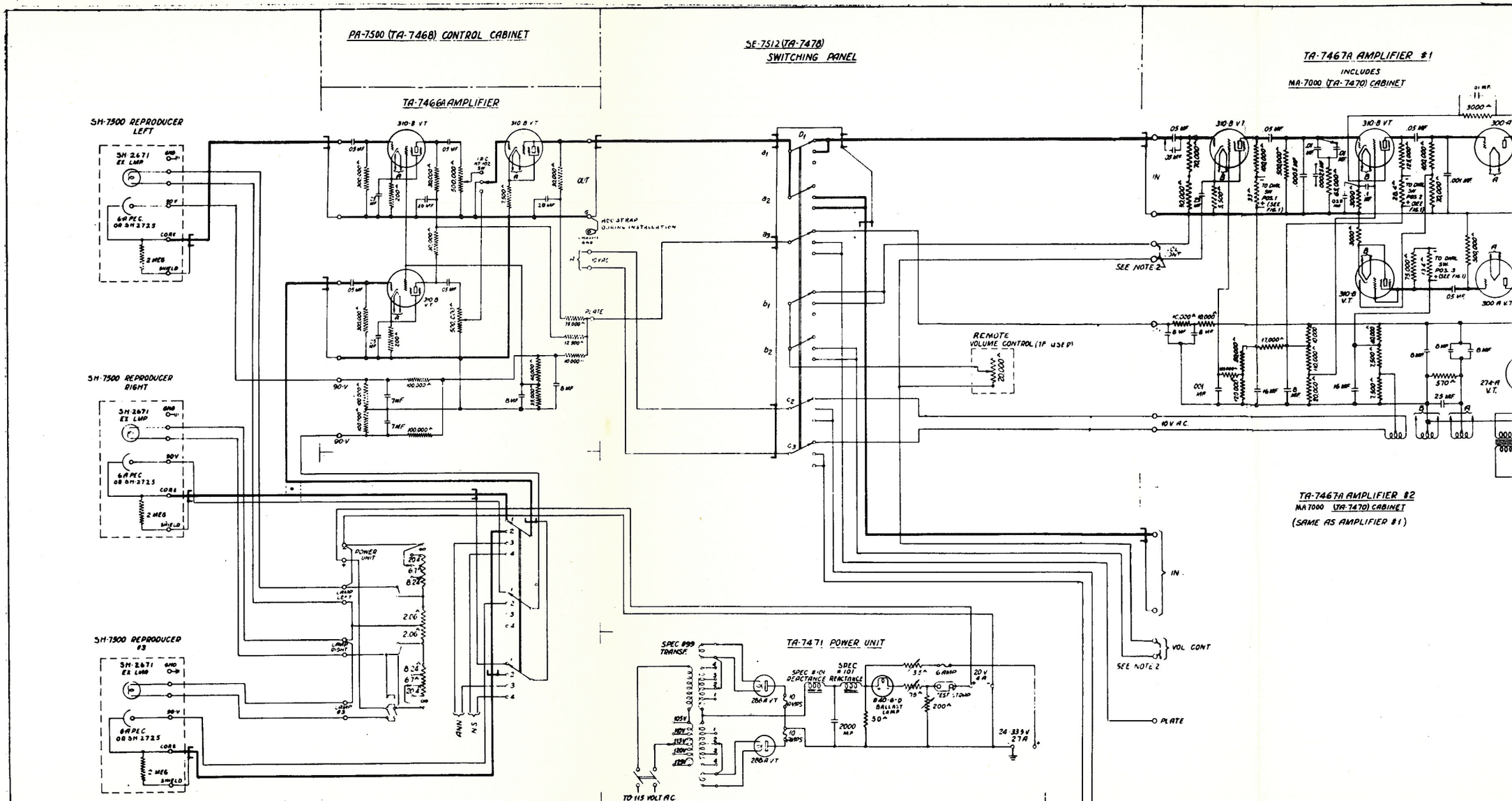

* For completeness, schematic for 3 machines is shown. Switching facilities for 3rd. machine, Ann. & N. S. inputs are supplied only on special order. For 2 machine installation, "core" & "90V" terminals of Right SH-7500 reproducer, connect directly to R.H. input of TA-7466A amplifier (see dashed leads), 3P4T low cap. switch is omitted, and resistor bank in lower section of PA-7500 cont. cab. is wired Per Dwg. WE-7505 instead of as shown.

1. The M-17 SYSTEM is similar to the M-14-A SYSTEM with the following additions and/or substitutions. (Refer to chart, page 5380.01, for component parts)

1.1 PA-7015 Control Cabinet (Refer to Section 3, M-14-A SOUND SYSTEMS, Installation Notes)

1.2 118-A Amplifier (Refer to Equipment Bulletin)

1.3 SE-7512 & SE-7512-A Switching Panels

1.31 The M-17 System may be operated as a 50 watt maximum power output system by setting the SE-7512-A Sw. Panel switch to either its "1" or "1 & 2" position, and the SE-7512 Sw. Panel switch to its "1" (#1 TA-7467-A Amplifier in use as a driver), or "2" position (#2 TA-7467-A Amplifier in use as a driver). In the event of trouble in the 118-A Amplifier, the system may be used with 30 watts maximum power output by turning the SE-7512-A Switch to its "2" position, and the SE-7512 Switch to its "1 & 2" position. Either TA-7467-A Amplifier may be used alone to give 15 watts power output by leaving the SE-7512-A Switch in the "2" position, and turning the SE-7512 Switch to its "1" or "2" position.

1.4 SE-7520 Power Unit (Refer to Section 5, M-14-A SYSTEMS, Installation Notes)

1.41 The #1 Power Unit serves only the exciter lamp supply circuit and the #2 Unit only the loudspeaker unit field supply circuit.

1.5 Speaker System

1.51 Similar to SE-7522 with additional SE-7019 Baffle Section, intended to rest one on top of the other. Refer to E. B. Loudspeaker System.

1.6 Maximum Gain - 131 db. (Refer to Section 14, M-14-A SYSTEMS, Installation Notes)

1.61 If the TA-7466-A Amplifier volume control setting can be reduced three steps when the 118-A Amplifier is switched into the circuit, still maintaining the same volume of sound in the auditorium, the 118-A Amplifier gain control is correctly adjusted, and there will be no danger of the TA-7467-A driving amplifier overloading before full power output of the 118-A Amplifier is reached.

ASSOCIATED DRAWINGS AND BULLETINS

LSS-7526	M-17 System, Connection Diagram
E. B.	SE-7520 Power Unit
RSE-2622	SE-7520 Power Unit, Wiring Diagram & Schematic
SE-7018	SE-7018 Network, " " " "
WE-7500	SE-7512 Switching Panel " " " "
E. B.	TA-7466 Type Amplifier
WE-7539	PA-7001 (TA-7466-A) Amplifier, Schematic
WE-7540	TA-7467-A Amplifier, Wiring Diagram
E. B.	TA-7467 Type Amplifier
WE-7537	TA-7467-A Amplifier, Schematic
WE-7538	" " , Wiring Diagram
E. B.	118-A Amplifier
E. B.	SE-7522 Loudspeaker System
PA-7025	PA-7015 C. C. & 7016 Aux. Controls

1. PA-7015 Preamplifier Cabinet - Locate on the projection room front wall between the projectors so that the PA-7016 Extension Control Rods will clear port holes and other obstructions. Have the cabinet as close as possible to the left projector, and at a convenient height, so that control knobs may be easily reached from its operation position. Cast stop lugs are provided for both control shafts; these go on the rods inside the cabinet with the 5/16" flat washers between lugs and cabinet side wall. Stop studs for the lugs have eccentric bushings; adjust these bushings, and the lug positions on the shafts so that parts inside the changeover switch and volume control are relieved of all stopping strain. After the system is operating, check the action of the detent spring on the changeover switch shaft lug; the relation between the spring and lug should be such as to insure that a positive OFF position is obtained midway between the R (right), and L (left) positions.

1.1 Belden #8401 Coaxial Cable - Length between the output ("core" and "SH") terminals of the SE-7500 Reproducers and the input terminals of the PA-7505-A Amplifier is 12 feet, and the system frequency response curves and correction factors given in the amplifier equipment bulletin are based upon the use of cables of this length. It is an average length which experience indicates will be satisfactory in the majority of installations. Any excess length may be coiled and stored in the bottom of the PA-7015 Cabinet.

1.11 Where it is desired to bring all projector wiring up through pedestal bases, the 12 foot cable length will probably be insufficient in some instances. Longer input cables can be accommodated, however, by suitably modifying the amplifier frequency response to compensate for the increased H. F. loss occasioned by the added cable capacity. In general, satisfactory system frequency response can be obtained in this manner with input cables up to about 25 feet long.

1.12 The cables from both reproducers to preamplifier must obviously be of the same length to prevent differences in frequency response between reproducers. If for some reason they cannot be made physically equal in length, the same electrical effect can be obtained by padding the shorter cable with small condensers on the basis of a cable capacity of 30 micro-micro-farads per foot (for example, a .0001 mf. condenser is equal in effect to a little over 3 feet of cable).

2. Amplifier Rack location should be such as to insure adequate amplifier ventilation, convenient access to monitor volume controls and amplifier switching panel, and good visibility of amplifier plate current meters. Although the amplifiers are well shielded, it is always a wise precaution to have them as far as possible from other projection room power equipment. The rack should be at least 18" from the projection room wall so as to provide easy access to switching panel connections. Conduits may be brought to the top of the rack as shown, using the connection trough provided, or for concealed conduit installations, they may enter the rack from the bottom. The clearance opening at the bottom of the rack is approximately 3" x 18". Conduits bringing 115 V.A.C. to the amplifiers should, if possible be connected directly to the amplifier cabinets in order to separate these power circuits from the sound system circuits. It is desirable to mount the amplifier cabinets near the top of the rack, as shown, so the amplifiers will be at a convenient height for operation and maintenance.

3. SE-7520 Power Unit - Locate in the projection room or in a separate enclosure if local regulations require it. The location must have adequate ventilation to carry off heat developed in the power unit. Where the power unit is located in the projection room it is desirable to have at least a four foot separation between it and the amplifier rack in order to reduce the possibility of inductive interference with amplifier circuits.

4. SE-7501 Monitor Speaker - Suspend by its connection conduit from the projection room ceiling approximately seven feet above the floor slightly to the left of the left projector, and in line with the space between projector mechanism and lamphouse.

4.1 (M-911 Dual only) - The braided shielding of the KS-7133 Cordage extending from the switching panel to the monitor should not be connected to the monitor frame at the monitor end of the run in order to prevent a loop ground circuit through the enclosing conduit. It should be insulated with friction tape at the point where the cordage conductors are spliced to the monitor speaker leads. This is based on the assumption that the connection conduit provides good grounding for the monitor speaker enclosure. If it does not, and if instability at high monitor volume control settings is experienced, a connection between the shielding and the enclosure may prove helpful in some instances. The shielding should be grounded at the switching panel end as called for on the system connection diagram.

4.2 The complete loudspeaker unit (including input transformer) is Part # SE-7002. The transformer has a primary impedance of 5000 ohms, and its separate Part #. is SE-7013. The cone and voice coil alone may be ordered as "SA-2088-14 Cone and Voice Coil Assembly for SE-7002 Loudspeaker Unit."

5. Power Circuits - In addition to the sound system conduit specified in drawing XSS-7535, separately fused 115 volt, 60 cycle, power circuits are required at each projector pedestal for the reproducer driving motor. The A.C. circuits to the amplifiers should be provided with suitable switches, at the panel board or in the line, since the switches on the amplifier chassis are intended for use only during amplifier servicing. Motor circuits should be fused at 15 amperes, or with Fusetrons of the correct rating for 1/6 HP motors. Amplifier and power unit circuits need be fused only for wiring protection (15 amperes), since protective fuses are provided inside the units. All power circuits must be at least #14 BRC except motor feed circuits, which should be not less than #12 BRC.

Issued by
Engineering Department
Printed in U. S. A.

6. Speaker System - Refer to Equipment Bulletin

ASSOCIATED DRAWINGS AND BULLETINS

M-9B System

LSS-7527	M-9B Sound System, Conduit Layout
LSS-7528	M-9B Sound System, Connection Diagram
E. B.	PA-7505-A and MA-7505-A Amplifiers
APA-2637	PA-7505-A Amplifier, Schematic
APA-2638	PA-7505-A Amplifier, Wiring Diagram
LMA-2650	MA-7505-A Amplifier, Schematic
LMA-2649	MA-7505-A Amplifier, Wiring Diagram
LSS-7540	7505-A Type Amplifiers, Equalization Curves
E. B.	SE-7520 Power Unit
RSE-2622	SE-7520 Power Unit, Schematic and Wiring Diagram
E. B.	SE-7508 Loudspeaker System
ASE-7038	SE-7038 Network, Schematic and Wiring Diagram
LPA-7025	PA-7015 C. C. & PA-7016 Aux. Controls

M-911 System
(Substitutions and/or Additions)

LSS-7531	M-911 Sound System, Conduit Layout
LSS-7532	M-911 Sound System, Connection Diagram
E. B.	SE-7511 Loudspeaker System

M-911 Dual System
(Substitutions and/or Additions)

XSS-7535	M-911 Dual Sound System, Conduit Layout and Connection Diagram
WE-7500	SE-7512 (TA-7478) Switching Panel, Schematic and Wiring Diagram
E. B.	SE-7522 Loudspeaker System
ASE-7018	SE-7018 Network, Schematic and Wiring Diagram

Issued by
Engineering Department
Printed in U. S. A.

1. GENERAL

This equipment was designed to reproduce single channel magnetic sound from a four track CinemaScope film or the Magoptical type of print. It consists of two AAA-1 Penthouse Reproducers, a two tube Preamplifier, a Power Supply and a Changeover Device to change from one reproducer to the other.

The preamplifier will develop approximately 2 volts from a magnetic track and when connected to a suitable entrance point of the regular optical amplifier system, magnetic reproduction of the number two track becomes available with a minimum of new equipment. This is not a "mixer" system but uses only the number 2 track as per Twentieth Century-Fox's recommendation. Each pickup head has only one active track. The other three function only to properly support the film at the sound takeoff point.

If in the future it is desired to convert the magnetic reproducers for a 3 or 4 channel stereophonic system, it will be necessary to replace these pickup heads with the type having four active tracks.

Due to the much wider dynamic or volume range recorded on magnetic film it will often be necessary for the operator to reduce the volume during a musical number to prevent overloading of the optical power amplifier. This will be due in most cases to the power limitations of these amplifiers as they were not designed to deliver this amount of power without overload distortion. Most stereophonic power amplifiers have enough reserve power to deliver such peaks without distortion.

2. INSTALLATION AND OPERATION

A normal installation of this equipment places the preamplifier between the two machines and over the number one preamplifier or in the case of a Motiograph System, over the PA-7505A preamplifier.

The power supply cabinet should be located at least six feet from the preamplifier and it is very important that no other transformers or hum producing equipment be mounted near the preamplifier. Due to its high amplification, it is possible that such devices will introduce hum into the system.

Motiograph Drawing RSE-7665 gives the amplifier schematic including the Changeover details. A high frequency equalizing control is provided to compensate for the normal high frequency droop in the overall optical system. Low frequency response is controlled or determined by the .01 mfd condenser in the feedback circuit and its shunt resistor. The amplifier is shipped with a 330,000 ohm resistor across this condenser. Replacing this resistor with a 220,000 ohm resistor will lower the 100 cycle response approximately one db. With no resistor in the circuit the 100 cycle response will be increased approximately two db. It is very important that the low frequency end of the curve is not boosted above the 1000 cycle level in order to get best dialog reproduction and to reduce the possibility of low frequency overload distortion.

The overall system response using the SMPTE frequency reel, as recommended by Twentieth Century-Fox, should be flat from 50 to 8000 cycles with tolerances as shown below.

50 cycles	100	2000	5000	8000
Plus 0	Plus 0	Plus 1	Plus 2	Plus 3
Minus 2	Minus 1	Minus 1	Minus 2	Minus 3

The output of the preamplifier is high impedance and intended to work into high impedance preamplifiers such as the Motiograph PA-7505A. A suitable matching transformer and "magnetic-optical" switch will be required with low impedance preamplifiers. Neither of these items are supplied with the ST-20 Kit. When the PA-7505A preamplifier is used, the installation is simplified as the output of the magnetic preamplifier is connected to the center position of the PA-7505A changeover switch.

The gain control on the magnetic amplifier is adjusted to a point where the magnetic and optical sound requires approximately the same setting of the optical preamplifier gain control which will be used to control the level of both magnetic and optical sound. The same system should be used with other types of equipment. When two optical preamplifiers are used, the magnetic sound will always feed into the same one and its gain control used for controlling the level of the magnetic sound. This may be a slight disadvantage where a separate volume control is provided for each preamplifier.

The changeover switch includes muting contacts which short the preamplifier output during the changeover cycle. Sound changeovers are made by placing a short circuit across the outgoing head and removing a short from the incoming head.

Issued by
Engineering Department
Printed in U. S. A.

When the equipment is ordered for use with a Motiograph system, the SE-7668 power supply is furnished. This unit takes all of its power from the PA-7505A preamplifier, resulting in a simpler installation as no 117 volt line connection is required.

The SE-7669 power supply is furnished for use with other systems and is of conventional design. In all cases, filtered direct current is used on the tube filaments.

The AAA-1 reproducers include balancing potentiometers which are normally adjusted for maximum output. If one reproducer delivers more output than the other, it should be reduced by operating this control in the counter-clockwise direction. No plug-in connection is provided for the pickup head as only three wires are involved and present no soldering or phasing problems.

The AAA-1 reproducer is identical to the standard AAA with the following exceptions:

The RX-11840 pickup head assembly replaces the RX-11830
The RX-11837 terminal panel assembly replaces the RX-11828

ASSOCIATED DRAWINGS

APA-2637	PA-7505A Schematic (5032.09)
RSE-7665	SE-7665 Pre-Amplifier (5034.85)
ASE-7668	SE-7668 Power Supply (5313.21)
ASE-7669	SE-7669 Power Supply (5313.22)
RSS-7606	ST-20 System Schematic (5385.73)
	AAA Magnetic Reproducer (5351.41-.54)

Issued by
Engineering Department
Printed in U. S. A.

RSS-7606

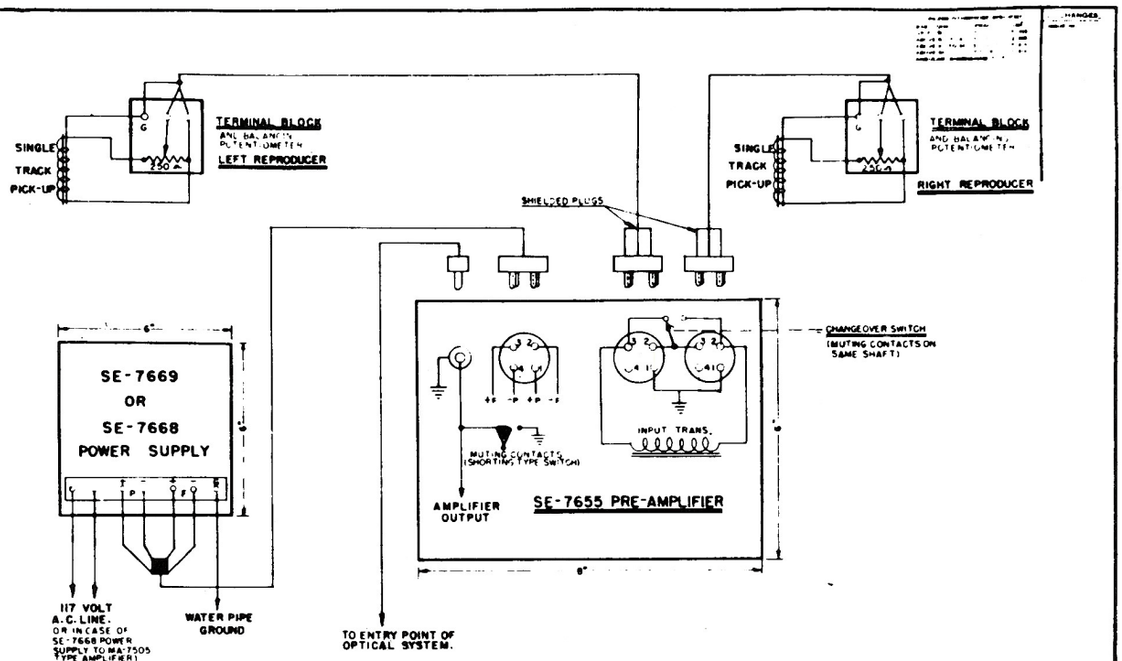

NOTES:

1. ALL PLUG-IN CABLES ARE SUPPLIED
2. MATCHING TRANSFORMER WILL BE REQUIRED FOR SYSTEMS NOT HAVING HIGH IMPEDANCE INPUT.
3. POWER SUPPLY MUST BE LOCATED SIX TO EIGHT FEET FROM AMPLIFIER
4. AMPLIFIER SHOULD BE MOUNTED BETWEEN MACHINES AND OVER THE OPTICAL PRE-AMPLIFIER
5. SHIELDED CABLES TO REPRODUCERS SHOULD BE AS SHORT AS POSSIBLE.

DO NOT SCALE DRAWING

TITLE: SCHEMATIC ST-20 KIT

DRAWN: HUCK | DATE: 11-12-58

DRWG NO. RSS-7606

MOTIOGRAPH INC. CHICAGO U.S.A.

ALTEC SERVICE COMPANY

ST-20 AMPLIFIER SYSTEM

5385.73

Printed in U.S.A.

6/11/56

ALTEC SERVICE CORPORATION

SIMPLEX

EQUIPMENT BULLETIN — INDEX

FILE	EQUIPMENT	ISSUE
	AMPLIFIERS	
40.03	AM-101 Vol. Control (AM-1000 Ampl.)	1
	Addendum #1 (with 2 AM-1000 Ampl.)	1
	WD-100	6
	WD-108	12
	WD-106	2
	AM-101 Ampl. Ground Isolation	1
	AM-1000 Ampl. Insulating Mounting Bracket for SN-541 Potentiometer	1
	AM-2256 Ampl. Modification Kit	1
	AM-2259 Conversion Kit (AM-1000 Ampl. Equipment Instructions)	1
	AM-141 Vol. Cont. (AM-1010 Ampl.)	2
	WD-158	2
	AR-2170 (Mod. for Noise Reduction)	1
	AM-142 (AM-1011)	2
	WD-159	5
	AM-145 Pre-Amplifier Special	1
	WD-160	3
	AM-147 Ampl. Monitor Speaker	
	WD-164	1
	AM-148 Ampl. Special	1
	WD-167	1
	AM-169, AM-169-X (AM-1014) Vol.Cont.	1
	WD-208	1
	WD-209	1
	AM-170 (AM-1015) N.S.	1
	WD-210	1
	WD-211	1
	AM-1001 Power Amplifier	2
	WD-101	6
	WD-113	7
	WD-177 (AM-1001 - Special)	1
	WD-178 (AM-1001 - Special)	1

FILE	EQUIPMENT	ISSUE
	AMPLIFIERS	
40.03	AM-1003 Monitor Amplifier	1
	WD-141	3
	AM-1009 Amp. - Filter	1
	WD-166	3
	AM-1020 Power Amplifier	
	IC-2066	2
	WD-1022	3
	AM-1025 Power Amplifier	1
	4179	2A
	AM-1026 (Blowing of fuses)	1
	WD-1085	2
	WE-1094	3
	AM-1027 20 W.	
	WD-1086	2
	WE-1092	2
	AM-1028 Pre-Amplifier	
	WC-1089	1
	WC-1090	1
	AM-1029 Monitor Amplifier	
	WC-1087	1
	WC-1093	1
	AM-1040 (Simplex AM-1018, A.L. 287-W) Temporary Instruction	1
	NTS-1125 (Mod. Bogen HO-125)	1
	NS-128	3

Issued by
Engineering Department
Printed in U. S. A.

September 30, 1954
Issue #6

ALTEC SERVICE CORPORATION

SIMPLEX

INDEX — EQUIPMENT BULLETIN

FILE	EQUIPMENT	ISSUE
	CABINETS	
40.15	AM-149 and 165 Switch Cab. Special	2
	AM-197 Changeover Cabinet	
	WD-1098	1
	AM-1032 Cabinet Kit	
	GB-1920	3
	AM-1033 Cabinet Kit	
	WC-1099	2
	GC-1921	2
	AM-1035 N.S. Cabinet	
	WC-1101	1
	WD-1102	1
	AM-1038 Cabinet Kit	
	WC-1103	2
	GC-2174	2
	AM-1039 Cabinet Kit	
	WC-1104	2
	GD-2175	1
	LU-3001 Loudspeaker Control Cabinet	2
	WE-1023	9
	NTS-69 Monitor Vol. Control Cabinet	
	NS-122	1
	NTS-70 Monitor Vol. Ampl.Selector Cab.	
	NS-123	1
	NTS-76 Vol. Cont. Ampl. Selector Cab.	
	NS-124	1
	NTS-78 Ampl. Selector Cabinet	
	NS-125	1

FILE	EQUIPMENT	ISSUE
	CABINETS	
40.15	NTS-81 Ramp Control Cabinet	
	NS-159	1
	CABLE	
40.16	SH-2100 Coaxial Cable Assembly	1
	SH-2103 Coaxial Cable	2
	8401 Belden Microphone Cable	1
	TEST FILM	
40.20	AP-17-1 Test Film	1
	NETWORKS	
40.21	Networks, General	1
	WD-116 - LU-1002	5
	WD-117 - LU-1003	3
	WD-200 - LU-1003-X	3
	WD-124 - LU-1026	1
	LU-1047 Network	2
	LU-1084 Network, Equipt. Instr.	1
	WD-1012	6
	HORNS	
40.22	H. F. Horns	1
	SPEAKERS	
40.22	LU-1018 Monitor Unit	1
	LU-1024 Monitor Loudspeaker	1
	LU-1039 Wings - Dwg. WD-135	2
	LU-1040 Wings - WD-133	2
	LU-1041 Wings - WD-130	4
	LU-1042 Wings - WD-134	3
	LU-1103 Speaker Network - Dwg. WC-1095	3
	WD-1096	2
	In-A-Car Speakers	1
	In Car Speaker - Vol. Controls	1
	Speaker Equipment - XL - Parts List	1
	Cry Room Attachment (Speaker)	1

ALTEC SERVICE CORPORATION

SIMPLEX

EQUIPMENT BULLETIN — INDEX

FILE	EQUIPMENT	ISSUE
	PANELS	
40.27	LU-3017 Ramp Switching Panel	
	AS-2189	1
	IB-2224	1
	LU-3018 Ramp Switching Panel	
	AS-2190	2
	IB-2225	1
	POWER UNITS	
40.31	PU-1000 Power Unit	1
	Addendum #1 - Type "E" System	1
	WD-123	3
	PU-1001 Power Unit (Special)	2
	WD-182	1
	PU-1003 Power Unit	2
	WD-140	1
	PU-1005 Power Unit	1
	PU-1009, PU-1010 Power Unit	
	WC-1088	2
	WD-1091	3
	REPRODUCER SETS	
40.35	SH-1000 - SH-1001	1
	AP-2044 - Pressure Measurements	1
	SH-1007 - SH-1008 Sound Heads	
	WC-1097	3
	SH-1012 - SH-1013 Sound Heads	
	WC-1100	3
	Lubrication Chart	2
	Addendum #1	1
	SH-106 Push-Pull Kit	1
	Addendum #1	1
	SH-2066 Coupling Unit	1
	SH-2066	1
	Take-Ups	1

FILE	EQUIPMENT	ISSUE
	REPRODUCER SETS	
40.35	Modernization, Replacement of	
	W.E. Sound Heads	1
	WD-161	1
40.384	ATTACHMENTS	
	AM-2069 N.S. - Ann. Switching	
	Attachment	1
	Addendum #1	1
40.385	SYSTEMS	
	Equipment List for X-L Systems	1
	Equipment List for Standard Systems	1
	Systems - Magnetic/Stereophonic	1
	System Operation	1
	Tuning Up	1
	Emergency Operation - A-15	1
	A-30	1
	B-30	1
	B-60	1
	C-60	1
	Drive-In Theatre Systems	1
	XL Single Film Magnetic, Series XL-101	1
	XL Single Film Magnetic, Series XL-200	1
	XL-432 & XL-436 Single Film	1
	Addendum #1	1
	MODIFICATION PARTS - NOISE REDUCTION	
40.386	Pickup Elimination Parts -	
	AM-2168, AM-2169, AM-2170, AM-2171	2
	AM-2173 - Pickup Elimination "E" Sys.	1
	AM-2174, AM-2175 and AM-2176	1

Issued by
Engineering Department
Printed in U. S. A.

September 30, 1954
Issue #6

FILE	EQUIPMENT	ISSUE
	SWITCHES	
40.41	Changeover - Sound, Exciter Lamp WD-109	1
	Changeover - Composite Schematic of AM-1000 Vol. Cont. Ampls. and Changeover Switches - AR-1125	1
	Changeover Switch, AP-1992	1
	AM-2013 Switch	1
	WD-111	8
	AM-2047 Switch	
	WD-129	2
	AM-2049 Switch	1
	WD-110	3
	AM-2053 Switch	
	WD-122	1
	AM-2102 Switch (Special)	1
	WD-169	1
	AM-2122 Switch (Special)	1
	WD-170	2
	AM-2197 Switch	1
	WC-1021	2
	LU-1022-1044-1063 L.S. Testing	1
	WD-131	1
	WD-143	1
	WD-168	1
	SN-1087 Switch	1

FILE	EQUIPMENT	ISSUE
	TESTING PROCEDURES	
40.64	Freq. Resp. Char. - AM-1001 Ampl. SC-21	
	Freq. Resp. Char. with AM-141 Vol. Cont. Ampl. amd AM-142 Ampl. Equipment SC-43	2
	Freq. Resp. Char. with AM-145 Pre-Ampl. Equipment SC-46	1
	Voltage - Current Test Data: Impedances; Transformer and Reactor Resistances	2

Attached herewith is a set of schematic and wiring diagrams of the components of the new Simplex X-L Sound Systems, as well as an equipment list and a chart showing the speaker combinations for these systems. The material included is as follows:

FILE	DRAWING		
40.15	GB-1920	AM-1032 Cabinet Kit	Wiring
	WC-1099	AM-1033 Cabinet Kit	Schematic
	GC-1921	"	Wiring
	WC-1103	AM-1038 Cabinet Kit	Schematic
	GC-2174	"	Wiring
	WC-1104	AM-1039 Cabinet Kit	Schematic
	GD-2175	"	Wiring
40.03	WD-1085	AM-1026 Amplifier	Schematic
	WE-1094	"	Wiring
	WD-1086	AM-1027 Amplifier	Schematic
	WE-1092	"	Wiring
	WC-1087	AM-1029 Monitor Amplifier	Schematic
	WC-1093	"	Wiring
40.31	WC-1088	PU-1009, PU-1010 Power Unit	Schematic
	WD-1091	"	Wiring
40.03	WC-1089	AM-1028 Pre-Amplifier	Schematic
	WC-1090	"	Wiring
40.22	WC-1095	LU-1103 Network	Schematic
	WD-1096	"	Wiring
40.35	WC-1097	SH-1007, SH-1008 Sound Heads	Schematic and Wiring
	WC-1100	SH-1012, SH-1013 Sound Heads	Schematic and Wiring
40.15	WC-1101	AM-1035 N.S. Cabinet	Schematic
	WD-1102	"	Wiring
40.27	AS-2189	LU-3017 Ramp Switching Panel	Wiring
	AS-2190	LU-3018 Ramp Switching Panel	Wiring
40.15	WC-1098	AM-197 Changeover Cabinet	Schematic and Wiring

These bulletins should be separated and filed in your Simplex bulletin binder under the file number as shown in the upper right hand corner of the bulletin.

Issued by
Engineering Department
Printed in U. S. A.

1. DESCRIPTION

The AM-101 Unit is a wall mounted cabinet 12-1/2" high x 9" wide x 6-1/2" deep, weighing 9 lbs. It normally contains one AM-1000 Volume Control Amplifier, a sound and exciter lamp changeover switch and a pilot lamp. (See Addendum #1 for AM-101 equipped with two AM-1000 Amplifiers.) The cabinet is surface mounted for exposed conduit installation, and may be partially recessed in the wall when conduit is concealed.

A. Characteristics - AM-1000 type Amplifier.
Type - Chassis type - two stage, resistance coupled, inverse feedback.
Gain - Maximum 46 db.
Input Impedance - 250,000 ohms (where dual AM-1000 Amps. installed, impedance is 150,000 ohms).
Output Impedance- 10,000 ohms.
Gain Control - Potentiometer - 20 steps, 2 db each.
P.E.C. Control - R_3 adjustable resistor with range of 6 db, in cathode of first tube for equalization of P. E. C. output.
Vacuum Tubes - One 1620 in first stage and one 6J7 in second stage.
Power Supply - Plate and filament supply obtained from AM-1001 Amplifier and voltage divider in AM-1000 provides P. E. C. polarizing potential.
Accessories - AM-2019 Terminal Strip on external cable, which provides for external connections and also includes "On", "Off" switch for cutting out amplifier.
Associated Dwgs.- WD-100 Schematic
WD-108 Wiring
WD-109 and AR-1125 Changeover Switch Schematic

B. Changeover is made at either machine by operating the changeover switch on the front of either cabinet, sound and exciter lamp being transferred at the same time. An electronic type of sound changeover incorporating a three-way circuit is employed. In the "ON" amplifier the second tube has normal bias, whereas in the "OFF" amplifier the bias of this tube is increased beyond cut-off and the amplifier is inoperative. There is no switching in the sound circuit, and the changeover is instantaneous and noiseless. The exciter lamp changeover provides for preheating of the standby lamp on AC. The pilot lamp indicates the machine in use.

2. INSTALLATION

The AM-101 Amplifier Unit should be mounted as shown in system conduit layouts. Since a fixed length of SH-2100 Coaxial Cable is shipped with the system for coupling between the PEC output and AM-101 input, this amplifier should be so located that the coaxial cable can be properly installed and connected. The connections to the terminal strips should be made per the system wiring diagram.

NOTE: All wires connected to terminals in the cabinet should run below the terminal strips AND NOT ABOVE, to avoid possible interference between these wires and the AM-1000 chassis.

The microphone cable, connected to the output terminal, should be securely fastened, by means of cord through tie cord holes in the terminal strip, in such a manner that there is no strain on the conductor.

A. Equalization of PEC Outputs. The resistor R_3 should be adjusted so that the output of all volume control amplifiers is the same, with the same setting of the main volume control. This resistor should be adjusted after all adjustments have been made in the sound mechanism, and when carefully made will accurately equalize outputs.

B. Volume Control. In establishing normal operating level initially for a specific auditorium, set the volume control on step 9, run a standard recording, such as the Academy Test Reel, and adjust the gain control in the power amplifier as required to obtain adequate volume level in the auditorium.

3. OPERATION

Set the switch on the terminal strip of the amplifier in "ON" position and the changeover switch so that the projector being threaded is inoperative (pilot lamp is out). Changeover is then made, when the in-coming machine is up to speed, by operating the changeover switch on either cabinet.

4. MAINTENANCE

A. Vacuum Tubes. The prongs should make good contact and should be clean and bright.

B. Capacitors. Check all clamping rings and nuts periodically, and tighten if necessary.

C. Pilot Lamp. If the pilot lamp does not light check the fuse mounted on the terminal strip mounting bracket, as removal of the exciter lamp while the power unit is in operation may cause the fuse to blow. Otherwise the pilot lamp should be replaced by removing the socket from the inside of the cabinet. A flickering pilot lamp indicates a defective tungar bulb in the exciter lamp power unit.

1. INSTALLATION

When 2 AM-1000 Amplifiers are installed in the AM-101 Volume Control Cabinet, proceed as follows:

A. Modifications. IN THE SECOND AMPLIFIER in each cabinet disconnect R_1 from C_1, and tape the lead. This change should not be made in the first amplifier in the cabinet. The second amplifier is the one which projects out beyond the cover as shown in Fig. 1 and is shown as Amplifier #2. (See Dwg. WD-108 regarding other circuit changes which may be necessary.)

B. The Installation Procedure for the second amplifier (modified per A above) is as follows: (See Figure 1 below.)

(1) Install fibre washer (required to avoid grounding) and AM-2029 Coupling on potentiometer shaft of first amplifier.
(2) On second amplifier remove potentiometer from bracket. Do not disconnect wires. Reverse mounting bracket to provide space for the AM-2029 Coupling, and remount potentiometer.
(3) Attach second amplifier to first, using four #8-32 x 3/8 R.H.I.M.S., Nuts and lockwashers supplied.
(4) Line up second potentiometer with first. A slotted hole is provided in the bracket for this purpose. Tighten coupling set screw and the potentiometer locknut.
(5) Mount the second amplifier terminal strip below the first (See Figure 2) using two #8-32 x 3/8 R.H.I.M.S., nuts and lockwashers supplied.
(6) Form the second amplifier cable toward the cabinet cover so that it clears the terminal strip when the cover is closed. Adjust the cable clamp as required.
(7) Like terminals on the two AM-1000 should be strapped together per Figure 2. The input should be strapped by connecting a wire between the lower terminals of C_1 in each amplifier (See Figure 1).
(8) The two potentiometers are coupled together mechanically, so that the knob on the front of the cabinet controls the volume, irrespective of the AM-1000 in use.
(9) A terminal strip on an external cable form is provided for external connections. An "ON", "OFF" switch is provided on each terminal strip to disconnect an inoperative amplifier.

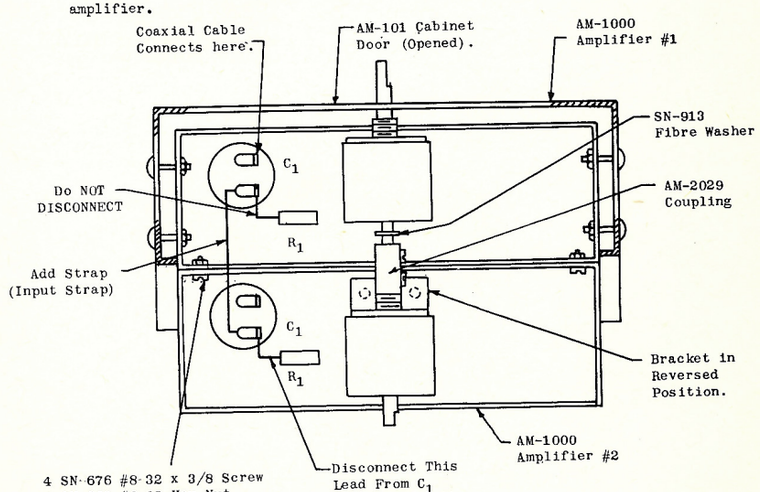

FIGURE 1

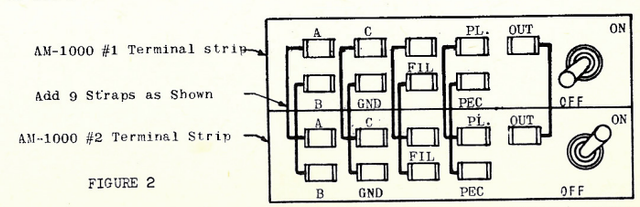

FIGURE 2

C. Equalization of PEC Outputs. Resistor R_3 in each AM-1000 should be adjusted so that the output of all volume control amplifiers is the same, with the same setting of the main volume control. This resistor should be adjusted after all adjustments have been made in the sound mechanism, and when carefully made will accurately equalize outputs.

2. OPERATION

A. Normal. Set the switch on the terminal strip of Amplifier #1 in "OFF" position, and the similar switch on Amplifier #2 in "ON" position. The second amplifier, which is slightly more accessible for tube replacements and servicing, is then the regular, and the first the standby amplifier. Set the changeover switch so that the projector being threaded is inoperative (pilot lamp is out) and make the changeover, when the in-coming machine is up to speed, by depressing the switch button on either cabinet.

B. Emergency. If the regular amplifier becomes inoperative in either cabinet:

(1) Set the volume control in that cabinet on step 1. This is important to prevent disturbances in the sound circuit when the switches are operated as described below.
(2) Set the switch on the regular amplifier in that cabinet in "OFF" position.
(3) Set the switch on the standby amplifier in that cabinet in "ON" position.
(4) Return the volume control to normal setting, and the system may be operated in the regular way.

3. ORDERING. A second amplifier for one cabinet should be ordered as:

1 AM-108 Amplifier Equipment consisting of:

1 AM-1000 Volume Control Amplifier
1 SN-707 Vacuum Tube (6J7)
1 SN-792 Vacuum Tube (#1620)

1 AM-2016 Mounting Parts, consisting of:
1 AM-2029 Coupling
1 SN-913 Fibre Washer
6 SN-676 Screw (8-32 x 3/8 R.H.I.)
8 SN-683 Nut (8-32)
8 SN-685 Lockwasher (#1108)
4 SN-169 Standard Washers

ALTEC SERVICE CORPORATION
SIMPLEX

AM-1000 AMPLIFIER

WD-100

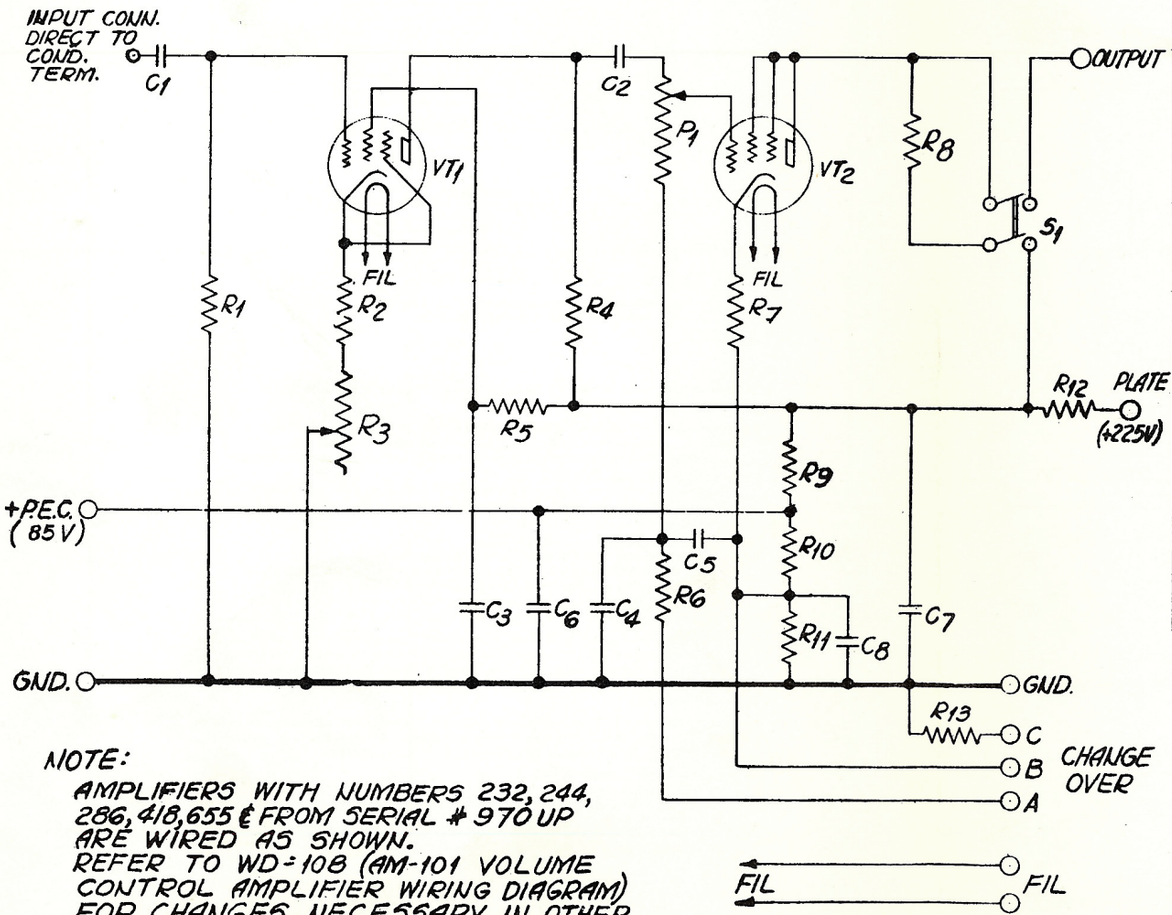

NOTE:
AMPLIFIERS WITH NUMBERS 232, 244, 286, 418, 655 & FROM SERIAL # 970 UP ARE WIRED AS SHOWN.
REFER TO WD-108 (AM-101 VOLUME CONTROL AMPLIFIER WIRING DIAGRAM) FOR CHANGES NECESSARY IN OTHER AMPLIFIERS, WHEN IMPROVED OPERATION IS DESIRED.

DESIG.	PART No.	APPARATUS
C1,C2,C3	SN-514	.05 MF-400 V CAP. AEROVOX TYPE 2EM
C4	"503	10 MF-50 V " " " EM
C5	"505	10 MF-" " " " 2EM WITH PAPER TUBE
C6,C7 C8	"506	8-8-10 MF AEROVOX TYPE 3E ~~8-8-10~~ 150-250-30
R1	"539	510,000Ω-1 WATT RES. I.R.C. TYPE BT-1
R2	"1129	4700Ω-1 WATT " " " WW
R3	1887	5,000Ω WIRE WOUND POT.
R4	"538	220,000Ω 1 WATT RES I.R.C. TYPE BT-1
R5	"517	2 MEG - " " " " BT-1
R6,R7	"530	6,200Ω - " " " " "
R8	"540	24,000Ω - " " " " "
R9	"522	68,000Ω-1 WATT " " " BT-1
R10	"523	56,000Ω- " " " " "
R11	"689	15,000Ω- " " " " "
R12	"527	24,000Ω- " " " " "
R13	"688	51,000Ω ½ WATT " " " BT-½
P1	"1889	500,000Ω 20-2 DB STEPS POT.
VT1	"792	6J7 METAL VT (6J7-B31 OR "1620)
VT2	"707	6J7 METAL VACUUM TUBE
S1	"608	D.P.S.T. SWITCH

ISSUE:-1 3-24-38
S1 WAS BETWEEN R12 & "PLATE" TERM. R4 & R5 WERE TO OTHER SIDE OF SWITCH. NOTE ADDED. R9 & R10 WERE 75,000Ω & 45,000Ω RESPECT.
DR. E.G.M. APP'D CFA
ISSUE:2 10-28-38
R9 & R10 WERE SHOWN AS SN-521 & 579 RESPECT.
DR. E.G.M. APP'D CFA
ISSUE:3 12-2-38
SN-1129 WAS SN-531 SN-538 WAS BT-½
DR APP'D CFA
ISSUE:4 6-5-40
R3 WAS "SN-532 5000Ω 10 WATT RBS I.R.C. TYPE AB-A," P1 - SN-1889 WAS SN-541, SN-517 WAS SN-537
DR. [illegible] E.G.M.
ISSUE:5 9-16-48
SN-539 WAS 500,000 Ω
SN-1129 WAS 5,000 Ω
SN-538 WAS 200,000 Ω
SN-530 WAS 6,000 Ω
SN-540 WAS 25,000 Ω
SN-522 WAS 70,000 Ω
SN-523 WAS 55,000 Ω
SN-527 WAS 25,000 Ω
SN-688 WAS 50,000 Ω
ARM OF R-3 WAS CONNECTED TO R-2 & REMAINED CONNECTION FROM R-3 TO GROUND
DR. [illegible] E.G.M.
ISSUE:6 - 7-20-49

ASSOCIATED ITEMS
AM-1000 AMPLIFIER
VOLUME CONTROL
SCHEMATIC

INTERNATIONAL PROJECTOR CORPORATION
90 GOLD STREET NEW YORK

DR. EGM CHK'D APP'D

WD-100

40.03
AM-101 AMPLIFIER

WD-108

ALTEC SERVICE CORPORATION
SIMPLEX

ISSUE
REDRAWN WITHOUT CHANGE
ISSUE 12 1-11-50

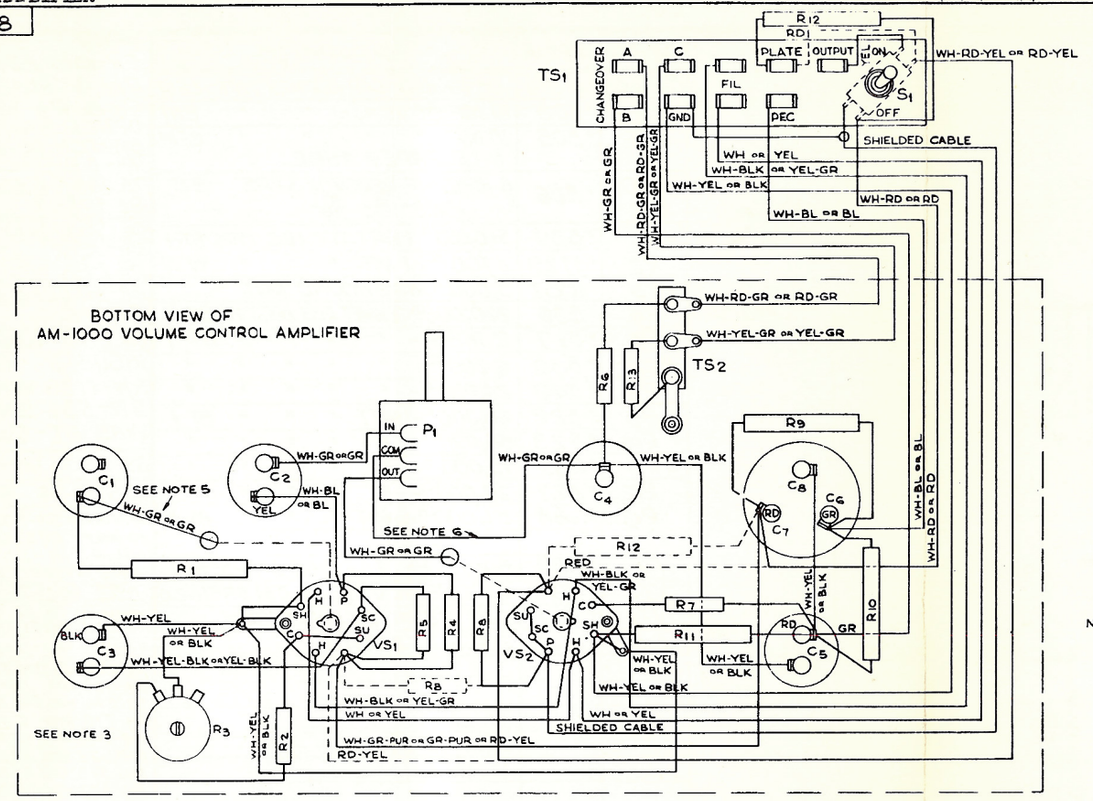

AM-1000 VOLUME CONTROL AMPLIFIER

DESIG.	PART NO	APPARATUS
C_1, C_2, C_3	SN-514	.05 MF-400 V CAPACITOR
C_4	" 503	10 MF- 50 V "
C_5	" 505	10 MF- " " WITH PAPER TUBE
C_6, C_7, C_8	" 506	8-8-10 MF CAPACITOR C_6 8, C_7 8, C_8 10
R_1	" 539	500,000Ω 1 WATT RES. I.R.C. TYPE BT-1
R_2	"1129	5,000Ω - 1 WATT " " " W-W
R_3	"1887	5,000Ω - WIRE WOUND " POT
R_4	" 538	200,000Ω 1 WATT RES. I.R.C. TYPE BT-1
R_5	" 517	2 MEG. - " " " " "
R_6, R_7	" 530	6,000Ω " " " " "
R_8	" 540	25,000Ω " " " " "
R_9	" 522	70,000Ω " " " " "
R_{10}	" 523	55,000Ω " " " " "
R_{11}	" 689	15,000Ω " " " " "
R_{12}	" 527	25,000Ω " " " " "
R_{13}	" 688	50,000Ω - ½ WATT " " " BT-½
P_1	"1889	500,000Ω 19-2 DB STEPS POT
TS_1	AM-2019	TERMINAL STRIP
TS_2	SN-611	TERMINAL STRIP
S_1	" 608	D.P.S.T. SWITCH (PART OF AM-2019 TERM STP)
VS_1, VS_2	" 561	SOCKET

AM-2034 CABINET

S_2	AM-2245	SWITCH
TS_3	AM-2018	TERMINAL STRIP
F_1	SN-881	FUSE - (½ AMP)
FM_1	" 737	FUSE MOUNTING
SKT_1	" 563	LAMP SOCKET
* LP_1	" 894	LAMP (9 VOLT - .2 AMP.)

* INDICATES NON-COMPONENT ITEM WHICH MUST BE ORDERED SEPARATELY

AM-2034 CABINET

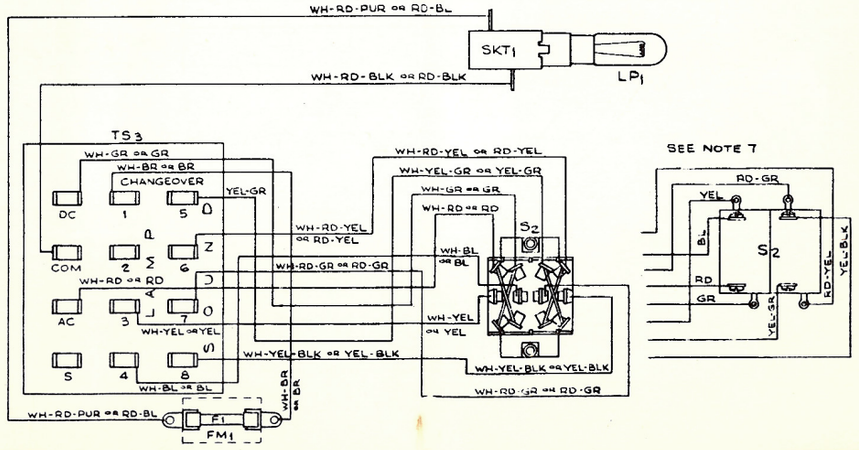

NOTES:—

1- AMPLIFIERS WITH NUMBERS 232, 244, 286, 418, 655 & FROM 970 UP ARE WIRED AS SHOWN.

2- WHEN AMPLIFIERS BELOW SERIAL NO. 541 ARE INSTALLED AS DUAL VOLUME CONTROL AMPLIFIERS, THE WIRING OF EACH SHOULD BE CHANGED, REMOVALS INDICATED BY DOTTED (– – –) LINES, AS FOLLOWS:—

A. SERIAL # 317 TO # 540
(1) DISCONNECT R_8 & RD-YEL WIRE (TO TS_1) FROM VS_1 & RECONNECT TO VS_2.
(2) RUN NEW GR-PUR WIRE FROM C_7 (RD. TERM) TO VS_1 (TERM. FROM WHICH R_8 WAS DISCONNECTED).

B. SERIAL NUMBERS BELOW # 317
(1) REMOVE R_{12} & RECONNECT ON TS_1 AS SHOWN.
(2) REMOVE RED WIRE FROM VS_2 & RECONNECT TO C_7 (RD. TERM.).
(3) DISCONNECT R_8 FROM VS_1 & RECONNECT TO VS_2.
(4) RUN NEW RD-YEL WIRE FROM VS_2 TO S_1.
(5) ON TS_1 REMOVE RED STRAP BETWEEN "PLATE" & S_1.

THE NEW RD-YEL WIRE MAY BE RUN INSIDE THE COTTON SLEEVING COVERING THE CABLE FORM OR ON THE OUTSIDE. TO RUN INSIDE, REMOVE THE WHIPPING AT EACH END, ADD THE WIRE & REWHIP. IF THE WIRE IS RUN OUTSIDE, IT SHOULD BE TIED AT INTERVALS & SO LOCATED THAT IT WILL NOT CHAFE.

3- ADJUST POTENTIOMETER R_3 (RANGE 6 DB) SO THAT OUTPUT OF EACH VOLUME CONTROL AMPLIFIER IS THE SAME WITH THE SAME SETTING OF THE VOLUME CONTROL (P_1). TO INCREASE THE GAIN, TURN CLOCKWISE.

4- VACUUM TUBES REQUIRED.
VS_1 - SN-792 VACUUM TUBE (6J7, 8-31 STOCK). SPECIALLY SELECTED TUBE DISTINGUISHED BY AN "X" ON THE BOTTOM OF THE TUBE.
VS_2 - SN-707 VACUUM TUBE (STANDARD 6J7). SOME TUBES MAY BE MARKED WITH AN "M" ON THE BOTTOM.

5- MADE UP AS SUB-ASS'BLY AM-2231 (6½" LONG).

6- MADE UP AS SUB-ASS'BLY AM-2232 (8½" LONG).

7- WIRING DIAGRAM OF AM-2065 (REPLACED BY AM-2245).

SCALE

AM-101
VOL. CONTROL AMPLIFIER
WIRING DIAGRAM
INTERNATIONAL PROJECTOR CORPORATION
85 LA FRANCE AVENUE
BLOOMFIELD NEW JERSEY
DR SAJR CHK APP'D

PRODUCT CLASS

WD-108

Printed in U.S.A.

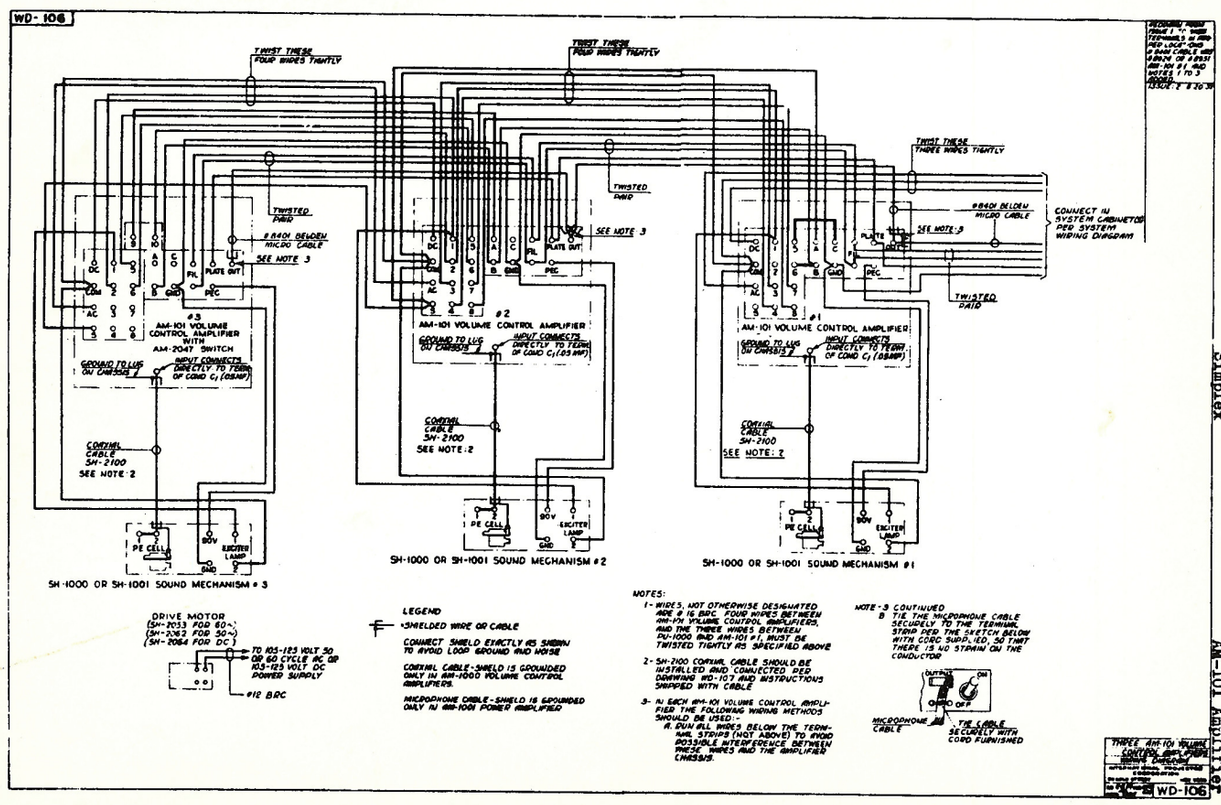
WD-106
TWIST THESE FOUR WIRES TIGHTLY
TWISTED PAIR
#8401 BELDEN MICRO CABLE
SEE NOTE 3
#3
AM-101 VOLUME CONTROL AMPLIFIER WITH AM-2047 SWITCH
GROUND TO LUG ON CHASSIS
INPUT CONNECTS DIRECTLY TO TERM OF COND C1 (.05 MF)
CONTROL CABLE SH-2100
SEE NOTE 2
PE CELL
EXCITER LAMP
SH-1000 OR SH-1001 SOUND MECHANISM #3
#2
AM-101 VOLUME CONTROL AMPLIFIER
SH-1000 OR SH-1001 SOUND MECHANISM #2
#1
AM-101 VOLUME CONTROL AMPLIFIER
SH-1000 OR SH-1001 SOUND MECHANISM #1
TWIST THESE THREE WIRES TIGHTLY
CONNECT TO SYSTEM CABINETS PER SYSTEM WIRING DIAGRAM
DRIVE MOTOR
(SH-2033 FOR 60~)
(SH-2062 FOR 50~)
(SH-2084 FOR DC)
TO 105-125 VOLT 50 OR 60 CYCLE AC OR 105-125 VOLT DC POWER SUPPLY
#12 B.&C.
LEGEND
SHIELDED WIRE OR CABLE
CONNECT SHIELD EXACTLY AS SHOWN TO AVOID LOOP GROUND AND NOISE
COAXIAL CABLE - SHIELD IS GROUNDED ONLY IN SH-1000 VOLUME CONTROL AMPLIFIERS.
MICROPHONE CABLE - SHIELD IS GROUNDED ONLY IN SH-1001 POWER AMPLIFIER
NOTES:
1 - WIRES, NOT OTHERWISE DESIGNATED ARE # 16 B&C. FOUR WIRES BETWEEN AM-VM VOLUME CONTROL AMPLIFIERS, AND THE THREE WIRES BETWEEN PU-1000 AND AM-101 #1, MUST BE TWISTED TIGHTLY AS SPECIFIED ABOVE
2 - SH-2100 COAXIAL CABLE SHOULD BE INSTALLED AND CONNECTED PER DRAWING WD-107 AND INSTRUCTIONS SHIPPED WITH CABLE
3 - IN EACH AM-101 VOLUME CONTROL AMPLIFIER THE FOLLOWING WIRING METHODS SHOULD BE USED:-
A. RUN ALL WIRES BELOW THE TERMINAL STRIPS (NOT ABOVE) TO AVOID POSSIBLE INTERFERENCE BETWEEN THESE WIRES AND THE AMPLIFIER CHASSIS.
NOTE-3 CONTINUED
B. TIE THE MICROPHONE CABLE SECURELY TO THE TERMINAL STRIP PER THE SKETCH BELOW WITH CORC SUPP. NO. 30 THAT THERE IS NO STRAIN ON THE CONDUCTOR
OUTPUT ON
COND OFF
MICROPHONE CABLE
TIE CABLE SECURELY WITH CORD FURNISHED
THREE AM-101 VOLUME CONTROL AMPLIFIER SOUND SYSTEM WIRING DIAGRAM
WD-106

WD-106

1. HUM REDUCTION - Due to the fact that the associated sound system is also grounded to the front wall conduit through the chassis of the AM-1000 Amplifiers, hums may be experienced if the house wiring is defective due to this ground loop. This hum may appear to be of an intermittent nature, depending on whether or not, the lights on the defective circuit are turned on or off.

2. MODIFICATION

2.1 The above condition may be eliminated by electrically insulating the AM-1000 Amplifiers from the AM-101 Cabinet.

2.2 Material required for each AM-101 Amplifier.

4 - Extruded insulating washers

Outside diam. of washer	3/8"
Diam. of boss	.246"
Thickness of boss	1/16"
Diam. of hole	11/64"

2 - Sheets insulating fish paper, approx. 2-1/2" x 4"

3. PROCEDURE

3.1 Remove AM-1000 Amplifier from the AM-101 Cabinet.

3.2 Enlarge the four mounting holes of the AM-1000 Amplifier to 1/4" to accommodate the boss of the insulating washers.

3.3 Insert the fish paper between the amplifier chassis and cabinet. Using the same screws and insulating washers, remount the amplifier.

3.4 It may be necessary to file the end of the 1/2" fitting on the greenfield containing the coaxial cable. Sometimes the end of this fitting will extend far enough beyond the cabinet to touch the amplifier chassis, thus causing a ground.

3.5 When the cabinet is closed, the chassis may touch the flange on the cabinet. Using a hacksaw and a pair of pliers, remove enough of this flange to safely clear the amplifier chassis.

3.6 Remove the safety stud from the door of the SH-1000 Sound Units. When or if, this stud touches the guide roller assembly, the amplifier chassis will effectively be grounded.

3.7 Remove the ground wire from the respective AM-1000 Amplifiers and using ohmmeter check to see if chassis is free from ground. If free from ground, restore ground wires and test for sound.

4. It is desirable that the above modification be made on all new installations and on all existing installations where trouble may be suspected.

ALTEC SERVICE CORPORATION
SIMPLEX
SOUND EQUIPMENT BULLETIN

AM-1000 AMPLIFIER
INSULATING MOUNTING BRACKET
FOR SN-541 POTENTIOMETER

1. NOISE REDUCTION

1.1 Several cases of noises and "plops" in the AM-1000 Amplifier have been traced to the SN-541 Potentiometers. Further investigation of this trouble indicated that the shafts of these potentiometers were intermittently grounded to the mounting bracket.

2. MODIFICATION

2.1 The AM-2260 Mounting Bracket which consists of the standard bracket with an insulated mounting hole has been made available as a means of eliminating this grounded condition.

3. PROCEDURE

3.1 To install, merely remove SN-541 Potentiometer from present SN-543 Bracket without removing any wires and remount on the AM-2260 Bracket.

4. AVAILABILITY

4.1 This insulated mounting bracket is available on request and should be installed in those locations where noises and plops traced to the SN-541 Potentiometer are adversely affecting reproduction. These brackets are being furnished to Altec on a No Charge basis by International Projector Corporation and will be installed where needed on a similar basis.

5. MERCHANDISING

5.1 For each AM-1000 Amplifier involved, order:

1 - AM-2260 Mounting Bracket

Issued by
Engineering Department
Printed in U.S.A.

January 14, 1949
Issue #1

A. DESCRIPTION

1. Use. In AM-101 and AM-101-X Volume Control Amplifiers to eliminate changeover "thumps" and "clicks".

2. List of Parts (per Volume Control Amplifier):

1	AM-2048 Terminal Strip
2	SN-612 Resistor, 10,000 ohms
1	SN-689 Resistor, 15,000 ohms
4	SN-1881 Resistor, 240,000 ohms
1	SN-1882 Capacitor, 50 mf
12"	EW-631 Sleeving
12"	EW-920 Wire

B. INSTALLATION

The procedure for each AM-1000 Amplifier in each AM-101 or AM-101-X Volume Control Amplifier is as follows. (See Drawing WD-108).

NOTE: The AM-101-X Amplifier is the same as the AM-101 Amplifier except that it is equipped with two AM-1000 Amplifiers.

1. Remove R-6.
2. In AM-101-X only, remove R-11.
3. Remove R-13.
4. Install an SN-612 Resistor (10,000 ohms) in place of R-6.
5. Connect an SN-1881 Resistor (240,000 ohms) from C-4 to ground on TS-2.
6. Connect an SN-1881 Resistor (240,000) from C-4 to C-8.
7. In AM-101 only, connect an SN-1882 Capacitor (50 mf) from C-8 to ground on TS-2.
8. In AM-101-X only, mount the AM-2048 Terminal Strip in accordance with Figure 1.
9. In AM-101-X only, connect an SN-1882 Capacitor (50 mf) and an SN-689 Resistor (15,000 ohms) in parallel to terminals 9 and 10 of AM-2048 and wire per Figure 2.

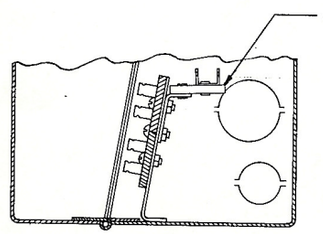

FIGURE 1

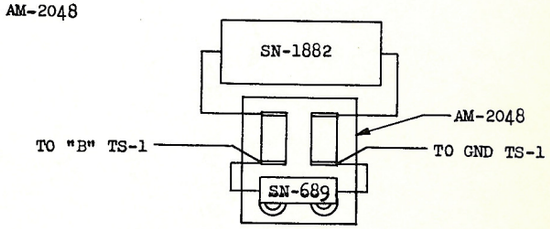

FIGURE 2

C. OPERATION

The AM-101 and AM-101-X Volume Control Amplifiers operate in the same manner as described in the Equipment Instruction for these units.

D. AVAILABILITY

This modification kit is available on request and should be installed in those locations where such changeover thumps and clicks are adversely affecting reproduction. These kits are being furnished to Altec on a no charge basis by International Projector Corporation and will be installed where needed on a similar basis.

E. MERCHANDISING

For each AM-101 or AM-101-X Amplifier order:

1 - AM-2256 Amplifier Modification Kit

Issued by
Engineering Department
Printed in U. S. A.

December 28, 1948
Issue #1

ALTEC SERVICE CORPORATION
SIMPLEX
SOUND EQUIPMENT BULLETIN

AM-2259 CONVERSION KIT
AM-1000 AMPLIFIER
EQUIPMENT INSTRUCTIONS

---

1. DESCRIPTION

A. Use. In AM-1000 Volume Control Amplifiers to replace the SN-532 Resistor, and provide a more satisfactory method of adjusting the gain of the amplifier for machine balancing.

B. LIST OF PARTS (Per Amplifier)

1 AM-2258 Volume Control Potentiometer Assembly, consisting of:-

1 SN-669 Nut	R&R	Complete Kit Net only
1 SN-1061 Washer	R&R	Complete Kit Net only
1 SN-1887 Potentiometer ←or	R&R	Complete Kit Net only
1 SN-1888 Bracket	Net	Complete Kit Net only
1 SN-1890 Jam Nut	Net	Complete Kit Net only

1 SN-675 Screw
1 SN-686 Lockwasher

2. INSTALLATION

The installation procedure recommended for each AM-1000 is as follows:

A. Remove the WH-YEL or BLK wire and disconnect the SN-1129 Resistor (R-2) from the SN-532 Resistor (R-3).

B. Unsolder the other terminal of R-3 from the ground lug and remove R-3. Retain the SN-683 Nut.

C. Mount the AM-2258 Potentiometer Assembly on the chassis by means of the SN-675 Screw, SN-683 Nut and SN-686 Lockwasher. Use the SN-532 mounting hole in the chassis. The assembly should be positioned so that the slot in the potentiometer shaft is accessible for adjustment.

D. Connect the WH-YEL or BLK wire, removed under "A" above, to the center terminal of the potentiometer and connect R-2 to the left terminal of the potentiometer.

3. OPERATION

Adjust the potentiometer as required to equalize machines, turning in a clockwise position to increase the gain. Tighten the SN-1890 Jam Nut when the adjustment is completed.

4. ASSOCIATED DRAWING. WD-108 AM-101 Volume Control Amplifier, Wiring Diagram.
WD-100 AM-101 Volume Control Amplifier, Schematic.

Issued by
Engineering Department
Printed in U.A.A.

October 14, 1949
Issue #1

1. DESCRIPTION.

The AM-141 Volume Control Amplifier consists of an AM-1010 Volume Control Amplifier, the main system volume control, and a special input jack enclosed in a wall mounting metal cabinet 10" high x 8" wide x 4" deep, with a cover hinged at the left. Total weight 8 lbs.

A. Characteristics - AM-1010 Amplifier

Type	-	Chassis Type two stage resistance, coupled.
Gain	-	Max 49 db
Impedance Input	-	166,000 ohms
Impedance Output	-	5,000 ohms
Gain Control	-	Potentiometer (40 db) - not in equal steps.
P.E.C. Control	-	Potentiometer on terminal strip for varying P.E.C. potential.
Vacuum Tubes	-	One 1620 in first stage and one 6J7 in second stage.
Power Supply	-	Plate and filament supply obtained from AM-1011 (Power Amp.)
Accessories	-	Input jack on chassis provided for special inputs of high impedance. When jack is in use the sound mechanisms are inoperative.
Associated Dwg.	-	WD-158 Schematic and wiring.

2. INSTALLATION.

The AM-141 should be mounted approximately 3" below the observation port between the two machines, as shown on the system conduit layout. For convenience in installation the AM-1010 and the terminal strip may be removed as a unit by loosening the two chassis mounting screws and removing the two terminal strip mounting screws.

External connections to the terminal strip should be made per the system wiring diagram and the Equipment Bulletin "SH-2103 Coaxial Cable". These external wires should run below the terminal strip, and not above, to avoid interference with the AM-1010 Amplifier cable form.

A. Equalization of PEC Outputs. The potentiometer on the terminal strip should be adjusted with a screw driver so that the output of both sound mechanisms is the same. This potentiometer should be adjusted after all adjustments have been made in the sound mechanisms, and when carefully made will accurately equalize the outputs.

B. The Main Volume Control should be adjusted, as required, to compensate for variations in prints, size of audience, etc.

3. OPERATION.

A. Film Reproduction. The AM-1010 is ready for operation when the main system power supply switch is set in "ON" position. Set the changeover switch (See Equipment Bulletin "SW-1087 Switch") so that the projector being threaded is inoperative (exciter Lamp dim). Set the volume control as required by the specific installation conditions, and when the incoming machine is up to speed make the changeover by operating the changeover switch. The volume control, when turned to the extreme counter-clockwise position, "cuts off" all sound from the stage speakers.

B. Special Input. Insert the special input plug in the jack on the left side of the cabinet and adjust the volume as required. The special input plug must be removed for film reproduction - otherwise both sound mechanisms are inoperative.

C. Where desirable and necessary the high end response may be shelved down 8 db (refer to E.B. LU-1047 Network, F.40.21) by transferring H.F. lead to 18 ohm section of network and parallel 15 ohm section with 15 ohm 10 watt resistor.

D. If hum level is high it may be decreased by modifying circuit in accordance with sketch ohm on WD-158.

4. MAINTENANCE.

A. Vacuum Tubes. Tubes should be tested monthly by substituting a new tube. Tube prongs should make good contact, and should be clean and bright. Careful bending of the socket contacts may be resorted to, if necessary, to provide good contact and the prongs may be burnished with crocus cloth, if necessary.

B. Capacitors. Check all clamping rings and nuts periodically and tighten if necessary.

CONCEALED CONDUIT INSTALLATIONS.

When the conduits from the AM-141 to the sound mechanism are concealed, Belden #8401 Microphone Cable and two #16 BRC wires should be substituted for the coaxial cable supplied with the equipment.

Printed in U. S. A.
Issue #1
September 15, 1941

WD-158

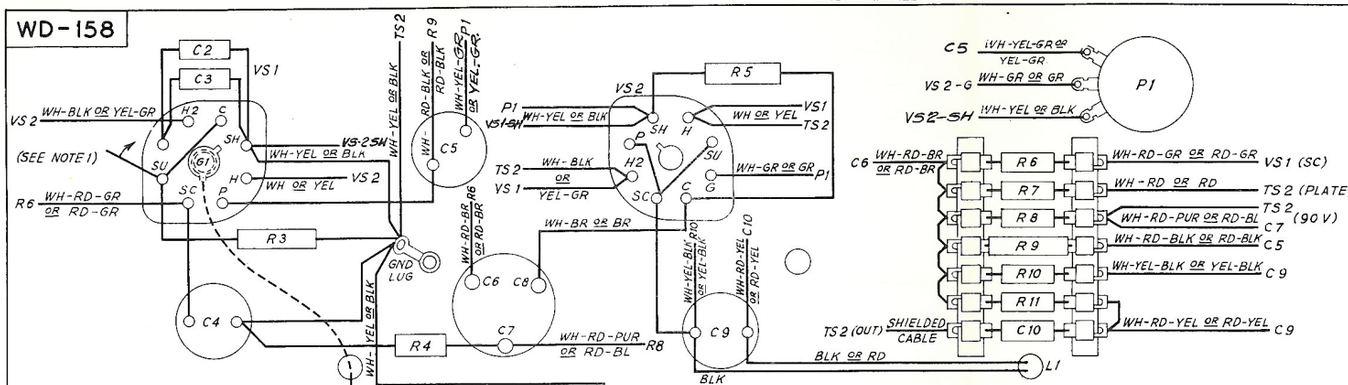

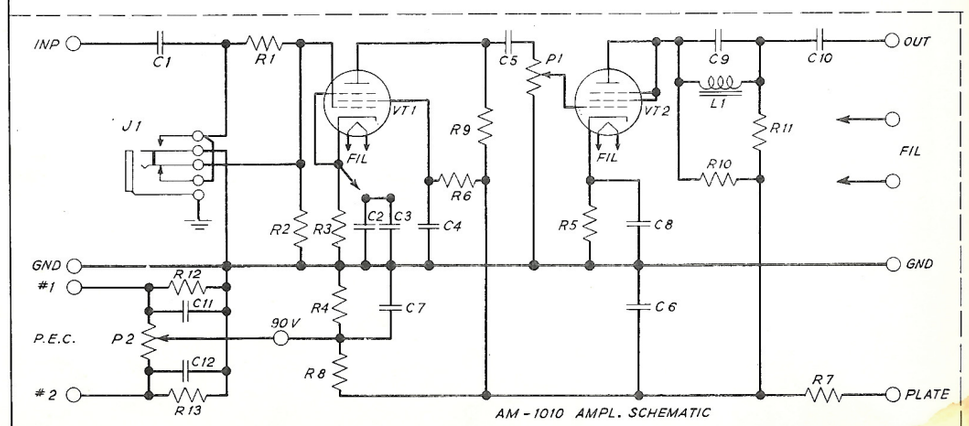

AM-1010 AMPLIFIER		
DESIG.	PART NO.	APPARATUS
C1,2,3,C10	SN-788	CAPACITOR, .01 MF, 500 V
C4, C5	SN-514	CAPACITOR, .05 MF, 400 V
C6	SN-506	CAPACITOR, 8 MF, 250 V
C7		CAPACITOR, 8 MF, 150 V
C8		CAPACITOR, 10 MF, 50 V
C9	SN-1082	CAPACITOR, .25 MF, 200 V
R1,2, R9	SN-539	RESISTOR, 510,000 Ω, 1 WATT
R3	SN-1129	RESISTOR, 4700 Ω, 1 WATT, WIRE WOUND
R4	SN-1071	RESISTOR, 100,000 Ω, 1/2 WATT
R5	SN-1130	RESISTOR, 2000 Ω, 1 WATT, WIRE WOUND
R6	SN-537	RESISTOR, 2.2 MEG, 1/2 WATT
R7	SN-540	RESISTOR, 24,000 Ω, 1/2 WATT
R8	SN-688	RESISTOR, 51,000 Ω, 1/2 WATT
R10,11	SN-612	RESISTOR, 10,000 Ω, 1/2 WATT
L1	SN-1045	REACTOR, 7 HENRIES
J1	SN-1077	JACK
P1	SN-1074	POTENTIOMETER, 500,000 Ω, 1/2 WATT
TS1	SN-611	TERMINAL STRIP
VS1,2	SN-561	SOCKET, OCTAL
VT1 *	SN-792	VACUUM TUBE (TYPE #1620)
VT2 *	SN-1066	VACUUM TUBE (TYPE 6SJ7)
AM-2074 TERMINAL STRIP (TS2)		
C11	SN-1086	.1 MF, 200 V
C12		.1 MF, 200 V
R12,13	SN-539	RESISTOR, 510,000 Ω, 1 WATT
P2	SN-1085	POTENTIOMETER, 200,000 Ω, 1/2 WATT

*INDICATES NON-COMPONENT ITEM WHICH MUST BE ORDERED SEPARATELY.

NOTE 1: HIGH FREQUENCY EQUALIZATION

REDRAWN WITH EXTENSIVE CHANGES

ISSUE: 4

R-3 WAS 5100 Ω

ISSUE: 5

WIRE FROM P-1 TO VS 2-5, WAS WH-YEL OR BLK WIRE FROM P-1 TO C-5 WAS WH-YEL-GR OR YEL-GR, AS PER DEV. PERMIT NO 15

ISSUE: 6

WH-YEL OR BLK WIRE SHOWN ON C-5 WAS WH-YEL-GR OR YEL-GR. ADDED WH-YEL-GR OR YEL-GR TO P-1 WIRE ON VS-2

ISSUE: 7

C5 WIRE SHOWN ON P1 WAS VS2-G & VS2-SH WIRE ON P1 WAS C5. ON VS2-SH WH-YEL-GR OR YEL-GR WAS REMOVED FROM WIRE TO P1. ON C5, WH-YEL-GR OR YEL-GR WIRE WAS WH-YEL OR BLK.

ISSUE: 8

AM-141 VOL. CONT. AMPLIFIER
WIRING DIAGRAM & SCHEMATIC

INTERNATIONAL PROJECTOR CORPORATION
55 LA FRANCE AVENUE
BLOOMFIELD NEW JERSEY

DR. CH'K. APP'D.

WD-158

REDRAW FROM WD-158 SIMPLEX. TO SHOW MOD. FOR NOISE REDUCTION.	APP'D.
158.1 9-30-49	W.H.S.

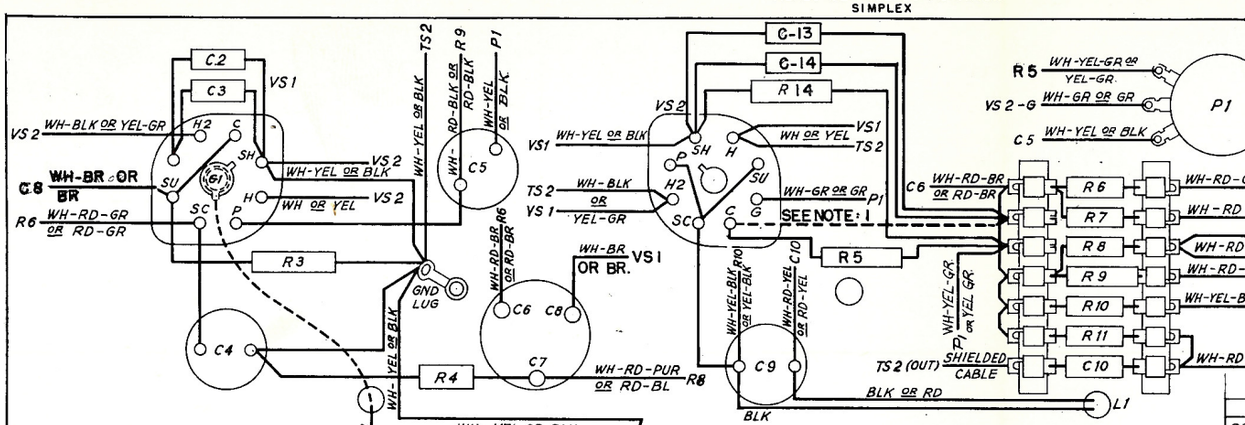

AM-1010 AMPL. (BOTTOM VIEW)

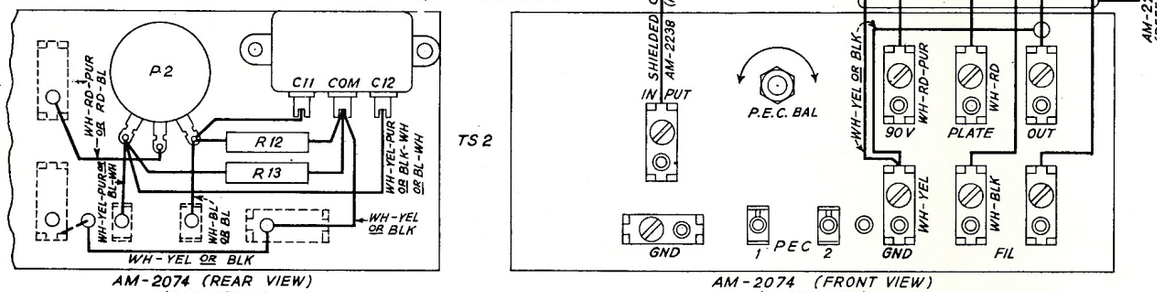

AM-2074 (REAR VIEW)
(REFERENCE)

AM-2074 (FRONT VIEW)
(REFERENCE)

AM-1010 AMPLIFIER		
DESIG.	PART NO.	APPARATUS
R 14	SN-769	RESISTOR, 3000Ω / WATT. W.W.
C 13, C 14	SN-788	CAPACITOR, .01 MF, 500 V.
C1,2,3,C10	SN-788	CAPACITOR, .01 MF, 500 V
C4, C5	SN-514	CAPACITOR, .05 MF, 400 V
C6	SN-506	CAPACITOR, 8 MF, 250 V
C 7		CAPACITOR, 8 MF, 150 V
C 8		CAPACITOR, 10 MF, 50 V
C 9	SN-1082	CAPACITOR, .25 MF, 200 V
R1, 2, R9	SN-539	RESISTOR, 510,000Ω, 1 WATT
R3	SN-1129	RESISTOR, 4700Ω, 1 WATT, WIRE WOUND
R 4	SN-1071	RESISTOR, 100,000Ω, 1/2 WATT
R 5	SN-1130	RESISTOR, 2000Ω, 1 WATT, WIRE WOUND
R 6	SN-537	RESISTOR, 2.2 MEG, 1/2 WATT
R 7	SN-540	RESISTOR, 24,000Ω, 1/2 WATT
R 8	SN-688	RESISTOR, 51,000Ω, 1/2 WATT
R 10, 11	SN-612	RESISTOR, 10,000Ω, 1/2 WATT
L 1	SN-1045	REACTOR, 7 HENRIES
L 2	SN-1500	REACTOR
P 1	SN-1074	POTENTIOMETER, 500,000Ω, 1/2 WATT
TS 1	SN-611	TERMINAL STRIP
VS 1, 2	SN-561	SOCKET, OCTAL
VT 1 *	SN-792	VACUUM TUBE (TYPE #1620)
VT 2 *	SN-1066	VACUUM TUBE (TYPE 6SJ7)
J 1	SN-1077	JACK
AM-2074 TERMINAL STRIP (TS 2)		
C 11	SN-1086	.1MF, 200 V
C 12		.1MF, 200 V
R12, 13	SN-539	RESISTOR, 510,000Ω, 1 WATT
P 2	SN-1085	POTENTIOMETER, 200,000Ω, 1/2 WATT

*INDICATES NON-COMPONENT ITEM WHICH MUST BE ORDERED SEPARATELY.

NOTE 1: HIGH FREQUENCY EQUALIZATION

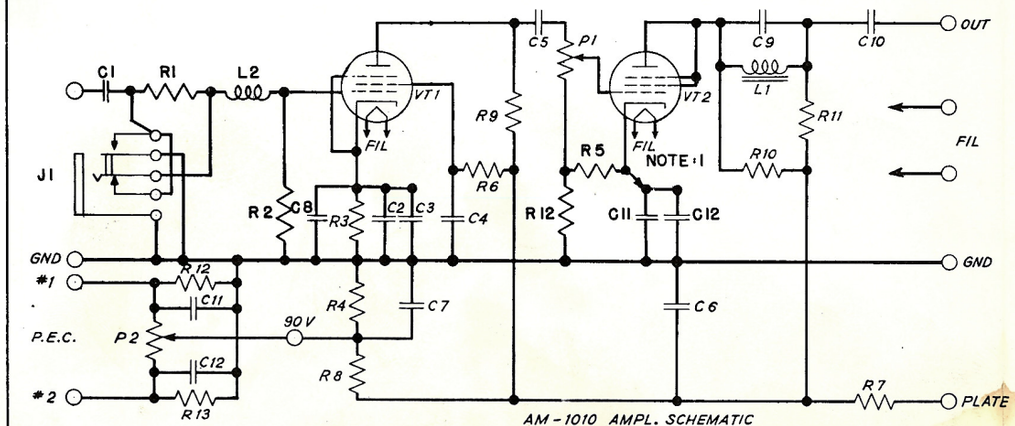

AM-1010 AMPL. SCHEMATIC

DRAWN BY [illegible] DATE 9-30-49
APP'D WHS. DATE 9-30-49

AM-141 VOL. CONT. AMPLIFIER MODIFIED FOR NOISE REDUCTION WIRING DIAGRAM & SCHEMATIC

ALTEC SERVICE CORPORATION N.Y.C.

AR-217.0

1. DESCRIPTION - The AM-142 consists of an AM-1011 Amplifier, an LU-1046 Monitor Speaker and a monitor volume control in a wall mounted, hinged cover, metal cabinet 14-1/2"H x 18"W x 11-1/2"D. Weight 65lbs.

1.1 The AM-1011 is an AC operated chassis type, two stage plus phase inverter, negative feedback, push-pull output power amplifier. An adjustable warping circuit is provided in the feedback loop to vary the high and low frequency response as may be required. A single stage transformer coupled monitor amplifier is also included on the same chassis.

1.2 The LU-1046 is an 8" dia. x 4" D cone type PM Speaker. Voice coil impedance 4 ohms. Weight 3 lbs.

2. CHARACTERISTICS (AM-1011)

Gain	.48 DB (Monitor Ampl. 20 DB)
Impedance	.Input (source) 5000 ohms (Monitor Ampl. 50 ohms) Output (load) Refer to Section 3.2. Transformer taps 12 & 24 ohms. (Monitor Ampl. 4 ohms).
Power Output	10 Watts, 32.2 DB; 40 DBM (Monitor Ampl. 2.5 Watts, 26.2 DB; 34 DBM)
Frequency Response	Refer to SC-43
Noise Level.	-35 DB; -27.2 DBM Note: To reduce monitor hum connect a CD-UP9BJ39-40/40 mf - 450V Condenser (both sections in parallel) in parallel with C-13.
Vacuum Tubes	2 - 6SJ7, 2 - 6L6, 1 - 5Z3 , 1 - 6F6
Power Supply Required . .	105-125 V AC, 50-60 cycles, 115 Watts
Power Supply Furnished . .	Heater and plate supply for AM-141 Vol. Contr. Ampl.
Dimensions	7-1/2"H x 17"W x 10"D
Weight	.35 lbs.

3. INSTALLATION INSTRUCTIONS

3.1 Power Transformer Connections.

Average Line Voltage	Connect to T_2 Tap
120 - 130	125 V (Connection as shipped)
110 - 120	115 V
100 - 110	105 V

3.2 Output Transformer Connections - For optimum power output with a nominal 12 ohm speaker load, the "output" and "feedback" wires should be connected to the "24 ohm" output transformer terminal. Amplifier output impedance on this tap is approximately 1.25 ohms.
Note: Output Transformer has terminals marked "24 ohms" and "12 ohms". Simplex Equipment Instructions advise that the "24 ohm" terminal is the 12 ohm load terminal and the "12 ohm" terminal is the 6 ohm load terminal.

3.3 Warping circuit adjustment - Adjust response curve, as required, in accordance with instructions on Dwg. SC-43.

ASSOCIATED DRAWINGS

WD-159 Schematic and Wiring Diagram
SC-43 Freq. Response Characteristics

Issued by
Engineering Department
Printed in U. S. A.

June 19, 1948
Issue #2

WD-159

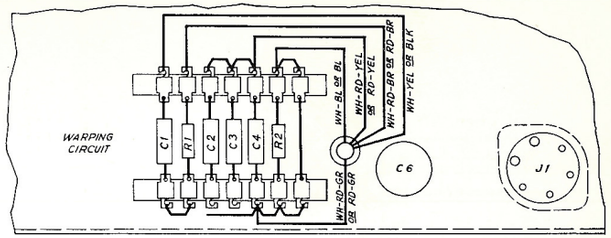

PARTIAL VIEW - TOP CHASSIS

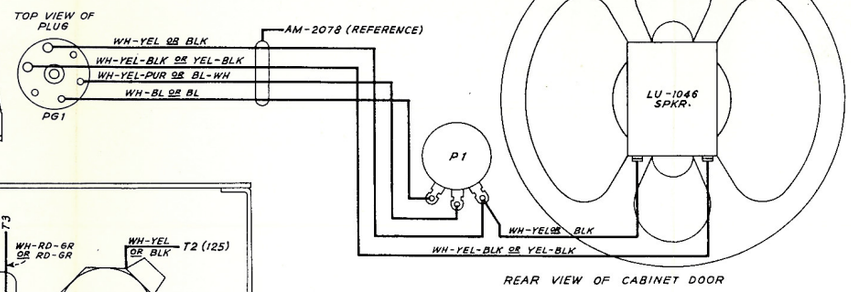

REAR VIEW OF CABINET DOOR

NOTES:
1. AMPLIFIERS FROM SERIAL #171 UP, RESISTOR R7 IS SN-539 (500,000Ω) INSTEAD OF SN-526 (30,000Ω)
2. AMPLIFIERS FROM SERIAL #264 UP ARE WIRED AS SHOWN. BELOW SERIAL #264, AC COLOR CODE WAS REVERSED. COLOR OF WIRING TO FUSE AND TRANSFORMER CHANGED TO AGREE.

REDRAWN FROM ISSUE: 4 WITH EXTENSIVE CHANGES

ISSUE: 5 6-11-48

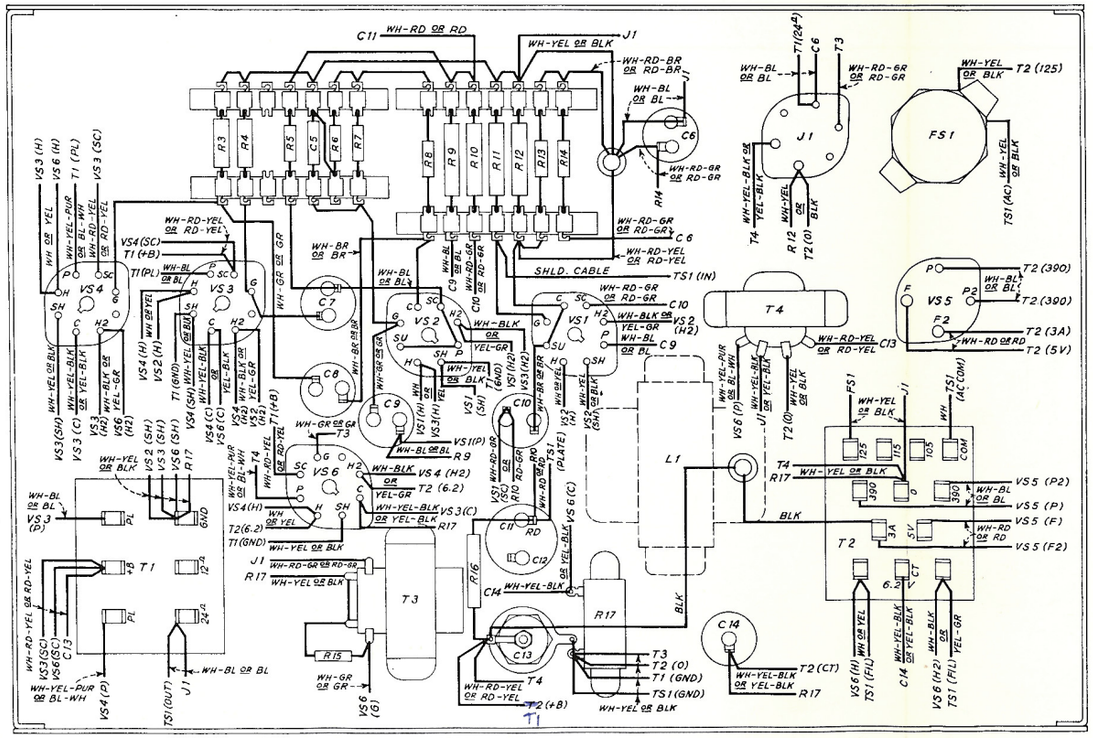

BOTTOM VIEW OF CHASSIS

SCHEMATIC

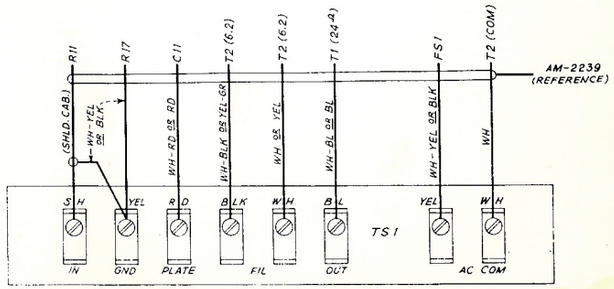

DESIG.	PART NO.	APPARATUS
C1	SN-515	CAPACITOR, .005 MF, 500 V
C2	SN-582	CAPACITOR, .001 MF, 500 V
C3	SN-581	CAPACITOR, .00075 MF, 500 V
C4	SN-512	CAPACITOR, .0005 MF, 500 V
C5	SN-516	CAPACITOR, .0003 MF, 500 V
C6,7,8,9,10	SN-514	CAPACITOR, .05 MF, 400 V
C11, C12	SN-507	CAPACITOR, C11- 20/20 MF, C12- 4/250 MF
C13	SN-1553	CAPACITOR, 12 MF, 600 V
C14	SN-502	CAPACITOR, 25 MF, 50 V
R1	SN-772	RESISTOR, 510Ω, 1/2 WATT
R2	SN-1071	RESISTOR, 100,000Ω, 1/2 WATT
R3,R4,R9	SN-580	RESISTOR, 270,000Ω, 1 WATT
R5	SN-526	RESISTOR, 30,000Ω, 1/2 WATT
R6, R15	SN-540	RESISTOR, 24,000Ω, 1/2 WATT
R8	SN-531	RESISTOR, 5,000Ω, 1/2 WATT
R10	SN-517	RESISTOR, 2 MEG. 1 WATT

DESIG.	PART NO.	APPARATUS
R7, R11	SN-539	RESISTOR, 510,000Ω, 1 WATT
R12	SN-1130	RESISTOR, 2,000Ω, 1 WATT, WIRE WOUND
R13, R14	SN-528	RESISTOR, 7,500Ω, 1/2 WATT
R16	SN-1111	RESISTOR, 15,000Ω, 2 WATT
R17	SN-535	RESISTOR, 240Ω, 7.5 WATT, WIRE WOUND
TS1	AM-2072	TERMINAL STRIP ASSEMBLY
J1	SN-564	SOCKET, 6 PRONG
P1	SN-1120	POTENTIOMETER, 2,000Ω, 1/2 WATT
PG1	SN-560	PLUG, 6 PRONG
T1	SN-575	OUTPUT TRANSFORMER
T2	SN-1076	POWER TRANSFORMER
T3	SN-1107	INPUT TRANSFORMER
T4	SN-1106	OUTPUT TRANSFORMER
L1	SN-1073	REACTOR
VS1,2,3,4,6	SN-561	SOCKET, OCTAL
VS5	SN-562	SOCKET, 4 PRONG

DESIG.	PART NO.	APPARATUS
FS1	SN-554	FUSE RECEPTACLE
* VT1-VT2	SN-1066	VACUUM TUBE TYPE 6SJ7
* VT3-VT4	SN-1109	VACUUM TUBE TYPE 6L6
* VT5	SN-708	VACUUM TUBE TYPE 5Z3
* VT6	SN-1075	VACUUM TUBE 6F6
F1	SN-549	FUSETRON (2 AMP.)

*INDICATES NON-COMPONENT ITEM WHICH MUST BE ORDERED SEPARATELY.

AM-142
AMPLIFIER EQUIPMENT
WIRING DIAGRAM & SCHEMATIC
INTERNATIONAL PROJECTOR CORPORATION
55 LA FRANCE AVENUE
BLOOMFIELD NEW JERSEY
DR. CH'K. APP'D.
WD-159

1. DESCRIPTION

The AM-145 Unit is usually a wall mounted cabinet 11-3/4" high x 9-1/2" wide x 4-1/2" deep weighing 10 lbs. Sometimes it is mounted in a convenient location near the sound mechanism on a pipe support fastened to the floor. It contains an AM-1007 Preamplifier.

A. Characteristics of AM-1007 Amplifier

Type - Chassis type, 2 stage inverse feed-back with interstage resistance coupling. Provision is made for field mounting of a W.E. 127-C or 132-C output transformer for coupling to fader.

Gain - 39 db. maximum

Input Impedance - 250,000 ohms

Output Impedance - 500 ohms

Gain Control - In grid circuit of first tube - adjustable with screw driver.

Vacuum Tubes - 2 - 6C5 (furnished separately).

Power Supply - Plate voltage of 90 or 120V DC and filament voltage of 10V AC or 12V DC from external source.

P.E.C. Supply - Voltage divider furnishes voltage for sound mechanism P.E.C.

Equalization - Warping circuit in the inverse feed-back circuit.

Accessories - Terminal strip with plate and filament "ON-OFF" switch and an external cable form.

Associated Drawing - WD-160 Schematic and Wiring Diagram
SC-46 Frequency Response Chart.

2. INSTALLATION

A. On the Front Wall. Normally an AM-145 should be mounted below each observation post in such a location that the supplied length of SH-2100 Coaxial Cable (72") can be installed in the regular manner.

B. On a Pipe Support. Where the front wall space is inadequate to install the cabinet in the regular manner it may be mounted on a pipe support away from the wall, as shown in Fig.1, the pipe support threading into a flange (3/4" pipe thread) provided in the bottom of the cabinet.

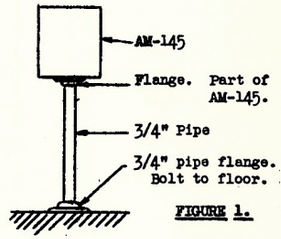

FIGURE 1.

C. External Connections. Terminal strip connections should be made per drawing WD-161 associated with the installation instructions.

D. Gain Control. The amplifier is shipped with the potentiometer P_1 set for a gain of 30 db. A reference mark on the amplifier chassis indicates this setting, which has been established for transmission runs. The potentiometer in each amplifier should be adjusted so that outputs are equal, and adequate volume level is obtained in the auditorium with normal setting of the fader, using a standard recording such as the Academy Test Reel. Variations in prints, size of audience, etc., should be compensated for by adjustment of the fader.

E. Warping Circuit Adjustments. The warping circuit is set for the L_{23}, H_{23} curve (See drawing SC-46). High and low end adjustments are provided as a means of obtaining the optimum overall system frequency response characteristic for the specific auditorium. Changes in the warping circuit should be made only after careful listening tests and checking of the operation of the other system components. In checking lens tube adjustment in SH-1000 or SH-1001 Sound Mechanism, the procedure described in Equipment Bulletin "SH-1000 Sound Mechanism" will be facilitated and the accuracy of adjustment increased by temporarily setting the high end warping circuit for the H_{20} curve since this setting raises the high end and reduces the masking effect of background noise.

3. OPERATION

For normal operation switches S_1 and S_2 should be set in "ON" position. These switches are provided to isolate the amplifier for service and test.

4. MAINTENANCE

A. Vacuum Tubes. The tubes should be tested monthly by substituting a new tube. Tube prongs should make good contact and should be clean and bright. Careful bending of the socket contacts may be resorted to and the prongs burnished with crocus cloth if necessary.

B. Capacitors. Check all clamping rings and nuts periodically, and tighten if necessary.

5. CONCEALED CONDUIT INSTALLATIONS

When the conduits from the AM-145 to the sound mechanism are concealed, or when coaxial cable lengths greater than 6' are required in exposed conduit layouts, Belden #8401 Microphone Cable should be substituted for the SH-2100 Coaxial Cable supplied, a compensating capacitor (obtain locally as required) substituted for C_8 in the high end warping circuit in the AM-145, and C_8 strapped to C_7, see Fig.2 below.

Since the value of the capacitor substituted for C_8 depends upon the amount of cable used, the length used for each projector should be carefully measured and the value of the capacitor determined from the Fig. 3 below. Standard mica capacitor(s) should be used.

This substitution is necessary, due to the difference in capacity of the two cables, in order to obtain the frequency response characteristic shown on drawing SC-46. This method of compensation applies to all high end curves, except H_{20} which may be considered a special condition.

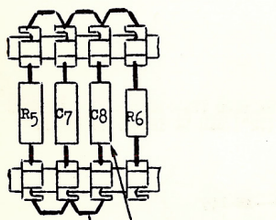

FIGURE 2.

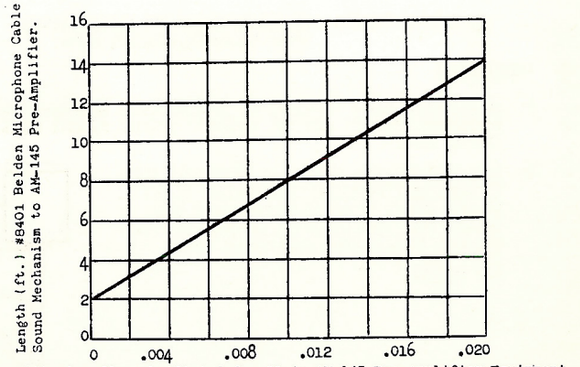

FIG. 3

WD-160

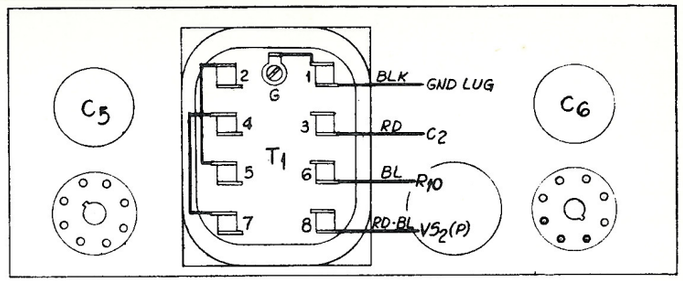

TOP VIEW OF CHASSIS

NOTES:
1 T1 IS A W.E. # 127-C OR 132-C OUTPUT TRANSFORMER, OBTAINED FROM REPLACED AMPLIFIERS AND INSTALLED IN THE FIELD.
2-REFER TO DRAWING SC-46 FOR WARPING CIRCUIT ADJUSTMENTS.

	DESIG	PART No.	APPARATUS
	C1, C10	SN-515	CAPACITOR - .005 MF - 500 V
	C2, C3, C4	" 506	" C4 $\frac{10}{50}$; C2 $\frac{8}{250}$, C3 $\frac{8}{150}$,
	C5	" 514	CAPACITOR - .05 MF - 400 V
	C6	" 511	" - .1 " - 200 V
	C7, C8	" 788	" .01 " - 500 V
	C9	" 1181	" .0025" - "
	R1	SN-1180	RESISTOR - 6 Ω - 5.5 WATT WIRE W.
	R2	" 772	" 510 Ω - 1/2 "
	R3	" 1071	" 100,000 Ω - 1/2 "
	R4, R11	" 580	" 270,000 Ω - 1 "
	R5	" 1130	" 2,000 Ω - 1 " WIRE W.
	R6	" 612	" 10,000 Ω - 1/2 "
	R7	" 540	" 24,000 Ω - 1/2 "
	R8, R10, R13	" 530	" 6,200 Ω - 1/2 "
	R9	" 531	" 5,000 Ω - 1/2 "
	R12	" 689	" 15,000 Ω - 1 "
	P1	SN-1186	POTENTIOMETER - 500,000 Ω
	T1	SEE NOTE	TRANSFORMER
	VS1, VS2	SN-561	OCTAL SOCKET
	S1, S2	" 608	SWITCH - D.P.S.T. (PART OF AM-2080 TERM. ST.)
	TS1	AM-2080	TERMINAL STRIP ASSEMBLY
*	VT1, VT2	SN-1179	VACUUM TUBE - TYPE 6C5

* INDICATES NON-COMPONENT ITEM WHICH MUST BE ORDERED SEPARATELY.

ISSUE:1 6-23-39
SN-1130 WAS SN-534. SN-1180 WAS 5.0 WATTS

ISSUE:2 12-20-39
ADDED "GR-RD" TC WIRE FROM R5 TO C-2 & VS1, ADDED YEL-GR TO WIRES OF S1 TO 12 V & 10V TERM'S, ADDED "RD" TO JUMPER WIRE FROM S2 TO PLATE TERM, CHGD VALUES OF RESISTORS IN SCHEDULE AS FOLLOWS - SN-772 WAS 500 Ω, SN-530 WAS 250,000 Ω, SN-540 WAS 25,000 Ω, SN-530 WAS 6,000 Ω

ISSUE 3 1-20-40

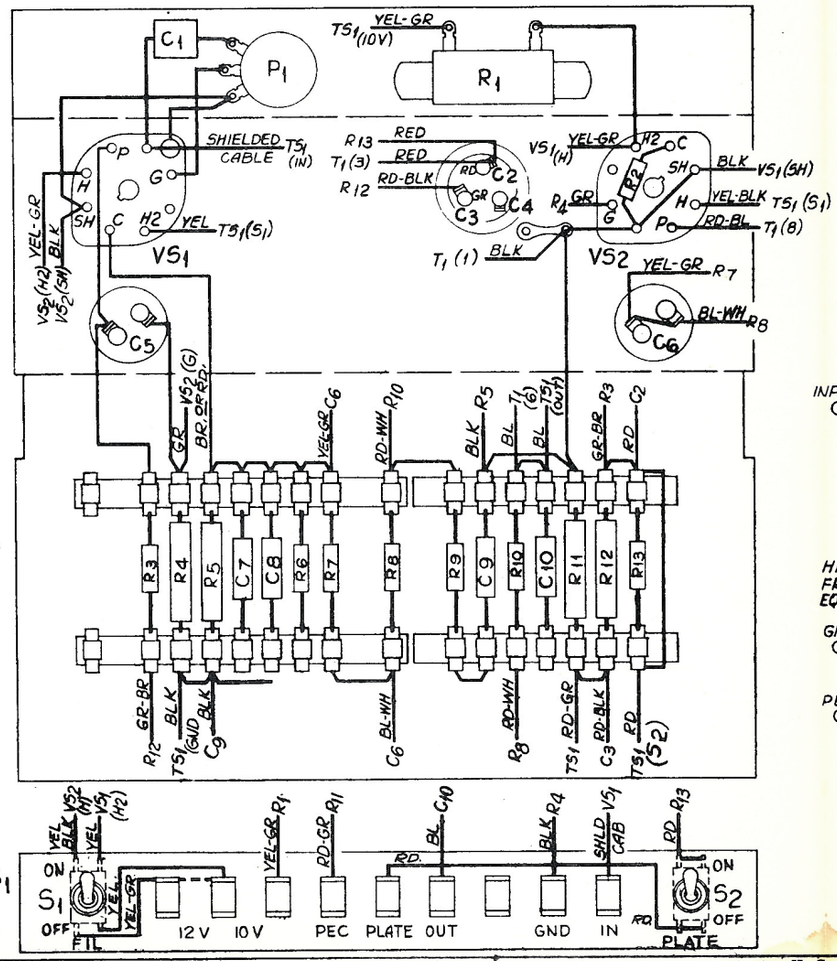

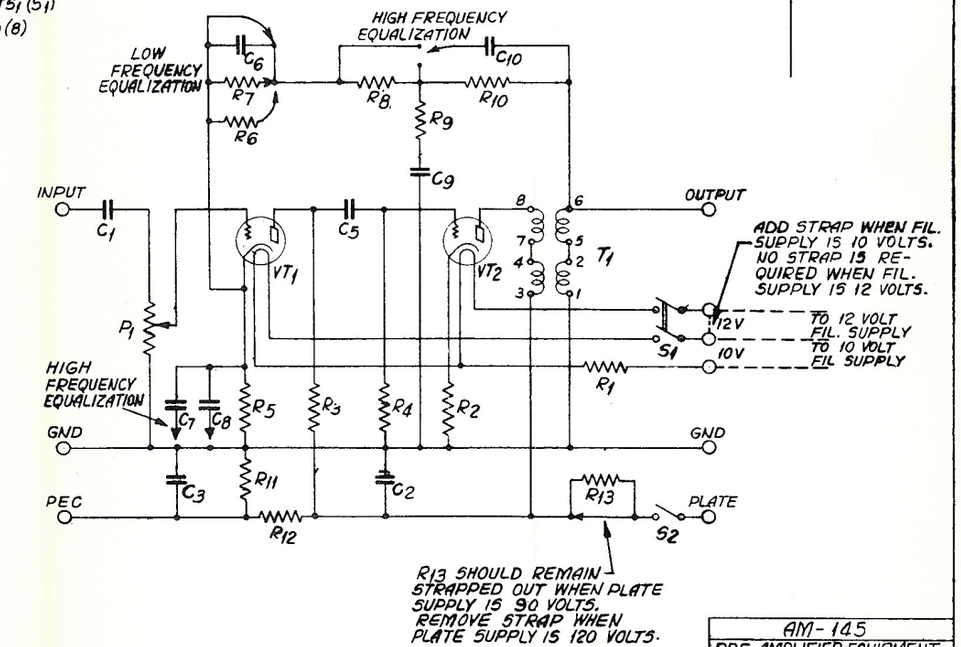

AM-145
PRE AMPLIFIER EQUIPMENT
WIRING DIAGRAM & SCHEMATIC
INTERNATIONAL PROJECTOR CORPORATION
90 GOLD STREET NEW YORK
DR E.G.M. CHK C.F.A. APPD MB

WD-160

WD-164

AM-147 AMPLIFIER-MONITOR SPEAKER			ISSUE:-1
DESIG.	PART NO.	APPARATUS	
C_1	SN-502	CAPACITOR 25 MF 50V	
C_2 & C_3	"-1291	" 8-8 MF 400V	
F_1	"-540	FUSETRON 2 AMP	
FS_1	"-554	FUSE RECEPTACLE	
LP_1	"-894	LAMP (9 VOLT. 2 AMP)	
P_1	"-1301	POTENTIOMETER 500,000 Ω	
R_1	"-535	RESISTOR 250 Ω 10 WATT W.W.	
S_1	"-608	SWITCH D.P.S.T.	
SPKR	LU-1053	MONITOR UNIT	
T_1	SN-1290	POWER TRANSFORMER	
VS_1	"-561	OCTAL SOCKET	
VT_1	"-1293	VACUUM TUBE TYPE 5Y4	
VT_2	"-1109	" " " 6L6	
SKT_1	"-1294	PILOT LAMP SOCKET	
	"-1309	CABLE FORM	
TS_1	AM-2086	TERMINAL STRIP	

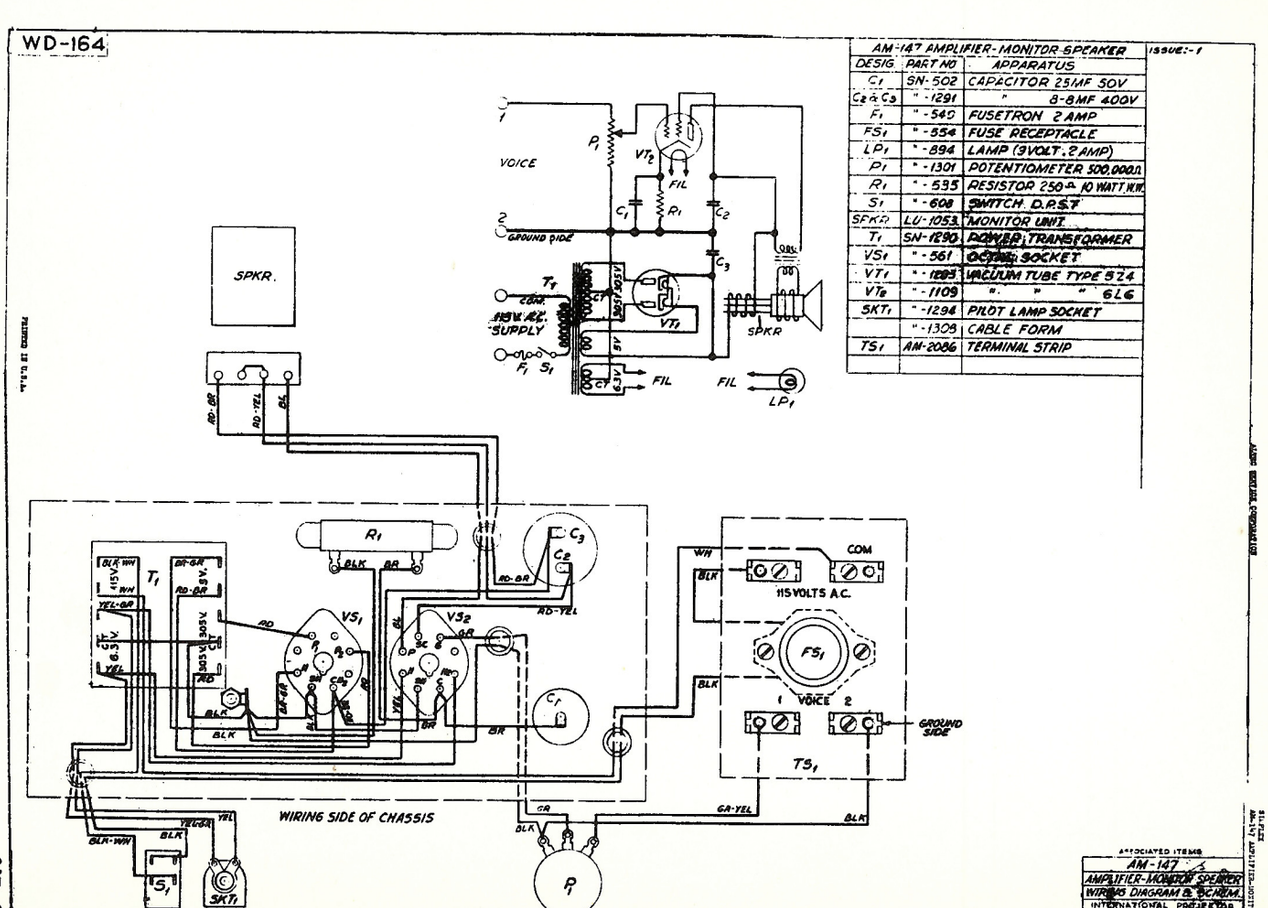

ASSOCIATED ITEMS
AM-147
AMPLIFIER-MONITOR SPEAKER
WIRING DIAGRAM & SCHEM.
INTERNATIONAL PROJECTOR CORPORATION
WD-164

WD-164

1. DESCRIPTION

The AM-148 Unit is a wall mounted cabinet 12-1/2" high x 9" wide x 6-1/2" deep, weighing 13 lbs. It contains two AM-1012 Volume Control Amplifiers. The cabinet is mounted for exposed conduit installations, and may be partially recessed in the wall when conduit is concealed.

A. Characteristics of AM-1012 Amplifier

Type	-	Chassis type, two stage resistance coupled inverse feedback.
Gain	-	46 db.
Input Impedance	-	250,000 ohms.
Output Impedance	-	10,000 ohms.
Gain Control	-	Potentiometer 20 steps - 2 db each.
P.E.C. Control	-	R_3 adjustable resistor with range of 6 db in cathode of first tube for equalization of P.E.C. output.
Vacuum Tubes	-	One 1620 in first stage and one 6J7 in second stage.
Power Supply	-	Plate and filament supply obtained from power amplifier and voltage divider in AM-1012 provides P.E.C. polarizing potential.
Accessories	-	Terminal strip on external cable providing for external connections, and also "ON", "OFF", switch for cutting out amplifier.
Associated Dwg.	-	WD-167 Schematic & Wiring Diagram

B. Changeover is made between machines by means of either AM-149 or AM-165 Switching Cabinets.

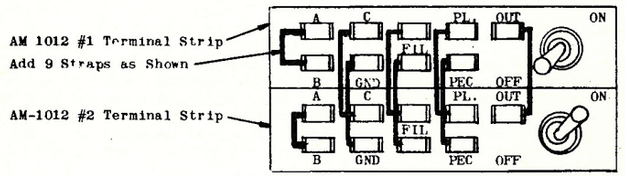

F I G U R E 1.

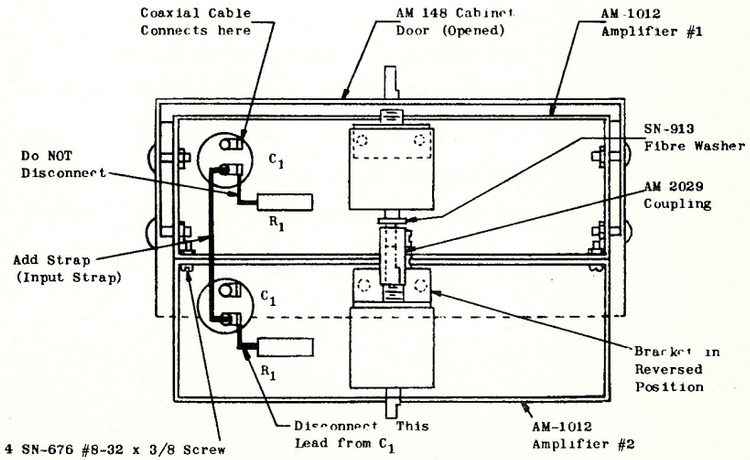

F I G U R E 2.

2. INSTALLATION OF AM-148

Each AM-148 should be mounted as shown on conduit layouts. Since a fixed length of SH-2100 Coaxial Cable is shipped with the system for coupling between the PEC output and AM-1012 input when the conduit is exposed, it is essential that the volume control amplifier be so located that the coaxial cable can be properly installed and connected. When the conduit is concealed, Belden #8401 Microphone Cable should be used instead of SH-2100.

A. External Connections. The connections to the terminal strips should be made per the system wiring diagram. All wires connected to terminals in the cabinet should run below the terminal strips and not above, to avoid possible interference between these wires and the AM-1012 chassis when the cabinet is closed.

The microphone cable, connected to the output terminal, should be securely fastened, by means of cord through tie cord holes in the terminal strip, in such a manner that there is no strain on the conductor.

Terminals on the two AM-1012 should be strapped together per Figure 1. The inputs should be strapped by connecting a wire between the lower terminals of C_1 in each amplifier (see Figure 2). In the second AM-1012 only disconnect R_1 from C_1 per Figure 2.

B. Equalization of PEC Outputs. Resistor R_3 in each AM-1012 should be adjusted so that the output of all volume control amplifiers is the same, with the same setting of the main volume control. This resistor should be adjusted after all adjustments have been made in the sound mechanism, and when carefully made will accurately equalize outputs.

C. Volume Control. In establishing normal operating level initially for a specific auditorium, set the volume control on step 9, run a standard recording, such as the Academy Test Reel, and adjust the gain control in the power amplifier as required to obtain adequate volume level in the auditorium.

3. OPERATION

A. Normal. Set the switch on the terminal strip of Amplifier #1 in "OFF" position, and the similar switch on Amplifier #2 in "ON" position. The second amplifier, which is slightly more accessible for tube replacements and servicing, is then the regular, and the first the standby amplifier. Set the changeover switch so that the projector being threaded is inoperative and make the changeover, when the in-coming machine is up to speed, by operation of the changeover switch. As noted in Section 2-C above, the volume control should be set as required by the specific installation conditions.

B. Emergency. If the regular amplifier becomes inoperative in either cabinet:

(1) Set the volume control in that cabinet on step 1. This is important to prevent disturbances in the sound circuit when the switches are operated as described below.

(2) Set the switch on the regular amplifier in that cabinet in "OFF" position.

(3) Set the switch on the standby amplifier in that cabinet in "ON" position.

(4) Return the volume control to normal setting, and the system may be operated in the regular way.

4. MAINTENANCE

A. Vacuum Tubes. The prongs should make good contact, and should be clean and bright.

B. Capacitors. Check all clamping rings and nuts periodically, and tighten if necessary.

ALTEC SERVICE CORPORATION
SIMPLEX

AM-1012 AMPLIFIER

WD-167

ISSUE: 1 6-13-40

DESIG.	PART #	APPARATUS
$C_1 C_2 C_3$	SN 514	CAPACITOR .05 MF 400V.
C_3	" 503	" 10 MF 50V.
C_5	" 505	" 10 MF 50V - PAPER TUBE
$C_6 C_7 C_8$	" 506	" C_6 8/150 C_7 8/250 C_8 10/50
C_9	" 1351	" .05 MF. 400V. - PAPER
R_1	" 539	RESISTOR 500,000Ω 1W I.R.C. TYPE BT-1
R_2	" 1129	" 5,000Ω 1W " " WW
R_3	" 532	" 5,000Ω 10W " " AB-A
R_4	" 538	" 200,000Ω 1W " " BT-1
$R_5 R_{14}$	" 537	" 2 MEG ½ W " " BT-½
$R_6 R_7$	" 530	" 6,000Ω ½ W " " BT-½
R_8	" 612	" 10,000Ω ½ W " " BT-½
R_9	" 522	" 70,000Ω 1W " " BT-1
R_{10}	" 523	" 55,000Ω 1W " " BT-1
R_{11}	" 689	" 15,000Ω 1W " " BT-1
R_{12}	" 527	" 25,000Ω 1W " " BT-1
R_{13}	" 688	" 50,000Ω ½ W " " BT-½
R_{15}	" 521	" 75,000Ω 1W " " BT-1
P_1	" 541	POTENTIOMETER 500,000Ω 19-20DB STEPS
TS_1	AM-2117	TERMINAL STRIP
$TS_2 TS_3$	SN 611	" "
S_1	" 968	SWITCH D.P.D.T. (PART OF AM-2117)
$S_1 V S_2$	" 561	SOCKET

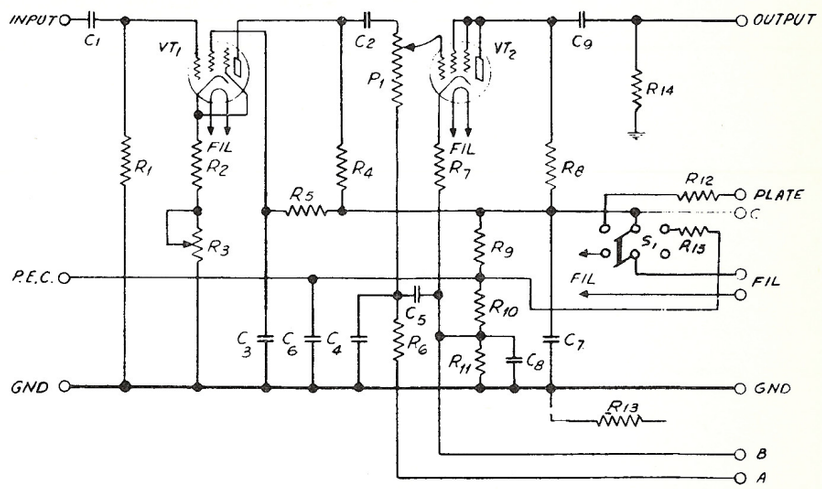

SCHEMATIC

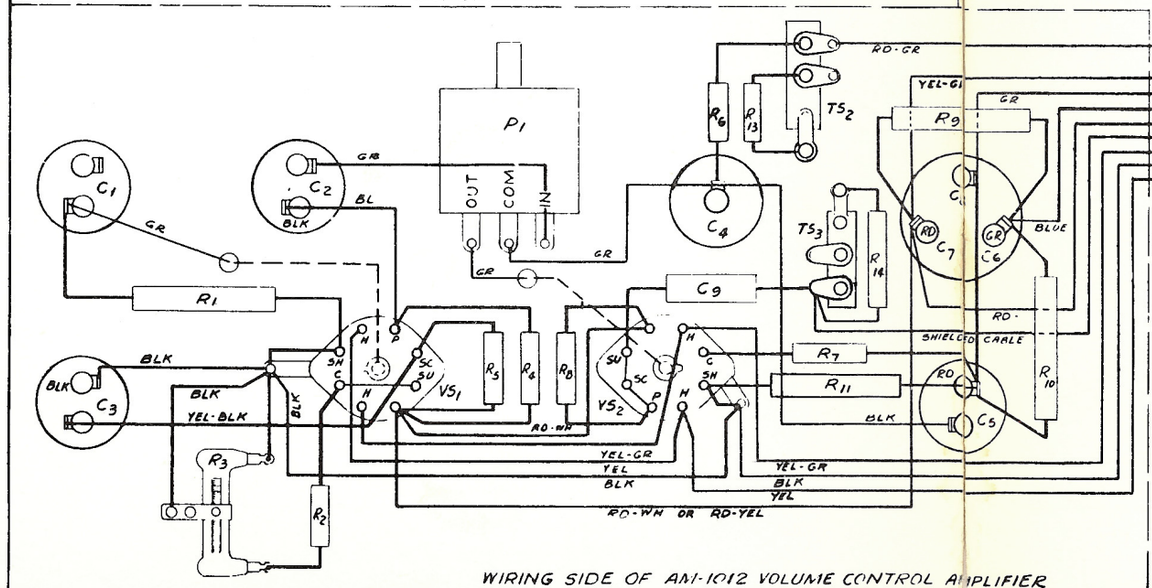

WIRING SIDE OF AM-1012 VOLUME CONTROL AMPLIFIER

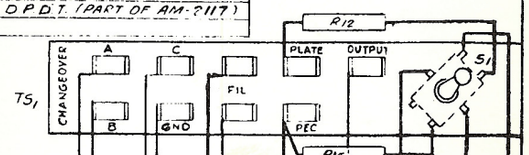

NOTES:-

1. ADJUST RESISTOR R_3 (RANGE 6DB) SO THAT OUTPUT OF EACH VOLUME CONTROL AMPLIFIER IS THE SAME WITH THE SAME SETTING OF THE VOLUME CONTROL (P_1). MOVE THE SLIDER AWAY FROM THE CHASSIS TO INCREASE THE GAIN.

2. VACUUM TUBES REQUIRED:-
   $V S_1$ - SN-792 (6J7-B31 STOCK). SPECIALLY SELECTED TUBE DISTINGUISHED BY AN "X" ON THE BOTTOM OF THE TUBE.
   $V S_2$ - SN-707 (STANDARD 6J7). SOME TUBES MAY BE MARKED WITH AN "M" ON THE BOTTOM.

AM-1012
VOLUME CONTROL AMPLIFIER
WIRING DIAGRAM & SCHEM.
INTERNATIONAL PROJECTOR CORPORATION
90 GOLD STREET NEW YORK
DR JLS CHK APPD
WD-167

ALTEC SERVICE CORPORATION
SIMPLEX
SOUND EQUIPMENT BULLETIN

AM-169
AM-169-X

1. DESCRIPTION.

The AM-169 consists of one AM-1014 Volume Control Amplifier, an AM-2156 Switch, a sound and exciter lamp changeover switch and a pilot lamp in a wall mounting metal cabinet 12½" high x 9" wide x 6½" deep, total weight 14 lbs. The AM-169-X includes two AM-1014 Volume Control Amplifiers. Otherwise it is the same as the AM-169. The cabinet is surface mounted for exposed conduit installations and may be partially recessed in the wall when the conduit is concealed.

A. The AM-1014 Volume Control Amplifier is a two-stage, resistance coupled, inverse feedback amplifier using one #1620 and one 6J7 tube, which are furnished separately. The #1620 is a low noise level tube and should be installed in the first stage, The maximum gain is 46 db., input impedance 250,000 ohms, output impedance 10,000 ohms. It contains a main system volume control, consisting of a potentiometer having twenty 2 db steps, which regulates the volume by varying the signal voltage applied to the grid of the second tube. When two AM-1014 are included, the two potentiometers are coupled together mechanically so that the knob on the front of the cabinet controls the volume, irrespective of the AM-1014 in use.
An adjustable resistor (R_3), range of 6 db., is provided in the cathode circuit of the first tube of each amplifier for equalization of PEC outputs by adjustment of the gain of the amplifier. Plate and filament supply are obtained from the power amplifier and a voltage divider in each amplifier provides PEC polarizing potential. A terminal strip is provided for external connections.

B. The AM-2156 Switch consists of a three-position selector switch ("Emerg"-"Reg"-"Off") with an adjustable stop and knob, and a two-position jack switch (Reg-Serv) mounted on a suitably engraved name-plate. A terminal strip on a ex tension cable form is provided for external connections and two cable forms for connection to the AM-1014 are also included.
In the AM-169-X the selector switch selects either of the two AM-1014 in the cabinet ("Reg-"Emerg") or disconnects both amplifiers ("Off") and connects the associated sound mechanism to the other operative cabinet. The two-position jack switch in the operative cabinet completes the connection ("Serv") so that both sound mechanism outputs are connected to the amplifier(s) in the operative cabinet. In the AM-169 the stop on the selector switch is set so that "Regular" and "Off" positions only are usable. Thus an inoperative amplifier or an entire cabinet may be completely isolated and is available for immediate servicing.

C. Changeover is made at either machine,by operating the switch lever on the front of either cabinet. Under regular operating conditions, sound and exciter lamp are transferred at the same time by means of the three-way circuit employed. An electronic type of changeover is used. In the "ON" amplifier the second tube has normal bias, whereas in the "OFF" amplifier the bias of this tube is increased beyond cutoff and the amplifier is inoperative. There is no switching in the sound circuit and the changeover is instantaneous and noisless.
When the AM-2156 Switch is set so that both sound mechanism outputs are connected to one cabinet, changeover is by exciter lamp only, the volume control amplifier being biased on at all times. Exciter lamp changeover provides for

Issued by
Engineering Department
Printed in U.S.A.

Issue #1
November 22, 1944

preheating of the standby lamp on AC to eliminate thermal lag in the filament. The pilot lamp indicates the sound mechanism in use.

2. INSTALLATION.

One AM-169 or AM-169-X should be mounted approximately 3" below the bottom of each observation port, or at such a height that the 1" conduit between the two cabinets is below the projection port. Since a fixed length of SH-2100 Coaxial Cable is shipped with the system for coupling between the PEC output and volume control amplifier input, it is essential that the volume control amplifier be so located that the coaxial cable can be properly connected.

A. External Connections. The connections to the terminal strips should be made per the system wiring diagram. All wires connected to terminals in the cabinet should run below the terminal strips AND NOT ABOVE, to avoid possible interference between these wires and the amplifier chassis.
The microphone cables should be securely fastened, by means of cord through tie cord holes in the terminal strip, in such a manner that there is no strain on the conductor.

B. Equalization of PEC Outputs. Resistor R_3 in each AM-1014 should be adjusted so that the output of all volume control amplifiers is the same, with the same setting of the main volume control. This resistor should be adjusted after all adjustments have been made in the sound mechanism and when carefully made will accurately equalize outputs.

C. Volume Control. The main volume control should be adjusted as required to compensate for variations in prints, size of audience, etc. In establishing normal operating level initially for a specific auditorium, set the volume control on step 9, run a standard recording, such as the Academy Test Reel, and adjust the gain control in the power amplifier as required to obtain adequate volume level in the auditorium.

3. INSTALLATION OF SECOND AM-1014.

When the second AM-1014 is added after the initial installation (Figure 1), the procedure is as follows:-

A. AM-2156 Switch. Remove the selector switch from its mounting plate and adjust the stop so that the switch moves through three positions ("Emerg"-"Reg"-"Off"). Remount the switch on the mounting plate.

B. Remove the AM-1014 from the cabinet without disconnecting the wires to the terminal strip. This amplifier is the regular amplifier and is remounted per "F" below.

C. Install the second AM-1014 in place of the amplifier removed under "B" above.

D. On the regular amplifier, remove the potentiometer from its bracket. Do not disconnect the wires. Reverse the potentiometer mounting bracket to provide space for the AM-2029 Coupling and remount the potentiometer.

E. Install the fiber washer (required to avoid grounding) and the AM-2029 Coupling on the potentiometer shaft of the emergency amplifier.

F. Attach the regular amplifier to the emergency amplifier per Figure 1.

G. Line up the two potentiometers. A slotted hole is provided in the bracket for this purpose. Tighten the coupling set screw and the potentiometer locknut.

H. Equalization of photo-electric cell outputs and volume control setting should be in accordance with Sections 2-B and 2-C.

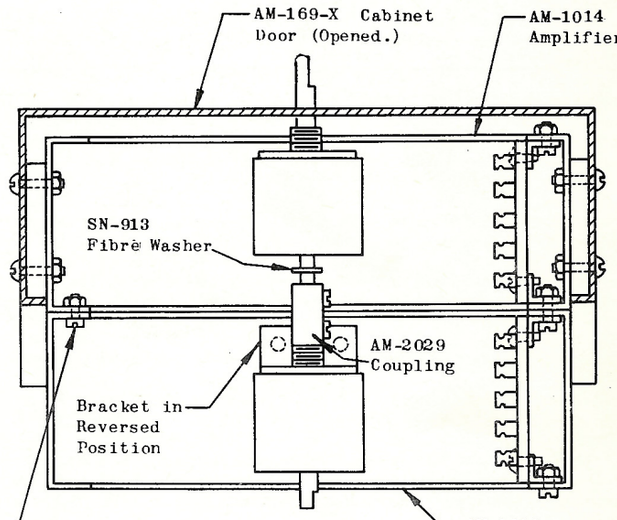

4 SN-676 #8-32 x 3/8 Screw
4 SN-683 #8-32 Hex Nut
4 SN-685 Lockwasher
4 SN-169 Std.Washer

FIGURE 1.

4. OPERATION.

A. Normal. Set both the selector switch and the two-position jack switch in "Reg" position. Set the changeover switch so that the projector being threaded is inoperative (pilot light is out) and make the changeover, when the incoming machine is up to speed, by operating the switch lever on either cabinet. As noted in Section 2-C above, the volume control should be set as required by the specific installation conditions.

B. Emergency.
(1) Regular amplifier in either cabinet becomes inoperative.
(a) Set the selector switch in "Emerg" position if dual amplifiers are installed. If only one AM-1014 is installed in each cabinet, see Paragraph (2) below.
(2) Entire cabinet becomes inoperative.
(a) Set the selector switch in inoperative cabinet in "Off" position.
(b) Set the jack switch in the other cabinet in "Serv" position. The pilot lamp then indicates only which sound mechanism is in operation. The volume control in the cabinet in which the jack switch is set in "Serv" position controls the volume of both machines and should be adjusted in the regular way.
NOTE:- In order to avoid clicks in the stage speakers when operating the AM-2156 Switch, the "PHONO"-"FILM"-"MICR" switch in the AM-170 NS-Amplifier Assembly should be set in either "NS" or "MICR" position before the switch is operated and returned to "FILM" position afterward.

5. MAINTENANCE.

A. Vacuum Tubes. The prongs should make good contact and should be clean and bright. Careful bending of the socket contacts may be resorted to and the prongs burnished with crocus cloth, if necessary, to provide good contact.

B. Capacitors. Check all clamping rings and nuts periodically and tighten if necessary.

C. Pilot Lamp. If the pilot lamp does not light, check the fuse mounted on the terminal strip mounting bracket, as removal of the exciter lamp while the power unit is in operation may cause the fuse to blow. Otherwise the pilot lamp should be replaced by removing the socket from the inside of the cabinet. A flickering pilot lamp indicates a defective tungar bulb in the exciter lamp power unit.

6. ORDERING.

A second amplifier for one cabinet should be ordered as:-

1 AM-1014 Volume Control Amplifier
1 SN-707 Vacuum Tube (6J7)
1 SN-792 Vacuum Tube (#1620)
1 AM-2016 Mounting Parts, Consisting of:-
1 AM-2029 Coupling
1 SN-913 Fiber Washer
6 SN-676 Screw (8/32 x 3/8 R.H.I.)
8 SN-683 Nut (8/32)
8 SN-685 Lockwasher (#1108)
4 SN-169 Standard Washer

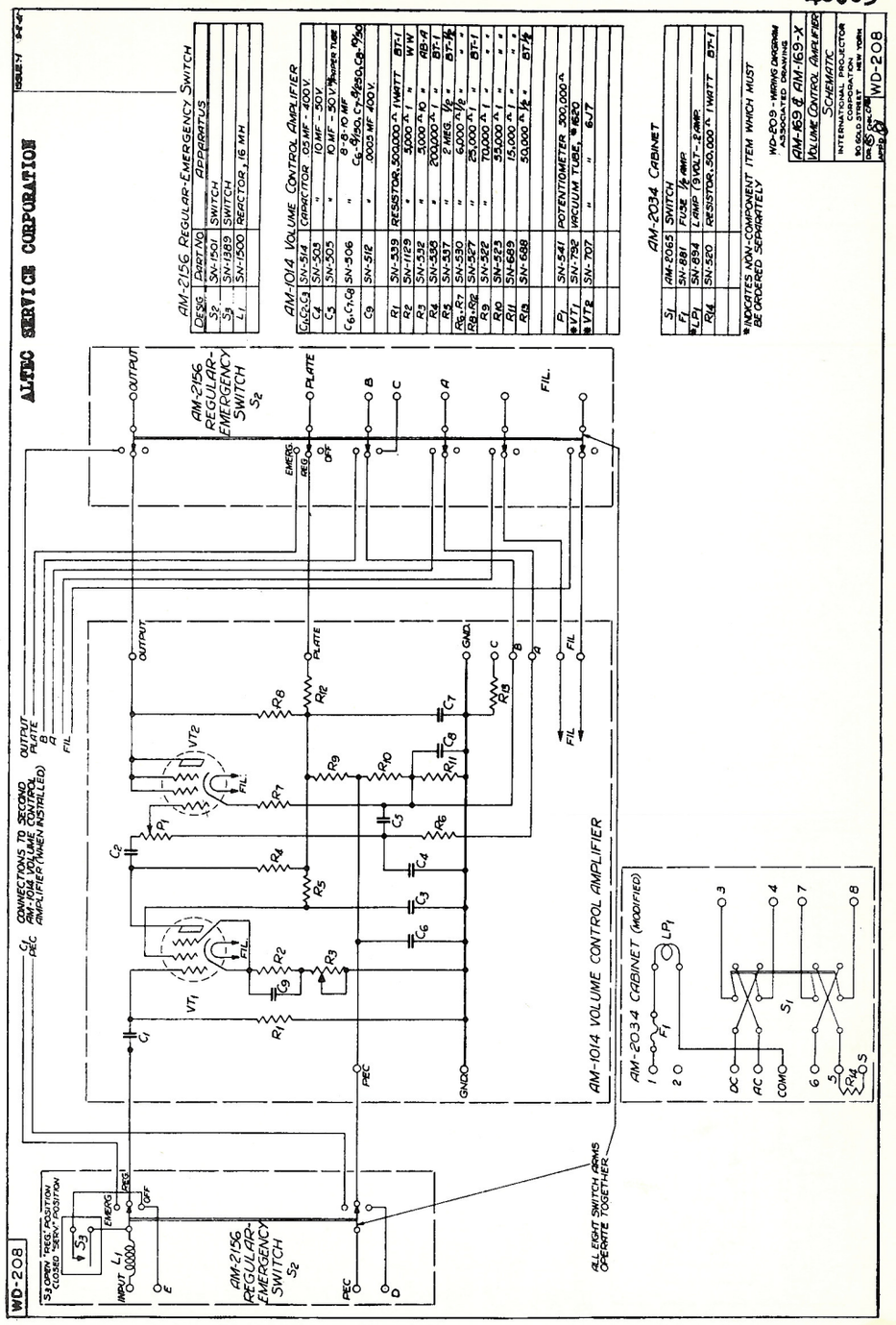

Printed in U.S.A.

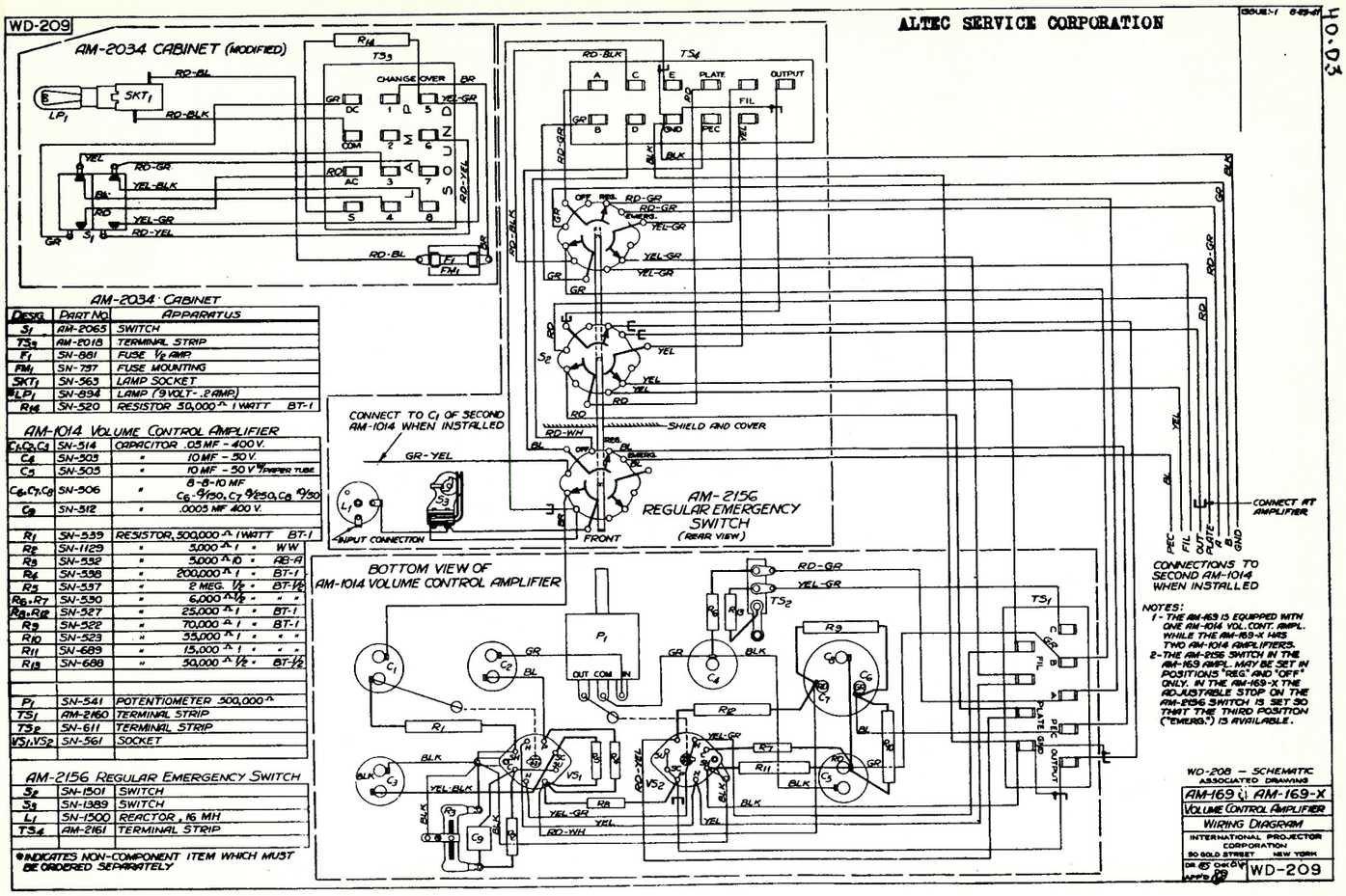

DESIG.	PART NO.	APPARATUS
S_1	AM-2065	SWITCH
TS_3	AM-2018	TERMINAL STRIP
F_1	SN-881	FUSE ½ AMP
FM_1	SN-737	FUSE MOUNTING
SKT_1	SN-563	LAMP SOCKET
LP_1	SN-894	LAMP (9 VOLT-.2 AMP)
R_{14}	SN-520	RESISTOR 30,000 Ω 1 WATT BT-1

AM-1014 VOLUME CONTROL AMPLIFIER

C_1, C_2, C_3	SN-514	CAPACITOR .05 MF - 400 V.
C_4	SN-503	" 10 MF - 50 V.
C_5	SN-505	" 10 MF - 50 V. (PRINTED TUBE)
C_6, C_7, C_8	SN-506	" 8-8-10 MF C_6 9/150, C_7 9/250, C_8 9/50
C_9	SN-512	" .0005 MF 400 V.
R_1	SN-539	RESISTOR, 500,000 Ω 1 WATT BT-1
R_2	SN-1129	" 5,000 Ω 1 " WW
R_3	SN-552	" 5,000 Ω 10 " AB-A
R_4	SN-558	" 200,000 Ω 1 " BT-1
R_5	SN-537	" 2 MEG. ½ " BT-½
R_6-R_7	SN-530	" 6,000 Ω ½ " " "
R_8-R_{12}	SN-527	" 25,000 Ω 1 " BT-1
R_9	SN-522	" 70,000 Ω 1 " BT-1
R_{10}	SN-523	" 35,000 Ω 1 " " "
R_{11}	SN-689	" 15,000 Ω 1 " " "
R_{13}	SN-688	" 50,000 Ω ½ " BT-½
P_1	SN-541	POTENTIOMETER 500,000 Ω
TS_1	AM-2160	TERMINAL STRIP
TS_2	SN-611	TERMINAL STRIP
VS_1, VS_2	SN-561	SOCKET

AM-2156 REGULAR EMERGENCY SWITCH

S_2	SN-1501	SWITCH
S_3	SN-1389	SWITCH
L_1	SN-1500	REACTOR, 16 MH
TS_4	AM-2161	TERMINAL STRIP

*INDICATES NON-COMPONENT ITEM WHICH MUST BE ORDERED SEPARATELY

Printed in U.S.A.

1. DESCRIPTION.

The AM-170 consists of an AM-1015 NS-Amplifier, an AM-2157 Switch and an AM-2158 NS-ANN Switching Attachment in a wall mounting metal cabinet 12½" high x 9" wide x 6½" deep, total weight 12 lbs. The cabinet is surface mounted for exposed conduit installations and may be partially recessed in the wall when the conduit is concealed.

A. The AM-1015 NS-Amplifier is a two-stage, resistance coupled, inverse feedback amplifier using one #1620 and one 6J7 tube, which are furnished separately. The #1620 is a low noise level tube and should be installed in the first stage. The maximum gain is 46 db., input impedance 250,000 ohms, output impedance 10,000 ohms. It contains a main system volume control, consisting of a potentiometer having twenty 2 db steps, which regulates the volume by varying the signal voltage applied to the grid of the second tube.
An adjustable resistor (R_3), range 6 db., is provided in the cathode circuit of the first tube of the amplifier for adjustment of the gain of the amplifier. Plate and filament supply are obtained from the power amplifier. A terminal strip on an external cable form is provided for external connections.

B. The AM-2157 Switch is a two-position selector switch which provides for the isolation of the AM-1015 Amplifier in case it becomes inoperative, thereby rendering it available for immediate servicing.

C. The AM-2158 NS-ANN Switching Attachment consists of a three-position selector switch and knob, two single circuit jacks and four resistors on a suitably engraved plate. A terminal strip on an extension cable form is provided for external connections. The AM-2158 selects any one of three inputs; film in middle position, microphone in left position (500,000 ohms) and turntable in right position (500 ohms).

2. INSTALLATION.

The AM-170 should be located in a convenient position in the projection room, preferably adjacent to the turntable when one is used. Connections to the terminal strips should be made according to the system wiring diagram.

3. OPERATION.

A. AM-2158 NS-ANN Switching Attachment.

1. Film Reproduction. Set the selector switch in "FILM" position, system operation is normal and the special inputs are disconnected.

2. Microphone or Turntable Reproduction. Set the selector switch in left or right position respectively and adjust the volume control for proper auditorium level. If plug connections are used, be sure the plug is in the jack. With the switch in either left or right position, both sound mechanisms and their associated volume control amplifiers are inoperative.

B. AM-2157 Switch.

1. Normal. Set the selector switch in "ON" position.

Issued by
Engineering Department
Printed in U.S.A.

Issue #1
November 22, 1944

2. Emergency. Set the selector switch in "OFF" position if the AM-2015 Amplifier becomes inoperative. Since input, output, plate and filament are disconnected, the amplifier is completely isolated an may be serviced without interfering with the operation of the sound system.

4. MAINTENANCE.

A. Vacuum Tubes. The prongs should make good contact and should be clean and bright. Careful bending of the socket contacts may be resorted to and the prongs burnished with crocus cloth, if necessary, to provide good contact.

B. Capacitors. Check all clamping rings and nuts periodically and tighten if necessary.

5. ASSOCIATED DRAWINGS. WD-210 Schematic.
WD-211 Wiring Diagram.

WD-210

ALTEC SERVICE CORPORATION

ISSUE:-1 8-10-41

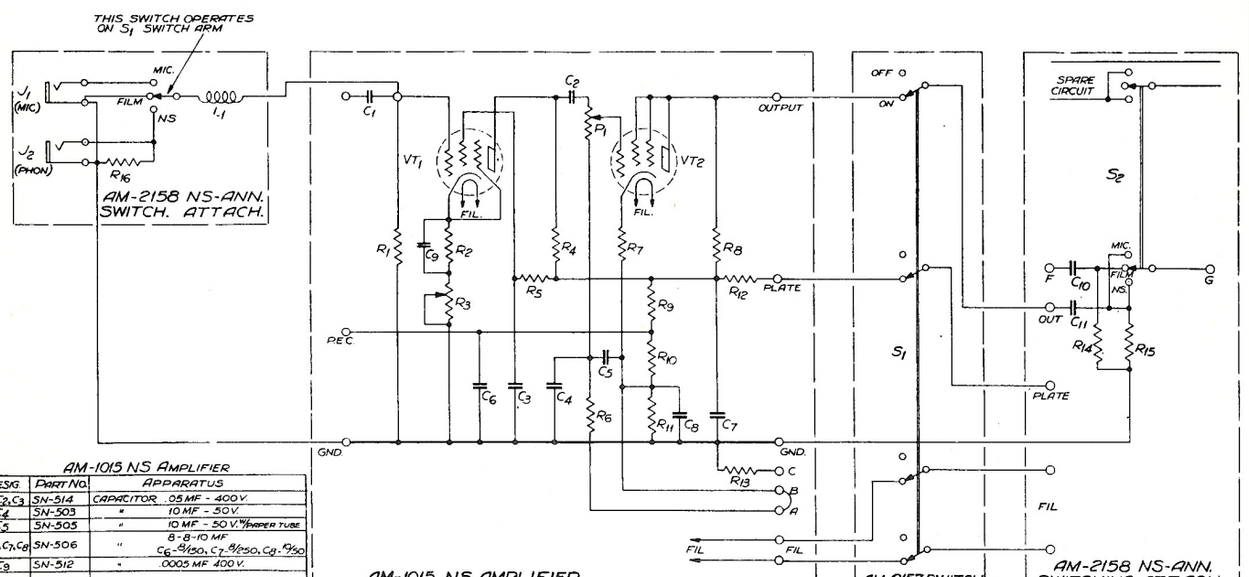

AM-1015 NS Amplifier

DESIG.	PART NO.	APPARATUS	
C1,C2,C3	SN-514	CAPACITOR .05 MF - 400 V.	
C4	SN-503	" 10 MF - 50 V.	
C5	SN-505	" 10 MF - 50 V. *RAYTHEON TUBE	
C6,C7,C8	SN-506	" 8-8-10 MF C6-8/150, C7-8/250, C8-10/50	
C9	SN-512	" .0005 MF 400 V.	
R1	SN-539	RESISTOR, 500,000 Ω 1 WATT	BT-1
R2	SN-1129	" 3,000 Ω 1 "	WW
R3	SN-532	" 5,000 Ω 10 "	AB-A
R4	SN-538	" 200,000 Ω 1 "	BT-1
R5	SN-537	" 2 MEG. 1/2 "	BT-1/2
R6,R7	SN-530	" 6,000 Ω 1/2 "	" "
R8	SN-1496	" 12,500 Ω 1 "	BT-1
R9	SN-522	" 70,000 Ω 1 "	BT-1
R10	SN-523	" 55,000 Ω 1 "	" "
R11	SN-689	" 15,000 Ω 1 "	" "
R12	SN-527	" 25,000 Ω 1 "	" "
R13	SN-688	" 50,000 Ω 1/2 "	BT-1/2
P1	SN-541	POTENTIOMETER 500,000 Ω	
* VT1	SN-792	VACUUM TUBE, *1620	
* VT2	SN-707	" " 6J7	

*INDICATES NON-COMPONENT ITEM WHICH MUST BE ORDERED SEPARATELY

AM-2158 NS-Ann. Switching Attachment

C10,C11	SN-788	CAPACITOR .01 MF
J1,J2	SN-610	JACK
L1	SN-1500	REACTOR, 16 MH
R14,R15	SN-537	RESISTOR, 2 MEG. 1/2 WATT BT-1/2
R16	SN-1030	" 500 Ω 1 WATT BT-1
S2	SN-1497	SWITCH

AM-2157 Parts List

S1	SN-1498	SWITCH

WD-211 WIRING DIAGRAM ASSOCIATED DRAWING

AM-170
NS AMPLIFIER ASSEMBLY
SCHEMATIC

INTERNATIONAL PROJECTOR CORPORATION
90 GOLD STREET NEW YORK

DR BS CHK. DB APPD. EJ

WD-210

10.03

Printed in U.S.A.

WD-211

ALTEC SERVICE CORPORATION

ISSUE-1 9-62

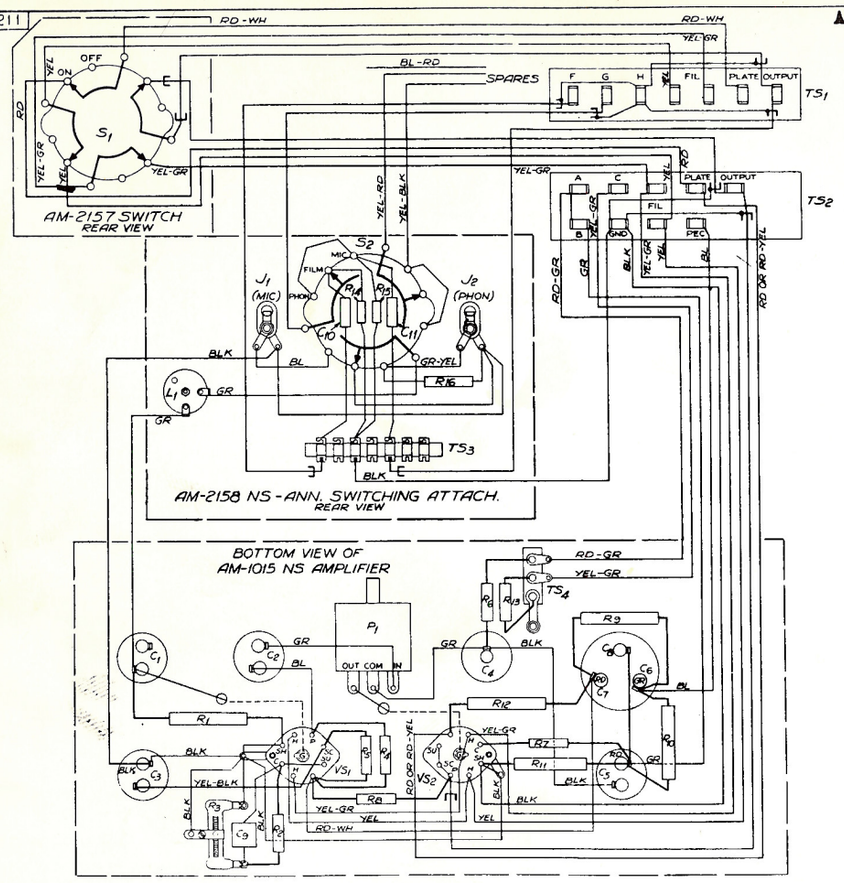

AM-2157 Switch

Desig.	Part No.	Apparatus
S1	SN-1498	Switch

AM-2158 NS-Ann. Switching Attachment

C10, C11	SN-788	Capacitor, .01 MF	
J1, J2	SN-610	Jack	
L1	SN-1500	Reactor, 16 MH	
R14, R15	SN-537	Resistor, 2 MEG.	½ watt BT-½
R16	SN-1030	" 500Ω	1 watt BT-1
S2	SN-1497	Switch	

AM-1015 NS Amplifier

C1, C2, C3	SN-514	Capacitor, .05 MF - 400 V.	
C4	SN-503	" 10 MF - 50 V.	
C5	SN-505	" 10 MF - 50 V. Paper Tube	
C6, C7, C8	SN-506	" 8-8-10 MF C6-C7-50, C8-C50	
C9	SN-512	" .0005 MF 400 V.	
R1	SN-539	Resistor, 500,000Ω 1 watt	BT-1
R2	SN-1129	" 3,000Ω 1 "	WW
R3	SN-532	" 5,000Ω 10 "	AB-A
R4	SN-538	" 200,000Ω 1 "	BT-1
R5	SN-537	" 2 MEG. ½ "	BT-½
R6, R7	SN-530	" 6,000Ω ½ "	BT-½
R8	SN-1496	" 12,500Ω 1 "	BT-1
R9	SN-522	" 70,000Ω 1 "	" "
R10	SN-523	" 53,000Ω 1 "	" "
R11	SN-689	" 15,000Ω 1 "	" "
R12	SN-527	" 25,000Ω 1 "	" "
R13	SN-688	" 50,000Ω ½ "	BT-½
P1	SN-541	Potentiometer 500,000Ω	
VS1, VS2	SN-561	Socket	
TS1	AM-2162	Terminal Strip	
TS2	AM-2163	" "	
TS3	SN-571	" "	
TS4	SN-611	" "	

WD-210 - SCHEMATIC
ASSOCIATED DRAWING
AM-170
NS AMPLIFIER
WIRING DIAGRAM
INTERNATIONAL PROJECTOR CORPORATION
90 GOLD STREET NEW YORK
DR BS CHK CE APP'D
WD-211

Printed in U.S.A.

1. DESCRIPTION - The AM-1001 is an AC operated chassis type, two stage plus phase inverter, negative feedback, push-pull output power amplifier designed for use in moving picture sound systems. It mounts in the AM-2023 cabinet and is furnished with two terminal strips on extension cable forms for external connections. An adjustable warping circuit is provided in the feedback loop to vary the high and low frequency response as may be required.

2. CHARACTERISTICS -

Gain	60 DB max.
Volume Control	Continuously adjustable (12 DB) - screwdriver adjustment.
Impedance.	Input (source) 10,000 ohms Output (load) Refer to Section 3.2 (Transformer taps 12 and 24 ohms)
Power Output	15 Watts, 34 DB; 41.8 DBM.
Frequency Response	Refer to Section 3.8 and Dwg. SC-21.
Noise Level.	-35 DB; -27.2 DBM
Vacuum Tubes	2 - 6J7, 2 - 6L6G, 1 - 5Z3
Power Supply Required. . . .	105-125V AC, 50-60 cycle, 115 Watts.
Power Supply Furnished . . .	Heater and plate supply for AM-1000 Volume Control Amplifier and AM-1003 Monitor Amplifier.
Dimensions	7-1/2"H x 17"W x 10"D.
Weight	30 lbs.

3. INSTALLATION INSTRUCTIONS

3.1 Power Transformer Connection.

Average Line Voltage	Connect to T_2 Tap
120 - 130	125 V (Connection as shipped)
110 - 120	115 V
100 - 110	105 V

3.2 Output Transformer Connections - All Systems - For optimum power output with a nominal 12 ohm speaker load the "output" wire should connect to the "24 ohm" transformer terminal and the "feedback" wire to the "12 ohm" termonal.
Note: Use TJ-403-A Matching Auto-Transformer with 60 watt system when supplied with Voice of the Theatre Speaker System, connected as follows, WH - common, BR - amplifier output, RD - network input.

3.3 Resistor R_3 (2000 ohms) - When only one amplifier operates at a time, this resistor should be strapped out (as shipped). When two amplifiers normally operate in parallel, the strap (Jumper from R_3 to R_8) should be removed in each amplifier to maintain a constant impedance.

3.4 Resistor R_2 (2000 ohms) - When four amplifiers normally operate in parallel, this resistor should be replaced by an SN-1013 Resistor (8000 ohms) to maintain constant impedance. No wiring changes are necessary.

3.5 Strap Between Terminals "RVC 3" and "RVC 4" - When only one amplifier operates at a time, this strap should be connected. When two or more amplifiers operate in parallel, disconnect this strap as the amplifier selector switch, supplied in such cases, makes the necessary connections to these terminals.

3.6 Gain Control - The gain control of each amplifier in the system should have the same setting, and be adjusted to obtain adequate volume level in the specific auditorium in accordance with Equipment Bulletin "AM-101 Volume Control Amplifier". Counter-clockwise rotation increases the volume. The setting should be as low as possible and never in the extreme counter-clockwise position.

3.7 Vacuum Tubes.- The grid leads of the 6J7 Vacuum Tubes, VT_1 and VT_2 , should be wrapped around the tubes in such a manner that the grid caps do not point toward the 6L6 Tubes, VT_3 and VT_4 .

3.8 Warping Circuit Adjustments - The following tabulation shows typical system response for L-2 H-2 strapping (as shipped) and variations that may be obtained, from L-2, H-2, through the use of alternate warping circuit connections.

Issued by
Engineering Department
Printed in U. S. A.

June 18, 1948
Issue #2

3.8 Warping Circuit Adjustments (Cont'd.)

SIMPLEX SYSTEM RESPONSE - L-2, H-2 STRAPPING,
With 20' EW 633 Plastic Microphone Cable (Federal), or 15'
Belden 8401 Cable between front wall and system amplifier*
24 Ohm Tap: 12 Ohm Resistive Load; 12 Ohm F.B.

Cycles	40	70	130	300	500		2K	3K	5K	7K	8K
Response	3.9	3.2	1.8	0.8	0.5		-1.2	-2.5	-6.2	-12.1	-15.9

As Shipped

AVAILABLE DEVIATIONS FROM L-2 - H-2 (Refer to Dwg. SC-21 for Strapping)

LOW						HIGH					
a	4.7	4.7	3.1	1.1	0.3	j	0.8	1.8	4.3	8.0	9.8
L-1	3.8	2.8	1.3	0.4	0.2	k	0.1	0.2	1.1	3.3	5.0
L-2	0	0	0	0	0	H-1	0.9	2.0	4.0	4.1	3.8
b	0.7	-0.2	-0.5	0	0	l	-0.3	-0.9	-2.2	-2.8	-2.6
b-1 (C1 only)	-2.8	-2.1	-1.2	-0.2	0	m	-0.2	-0.6	-1.4	-1.2	-0.6
c	-3.2	-1.7	-0.9	0	0	n	1.0	2.0	2.9	1.3	0.6
d	1.5	2.3	1.6	0.6	0.3	o	0.9	1.6	0.6	-2.1	-2.9
e	0.6	1.1	0.7	0.4	0.2	p	0.7	0.7	-2.0	-5.3	-6.1
f	0.3	2.3	2.5	1.5	0.5	q	0.5	0.2	-3.0	-6.3	-7.0
g	-7.8	-3.0	-0.1	0.9	0.4	H-2	0	0	0	0	0
L-3	-5.7	-3.1	-1.6	-0.1	0	H-2a (C16 only)	0.2	0.2	0.9	1.7	2.4
h	-7.9	-5.3	-3.0	-0.5	-0.2	H-2b (C16 & C18)	0	0	-0.4	-0.8	-1.0
L-4	-9.2	-5.0	-2.3	-0.3	-0.1	H-3	0	-0.3	-1.3	-2.5	-2.8
i	-13.9	-8.7	-4.4	-0.8	-0.3	r	0	-0.9	-3.1	-5.1	-5.7
						H-4	0	-1.4	-4.1	-6.4	-7
* For additional 10' EW633 or 8' Belden 8401 add							-0.1	-0.2	-0.4	-0.6	-0.7

Note: Add deviation values algebraically to L-2 - H-2 to obtain system response for various warping connections. Any LOW end curve may be used with any HIGH end curve. With some combinations there may be interaction (not exceeding 1 DB) between LOW and HIGH curves.

4. OPERATION AND MAINTENANCE

4.1 Dual or Emergency Amplifiers - When two or more amplifiers normally operate in parallel, or emergency amplifier equipment is installed, a selector switch is supplied to disconnect the output, external heater and plate circuits and warping circuit of the inoperative amplifier(s) and connect similar circuits of the operative amplifier(s). Only one warping circuit is used at a time. The input is not disconnected.

4.2 Frequency Response and Power Output Measurements - Recommended test load under all conditions is 12 ohms. Dummy load resistor in network should be connected for this value.

4.3 Plate Meter - Slight movement of the pointer of the plate current meter may be observed before overload. It may occur as much as 8 db before full load and is <u>not an indication</u> of distortion in the output stage but merely of variation in signal strength.

4.4 Vacuum Tube Testing (Plate Meter)

(1) General conditions -

		Meter Readings				
To Test	VT - SW. Pos.	GR 1 & 2	RD 1	RD 2	GR 3 & 4	RD 3 or 4
VT-1 & VT-2	1-2	Good	VT-1 Bad	VT-2 Bad	-	-
VT-3 & VT-4	3-4	-	-	-	Good	Bad See Note

Note: Remove one tube at a time and replace tube giving deflection below "RD 3 or 4".

(2) Border line cases - VT-1 & VT-2 -

		Meter Reading	
To Test	Remove	RD 1	RD 2
VT-1	VT-2	Bad	Good
VT-2	VT-1	Good	Bad

Caution: To avoid disturbances in system, remove tube with grid cap attached. Replace grid cap before reinstalling tube.

(3) Replace 5Z3 Rectifier Tube if reading is below both "GR 1 & 2"and "GR 3 & 4" in the above tests.

ASSOCIATED DRAWINGS

WD-101 SCHEMATIC
WD-113 WIRING DIAGRAM
SC-21 FREQUENCY RESPONSE CHARACTERISTICS

Issued by
Engineering Department
Printed in U. S. A.

June 18, 1948
Issue #2

ALTEC SERVICE CORPORATION
SIMPLEX

AM-1001 AMPLIFIER

WD-101

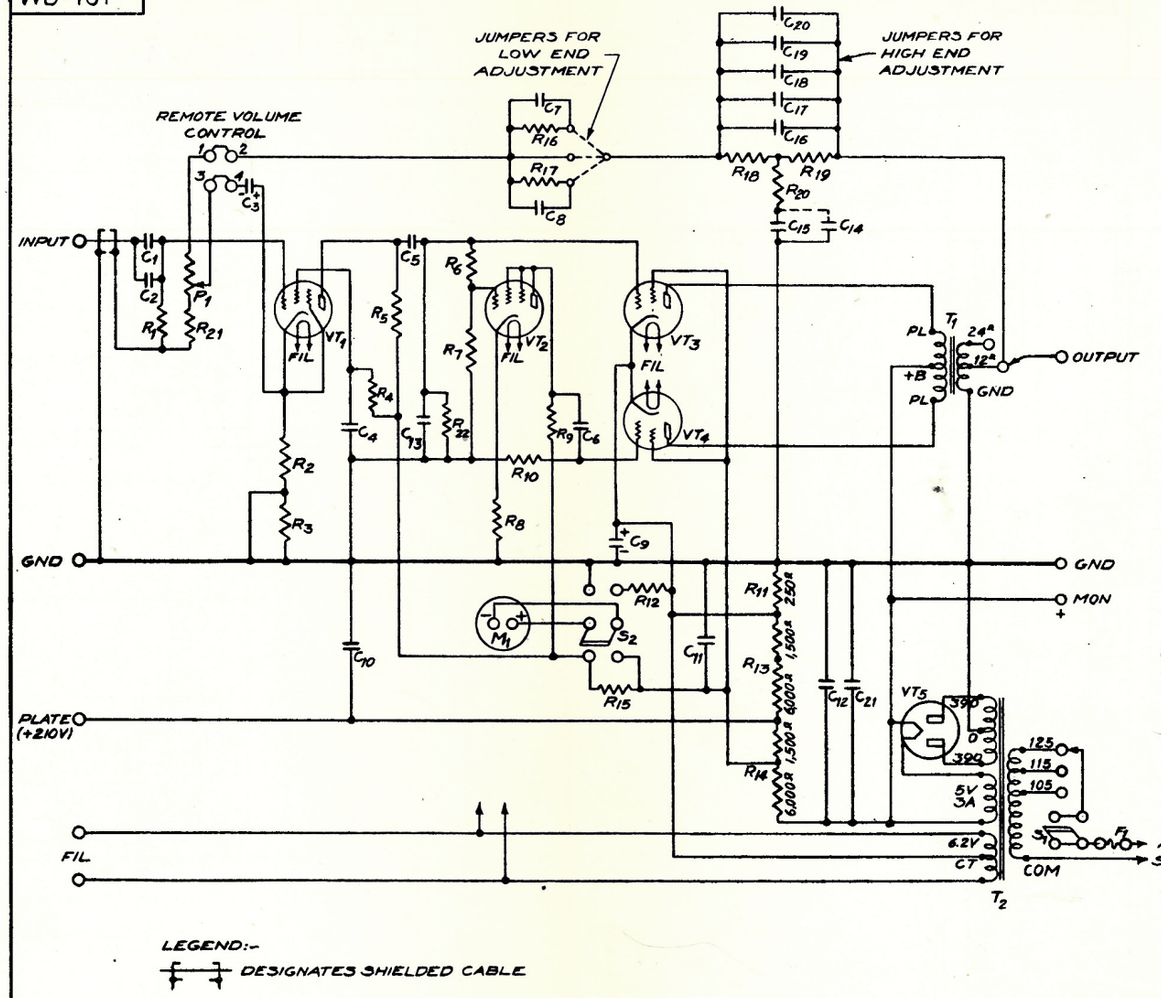

LEGEND:-

DESIGNATES SHIELDED CABLE

DESIG.	PART No.	APPARATUS
C12,14,15	SN-515	.005MF-500V CAPACITOR
C3	" 504	25MF-25V " (WITH PAPER TUBE)
C4,5,6	" 514	.05MF-400V CAPACITOR
C7	" 511	.1MF-200V "
C8	" 510	.2MF- " "
C9	" 502	25MF-50V "
(D) C10,11	" 507	~~250~~ 20-300 "
C12,21	" 508	4MF-600V "
C13	" 516	.0003MF-500V "
C16,18	" 581	.0007.5MF- " "
C17,20	" 512	.0005MF " "
C19	" 582	.001 MF " "
R1,5,6	" 539	500,000Ω 1 WATT RESISTOR
R2,3	" 1130	2,000Ω " " (WIRE WOUND)
R4	" 517	2 MEG " "
R7	" 521	75,000Ω " "
R8	" 533	2,500Ω " "
R9	" 520	50,000Ω " "
R10	" 580	250,000Ω " "
R11	" 535	250Ω 10 WATT "
(D) R12	" 971	43,500Ω 1 WATT "
R13,14	" 529	7,500Ω 17 WATT " TAPPED AT 1,500Ω
R15	" 536	46Ω 1 WATT RESISTOR (WIRE WOUND)
R16	" 604	75,000Ω 1/2 WATT "
R17	" 526	30,000Ω " "
R18,19	" 528	7,500Ω " "
R20	" 772	500Ω " "
R21	" 613	280Ω " "
R22	" 539	500,000Ω " "
P1	" 583	1720Ω 2 WATT POT. I.R.C. TYPE CPS WITH TAPER "A"
(A) S1	" 608	D.P.S.T. SWITCH
(B) S2	" 988	D.P.D.T. "
T1	" 575	OUTPUT TRANSFORMER
T2	" 576	POWER "
VT1,VT2	" 707	6J7 METAL VACUUM TUBE
VT3,VT4	" 706	6L6G VACUUM TUBE
VT5	" 708	5Z3 VACUUM TUBE
M1	" 556	WESTON D.C. MILLIAMETER MODEL-301
F1	" 549	#702 FUSETRON (2-AMP)

ISSUE
REDRAWN FROM ISSUE #4 WITH THE FOLLOWING CHANGES
(A) SN-608 WAS SN-566
(B) SN-988 WAS SN-565
(C) NOTE 2 REVISED NOTES 2,3 ADDED
(D) SUPPLIER'S OF CAPACITORS & RESISTORS REMOVED
AN | CPR | [signature]
ISSUE # 5 10-22-41
ADDED CONNECTION SYMBOL "•" AT INTERSECTION OF 6 TERMINAL OF T2, GND OF T1 & CHASSIS GROUND.
WO/n | [signature] | [signature]
ISSUE. 6 4-13-46

1. AMPLIFIERS FROM 1289 UP ARE AS SHOWN.
2. SCHEMATIC OF AMPLIERS Nos 151, 152, 162, 207, 210, 221, 227 230, 238, 347, 418, 431, 432, 433, 434, 436, 491, AND FROM 509 TO 1288 ARE AS SHOWN EXCEPT THAT S_1 AND S_2 ARE SN-566 AND SN-565 RESPECTIVELY. (C)
3. REFER TO WD-113 (AM-1001 AMPLIFIER, WIRING DIAGRAM) FOR WIRING CHANGES IN OTHER AMPLIFIERS WHEN IMPROVED OPERATION IS DESIRED.

UNLESS OTHERWISE SPECIFIED
TOLERANCES OF ALL FRACT. DIM. TO BE ± 1/64
TOLERANCES OF ALL DECIMAL DIM. TO BE ± .005

SCALE

AM-1001 AMPLIFIER
POWER AMPLIFIER
SCHEMATIC
INTERNATIONAL PROJECTOR CORPORATION
90 GOLD STREET NEW YORK
DR AN CHK
APPD
WD-101

ALTEC SERVICE CORPORATION
SIMPLEX

WD-113

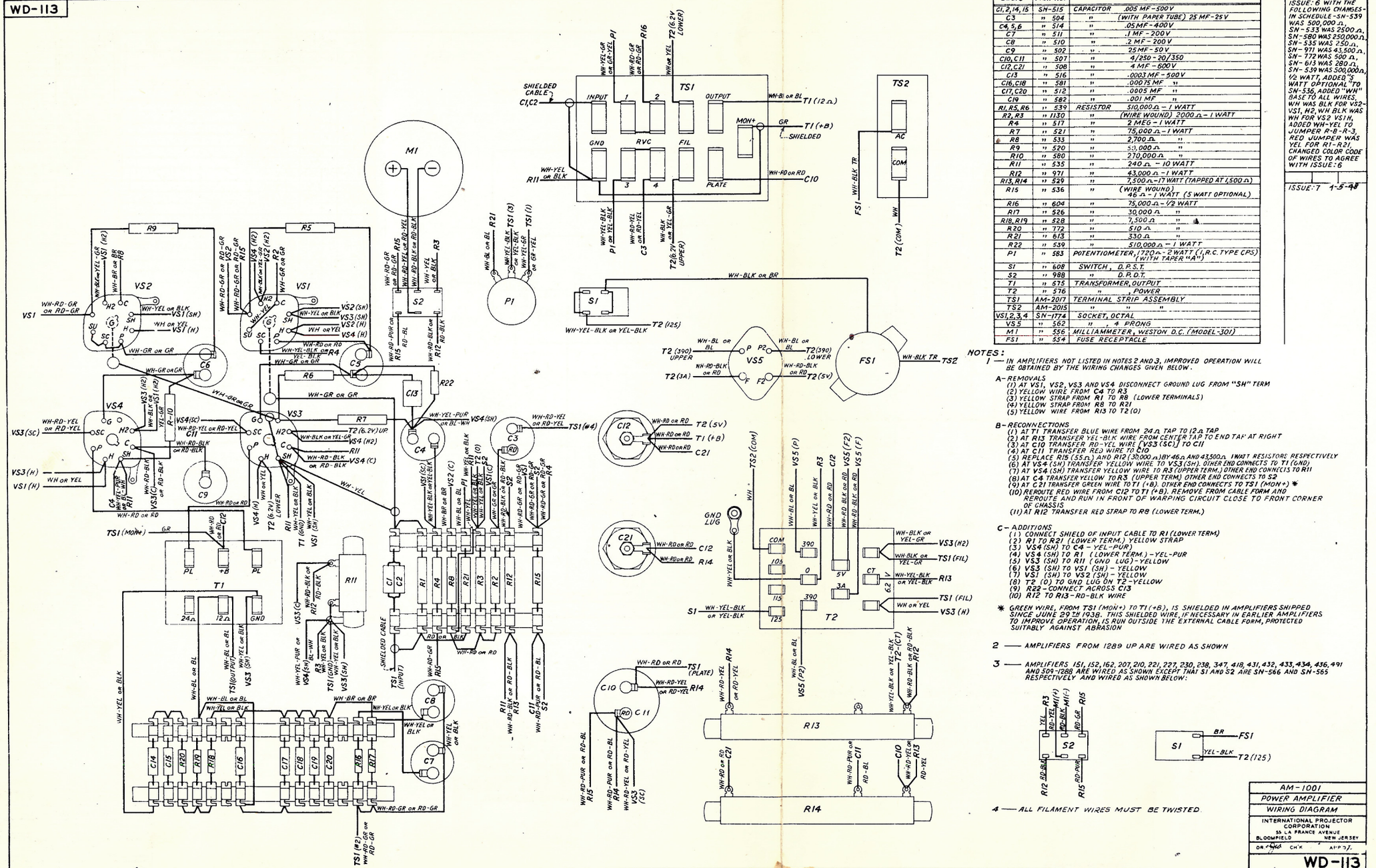
M1
TS1
TS2
INPUT
OUTPUT
GND
RVC
FIL
PLATE
MON+
SHIELDED CABLE C1,C2
T1 (12Ω)
T1 (+B)
SHIELDED
T2 (6.2V LOWER)
T2 (6.2V UPPER)
T2 (COM)
T2 (5V)
T2 (125)
T2 (390) UPPER
T2 (390) LOWER
T2 (3A)
T2 (5V)
P1
S1
S2
VS1
VS2
VS3
VS4
VS5
FS1
R1
R2
R3
R4
R5
R6
R7
R8
R9
R10
R11
R12
R13
R14
R15
R21
R22
C1
C2
C3
C4
C5
C6
C7
C8
C9
C10
C11
C12
C13
C14
C15
C16
C17
C18
C19
C20
C21
T1
T2
PL
+B
GND
24Ω
12Ω
SHIELDED CABLE
TS1 (MON+)
TS1 (PLATE)
TS1 (INPUT)
TS1 (#2)
TS1 (#1)
TS1 (FIL)
TS1 (GND)
TS1 (+B)
TS2 (COM)
VS1 (H)
VS1 (SH)
VS2 (H)
VS2 (SH)
VS3 (H)
VS3 (SH)
VS4 (H)
VS4 (SH)
VS4 (SC)
VS4 (C)
VS5 (P)
VS5 (F)
VS5 (F2)
VS5 (P2)
VS3 (SC)
VS3 (C)
VS1 (SC)
VS1 (C)
VS2 (SC)
VS2 (C)
T2 (6.2V) UP
T2 (6.2V) LOWER
T2 (5V)
T1 (+B)
T2 (C)
T2 (CT)
T2 (GND)
T2 (0)
FS1 TR
WH-BLK TR
TS2
AC
COM
FS1 WH-BLK TR
T2 (COM) WH
GND LUG
COM
390
104
0
5V
3A
6.2 V
115
125
CT
R13
R14
S1 WH-YEL-BLK or YEL-BLK
WH-BLK or YEL-GR
WH-YEL-BLK or YEL-BLK
WH or YEL
WH-BLK or BR
WH-BL or BL
WH-YEL or BLK
WH-RD-BLK or RD-BLK
WH-RD-GR or RD-GR
WH-RD-YEL or RD-YEL
WH-RD-PUR or RD-BL
WH-BR or BR
WH-GR or GR
WH-YEL-PUR or BL-WH
WH-RD or RD
WH-RD-BLK or RD
WH-RD-GR or RD-GR
WH-RD-YEL or RD-YEL
WH-BL or BL
WH-YEL or BLK
WH-YEL-BLK or YEL-

ALTEC SERVICE CORPORATION
SIMPLEX

AM-1001 AMPLIFIER - SPECIAL

WD-177

ISSUE 10-14-40

DESIG.	PART No.	APPARATUS
C1,2,14,15	SN-515	.005MF-500V CAPACITOR
C3	504	25MF-25V " (WITH PAPER TUBE)
C4,5,6	514	.05MF-400V CAPACITOR
C7	511	.1MF-200V "
C8	510	.2MF- " "
C9	502	25MF-50V "
C10,11	507	2-20-250-350 "
C12,21	508	4MF-600V "
C13	516	.0003MF-500V "
C16,18	581	.00075MF- " "
C17,20	512	.0005MF- " "
C19	582	.001MF- " "
R1,5,6	539	500,000Ω 1 WATT RES. I.R.C. TYPE BT-1
R2,3	1130	2000Ω " " " BW-1
R4	517	2MEG " " " BT-1
R7	521	75,000Ω " " " " "
R8	533	2,500Ω " " " " "
R9	520	50,000Ω " " " " "
R10	580	250,000Ω " " " " "
R11	535	250Ω 10 WATT " " MW-2
R12	1382	17Ω 1 WATT " " BW-1
R13,14	529	7,500Ω 17 WATT " " MW-5 TAPPED AT 1,500Ω
R15	536	46Ω 1 WATT RES. I.R.C. TYPE BW-1
R16	604	75,000Ω ½ WATT " " BT-½
R17	526	30,000Ω " " " "
R18,19	528	7,500Ω " " " "
R20	772	500Ω " " " "
R21	613	280Ω 1 WATT " " BT-1
R22	539	500,000Ω " " " "
R23	1384	1,720Ω " " " "
R24,25	1383	250,000Ω " " " "
R26	1385	500,000Ω " " " "
R27	1387	1000Ω " " " BW-1
R28,29	1388	20Ω " " " BW-1
S1	608	D.P.S.T SWITCH
S2	1386	SWITCH, SELECTOR
S3	1389	SWITCH, MIDGET JACK
T1	575	OUTPUT TRANSFORMER
T2	576	POWER TRANSFORMER
VT1,2	707	6J7 METAL VACUUM TUBE
VT3,4	706	6L6G VACUUM TUBE
VT5	708	523 VACUUM TUBE
M1	1392	WESTON D.C. MILLIAMETER MODEL-301
F1	549	#702 FUSETRON (2-AMP)

JUMPERS FOR LOW END ADJUSTMENT
JUMPERS FOR HIGH END ADJUSTMENT
REMOTE VOLUME CONTROL
SHIELDED CABLE
INPUT
LOW
HIGH
OUTPUT
PLATE (+210V.)
MON +
GND
FIL
A.C. SUPPLY
COM

AM-1001 AMPLIFIER	
INDIVIDUAL TUBE TESTING	
SCHEMATIC	
INTERNATIONAL PROJECTOR CORPORATION	
90 GOLD STREET NEW YORK	
DR AH CHK CFR APP'D	WD-177

40.03

ALTEC SERVICE CORPORATION

AM-1001 AMPLIFIER - SPECIAL

SIMPLEX

WD-178

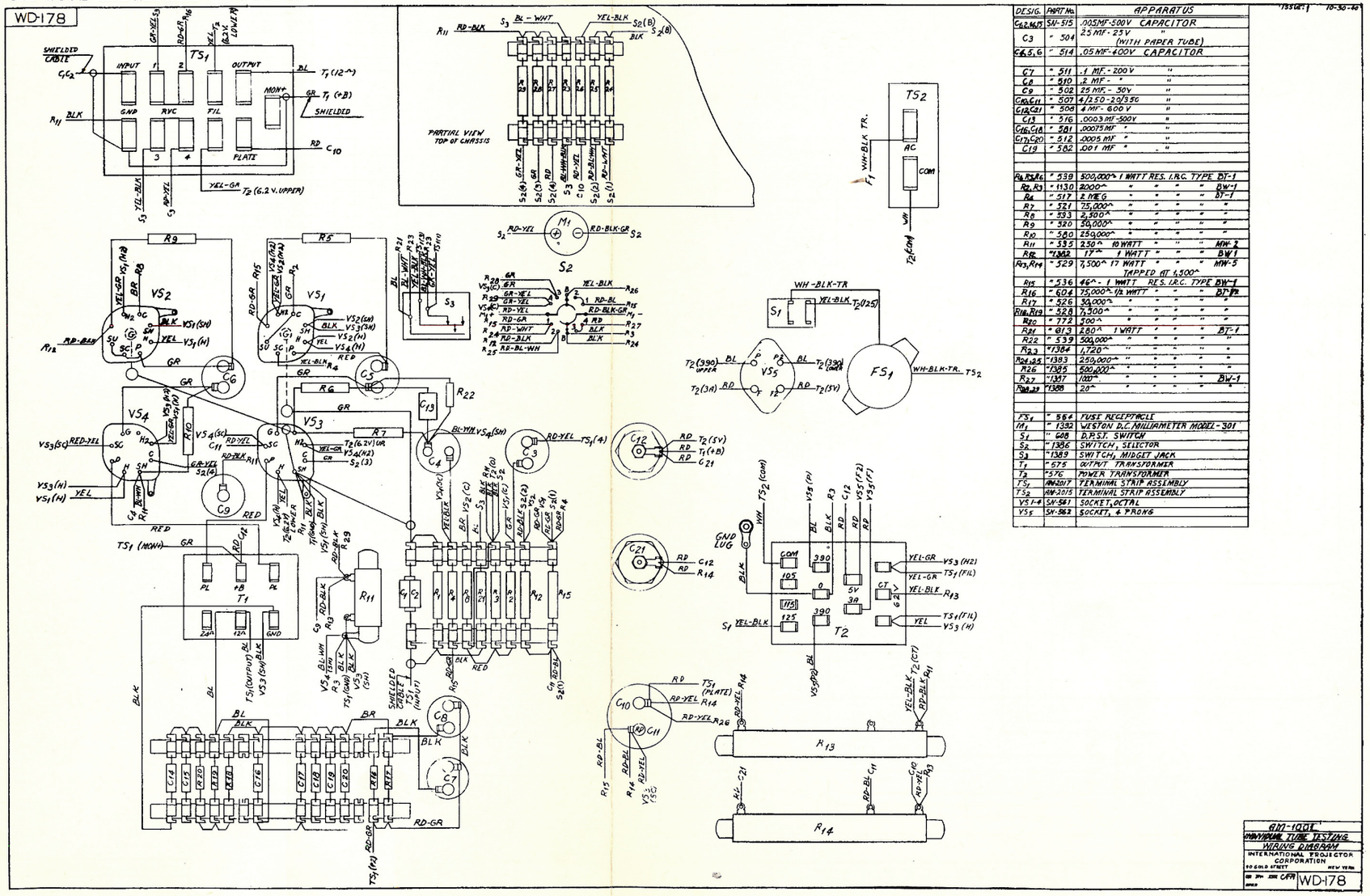

1. CHARACTERISTICS - COMPONENTS - DRAWINGS.

Type - Chassis Type. Single stage push pull.
Gain - 16 db
Output - 6 watts
Input Impedance - 50 ohms
Output Impedance- 50 ohms
Vacuum Tubes - One 6N7
Power Supply - Heater & Plate supply obtained from AM-1001 Amp.
Dimensions - 4½"H x 3"W x 7"D
Weight - 4½ lbs
Schematic & Wiring - WD-141

2. DESCRIPTION.

The AM-1003 is used as a bridging amplifier across the input of the loudspeaker network to provide added power for the monitor loudspeaker. Since it draws practically no power, the full output of the amplifiers is available for the stage speakers. It may also be used to drive auxiliary speakers and hearing aid attachments.

3. INSTALLATION.

As a monitor amplifier, the AM-1003 should be plugged into the socket on the chassis of the loudspeaker network and the two screws furnished, threaded into the tapped holes in the chassis and tightened.

NOTE:- External wires should be connected to the "Fil" and "Plate" terminals of the network per the system wiring diagram. These three wires are the heater and plate supply for the AM-1003. Refer to Equipment Bulletin LU-1018 Monitor Unit for connections to monitor loud speaker.

4. OPERATION.

Set the monitor amplifier switch on the network chassis in "ON" position, turn on the AM-1001 amplifier and the monitor amplifier is ready for operation. Adjust the monitor speaker volume control on the network panel as required.

5. EMERGENCY.

If the amplifier becomes inoperative, set the monitor amplifier switch in "OFF" position. The amplifier is disconnected and the monitor loudspeaker connected across the network input through the monitor volume control. Volume is therefore controlled in the same way as when the amplifier is used.

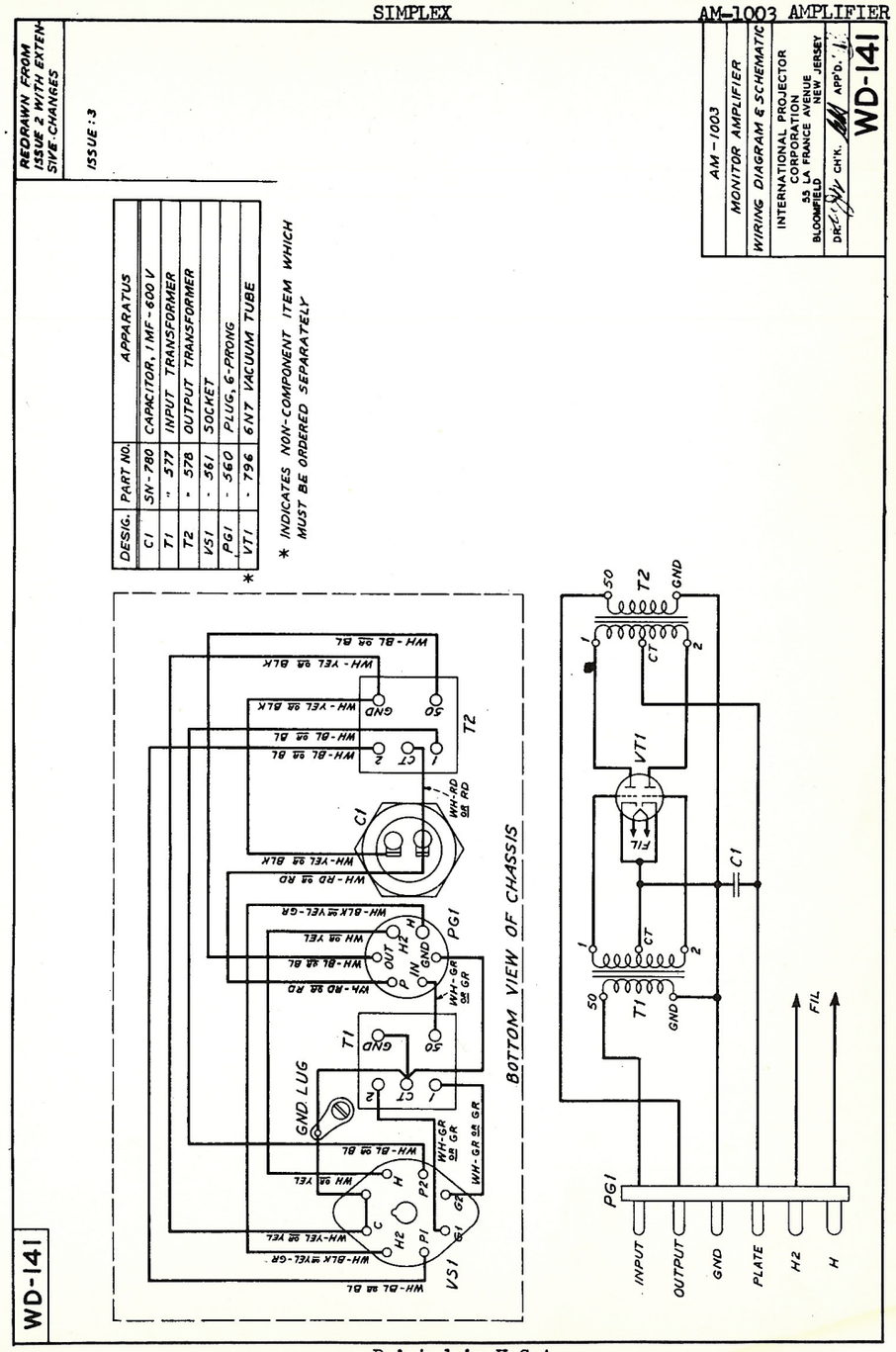
REDRAWN FROM ISSUE 2 WITH EXTENSIVE CHANGES
ISSUE : 3
AM-1003
MONITOR AMPLIFIER
WIRING DIAGRAM & SCHEMATIC
INTERNATIONAL PROJECTOR CORPORATION
53 LA FRANCE AVENUE BLOOMFIELD NEW JERSEY
DR. CH'K. APP'D.
WD-141
DESIG. PART NO. APPARATUS
C1 SN-780 CAPACITOR, 1 MF - 600 V
T1 " 577 INPUT TRANSFORMER
T2 - 578 OUTPUT TRANSFORMER
VS1 - 361 SOCKET
PG1 - 560 PLUG, 6-PRONG
VT1 - 796 6N7 VACUUM TUBE
* INDICATES NON-COMPONENT ITEM WHICH MUST BE ORDERED SEPARATELY
BOTTOM VIEW OF CHASSIS
GND LUG
INPUT
OUTPUT
GND
PLATE
H2
H
FIL
WD-141

1. CHARACTERISTICS

Type	- Chassis Type, two stage, Resistance Coupled.
Gain	- 40 db.
Input Impedance	- Two separate Input Stages - (as shipped 250,000 ohms each - one for high level and one for low level input).
Output Impedance	- 12,500 ohms.
Gain Control	- Potentiometer 20 steps - 2 db each.
Vacuum Tubes	- Two or three - 1620 Tubes
Power Supply	- Filter Plate and Filament Supply obtained from AM-1001 Amplifier.
Dimensions	- 7-1/2" high x 17" long x 10" deep.
Weight	- 15 lbs.
Accessories	- Terminal strip on cable form is provided for external connections.
Associated Drawing	- WD-166 Schematic.

2. USE

This amplifier is used as a booster amplifier for N.S. or Announcing. Where high level pickup is used, only one stage of amplification is employed. Where low level pickup is used, two stages of amplification are employed. If a low impedance, low level pickup is connected to N.S. (L) and additional gain is required, VT_1 may be added and the input impedance changed to obtain a match as described on associated drawing WD-166.

To increase the gain approximately 10 db, add a 10 mf condenser across R_2. If this is done then HF losses occasioned by the use of concealed cable instead of coaxial cable and/or N.S. switch should be corrected by condensers across C_7.

3. INSTALLATION

The AM-1009 should be installed in the AM-2023 Cabinet in the location shown on the system conduit layout drawing. Connections should be made to the terminal strip per the system wiring diagram.

4. OPERATION

Set the amplifier plate and filament switch in "ON" position, and the AM-1009 is ready for operation when the power amplifier is turned on. The volume control should be adjusted as required to obtain adequate volume with the auxiliary input in use.

5. MAINTENANCE

A. Vacuum Tubes. Tubes should be tested monthly by substituting a new tube. Tube prongs should make good contact, and should be clean and bright. Careful bending of the socket contacts may be resorted to and the prongs burnished with crocus cloth, if necessary, to provide good contact.

ALTEC SERVICE CORPORATION

SIMPLEX

AM-1009 Amp. Filter

WD-166

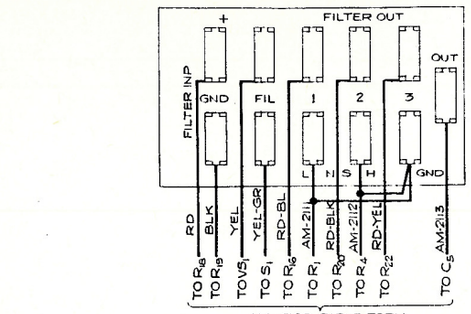

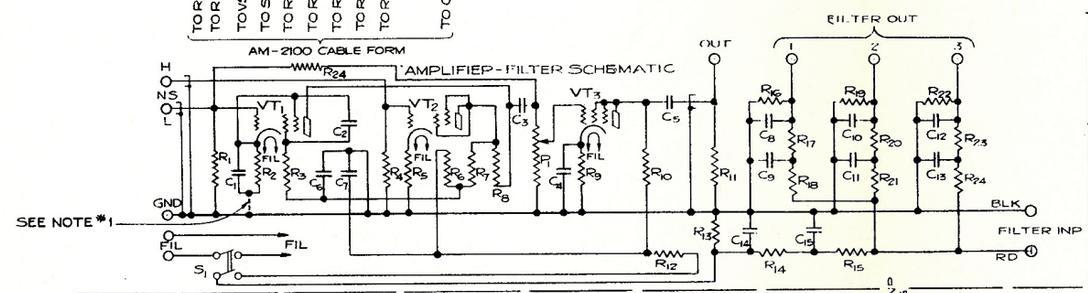

DESIGNATION	PART NO.	APPARATUS
C_1-C_4	SN-504	25 MFD. 25V CAPACITOR
C_2-C_3-C_5	SN-514	.05 MFD. 400 V.
C_6 TO C_{15}	SN-1322	8-8 MFD. 450 V. DUAL CAPAC. (C_6-C_7)(C_8-C_9)(C_{10}-C_{11})(C_{12}-C_{13})(C_{14}-C_{15})
R_2-R_9	SN-1130	2,000 Ω ✓ ✓ ✓ BT-1
R_3-R_{11}-R_{24}	SN-517	2 MEG. ✓ ✓ ✓ ✓
R_1-R_4	SN-580	250,000 Ω ✓ " " "
R_5	SN-612	10,000 Ω ½ WATT ✓ " BT-½
R_6-R_{10}	SN-111	15,000 Ω 1 WATT " " BT-1
R_7	SN-522	70,000 Ω ✓ ✓ ✓
R_8	SN-689	55,000 Ω ✓ ✓ ✓
R_{12}	SN-1052	20,000 Ω ✓ ✓ "
R_{13}-R_{16}-R_{19}-R_{22}	SN-1321	125,000 Ω 2 WATT ✓ ✓ BT-2
R_{14}	SN-1111	15000 Ω ✓ ✓ ✓ ✓
R_{15}-R_{18}-R_{21}-R_{24}	SN-1320	25,000 Ω ✓ ✓ ✓ ✓
R_{17}-R_{20}-R_{23}	SN-1363	10,000 Ω ✓ ✓ ✓ ✓
S_1	SN-608	D.P.S.T. TOGGLE SWITCH
P_1	SN-1325	500,000 Ω; POT 19 2DB STEPS
VS_1-VS_2-VS_3	SN-561	STANDARD 8 PRONG SOCKET
VT_1-VT_2-VT_3	SN-792	VACUUM TUBE (6J7-B-31)
TS_1	AM-2098	TERMINAL STRIP

NOTE

1-IF INCREASED GAIN IS REQUIRED, WHEN A LOW IMPEDANCE SOURCE IS CONNECTED TO TERMINAL NS(L), CHANGE R_1 TO A VALUE TO MATCH THE IMPEDANCE OF THE SOURCE, DISCONNECT THE GREEN WIRE CONNECTED TO R_{24} AND CONNECT THE BLK-WH STRAP (SHOWN DOTTED) BETWEEN R_2 AND R_4. INSERT AN SN-792 VT IN SOCKET VS_1

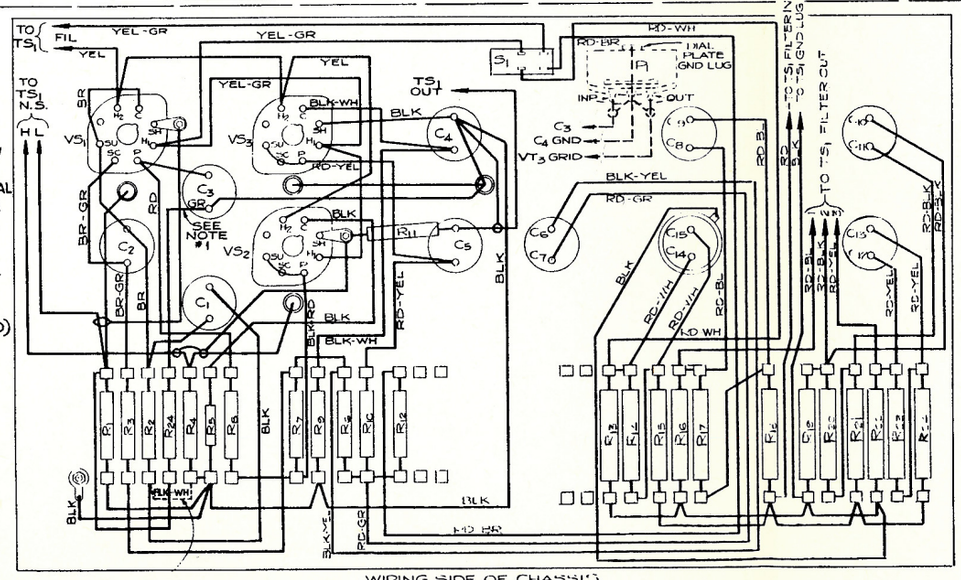

WIRING SIDE OF CHASSIS

SEE NOTE #1

A REDRAWN FROM ISSUE #1 DUE TO CIRCUIT CHANGE
A.S. 1-17-41 G.H.P.
ISSUE:-2 6-19-41 G.H.P.
B WIRING CHANGED AND NOTE #1 ADDED
A.S. 1-17-41
ISSUE:-B 1-14-41

AM 1009 AMPL-FILTER
WIRING DIAGRAM & SCHEMATIC
INTERNATIONAL PROJECTOR CORPORATION
90 GOLD STREET NEW YORK
DR A.S. CHK APP'D
WD-166

SCALE

UNLESS OTHERWISE SPECIFIED TOLERANCES OF ALL FRACT. DIM. TO BE ± 1/64 TOLERANCES OF ALL DECIMAL DIM. TO BE ± .005

IC-2066

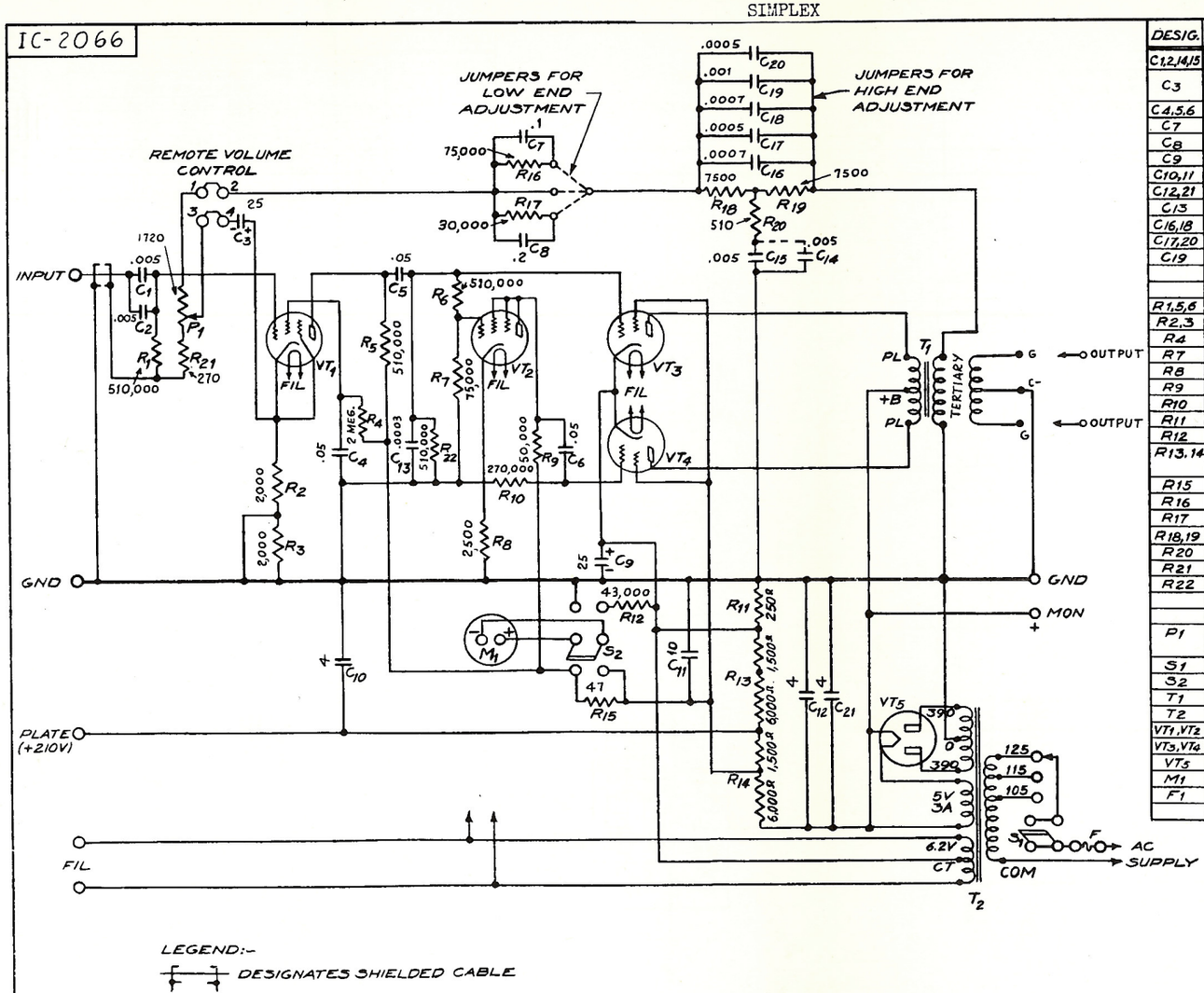

DESIG.	PART No.	APPARATUS
C1,2,14,15	SN-515	.005MF-500V CAPACITOR
C3	" 504	25MF-25V " (WITH PAPER TUBE)
C4,5,6	" 514	.05MF-400V CAPACITOR
C7	" 511	.1MF-200V. "
C8	" 510	.2MF- " "
C9	" 502	25MF-50V "
C10,11	" 507	~~4~~ 20 - ~~20~~ 10 "
C12,21	" 508	4MF-600V "
C13	" 516	.0003MF-500V "
C16,18	" 581	.00075MF- " "
C17,20	" 512	.0005MF " "
C19	" 582	.001 MF " "
R1,5,6	" 539	510,000Ω 1 WATT RESISTOR
R2,3	" 1130	2,000Ω " " (WIRE WOUND)
R4	" 517	2 MEG " "
R7	" 521	75,000Ω " "
R8	" 533	2,500Ω " "
R9	" 520	50,000Ω " "
R10	" 580	270,000Ω " "
R11	" 535	250Ω 10 WATT "
R12	" 971	43,000Ω 1 WATT "
R13,14	" 529	7,500Ω 17 WATT " TAPPED AT 1,500Ω
R15	" 536	47Ω 1 WATT RESISTOR (WIRE WOUND)
R16	" 604	75,000Ω 1/2 WATT "
R17	" 526	30,000Ω " "
R18,19	" 528	7,500Ω " "
R20	" 772	510Ω " "
R21	" 613	270Ω " "
R22	" 539	510,000Ω " "
P1	" 583	1720Ω 2 WATT POT. I.R.C. TYPE CPS WITH TAPER "A"
S1	" 608	D.P.S.T. SWITCH.
S2	" 988	D.P.D.T. "
T1	" 1804	OUTPUT TRANSFORMER
T2	" 576	POWER "
VT1,VT2	" 707	6J7 METAL VACUUM TUBE
VT3,VT4	" 706	6L6G VACUUM TUBE
VT5	" 708	5Z3 VACUUM TUBE
M1	" 556	WESTON D.C. MILLIAMETER MODEL-301
F1	" 549	#702 FUSETRON (2-AMP)

ISSUE: 1 3-29-46

REMOVED NOTES "AMPLIFIERS FROM 1289 UP ARE AS SHOWN, AND SCHEMATIC OF AMPLIFIERS Nos. 151, 152, 162, 207, 210, 221, 227, 230, 238, 347, 418, 431, 432, 433, 434, 436, 491, AND FROM 509 TO 1288 ARE AS SHOWN EXCEPT THAT S_1 AND S_2 ARE SN-566 AND SN-565 RESPECTIVELY."
REMOVED NOTE "REFER TO WD-1022 (AM-1020 AMPLIFIER, WIRING DIAGRAM) FOR WIRING CHANGES IN OTHER AMPLIFIERS WHEN IMPROVED OPERATION IS DESIRED."

1550 E:2 3-21-47

1. RESISTANCE SHOWN IN OHMS UNLESS OTHERWISE SPECIFIED.
2. CAPACITY SHOWN IN MICROFARADS.

UNLESS OTHERWISE SPECIFIED
TOLERANCES OF ALL FRACT. DIM. TO BE ± 1/64
TOLERANCES OF ALL DECIMAL DIM. TO BE ± .005

SCALE

AM-1020 AMPLIFIER
POWER AMPLIFIER
SCHEMATIC
INTERNATIONAL PROJECTOR CORPORATION
90 GOLD STREET NEW YORK
DR. NLF CHK. APP'D. IC-2066

ALTEC SERVICE CORPORATION
SIMPLEX

WD-1022

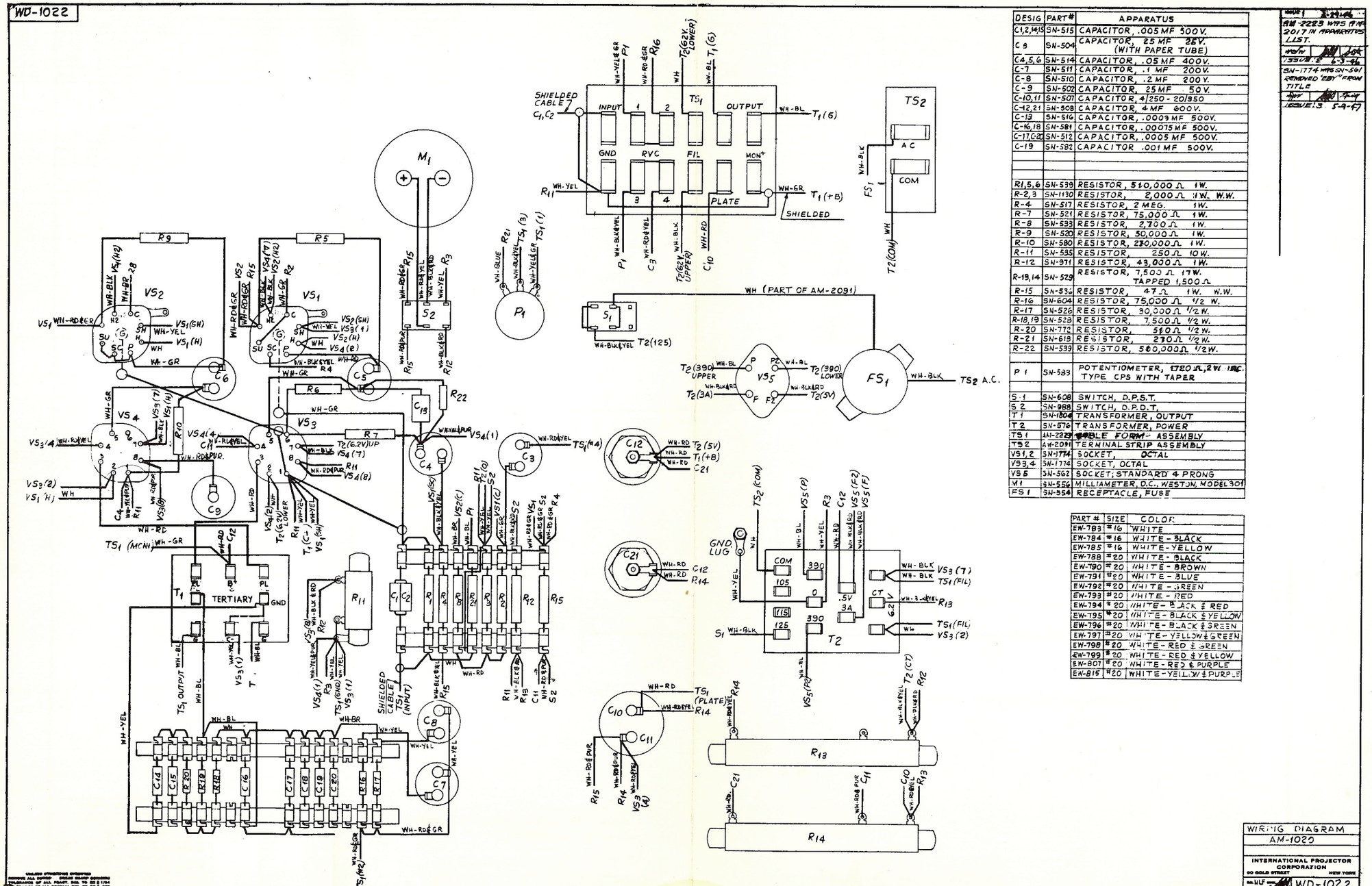

DESIG	PART #	APPARATUS
C1,2,14,15	SN-515	CAPACITOR, .005 MF 500V.
C 3	SN-504	CAPACITOR, 25 MF 25V. (WITH PAPER TUBE)
C4,5,6	SN-514	CAPACITOR, .05 MF 400V.
C-7	SN-511	CAPACITOR, .1 MF 200V.
C-8	SN-510	CAPACITOR, .2 MF 200V.
C-9	SN-502	CAPACITOR, 25 MF 50V.
C-10,11	SN-507	CAPACITOR, 4/250-20/850
C-12,21	SN-508	CAPACITOR, 4 MF 600V.
C-13	SN-516	CAPACITOR, .0003 MF 500V.
C-16,18	SN-581	CAPACITOR, .00075 MF 500V.
C-17,C-20	SN-512	CAPACITOR, .0005 MF 500V.
C-19	SN-582	CAPACITOR .001 MF 500V.
R1,5,6	SN-539	RESISTOR, 510,000 Ω 1W.
R-2,3	SN-1130	RESISTOR, 2,000 Ω 1W. W.W.
R-4	SN-517	RESISTOR, 2 MEG. 1W.
R-7	SN-521	RESISTOR, 75,000 Ω 1W.
R-8	SN-533	RESISTOR, 2,700 Ω 1W.
R-9	SN-520	RESISTOR, 50,000 Ω 1W.
R-10	SN-580	RESISTOR, 210,000 Ω 1W.
R-11	SN-535	RESISTOR, 250 Ω 10W.
R-12	SN-911	RESISTOR, 43,000 Ω 1W.
R-13,14	SN-529	RESISTOR, 7,500 Ω 17W. TAPPED 1,500 Ω
R-15	SN-534	RESISTOR, 47 Ω 1W. W.W.
R-16	SN-604	RESISTOR, 75,000 Ω 1/2 W.
R-17	SN-526	RESISTOR, 30,000 Ω 1/2 W.
R-18,19	SN-528	RESISTOR, 7,500 Ω 1/2 W.
R-20	SN-772	RESISTOR, 510 Ω 1/2 W.
R-21	SN-618	RESISTOR, 270 Ω 1/2 W.
R-22	SN-539	RESISTOR, 510,000 Ω 1/2W.
P 1	SN-583	POTENTIOMETER, 1720 Ω, 2W WIRE TYPE CPS WITH TAPER
S 1	SN-608	SWITCH, D.P.S.T.
S 2	SN-988	SWITCH, D.P.D.T.
T 1	SN-1804	TRANSFORMER, OUTPUT
T 2	SN-576	TRANSFORMER, POWER
TS 1	AM-2239	CABLE FORM - ASSEMBLY
TS 2	AM-2091	TERMINAL STRIP ASSEMBLY
VS 1,2	SN-1774	SOCKET, OCTAL
VS 3,4	SN-1774	SOCKET, OCTAL
VS 5	SN-562	SOCKET; STANDARD 4 PRONG
M 1	SN-556	MILLIAMETER, D.C., WESTON, MODEL 301
FS 1	SN-554	RECEPTACLE, FUSE

PART #	SIZE	COLOR
EW-783	# 16	WHITE
EW-784	# 16	WHITE - BLACK
EW-785	# 16	WHITE - YELLOW
EW-788	# 20	WHITE - BLACK
EW-790	# 20	WHITE - BROWN
EW-791	# 20	WHITE - BLUE
EW-792	# 20	WHITE - GREEN
EW-793	# 20	WHITE - RED
EW-794	# 20	WHITE - BLACK & RED
EW-795	# 20	WHITE - BLACK & YELLOW
EW-796	# 20	WHITE - BLACK & GREEN
EW-797	# 20	WHITE - YELLOW & GREEN
EW-798	# 20	WHITE - RED & GREEN
EW-799	# 20	WHITE - RED & YELLOW
EW-801	# 20	WHITE - RED & PURPLE
EW-815	# 20	WHITE - YELLOW & PURPLE

ISSUE 1 1-14-47
EW-2239 WAS # W 2017 IN APPARATUS LIST.
ISSUE 2 6-3-47
SN-1774 WAS SN-561 REMOVED "EBY" FROM TITLE
ISSUE 3 5-9-47

WIRING DIAGRAM
AM-1020

INTERNATIONAL PROJECTOR CORPORATION
90 GOLD STREET NEW YORK

DR. WLF CHK. APPD. WD-1022

Printed in U.S.A.

1. DESCRIPTION - The AM-1025 is a rack mounted, AC operated, single push-pull stage, power amplifier of recessed panel construction. It is used particularly in Drive-In Theatre Systems.

2. CHARACTERISTICS

Gain	9 DB when substituted for nominal 12 ohm load on AM-1001 Amplifier
Impedance	Input (source) 10 and 20 ohms Input (internal) 46 and 70 ohms Output (load) 10 and 20 ohms Output (internal) 20 and 48 ohms
Power Output	60 Watts, 40 DB; 47.8 DBM
Frequency Response	±1 DB 30-15,000 cps
Noise Level	-27 DB: -19.2 DBM
Vacuum Tubes	2 - 807, 2 - OD3/VR150, 1 - 5R4GY
Power Supply Required	105-125 Volts AC, 50-60 cycle, 150 Watts
Dimensions	8-3/4" H x 19" W
Weight	47 lbs.

3. INSTALLATION INSTRUCTIONS

3.1 General - Remove knock-outs in the ends of the chassis to facilitate cooling.

3.2 Power transformer connections

Average Line Voltage	T-3 Transformer Tap
Over 115	125 V
110 - 115	115 V
100 - 110	105 V

3.3 Output Transformer Connections

Load	T-2 Transformer Tap
14-24 ohms	20 ohms
6-14 ohms	10 ohms

NOTE: Impedance of Simplex Coupling Units and In-A-Car Speakers (2 speakers, volume controls full on) is approximately 1500 ohms at 1000 cps.

4. MODIFICATIONS - R-7 Resistor in amplifiers of early manufacture is a 20 ohm 2 watt resistor. It is recommended that this be changed to 75 ohms 10 watts. When this change is made the bias voltage should be readjusted by moving slider on R-5 Resistor to the top.

Associate Drawing
4179 Schematic

Issued by
Engineering Department
Printed in U. S. A.

July 15, 1949
Issue #1

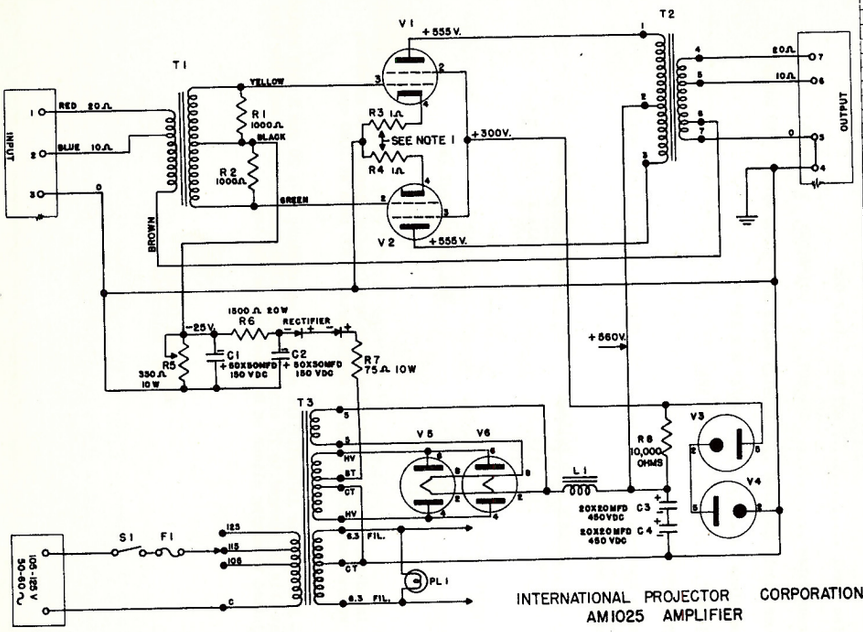

INTERNATIONAL PROJECTOR CORPORATION
AM1025 AMPLIFIER

10661-2A

NOTES:
1- FOR CHECKING TUBES FOR EMISSION OR BALANCE CONNECT AS-1800 METER (0.1 MA RANGE) ACROSS R-3 OR R-4. MULTIPLY METER READING BY 1250 TO OBTAIN ACTUAL CATHODE CURRENT IN MILLIAMPS. (NORMAL METER READING .032-.04 MA; CATHODE CURRENT 40-50MA)

PARTS LIST	
C1,2	50-50MFD. 150 V MALLORY FP214
C3,4	20-20MFD. 450V " FP234
R1,2	1,000 OHM 2W IRC BT2
R3,R4	1 OHM 1W MATCHED TO ±2% IRC BW1 ±5 %
R5	350 OHM 10W OHMITE DIVIDOHM 1017
R6	1500 OHM 20W " BROWN DEVIL
R7	75 OHM. 10W
R8	10,000 OHM 10W OHMITE BROWN DEVIL
T1	ALTEC LANSING 4541
T2	" " 18130
T3	ALTEC LANSING TM609
V1,2	807 RCA OR SYLVANIA
V3,4	0D3/VR150 " "
V5,6	5R4GY " "
L1	ALTEC LANSING TL-521
S1	H&H 1561 S.P.S.T.
F1	3 AMP. LITTEL FUSE 3AG
RECTIFIER 2	100MA. RADIO RECEPTOR 5MI
PL 1	G.E. MAZDA NO. 44

OPERATING DATA	
# GAIN	11DB
## POWER OUTPUT AT 2.25% TOTAL HARMONICS AT 400 C.P.S.	60 WATTS
FREQUENCY RESPONSE	±1DB 30-15,000~
NOISE LEVEL	-87DB

REFERENCE - 0 DB = .006 WATTS

FROM 20 Ω INPUT AND WHEN REPLACING A NOMINAL 20 Ω LOAD TERMINATING A SOURCE WHOSE EFFECTIVE INTERNAL IMPEDANCE IS 10 OHMS

13 VOLTS ACROSS TERMS. 1 & 3 REQUIRED FOR MAXIMUM POWER OUTPUT

INDICATED VOLTAGES ARE WITH ZERO SIGNAL

ISSUE	APP'D	DATE	CHANGE
1		2-8-48	
2		5-2-49	REVISED NOTES
2A		6-30-49	R-7 WAS SCREW, ONE RECTIFIER & NOTE 1 REVISED

DR. BY C.P.W. APP'D

ALTEC LANSING CORPORATION
HOLLYWOOD, CALIF.

AM1025 AMPLIFIER SCHEMATIC

4179

ALTEC SERVICE CORPORATION
SUPPLY CO.

AMPLIFIER AM-1025 4003

PRINTED IN U.S.A.

0. ABSTRACT

0.1 To provide information on the subject of blowing fuses in the AM-1026 Amplifier.

1. GENERAL

1.1 Tests by International Projector Corporation based on reports of the AM-1026 Amplifier blowing fuses indicated that the 807 Tubes became cherry-red and the fuse blew in approximately one hour's operation when the output of the amplifier was shorted, and the audio signal adjusted so that signal peaks were approximately 60 watts.

2. CONCLUSION

2.1 As a result of these tests International Projector Corporation suggests that in case similar symptoms are encountered in the field, a check should be made to see that the load presented to the amplifier is normal.

2.11 The most likely source of trouble will be shorted ramp feed lines.

WD-1085

ISSUE 1 11-17-49
REVERSED PIN NOS 2 & 8 OF V8 & V9
CHANGED TITLE & REF. DWG AME-1026 FROM 30W. REPLACED WD-1085 SCHEMATIC. REF. DWG. WITH WIRING DIA.
E.D.
ISSUE 2 5-17-50

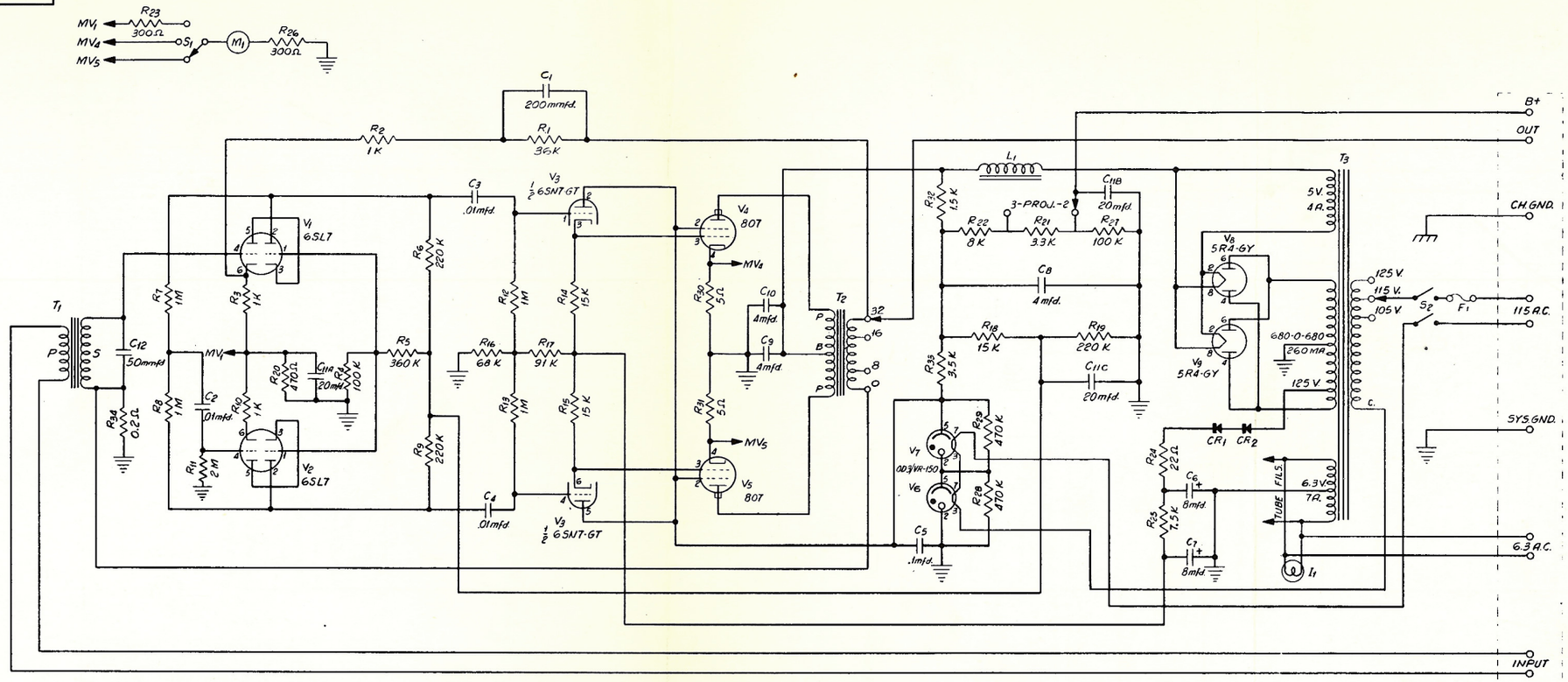

SYMBOL	I.P.C. PT. Nº	DESCRIPTION
R_1	PA-1010	RESISTOR, 36K, 1W., CARBON
R_2	-2051	" , 1K, 1W., "
R_3	-2051	" , 1K, 1W., "
R_4	-2045	" ,100K, 1W., "
R_5	-2073	" ,360K, 1W., "
R_6	-2072	" ,220K, 1W., "
R_7	-2048	" , 1M, 1W., "
R_8	-2048	" , 1M, 1W., "
R_9	-2072	" ,220K, 1W., "
R_{10}	-2051	" , 1K, 1W., "
R_{11}	-2074	" , 2M, 1W., "
R_{12}	-2048	" , 1M, 1W., "
R_{13}	-2048	" , 1M, 1W., "
R_{14}	-2069	" ,15K, 1W., "
R_{15}	-2069	" ,15K, 1W., "
R_{16}	-2070	" ,68K, 1W., "
R_{17}	-2071	" ,91K, 1W., "
R_{18}	-2069	" ,15K, 1W., "
R_{19}	-2072	" ,220K, 1W., "
R_{20}	-2075	" ,470Ω, 1W., "
R_{21}	-2523	" ,3.3K, 2W., "
R_{22}	-2077	" , 8K, 5W., WIREWOUND
R_{23}	-2802	" ,300Ω, 1W., CARBON
R_{24}	-2451	" , 22Ω, 1W., "

SYMBOL	I.P.C. PT. Nº	DESCRIPTION
R_{25}	PA-2067	RESISTOR, 7.5K, 2W., CARBON
R_{26}	-2802	" ,300Ω, 1W., "
R_{27}	-2076	" ,100K, 2W., "
R_{28}	-2046	" ,470K, 1W., "
R_{29}	-2046	" ,470K, 1W., "
R_{30}	-2038	" , 5Ω, 1W., "
R_{31}	-2038	" , 5Ω, 1W., "
R_{32}	-2101	" , 1.5K, 25W., WIREWOUND
R_{33}	-2100	" , 3.5K, 25W., "
R_{34}	-2066	" ,0.2Ω, 2W., "
C_1	-2803	CAPACITOR, 200mmfd, 500V., MOLDED MICA
C_2	-2058	" , .01 mfd., 600V., TUBULAR, PAP
C_3	-2058	" , .01 mfd., 600V., " "
C_4	-2058	" , .01 mfd., 600V., " "
C_5	-2099	" , .1 mfd., 400V., " "
C_6	-2061	" , 8 mfd., 250V., TUBULAR, ELEC.
C_7	-2061	" , 8 mfd., 250V., " "
C_8	-2098	" , 4 mfd., 600V., PAPER, CAN
C_9	-2098	" , 4 mfd., 600V., " "
C_{10}	-2098	" , 4 mfd., 600V., " "
C_{11A}	-2085	CAPACITOR ELECTROLYTIC, 20 mfd., 25 V.
C_{11B}		20 mfd., 450 V.
C_{11C}		20 mfd., 450 V.
C_{12}	-2623	CAPACITOR, 50 mmfd., 500 V., MOLDED MICA

LEGEND: K = x 1000 Ω
M = x 1,000,000 Ω

SYMBOL	I.P.C. PT. Nº	DESCRIPTION
T_1	PB-2082	INPUT TRANSFORMER
T_2	PC-2095	OUTPUT "
T_3	PC-2094	POWER "
L_1	PB-2096	CHOKE
F_1	PA-2455	FUSETRON, 2.5 A.
I_1	PA-2425	DIAL LAMP, 6-8 V.
S_1	-2092	ROTARY SWITCH, 1 POLE, 3 POS.
S_2	-2089	TOGGLE SWITCH, D.P.S.T.
CR_1	-2091	SELENIUM RECTIFIER
CR_2	-2091	" "
M_1	-2088	D.C. MILLIAMMETER
V_1	-1055	VACUUM TUBE, 6SL7-GT
V_2	-1055	" " ,6SL7-GT
V_3	-2607	" " ,6SN7-GT
V_4	-2608	" " ,807
V_5	-2608	" " ,807
V_6	-1053	REGULATOR TUBE, OD3/VR-150
V_7	-1053	" " ,OD3/VR-150
V_8	-2137	VACUUM TUBE, 5R4-GY
V_9	-2137	" " ,5R4-GY

REFERENCE DWGS.
AME-1026 X-L AMPLIFIER, 60 W.
WE-1094 WIRING DIAGRAM

SCALE

SCHEMATIC
60 W. AMPLIFIER

INTERNATIONAL PROJECTOR CORPORATION
99 LA FRANCE AVENUE
BLOOMFIELD NEW JERSEY

DR. E.D. CH'K. APP'D.

PRODUCT CLASS

WD-1085

UNLESS OTHERWISE SPECIFIED
REMOVE ALL BURRS BREAK SHARP CORNERS
TOLERANCES OF ALL FRACT. DIM. TO BE ± 1/64
TOLERANCES OF ALL DECIMAL DIM. TO BE ± .005

Issued by Engineering Department
Printed in U. S. A.

ALTEC SERVICE CORPORATION

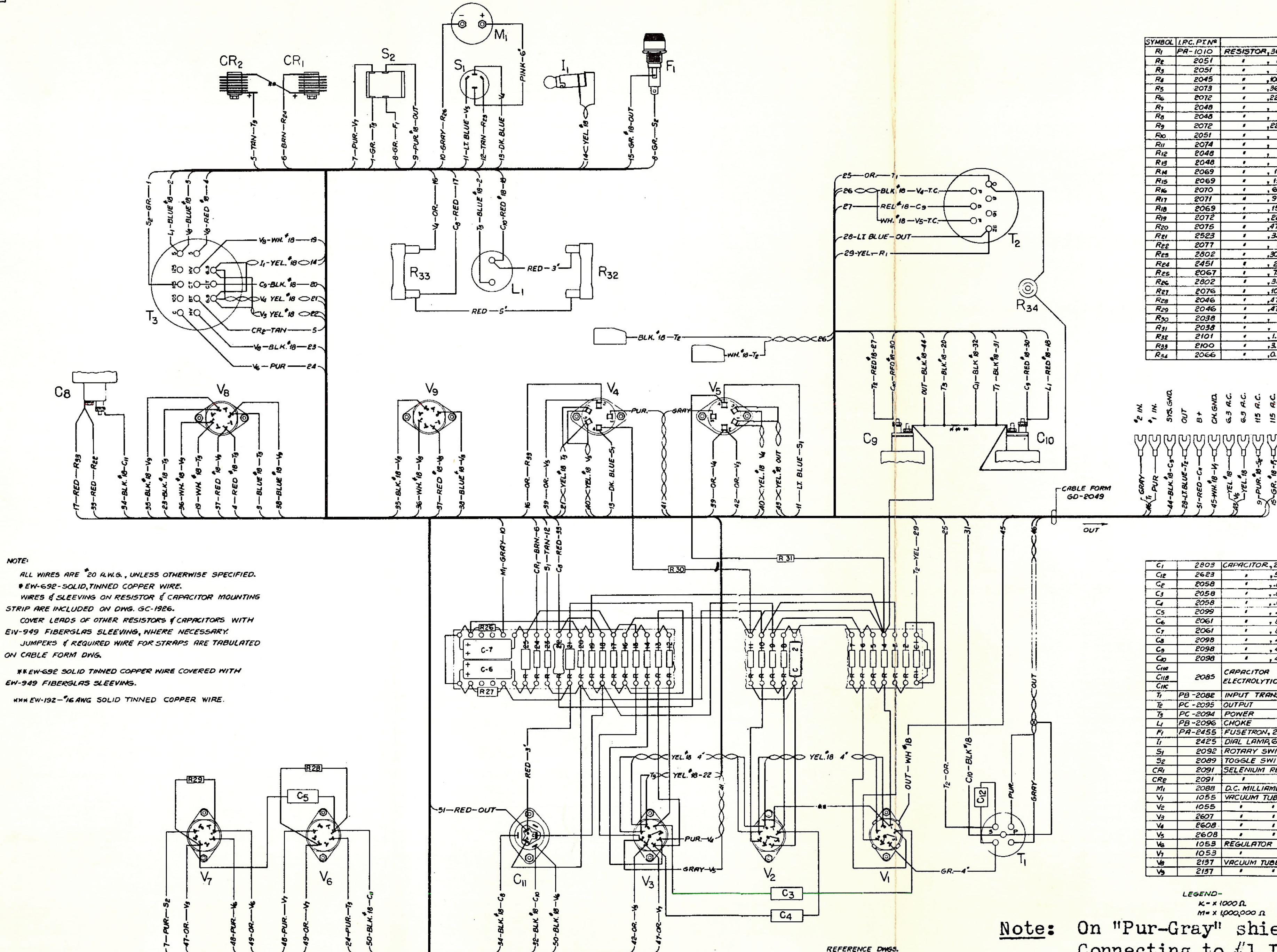

NOTE:

ALL WIRES ARE #20 A.W.G., UNLESS OTHERWISE SPECIFIED.

\# EW-692-SOLID, TINNED COPPER WIRE.

WIRES & SLEEVING ON RESISTOR & CAPACITOR MOUNTING STRIP ARE INCLUDED ON DWG. GC-1926.

COVER LEADS OF OTHER RESISTORS & CAPACITORS WITH EW-949 FIBERGLAS SLEEVING, WHERE NECESSARY.

JUMPERS & REQUIRED WIRE FOR STRAPS ARE TABULATED ON CABLE FORM DWG.

** EW-692 SOLID TINNED COPPER WIRE COVERED WITH EW-949 FIBERGLAS SLEEVING.

*** EW-192-#16 AWG SOLID TINNED COPPER WIRE.

REFERENCE DWGS.
AME-1026 - 60 W. AMPLIFIER ASSY
WD-1085 - SCHEMATIC

SYMBOL	I.P.C. PT. Nº	DESCRIPTION
R_1	PA-1010	RESISTOR, 36K., 1W. CARBON
R_2	2051	" , 1K , 1W., "
R_3	2051	" , 1K , 1W., "
R_4	2045	" , 100K , 1W., "
R_5	2073	" , 360K , 1W., "
R_6	2072	" , 220K , 1W., "
R_7	2048	" , 1M. , 1W., "
R_8	2048	" , 1M. , 1W., "
R_9	2072	" , 220K. , 1W., "
R_{10}	2051	" , 1K , 1W., "
R_{11}	2074	" , 2M , 1W., "
R_{12}	2048	" , 1M , 1W., "
R_{13}	2048	" , 1M , 1W., "
R_{14}	2069	" , 15K , 1W., "
R_{15}	2069	" , 15K , 1W., "
R_{16}	2070	" , 68K , 1W., "
R_{17}	2071	" , 91K , 1W., "
R_{18}	2069	" , 15K , 1W., "
R_{19}	2072	" , 220K , 1W., "
R_{20}	2075	" , 470Ω , 1W., "
R_{21}	2523	" , 3.3K , 2W., "
R_{22}	2077	" , 8K , 5W., WIREWOUND
R_{23}	2802	" , 300Ω , 1W., CARBON
R_{24}	2451	" , 22Ω , 1W., "
R_{25}	2067	" , 7.5K , 2W., "
R_{26}	2802	" , 300Ω , 1W., "
R_{27}	2076	" , 100K , 2W., "
R_{28}	2046	" , 470K , 1W., "
R_{29}	2046	" , 470K , 1W., "
R_{30}	2038	" , 5Ω , 1W., "
R_{31}	2038	" , 5Ω , 1W., "
R_{32}	2101	" , 1.5K , 25W., WIREWOUND
R_{33}	2100	" , 3.5K , 25W., "
R_{34}	2066	" , 0.2Ω , 2W., "

C_1	2803	CAPACITOR, 200mmfd., 500V., MOLDED MICA	
C_{12}	2623	" , 50mmfd., 500V., MOLDED MICA	
C_2	2058	" , .01 mfd., 600V., TUBULAR, PAPER	
C_3	2058	" , .01 mfd., 600V., " , "	
C_4	2058	" , .01 mfd., 600V., " , "	
C_5	2099	" , .1 mfd., 400V., " , "	
C_6	2061	" , 8 mfd., 250V., " , ELECT.	
C_7	2061	" , 8 mfd., 250V., " , "	
C_8	2098	" , 4 mfd., 600V., PAPER, CAN	
C_9	2098	" , 4 mfd., 600V., " , "	
C_{10}	2098	" , 4 mfd., 600V., " , "	
C_{11A}	2085	CAPACITOR ELECTROLYTIC	20 mfd., 25V.
C_{11B}			20 mfd., 450V.
C_{11C}			20 mfd., 450V.
T_1	PB-2082	INPUT TRANSFORMER	
T_2	PC-2095	OUTPUT "	
T_3	PC-2094	POWER "	
L_1	PB-2096	CHOKE	
F_1	PA-2455	FUSETRON, 2.5 AMP.	
I_1	2425	DIAL LAMP, 6-8 V.	
S_1	2092	ROTARY SWITCH, 1 POLE, 3 POS.	
S_2	2089	TOGGLE SWITCH, D.P.S.T.	
CR_1	2091	SELENIUM RECTIFIER	
CR_2	2091	" "	
M_1	2088	D.C. MILLIAMETER	
V_1	1055	VACUUM TUBE, 6SL7-GT	
V_2	1055	" " , 6SL7-GT	
V_3	2607	" " , 6SN7-GT	
V_4	2608	" " , 807	
V_5	2608	" " , 807	
V_6	1053	REGULATOR TUBE, OD3/VR-150	
V_7	1053	" " , OD3/VR-150	
V_8	2137	VACUUM TUBE, 5R4-GY	
V_9	2137	" " , 5R4-GY	

LEGEND-
K = x 1000 Ω
M = x 1,000,000 Ω

Note: On "Pur-Gray" shielded leads of cable Connecting to #1 IN and #2 IN:
Change "Pur" to "BLK or Pur"
Change "Gray" to "RD or Gray"

ISSUE-1 [illegible]
CHANGES MADE AS PER PRINT ATTACHED TO CHANGE NO. [illegible]
C.E. [illegible]
ISSUE-2- [illegible]
JUMPER FROM C-11 TO R-18 WAS TO R-19
R.D. [illegible]
ISSUE 3 - [illegible]

WIRING DIAGRAM
60 W. AMPLIFIER

INTERNATIONAL PROJECTOR CORPORATION
[illegible]
BLOOMFIELD NEW JERSEY
DR. R.D. CH. [illegible] APP. [illegible]

F | WE-1094

SUBJECT - OVERHEATING OF 807 VACUUM TUBES

High plate current (at zero signal) and consequent overheating of 807 Vacuum Tubes in the AM-1026 Amplifier have been found due to one or more of the following conditions:

1. Short circuits in output lines - This has occurred in Drive-In theatres.

2. Defective voltage regulator tubes - The 807 screen supply should be close to 300 V.

3. Heater cathode leakage in 6SN7 Vacuum Tubes - The manufacturer recommends type 6SN7GTA only.

4. Leakage of C3 and C4 - Universal replacement was made some time ago with the CD-Gray Tiger type. If these give trouble, headquarters should be notified by special memorandum. Leakage is most easily detected by connecting the DC VTVM across R12 and R13 in turn. There should be no observable deflection of the meter needle.

5. The bias voltage may be below the normal value of -30 volts measured between the 807 grids and ground. This may be due to:

   (a) Incorrect power transformer tap - Use taps as follows:

   Line voltage 122 to 130, use 125 V tap
   Line voltage 113 to 121, use 115 V tap
   Line voltage below 112, use 105 V tap

   (b) Inefficient CR1 and CR2 bias rectifiers - Restore bias voltage to -30 V ± 10% by changing R17 (91,000 ohms) to 75,000 ohms, 1 watt. If there is reason to believe the rectifiers are defective, replacements should be ordered.

Issued by
Engineering Department
Printed in U.S.A.
February 28, 1955
Issue #1

WD-1086

ISSUE 1 10-17-49
ADDED SHIELD BRAID CONNECTION TO T1, 422-A & P-510.
CHANGED INPUT TERMINALS FROM "INPUT" TO "MIN" & "PIN".
ISSUE 2 1-4-50

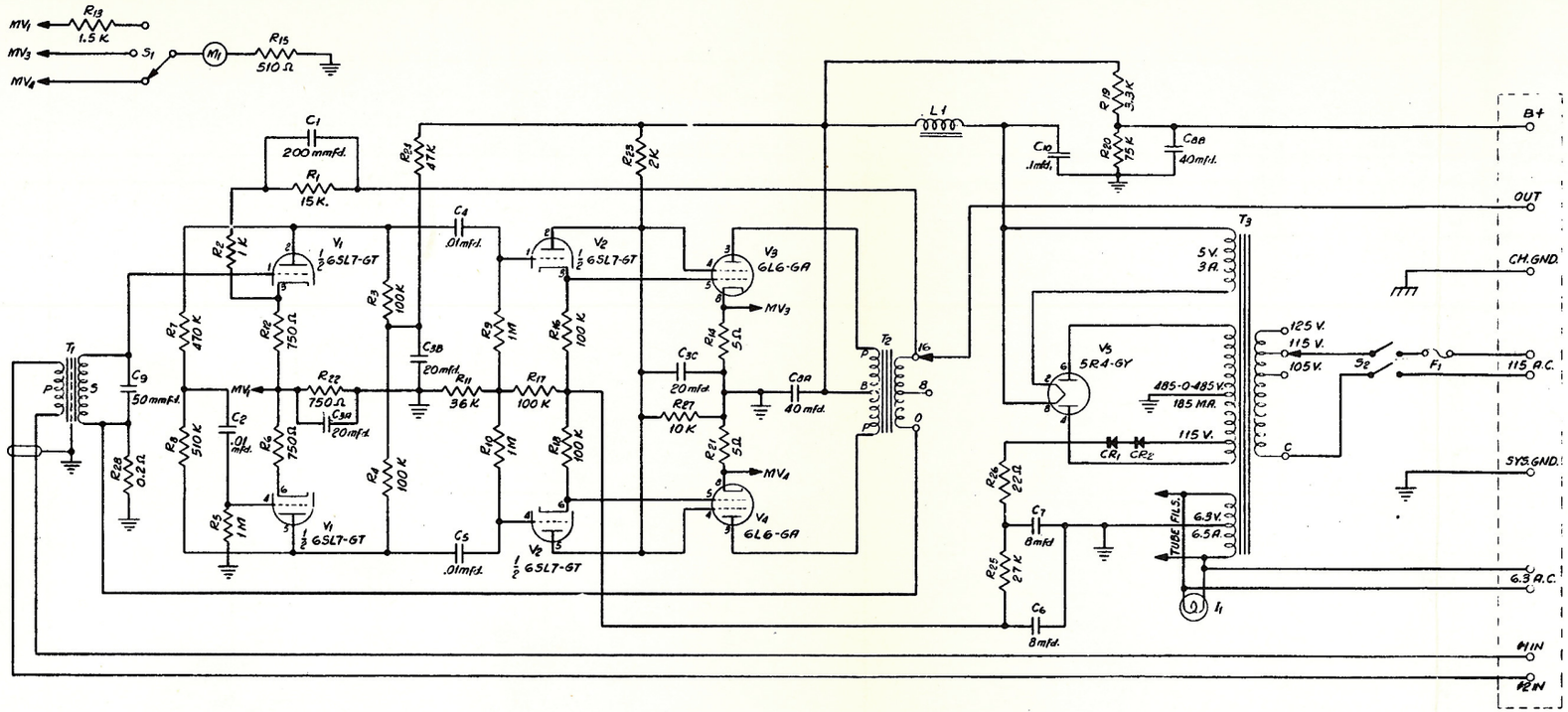

SYMBOL	I.P.C.PT. Nº	DESCRIPTION
R1	PA-2069	RESISTOR, 15 K, 1W., CARBON
R2	-2051	" , 1 K, 1W., "
R3	-2045	" ,100 K, 1W., "
R4	-2045	" ,100 K, 1W., "
R5	-2048	" , 1 M, 1W., "
R6	-1004	" ,750Ω, 1W., "
R7	-2046	" ,470 K, 1W., "
R8	-2047	" ,510 K, 1W., "
R9	-2048	" , 1M, 1W., "
R10	-2048	" , 1M, 1W., "
R11	-1010	" , 36 K, 1W., "
R12	-1004	" ,750Ω, 1W., "
R13	-2125	" , 1.5 K, 1W., "
R14	-2038	" , 5Ω, 1W., "
R15	-2040	" ,510Ω, 1W., "
R16	-2045	" ,100 K, 1W., "
R17	-2045	" ,100 K, 1W., "
R18	-2045	" ,100 K, 1W., "
R19	-2523	" , 3.3 K, 2W., "
R20	-2050	" , 75 K, 2W., "

SYMBOL	I.P.C.PT. Nº	DESCRIPTION
R21	PA-2038	RESISTOR, 5Ω, 1W., CARBON
R22	-1004	" ,750Ω, 1W., "
R23	-2039	" , 2 K, 5W., WIREWOUND
R24	-2043	" , 47 K, 1W., CARBON
R25	-2044	" , 27 K, 1W., "
R26	-2451	" , 22Ω, 1W., "
R27	-2086	" , 10 K, 25W., WIREWOUND
R28	-2066	" ,0.2Ω, 2W., "
C1	-2803	CAPACITOR, 200 mmfd., 500V., MOLDED MICA
C2	-2058	" , .01mfd., 600V., TUB., PAPER
C3A	-2085	CAPACITOR ELECTROLYTIC, 20 mfd., 25 V.
C3B		20 mfd., 450 V.
C3C		20 mfd., 450 V.
C4	-2058	CAPACITOR, .01mfd., 600V., TUB., PAPER
C5	-2058	" , .01mfd., 600V., " , "
C6	-2061	" , 8 mfd., 250V., TUB., ELEC.
C7	-2061	" , 8 mfd., 250V., " "
C8A	-2084	" 40 mfd., 450V.,
C8B		40 mfd., 450V.,
C9	-2623	" ,50 mmfd., 500V., MOLDED MICA
C10	2680	" , .1 mfd., 600 V. TUB., PAPER

SYMBOL	I.P.C.PT. Nº	DESCRIPTION
T1	PB-2082	INPUT TRANSFORMER
T2	-2081	OUTPUT "
T3	PC-2080	POWER "
L1	PB-2083	CHOKE
F1	PA-2499	FUSETRON, 2A.
I1	-2425	DIAL LAMP, 6-8 V.
CR1	-2091	SELENIUM RECTIFIER
CR2	-2091	" "
M1	-2088	D.C. MILLIAMMETER
S1	-2092	ROTARY SWITCH, 1 POLE, 3 POS.
S2	-2089	TOGGLE SWITCH, D.P.S.T.
V1	-1055	VACUUM TUBE, 6SL7-GT
V2	-1055	" " ,6SL7-GT
V3	-2129	" " ,6L6-G
V4	-2129	" " ,6L6-G
V5	-2137	" " ,5R4-GY

LEGEND: K = x 1000 Ω
M = x 1,000,000 Ω

REFERENCE DWGS.
AME-1027-20 W. AMPLIFIER ASS'Y
WE-1092-WIRING DIAGRAM

UNLESS OTHERWISE SPECIFIED
REMOVE ALL BURRS. BREAK SHARP CORNERS
TOLERANCES OF ALL FRACT. DIM. TO BE ± 1/64
TOLERANCES OF ALL DECIMAL DIM. TO BE ± .005

SCALE

SCHEMATIC
20 W. AMPLIFIER

INTERNATIONAL PROJECTOR CORPORATION
85 LA FRANCE AVENUE
BLOOMFIELD NEW JERSEY

DR. AD CH'K. APP'D.

PRODUCT CLASS

WD-1086

Issued by
Engineering Department
Printed in U. S. A.

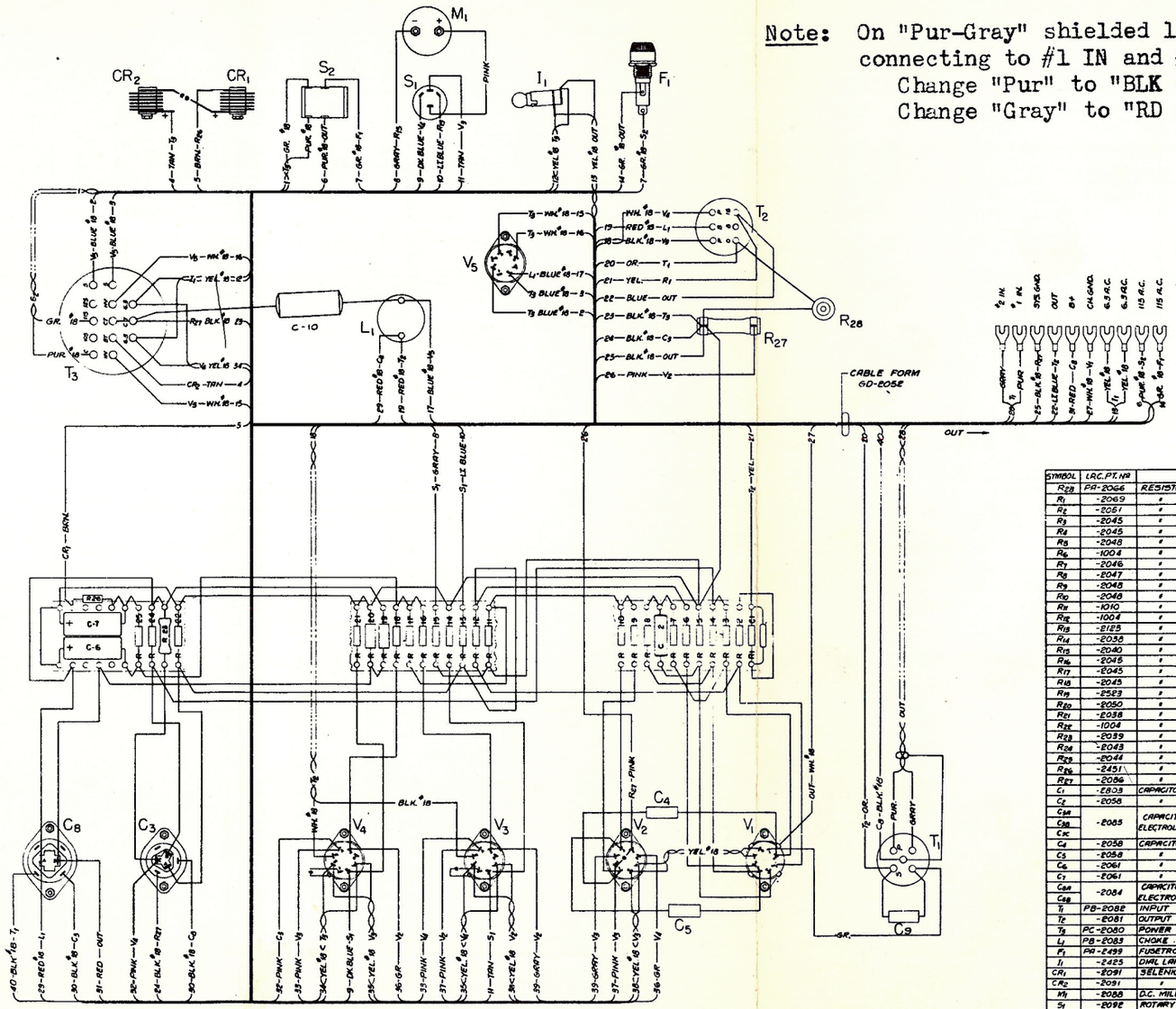

Note: On "Pur-Gray" shielded leads of cable connecting to #1 IN and #2 IN:
Change "Pur" to "BLK or Pur"
Change "Gray" to "RD or Gray"

SYMBOL	LRC PT. NO	DESCRIPTION
R_{28}	PA-2066	RESISTOR, 0.2 Ω, 2W, WIREWOUND
R_1	-2069	" , 15 K, 1W, CARBON
R_2	-2051	" , 1 K, 1W, "
R_3	-2045	" , 100 K, 1W, "
R_4	-2045	" , 100 K, 1W, "
R_5	-2048	" , 1M, 1W, "
R_6	-1004	" , 750 Ω, 1W, "
R_7	-2046	" , 470 K, 1W, "
R_8	-2047	" , 510 K, 1W, "
R_9	-2048	" , 1M, 1W, "
R_{10}	-2048	" , 1M, 1W, "
R_{11}	-1010	" , 36 K, 1W, "
R_{12}	-1004	" , 750 Ω, 1W, "
R_{13}	-2185	" , 1.5 K, 1W, "
R_{14}	-2038	" , 5 Ω, 1W, "
R_{15}	-2040	" , 510 Ω, 1W, "
R_{16}	-2045	" , 100 K, 1W, "
R_{17}	-2045	" , 100 K, 1W, "
R_{18}	-2045	" , 100 K, 1W, "
R_{19}	-2523	" , 8.8 K, 2W, "
R_{20}	-2050	" , 75 K, 2W, "
R_{21}	-2038	" , 5 Ω, 1W, "
R_{22}	-1004	" , 750 Ω, 1W, "
R_{23}	-2039	" , 2 K, 5W, WIREWOUND
R_{24}	-2043	" , 47 K, 1W, CARBON
R_{25}	-2044	" , 27 K, 1W, "
R_{26}	-2451	" , 22 Ω, 1W, "
R_{27}	-2046	" , 10 K, 25W, WIREWOUND
C_1	-2803	CAPACITOR, 200 mmfd., 500 V, MOLDED MICA
C_2	-2058	" , .01 mfd., 600 V, TUBULAR, PAPER
C_{3A}	-2085	CAPACITOR ELECTROLYTIC 20 mfd. 25 V.
C_{3B}		20 mfd. 450 V.
C_{3C}		20 mfd. 450 V.
C_4	-2058	CAPACITOR, .01 mfd., 600 V, TUBULAR, PAPER
C_5	-2058	" , .01 mfd., 600 V, " , "
C_6	-2061	" , .8 mfd., 250 V, " , ELEC.
C_7	-2061	" , .8 mfd., 250 V, " , "
C_{8A}	-2084	CAPACITOR ELECTROLYTIC 40 mfd., 450 V.
C_{8B}		40 mfd., 450 V.
T_1	PB-2082	INPUT TRANSFORMER
T_2	-2081	OUTPUT "
T_3	PC-2080	POWER "
L_1	PB-2083	CHOKE
F_1	PA-2499	FUSETRON, 2 AMP.
I_1	-2425	DIAL LAMP, 6-8 V.
CR_1	-2091	SELENIUM RECTIFIER
CR_2	-2091	" "
M_1	-2058	D.C. MILLIAMMETER
S_1	-2092	ROTARY SWITCH, 1 POLE, 3 POS.
S_2	-2089	TOGGLE SWITCH, D.P.S.T.
V_1	-1055	VACUUM TUBE, 6SL7-GT
V_2	-1056	" " , 6SL7-GT
V_3	-2129	" " , 6L6-G
V_4	-2129	" " , 6L6-G
V_5	-2137	" " , 5R4-GY
C_8	-2823	CAPACITOR, 50 mmfd., 500 V, MOLDED MICA
C_{10}	-2800	" , .1 mfd., 600 V, TUBULAR, PAPER

ALL WIRES ARE #20 A.W.G., UNLESS OTHERWISE SPECIFIED.
*EW-692 - SOLID TINNED COPPER WIRE
JUMPER & STRAP LENGTHS INCLUDED ON CABLE FORM DWG.
WIRES ON RESISTOR & CAPACITOR STRIP ARE INCLUDED ON DWG. GC-1925
COVER LEADS OF RESISTORS & CAPACITORS WITH EW-949 FIBERGLAS SLEEVING WHERE NECESSARY.
**EW-692 WIRE COVERED WITH EW-949 SLEEVING.

LEGEND:
K = x 1000 Ω
M = x 1,000,000 Ω

REFERENCE DWGS.
AME 1027-20 W. AMPLIFIER ASS'Y
VID-1086-SCHEMATIC

WIRING DIAGRAM
20 W. AMPLIFIER
INTERNATIONAL PROJECTOR CORPORATION
F WE-1092

WC-1089

ISSUE / 1-11-50

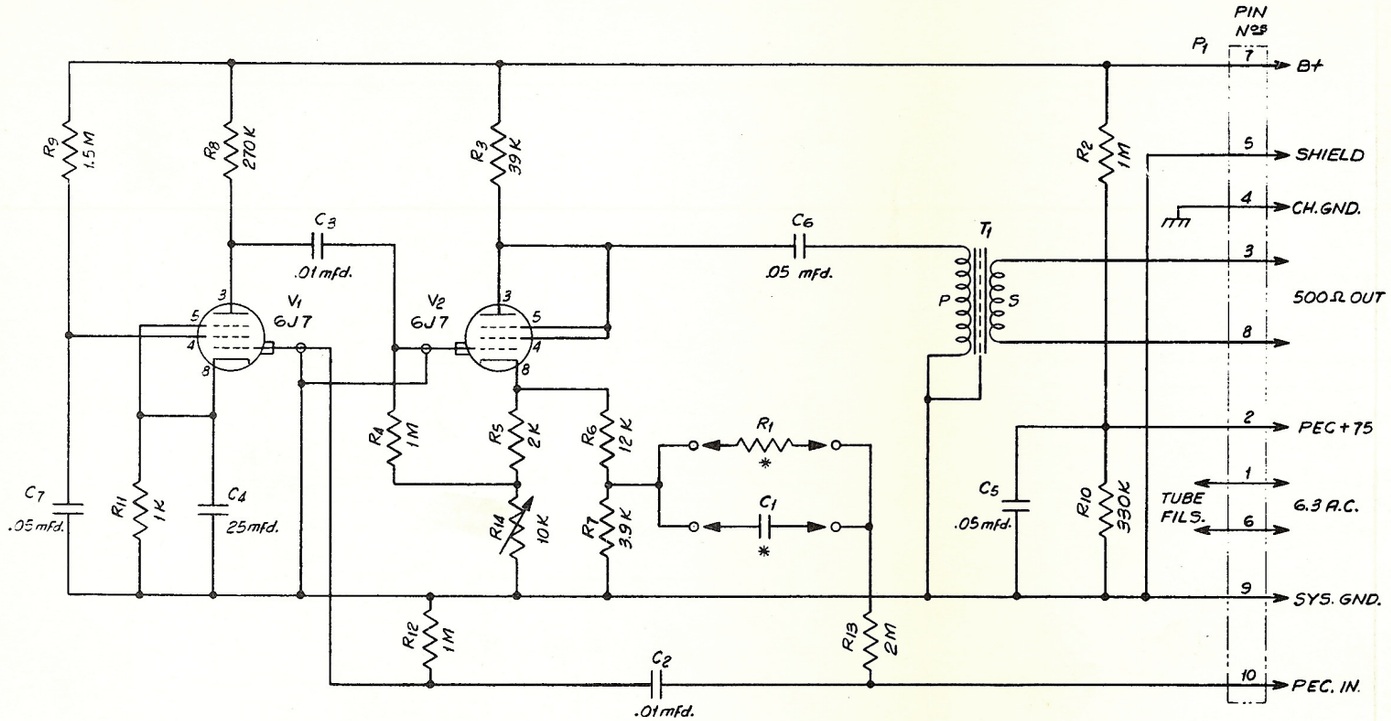

SYMBOL	I.P.C. PT. Nº	DESCRIPTION
* R1	PA-2047	RESISTOR, 510 K, 1 W, CARBON
R1	-2074	" , 2 M, 1 W, "
R1	-2639	" , 3.9 M, 1 W, "
R2	-2048	" , 1 M, 1 W, "
R3	-2054	" , 39 K, 1 W, "
R4	-2048	" , 1 M, 1 W, "
R5	-2052	" , 2 K, 1 W, "
R6	-2053	" , 12 K, 1 W, "
R7	-1007	" , 3.9 K, 1 W, "
R8	-2055	" , 270 K, 1 W, "
R9	-2057	" , 1.5 M, 1 W, "
R10	-2521	" , 330 K, 1 W, "
R11	-2051	" , 1 K, 1 W, "
R12	-2048	" , 1 M, 1 W, "
R13	-2074	" , 2 M, 1 W, "
R14	-2062	" , 10 K, 2 W, POTENTIOMETER

SYMBOL	I.P.C. PT. Nº	DESCRIPTION
* C1	PA-2637	CAPACITOR, .003 mfd., 600 V., TUB, PAPER
C1	-2120	" , .001 mfd., 600 V., " "
C1	-2638	" , .0005 mfd., 600 V., " "
C2	-2058	" , .01 mfd., 600 V., " "
C3	-2058	" , .01 mfd., 600 V., " "
C4	-2617	" , 25 mfd., 25 V., CAN, ELECT.
C5	-2117	" , .05 mfd., 400 V., CAN, PAPER
C6	-2117	" , .05 mfd., 400 V., " "
C7	-2117	" , .05 mfd., 400 V., " "
T1	-2121	OUTPUT TRANSFORMER, 500 Ω
P1	-2063	MALE PANEL CONNECTOR, 10 PRONG
V1	-2118	VACUUM TUBE, 6J7
V2	-2118	" " , 6J7

NOTE:
ALTERNATIVE PARTS R1 & C1 FOR LON FREQUENCY WARPING ARE SUPPLIED SEPARATELY WITH AMPLIFIER.

* IN AMPLIFIER AS SHIPPED.

ASSOCIATED DWGS
GC-1936-ASSEMBLY
WC-1090-WIRING DIAGRAM

UNLESS OTHERWISE SPECIFIED
REMOVE ALL BURRS BREAK SHARP CORNERS
TOLERANCES OF ALL FRACT. DIM. TO BE ± 1/64
TOLERANCES OF ALL DECIMAL DIM. TO BE ± .005

SCALE

SCHEMATIC
SOUNDHEAD AMPLIFIER

INTERNATIONAL PROJECTOR CORPORATION
55 LA FRANCE AVENUE
BLOOMFIELD NEW JERSEY

DR. A.D. CH'K. APP'D.

PRODUCT CLASS

WC-1089

"ALBERENE" NO. 1001 ALTEC CO., N.Y.

Issued by
Engineering Department
Printed in U. S. A.

ALTEC SERVICE CORPORATION
SIMPLEX

WC-1090

DRAWN 1-11-50
ISSUE 1 1-11-50

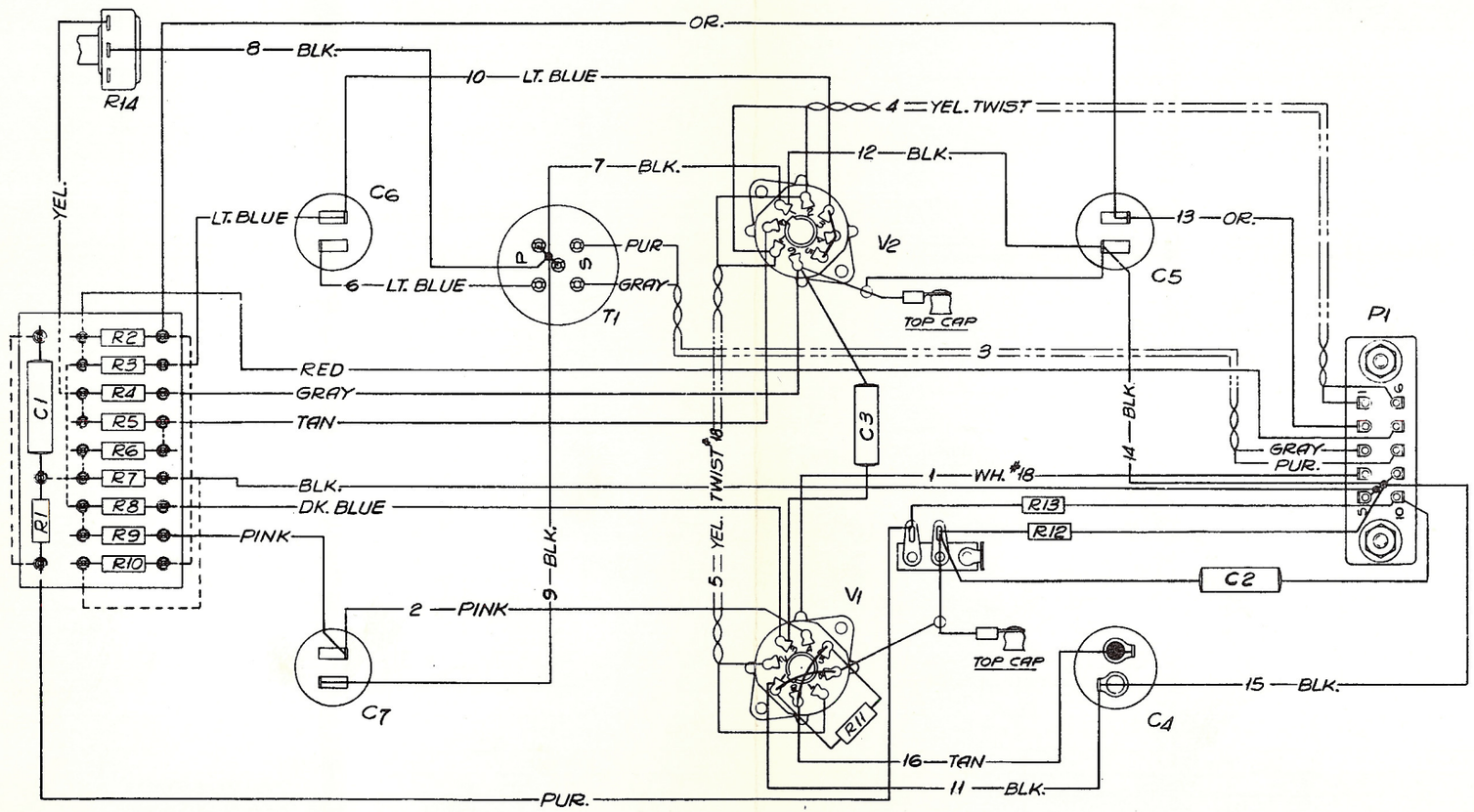

WIRE #	FROM	TO	LENGTH	COLOR	PART #
1	P1/4	V1	3	WHITE	EW-951
2	V1/4	C7	3	PINK	EW-955
3	P1/3&8	T1	4	GRAY PUR TWIST	EW-944
4	V2/2&7	P1/1&6	5½	YEL. TWIST	EW-942
5	V2/2&7	V1/1&7	5½	YEL. TWIST	EW-942
6	C6	T1	3	LT. BLUE	EW-912
7	V2/1	T1	3	BLACK	EW-920
8	R14	T1	4½	BLACK	EW-920
9	T1	C7	3	BLACK	EW-920
10	V2/3	C6	4	LT. BLUE	EW-912
11	V1/1	C4	3	BLACK	EW-920
12	V2/1	C5	3	BLACK	EW-920
13	P1/2	C5	3	ORANGE	EW-956
14	P1/9	C5	3	BLACK	EW-920
15	P1/9	C4	3	BLACK	EW-920
16	V1/8	C4	3	TAN	EW-913

	SYMBOL	I.P.C. PT.#	DESCRIPTION
*	R1	PA-2047	RESISTOR, 510K, 1W, CARBON
	R1	PA-2074	" , 2M, 1W, "
	R1	PA-2639	" , 3.9M, 1W, "
	R2	PA-2048	" , 1M, 1W, "
	R3	PA-2054	" , 390K, 1W, "
	R4	PA-2048	" , 1M, 1W, "
	R5	PA-2052	" , 2K, 1W, "
	R6	PA-2053	" , 12K, 1W, "
	R7	PA-1007	" , 3.9K, 1W, "
	R8	PA-2055	" , 27OK, 1W, "
	R9	PA-2057	" , 1.5K, 1W, "
	R10	PA-2521	" , 330K, 1W, "
	R11	PA-2051	" , 1K, 1W, "
	R12	PA-2048	" , 1M, 1W, "
	R13	PA-2074	" , 2M, 1W, "
	R14	PA-2062	" , 10K, 2W, POTENTIOMETER

	SYMBOL	I.P.C. PT.#	DESCRIPTION
*	C1	PA-2637	CAPACITOR, .005 mfd., 600V., TUB., PAPER
	C1	PA-2120	" , .001 mfd., 600V., " "
	C1	PA-2638	" , .0005 mfd., 600V., " "
	C2	PA-2058	" , .01 mfd., 600V., " "
	C3	PA-2058	" , .01 mfd., 600V., " "
	C4	PA-2617	" , .25 mfd., 25V., CAN, ELECT.
	C5	PA-2117	" , .05 mfd., 400V., CAN, PAPER
	C6	PA-[illegible]	" , .05 mfd., 400V., " "
	C7	PA-[illegible]	" , .05 mfd., 400V., " "
	T1	PA-2[illegible]	OUTPUT TRANSFORMER, 500Ω
	P1	PA-206[illegible]	MALE PANEL CONNECTOR, 10 PRONG
	V1	PA-2118	VACUUM TUBE, 6J7
	V2	PA-2118	" " , 6J7

STRAPS ARE EW-692-#20 SOLID TINNED COPPER WIRE
WIRES ARE #20 AWG, UNLESS OTHERWISE SPECIFIED.
COVER STRAPS & RESISTOR & CAPACITOR LEADS
WITH EW-949, #20 FIBERGLAS SLEEVING.

NOTE: ALTERNATIVE PARTS R1 & C1 FOR LOW FREQUENCY WARPING ARE SUPPLIED SEPARATELY WITH AMPLIFIER.

* IN AMPLIFIER AS SHIPPED.

ASSOCIATED DWGS: OC-1936 ASSEMBLY
WC-1099 SCHEMATIC

SCALE ~

WIRING DIAGRAM
P.E.C. AMPLIFIER

INTERNATIONAL PROJECTOR CORPORATION
88 LA FRANCE AVENUE
BLOOMFIELD NEW JERSEY

DR. A.D. CH'K. APP'D

WC-1090

UNLESS OTHERWISE SPECIFIED
REMOVE ALL BURRS BREAK SHARP CORNERS
TOLERANCES OF ALL FRACT. DIM. TO BE ± 1/64
TOLERANCES OF ALL DECIMAL DIM. TO BE ± .005

PRODUCT CLASS

"ALTEC" REG. U.S. PAT. OFF.

Issued by
Engineering Department
Printed in U.S.A.

WC-1087

ISSUE 1 10-7-57

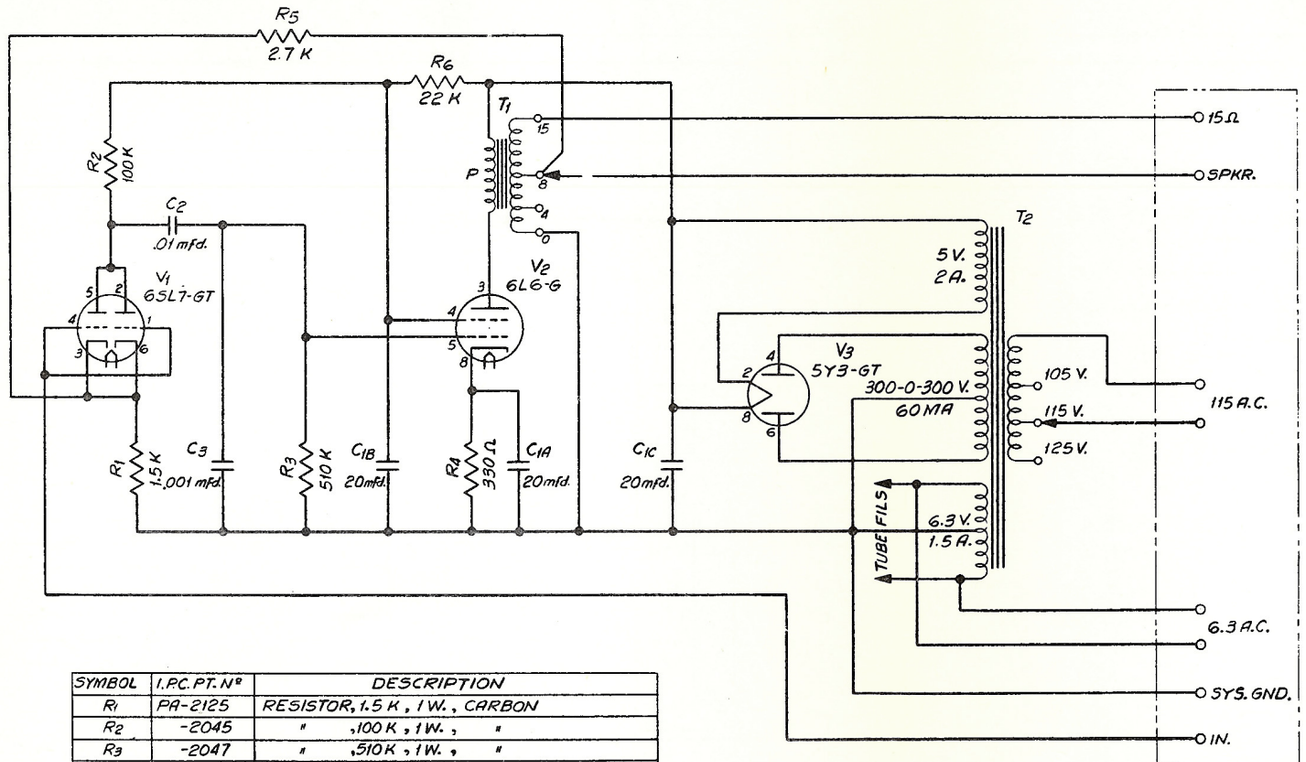

SYMBOL	I.P.C. PT. Nº	DESCRIPTION	
R1	PA-2125	RESISTOR, 1.5 K, 1W., CARBON	
R2	-2045	" ,100 K, 1W., "	
R3	-2047	" ,510 K, 1W., "	
R4	-2128	" ,330 Ω, 2W., "	
R5	-2127	" ,2.7 K, 1W., "	
R6	-2126	" ,22 K, 1W., "	
C1A	-2085	CAPACITOR, ELEC.	20 mfd. 25 V.
C1B			20 mfd. 450 V.
C1C			20 mfd. 450 V.
C2	-2058	CAPACITOR, .01 mfd., 600 V., TUBULAR, PAPER	
C3	-2120	" ,.001 mfd., 600 V., " , "	
T1	PB-2124	OUTPUT TRANSFORMER	
T2	-2123	POWER "	
V1	PA-1055	VACUUM TUBE 6SL7-GT	
V2	-2129	" " 6L6-G	
V3	-2130	" " 5Y3-GT	

LEGEND: K=1000 Ω

REFERENCE DWGS.
AMB-1029-MONITOR AMPLIFIER ASSY.
WC-1039-WIRING DIAGRAM

UNLESS OTHERWISE SPECIFIED
REMOVE ALL BURRS BREAK SHARP CORNERS
TOLERANCES OF ALL FRACT. DIM. TO BE ± 1/64
TOLERANCES OF ALL DECIMAL DIM. TO BE ± .005

"ALTEC" REG. U.S. PAT. OFF., N.Y. 6

SCALE

SCHEMATIC
MONITOR AMPLIFIER

INTERNATIONAL PROJECTOR CORPORATION
85 LA FRANCE AVENUE
BLOOMFIELD NEW JERSEY

DR. A.D. CH'K. APP'D. EC

PRODUCT CLASS F

WC-1087

Issued by
Engineering Department
Printed in U. S. A.

ALTEC SERVICE CORPORATION
SIMPLEX

WC-1093

ISSUE 1 10-17-49

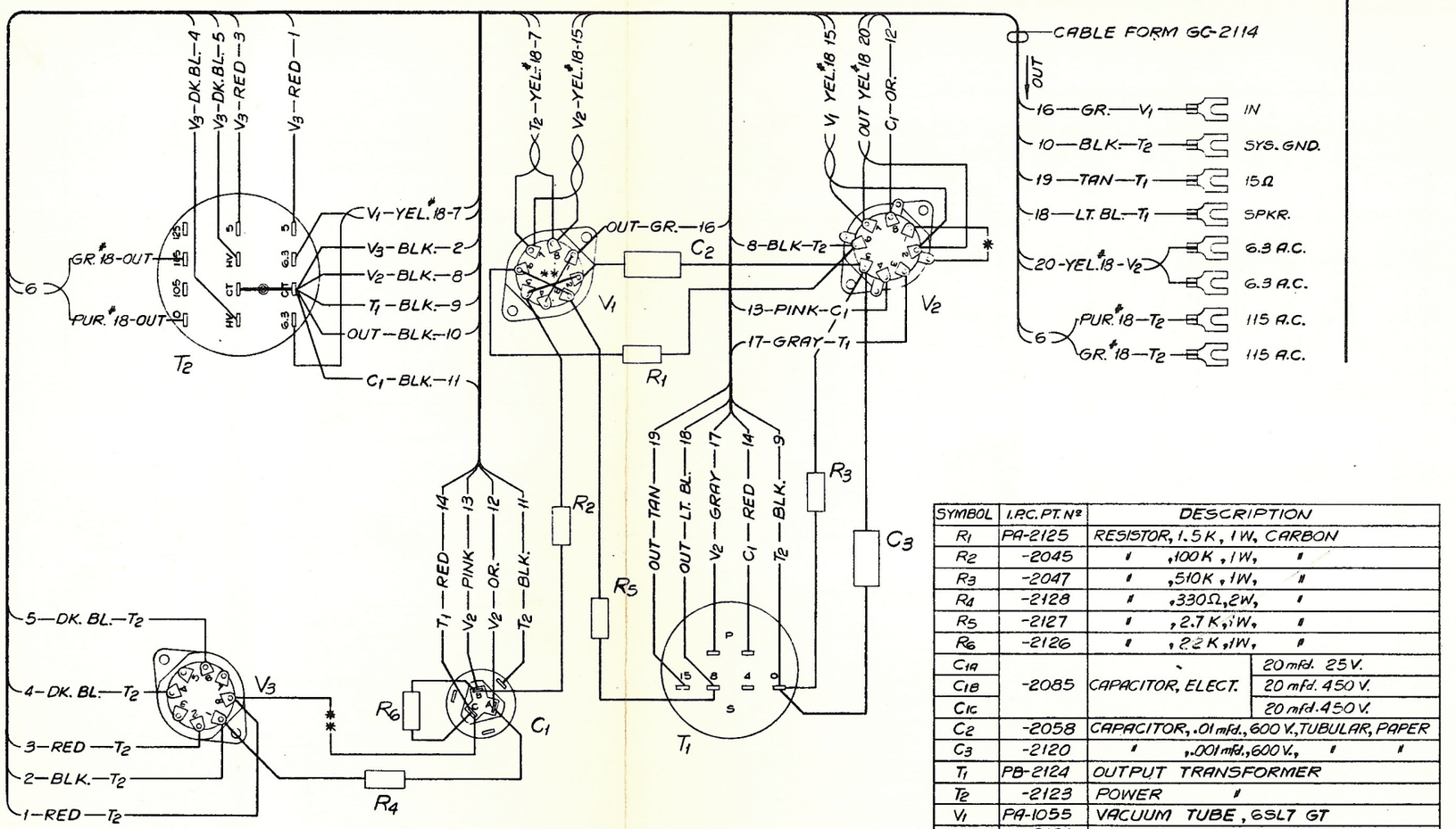

SYMBOL	I.P.C. PT. Nº	DESCRIPTION	
R1	PA-2125	RESISTOR, 1.5 K, 1W, CARBON	
R2	-2045	" ,100 K, 1W, "	
R3	-2047	" ,510 K, 1W, "	
R4	-2128	" ,330Ω, 2W, "	
R5	-2127	" , 2.7 K, 1W, "	
R6	-2126	" , 2.2 K, 1W, "	
C1A	-2085	CAPACITOR, ELECT.	20 mfd. 25 V.
C1B			20 mfd. 450 V.
C1C			20 mfd. 450 V.
C2	-2058	CAPACITOR, .01 mfd., 600 V., TUBULAR, PAPER	
C3	-2120	" ,.001 mfd., 600 V., " "	
T1	PB-2124	OUTPUT TRANSFORMER	
T2	-2123	POWER "	
V1	PA-1055	VACUUM TUBE, 6SL7 GT	
V2	-2129	" " , 6L6 G	
V3	-2130	" " , 5Y3 GT	

ALL WIRES ARE Nº 20 A.W.G., UNLESS OTHERWISE SPECIFIED.
ALL WIRES ARE TABULATED ON CABLE FORM DWG.
COVER LEADS OF RESISTORS & CAPACITORS WITH EW-949, Nº 20 FIBERGLAS SLEEVING.

* EW-692-Nº 20 SOLID TINNED COPPER WIRE.
** EW-692 WIRE COVERED WITH EW-949 SLEEVING.
⊕ EW-192 Nº 16 SOLID TINNED COPPER WIRE. (JUMPER ON T2)

REFERENCE DWGS.
AMB-1029 MON. AMP. ASS'Y.
WC-1087 SCHEMATIC

SCALE

WIRING DIAGRAM
MONITOR AMPLIFIER

INTERNATIONAL PROJECTOR CORPORATION
55 LA FRANCE AVENUE
BLOOMFIELD NEW JERSEY

DR. A.D. CH'K. APP'D.

PRODUCT CLASS

WC-1093

UNLESS OTHERWISE SPECIFIED
REMOVE ALL BURRS BREAK SHARP CORNERS
TOLERANCES OF ALL FRACT. DIM. TO BE ± 1/64
TOLERANCES OF ALL DECIMAL DIM. TO BE ± .005

"ALTEC" REG. U.S. PAT. OFF. U.S.A.

Issued by
Engineering Department
Printed in U.S.A.

1. GENERAL

1.1 The AM-1040 Amplifier used in the X-L25-D and X-L25X-D Drive-In Systems is the Simplex AM-1018 (Altec Lansing 287-W) Amplifier equipped with a TL-216 Input Transformer.

1.2 Until advised to the contrary, the TL-216 Transformer will be shipped separately and should be mounted in the holes already provided in the chassis of the AM-1018 Amplifier and connected to the amplifier as per Altec Lansing Drawing 3741, file 50.03, Amplifier 287-W, in the Altec Lansing bulletins.

1.3 The input of the TL-216 Transformer should be strapped for 14 ohms.

Issued by
Engineering Department
Printed in U.S.A.
April 12, 1950
Issue #1

NS-167

ISSUE: 1 3-5-54

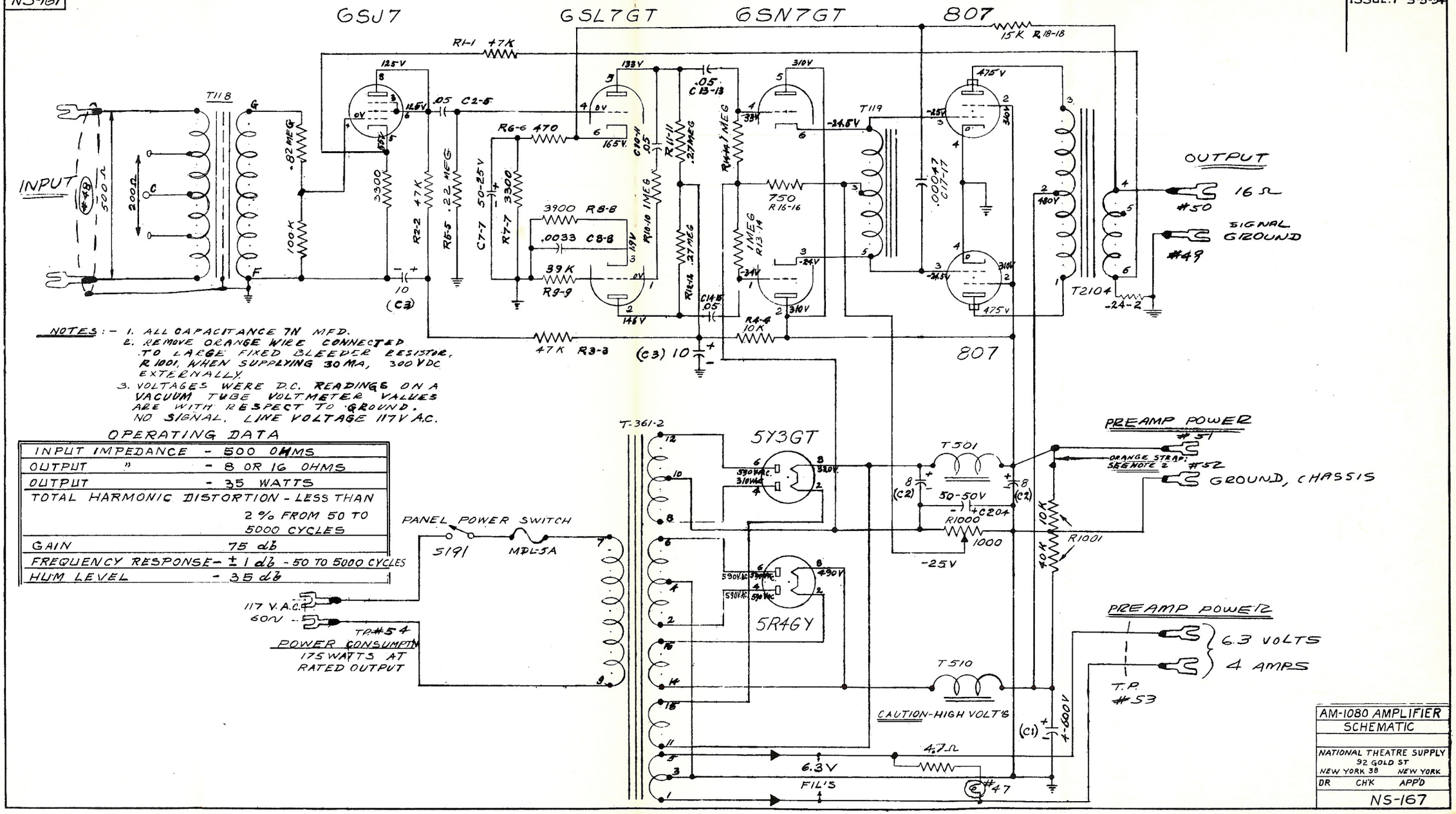

NOTES:-
1. ALL CAPACITANCE IN MFD.
2. REMOVE ORANGE WIRE CONNECTED TO LARGE FIXED BLEEDER RESISTOR, R 1001, WHEN SUPPLYING 30 MA, 300 VDC EXTERNALLY.
3. VOLTAGES WERE D.C. READINGS ON A VACUUM TUBE VOLTMETER VALUES ARE WITH RESPECT TO GROUND. NO SIGNAL. LINE VOLTAGE 117 V A.C.

OPERATING DATA

INPUT IMPEDANCE	- 500 OHMS
OUTPUT "	- 8 OR 16 OHMS
OUTPUT	- 35 WATTS
TOTAL HARMONIC DISTORTION	- LESS THAN 2% FROM 50 TO 5000 CYCLES
GAIN	75 db
FREQUENCY RESPONSE	- ± 1 db - 50 TO 5000 CYCLES
HUM LEVEL	- 35 db

AM-1080 AMPLIFIER SCHEMATIC			
NATIONAL THEATRE SUPPLY 92 GOLD ST NEW YORK 38 NEW YORK			
DR	CH'K	APP'D	
NS-167			

1. DESCRIPTION

1.1 The NTS-1125 Amplifier is a modified Bogen HO-125 Amplifier and is to be used only for Drive-In Theatre Installations with In-Car Speakers.

2. CHARACTERISTICS

2.1 This amplifier delivers its rated power output of 125 watts over a limited frequency range with 5% harmonic distortion and as such will handle a maximum of 500 of these In-Car Speakers.

2.2 National Theatre Supply Headquarters advises that this amplifier is not to be used in regular theatre installations as such use would lead to continual trouble and complaints due to its limited frequency response and high noise level distortion.

Issued by
Engineering Department
Printed in U.S.A.

May 2, 1950
Issue #1

NS-128

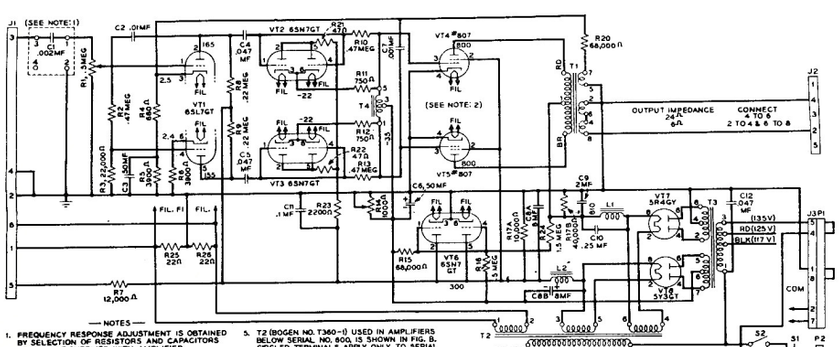

— NOTES —

1. FREQUENCY RESPONSE ADJUSTMENT IS OBTAINED BY SELECTION OF RESISTORS AND CAPACITORS FROM A KIT SUPPLIED WITH AMPLIFIER.
2. ALL VOLTAGE READINGS TAKEN WITH A 20,000 OHMS PER VOLT VOLTMETER AND CONTROLS SET AT ZERO. PLATE VOLTAGE ON VT4 AND VT5 IS 800 VOLTS (NO SIGNAL), 750 VOLTS (50 WATTS), 700 VOLTS (125 WATTS).
3. THE SCHEMATIC SHOWN IS FOR AMPLIFIERS BEGINNING WITH SERIAL NO. 850
4. T1 (BOGEN NO. T 288-2) USED IN AMPLIFIERS ABOVE SERIAL NO. 350. BOGEN NO. T 288-1, USED IN PREVIOUS AMPLIFIERS, IS SHOWN IN FIG. A.
5. T2 (BOGEN NO. T360-1) USED IN AMPLIFIERS BELOW SERIAL NO. 600, IS SHOWN IN FIG. B. CIRCLED TERMINALS APPLY ONLY TO SERIAL NOS. 98 TO 120 AND 205 TO 227 INCLUSIVE.
6. T3 (BOGEN NO. T357-1) USED IN AMPLIFIERS BELOW SERIAL NO. 600, NO. T 357-3 AND NO. T357-5 USED AMPLIFIERS BETWEEN SERIAL NO. 601 AND NO. 849. REFER TO FIG. C.

REDRAWN FROM ISSUE 2 WITH THE FOLLOWING CHANGES:
T2 WAS T360-1
T3 WAS T357-1
C10 WAS .5 MF, 600 V
D-D PART-LOGOE
C11 WAS .1MF, 2 KV AND IN SERIES WITH 1K RESIS 2.
R14 WAS .47 MEG, ½ WATT
R2 WAS .47 MEG, ½ WATT
R21, R22, R23, R24, R25, R26, R34 AND R37 IS WERE NOT SHOWN
ADDED 2, 3 AND 4 REVISED

ISSUE: 3	10-27-69	JFA

C4, C5 WERE .05MF, 810V AND 800 V WERE 835V AND 825V RESP. T3 WAS BOGEN T 357-2. C12 WAS 1 MF. NOTE: 5 REVISED NOTE: 6 ADDED AND FIG. C CHANGED TO AGREE

ISSUE: 4	4-2-70	CM

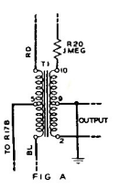

FIG A

BOGEN NO T288-1

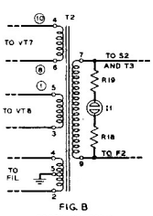

FIG. B

BOGEN NO T360-1

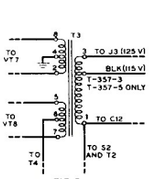

FIG.C

BOGEN NO. T357-1, T-357-3, T-357-5

SYMBOL NO.	PART NO.	DESCRIPTION
C1		CAPACITOR, .002 MF. 500 VOLTS
C2		CAPACITOR, .01 MF. 600 VOLTS, C-D #GT851
C3, C6		CAPACITOR, 50 MF. 50 VOLTS, C-D #BR 505
C4, C5, C12		CAPACITOR, .047 MF. 600 VOLTS, C-D #GT6547
C7		CAPACITOR, .001 MF. 600 VOLTS, C-D #GT601
C8A, C8B		CAPACITOR, 8-8 MF. 500 VOLTS, C-D #EB10018
C9		CAPACITOR, 2 MF. 1000 VOLTS, C-D #T-10020
C10		CAPACITOR, .25 MF. 1200 VOLTS, C-D #MD-12P25
C11		CAPACITOR, .1 MF. 600 VOLTS, C-D #DYRT-8010
F1		FUSE, 2.5 AMP. NO. MDL-2.5
F2		FUSE, 1.5 AMP. NO. MDL-1.6
I1		PILOT LIGHT, NE 51
J1		RECEPTACLE, INPUT, 6 PRONG
J2		RECEPTACLE, OUTPUT, 5 PRONG
L1		REACTOR, BOGEN #T312 BU
L2		REACTOR, BOGEN #T 301 B
P2		PLUG, AC
R1, R16		POTENTIOMETER, .5 MEG., IRC #Q13-133
R2, R10, R13		RESISTOR, .47 MEG., ½ WATT, IRC #BTS-470 K
R3		RESISTOR, 22,000 OHMS, ½ WATT, IRC #BTS-22 K

SYMBOL NO.	PART NO.	DESCRIPTION
R4		RESISTOR, 680 OHMS, ½ WATT, IRC #BTS-680
R5, R6		RESISTOR, 3900 OHMS, 1 WATT, IRC #BTA-3900-5%
R7		RESISTOR, 12,000 OHMS, ½ WATT, IRC #BTS-12 K
R8, R9		RESISTOR, .22 MEG., ½ WATT, IRC #BTS-220 K
R11, R12		RESISTOR, 750 OHMS, 2 WATT, IRC #BTB-750
R14		RESISTOR, 1000 OHMS, 10 WATT, IRC 1¾ AA-1000
R16, R18		RESISTOR, 47,000 OHMS, ½ WATT, IRC #BTS-47 K
R17A, R17B		RESISTOR, 50,000 OHMS, 50 WATT, IRC #EPA-50 K
R15, R20		RESISTOR, 68,000 OHMS, 2 WATT, IRC #BTB-68 K
R21, R22		RESISTOR, 47 OHMS, 1 WATT IRC #BTA-47
R23		RESISTOR, 2200 OHMS, 2 WATT IRC #BTB-2200
R24		RESISTOR, 1.5 MEG, 2 WATT IRC #BTB-1.5 M
R25, R26		RESISTOR 22 OHMS, ½ WATT IRC #BTS-22
S1		SWITCH, D.P.S.T. H & H #80800
S2		SWITCH INTERLOCK, H & H #80360
T1		TRANSFORMER, OUTPUT, BOGEN #T289-2
T2		TRANSFORMER, FILAMENT, BOGEN #T360-3
T3		TRANSFORMER, PLATE, BOGEN #T357-6
T4		TRANSFORMER, DRIVER, BOGEN #T119B4
V1		VACUUM TUBE, 6SL7GT
V2, V3, V6		VACUUM TUBE, 6SN7GT
V4, V5		VACUUM TUBE, #807
V7		VACUUM TUBE, 5R4GY
V8		VACUUM TUBE, 5Y3GT

ALTEC SERVICE CORPORATION
STUDIEX

NTS-1125 AMPLIFIER
SCHEMATIC

NATIONAL THEATRE SUPPLY
92 GOLD ST.
NEW YORK, N.Y.

DR	CHK.	APP'D CM

NS-128

40.03
AMPLIFIER, NTS-1125

Printed in U.S.A.

1. DESCRIPTION

Type - AM-149 - Rotary type for three projectors - 360° continuous clockwise rotation with "OFF" position provided between successive operation positions.
AM-165 - Rotary type for two projectors (normal) - 60° oscillating movement with "OFF" position provided between successive operation positions.
Use - Provides changeover for AM-148 Volume Control Amplifiers.
Size - 10-1/4" high x 8-1/4" wide x 5" deep.
Weight - 5 lbs.
Accessories - AM-2129 Extension Volume Control with AM-149 Cabinet and
AM-2139 " " " " AM-165 "

2. INSTALLATION

A. The AM-149 Cabinet should be installed adjacent to the observation port for the middle projector and the AM-2129 parts installed per sketch below.

B. The AM-165 cabinet should be installed adjacent to the observation port for the left projector and the AM-2139 parts installed per sketch below.

3. OPERATION

Set the changeover switch so that the machine being threaded is inoperative. Changeover is then made when the incoming machine is up to speed by rotating the knob at either machine position until the number corresponding to the incoming machine's number is opposite the index on the cabinet.

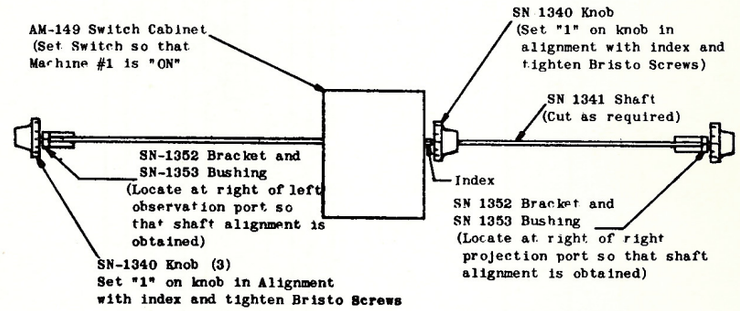

NOTE: A second Bracket and Bushing (supplied with each AM-2129 or AM-2139) may be installed at the center of the shaft if desired.

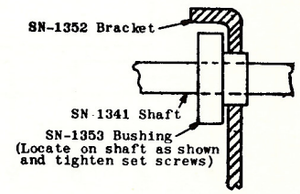

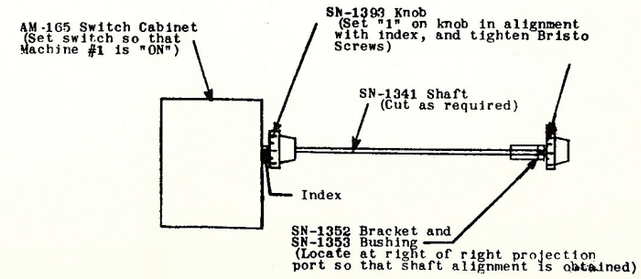

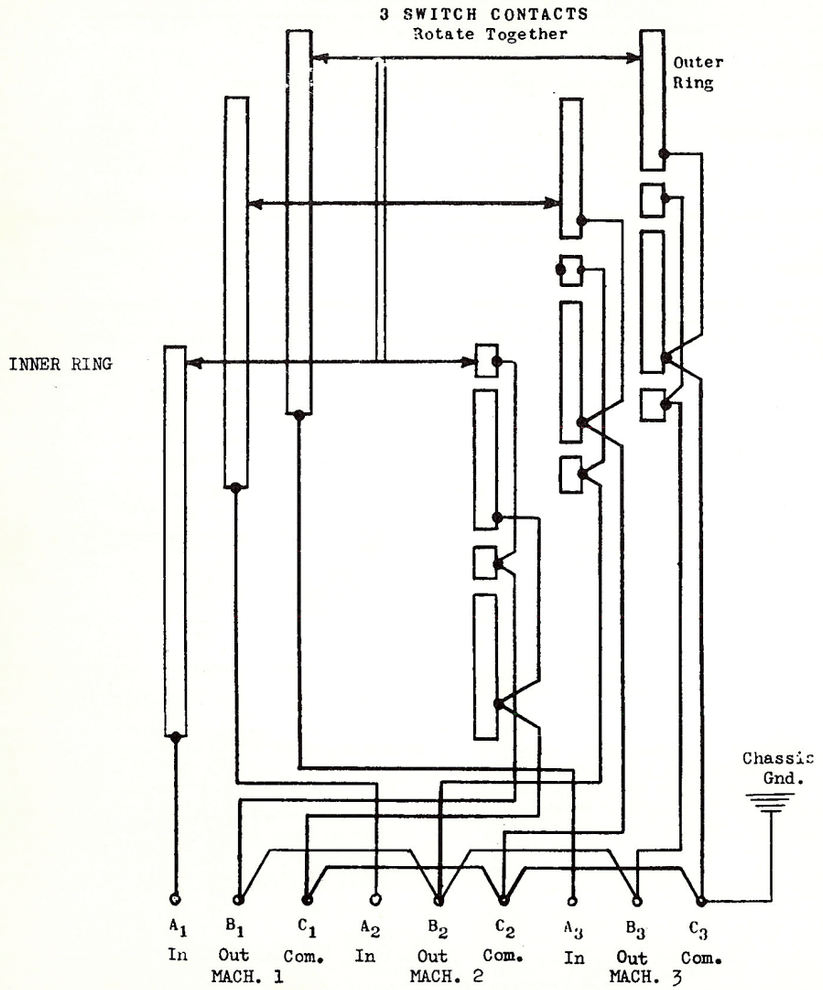

AM-149 & 165 SWITCH CABINET SCHEMATIC

NOTE: AM-165 normally two machine switch, but can be modified for three machines with minor mechanical changes.

WD-1098

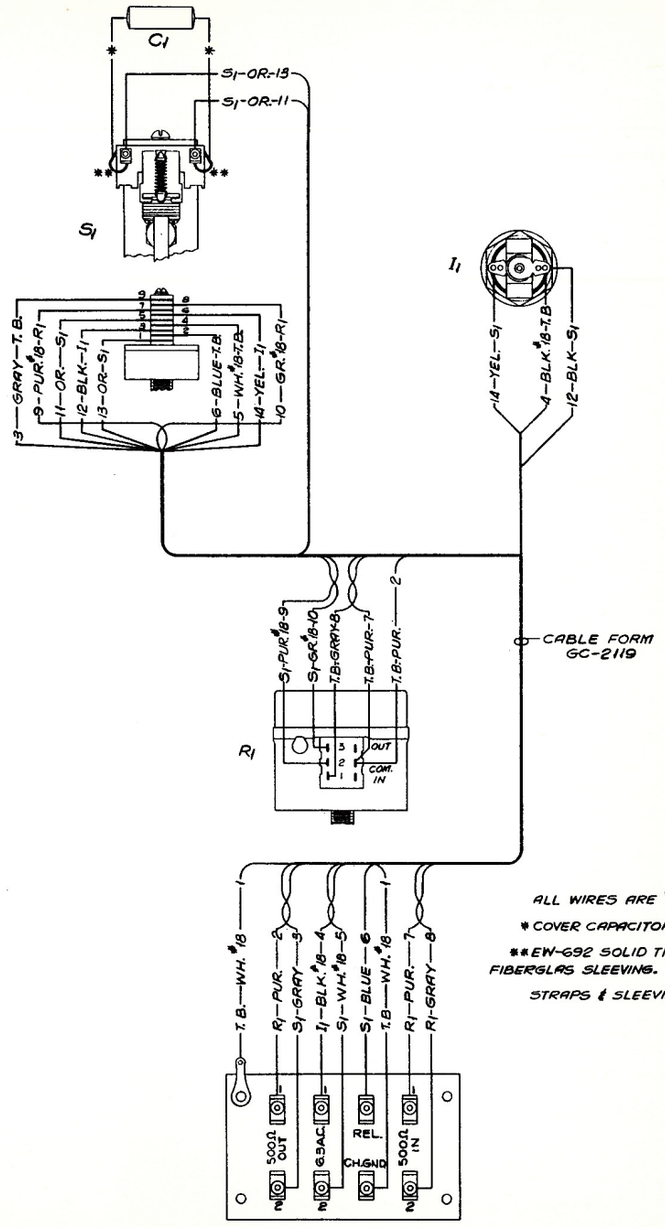

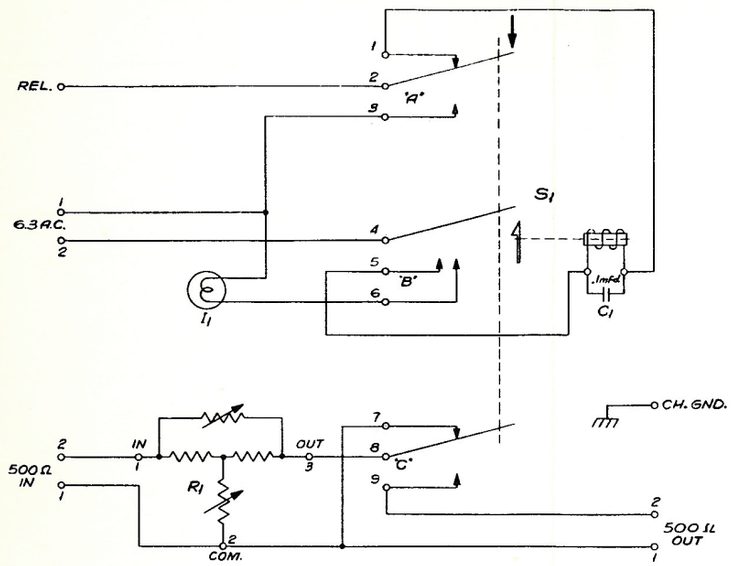

S1 { 'A' MOMENTARY CONTACTS
'B' & 'C' LATCHING CONTACTS

SYMBOL	PART Nº	DESCRIPTION
I1	PA-2425	INDICATOR LAMP, 6-8 V.
R1	PA-2276	'TEE' ATTENUATOR, 500Ω
S1	PC-2679	CHANGEOVER SWITCH
C1	PA-2099	CAPACITOR .1mFD., 400 V.D.C.W. PAPER, TUBULAR

ALL WIRES ARE #20 A.W.G., UNLESS OTHERWISE SPECIFIED.

* COVER CAPACITOR LEADS WITH EW-949 FIBERGLAS SLEEVING.

** EW-692 SOLID TINNED COPPER WIRE COVERED WITH EW-949 FIBERGLAS SLEEVING.

STRAPS & SLEEVING ARE TABULATED ON CABLE FORM DWG.

REFERENCE DWG. AMC-197 CHANGEOVER CABINET ASS'Y

UNLESS OTHERWISE SPECIFIED
REMOVE ALL BURRS BREAK SHARP CORNERS
TOLERANCES OF ALL FRACT. DIM. TO BE ± 1/64
TOLERANCES OF ALL DECIMAL DIM. TO BE ± .005

SCALE
DRAWN 11-3-49
WIRING DIAGRAM &
SCHEMATIC
CHANGEOVER CABINET
INTERNATIONAL PROJECTOR CORPORATION
88 LA FRANCE AVENUE
BLOOMFIELD NEW JERSEY
DR. A.D. CH'K. APP'D.
PRODUCT CLASS F
WD-1098

GB-1920

ISSUE 1 10-21-49
(A) ADDED "SHIELD-17 EW-692"
(B) PUR-GREY SHIELDED TWIST WAS "PUR GREY-TWIST"
J.S. | | |
ISSUE: 2 1-19-50
"A.C. GND" ON TERMINAL BOARDS WAS "115 A.C."
A.D. | | |
ISSUE 3 3-23-50

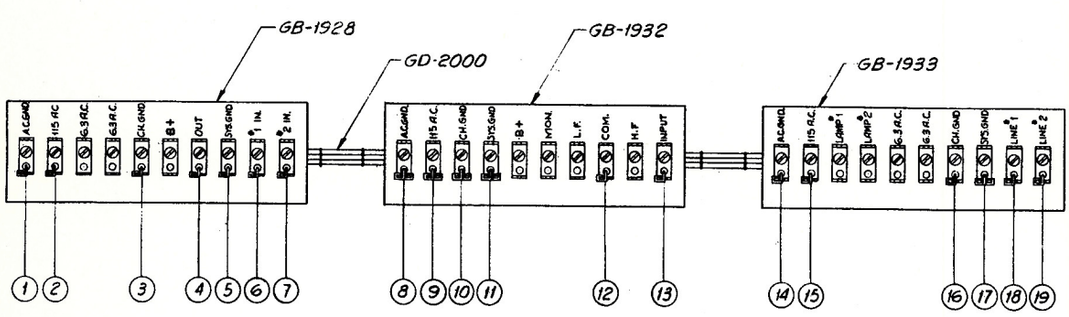

FROM	TO	COLOR
1	8	PUR. (TWIST)
2	9	GRN. (TWIST)
3	10	WHITE
4	13	BLUE
5	17	BLACK
6	18	PUR (SHIELDED TWIST) (B)
7	19	GRAY (SHIELDED TWIST) (B)
8	14	PUR. (TWIST)
9	15	GRN. (TWIST)
10	16	WHITE
11	17	BLACK
11	12	"
(B) SHIELD	17	EW-692

THREAD WIRES THRU EYELETS & SLOTS, WRAP 1/2 TURN AROUND POST & SOLDER.

Note: On "Pur-Gray" shielded leads of cable connecting to #1 IN and #2 IN:
Change "Pur" to "Blk or Pur"
Change "Gray" to "RD or Gray"

Issued by Engineering Department Printed in U.S.A.

UNLESS OTHERWISE SPECIFIED
REMOVE ALL BURRS BREAK SHARP CORNERS
TOLERANCES OF ALL FRACT. DIM. TO BE ± 1/64
TOLERANCES OF ALL DECIMAL DIM. TO BE ± .005

C

SCALE 1:2

TERMINAL BOARD AND CABLE FORM ASS'Y. SINGLE AMP. CAB. KIT.

INTERNATIONAL PROJECTOR CORPORATION
85 LA FRANCE AVENUE
BLOOMFIELD NEW JERSEY

DR. A.D. CH'K. APP'D

PRODUCT CLASS F

GB-1920

ALTEC SERVICE CORPORATION SIMPLEX

AM-1092 CABINET KIT 40.15

WC-1099

ISSUE		
1	2-2-50	
#1 WAS 48-2		
2	4-4-50	

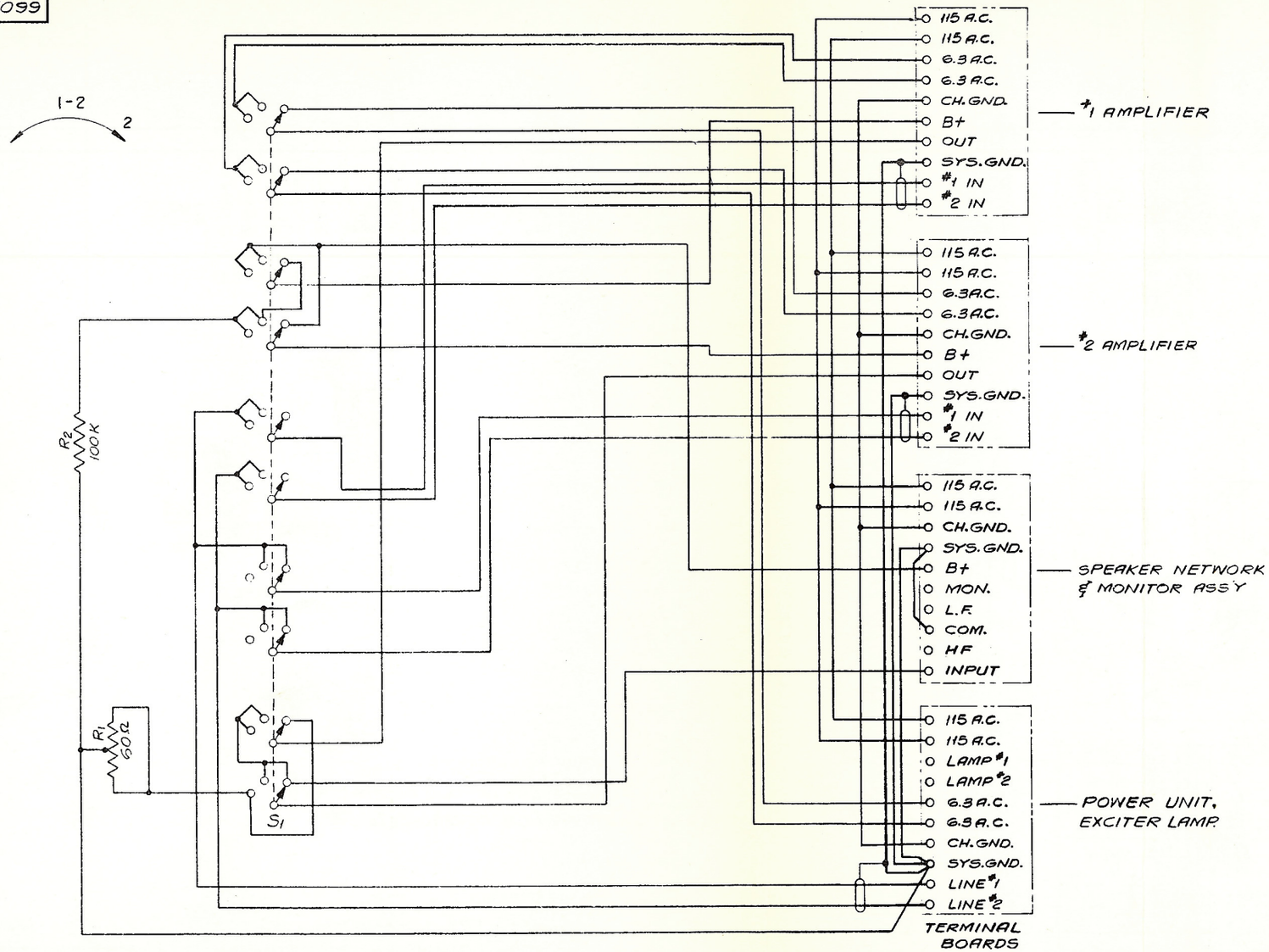

SYMBOL	I.R.C. PT. Nº	DESCRIPTION
R_1	PA-2180	RESISTOR, 60Ω, 25W, WIREWOUND
R_2	-2076	" ,100K, 2W, CARBON
S_1	-2179	ROTARY SWITCH, 12 POLE, 3 POS.

REFERENCE DWG.
GC-1921 TERM. BOARD & SELECTOR SWITCH ASS'Y.

SCALE
DRAWN 7-21-49

SCHEMATIC
TERM. BOARD & SELECTOR SWITCH ASS'Y

INTERNATIONAL PROJECTOR CORPORATION
55 LA FRANCE AVENUE
BLOOMFIELD NEW JERSEY

DR. A.D. CH'K. APP'D.

PRODUCT CLASS F

WC-1099

UNLESS OTHERWISE SPECIFIED
REMOVE ALL BURRS. BREAK SHARP CORNERS
TOLERANCES OF ALL FRACT. DIM. TO BE ± 1/64
TOLERANCES OF ALL DECIMAL DIM. TO BE ± .005

Issued by
Engineering Department
Printed in U.S.A.

ALTEC SERVICE CORPORATION
SIMPLEX

GC-1921

ISSUE 1	2-2-50
AC.GND. ON TERMINAL BOARDS NOS 7 TO 15 -	
A.D.	
ISSUE 2.	3-21-50

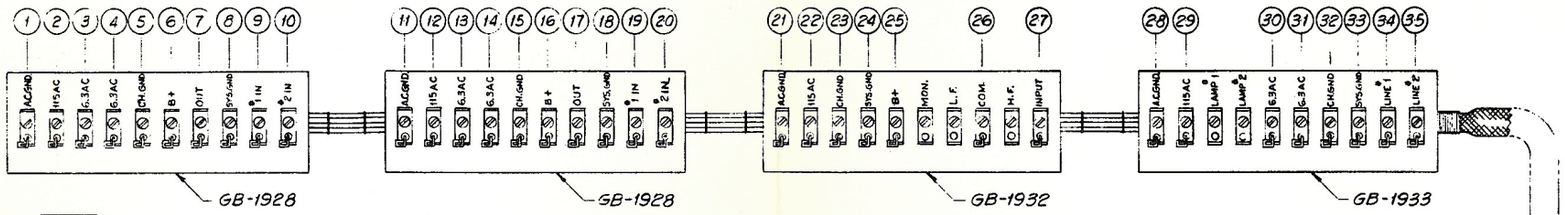

THREAD WIRES THRU EYELETS & SLOTS,
WRAP $\frac{1}{2}$ TURN AROUND POST & SOLDER.

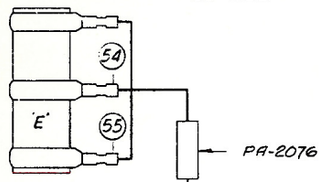

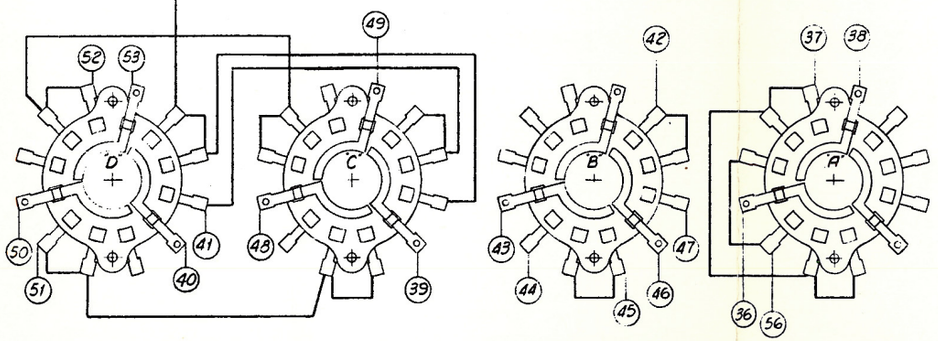

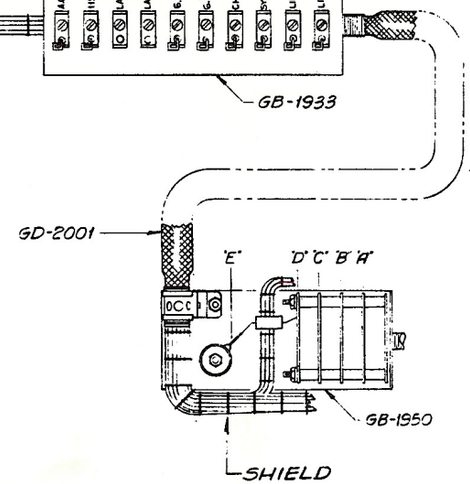

FROM	TO	COLOR
1	11	PUR } TWIST
2	12	GRN } TWIST
11	21	PUR } TWIST
12	22	GRN } TWIST
21	28	PUR } TWIST
22	29	GRN } TWIST
3	45	YEL } TWIST
4	42	YEL } TWIST
5	15	WHITE
15	23	"
23	32	"
6	39	RED
7	36	GREEN
8	33	BLACK
18	33	"
24	33	"
33	54	"

FROM	TO	COLOR
24	26	BLACK
9	48	PUR } SH.
10	49	GRAY } TWIST
13	47	YEL } TWIST
14	44	YEL } TWIST
16	40	RED
17	38	BLUE
19	50	PUR } SH.
20	53	GRAY } TWIST
25	41	RED
27	37	ORANGE
30	46	YEL } TWIST
31	43	YEL } TWIST
34	51	PUR } SH.
35	52	GRAY } TWIST
55	56	WHITE
SHIELD	54	BLACK

STRAP REQUIREMENTS

17' EW-692, N°20 GA. SOLID TINNED COPPER WIRE

9' EW-949, N°20 FIBREGLAS SLEEVING

Note: On all "Pur-Gray" SH Twist Pairs:
Change "Pur" to BLK or Pur"
Change "Gray" to "RD or Gray"

REFERENCE DWG. WC-1099 SCHEMATIC

SCALE 1:2

TERM. BOARD & SELECTOR SWITCH ASSEMBLY.
DUAL AMP. CAB. KIT

INTERNATIONAL PROJECTOR CORPORATION
55 LA FRANCE AVENUE
BLOOMFIELD NEW JERSEY

DR. A.D. CH'K. APP'D.

PRODUCT CLASS F

GC-1921

UNLESS OTHERWISE SPECIFIED
REMOVE ALL BURRS BREAK SHARP CORNERS
TOLERANCES OF ALL FRACT. DIM. TO BE ± 1/64
TOLERANCES OF ALL DECIMAL DIM. TO BE ± .005

Issued by
Engineering Department
Printed in U.S.A.

WC-1101

DRAWN 12-29-49
ISSUE 1 2-1-50

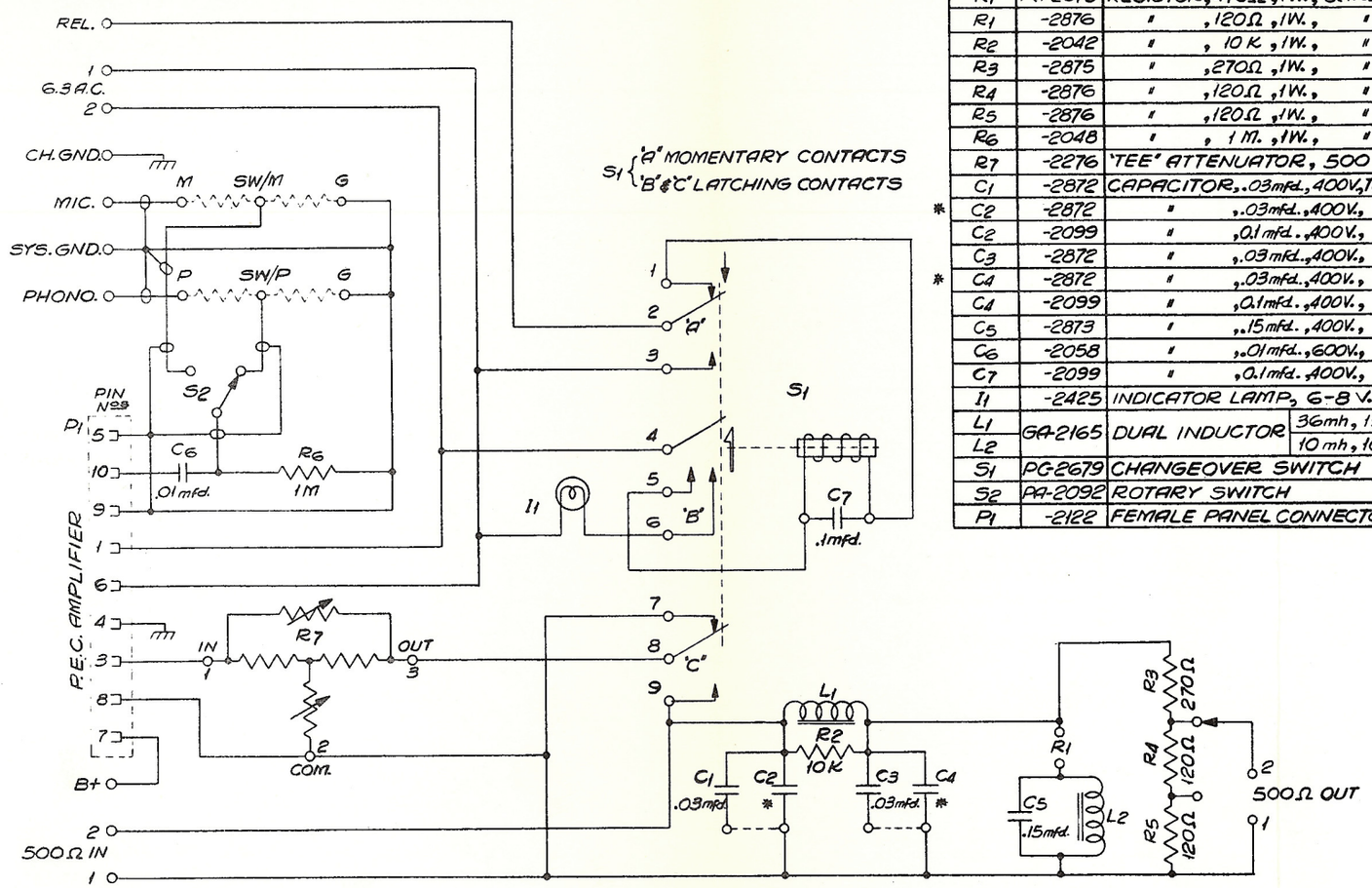

SYMBOL	PART #	DESCRIPTION
R1	PA-2075	RESISTOR, 470Ω, 1W., CARBON
R1	-2876	" ,120Ω, 1W., "
R2	-2042	" , 10K, 1W., "
R3	-2875	" ,270Ω, 1W., "
R4	-2876	" ,120Ω, 1W., "
R5	-2876	" ,120Ω, 1W., "
R6	-2048	" , 1M., 1W., "
R7	-2276	'TEE' ATTENUATOR, 500Ω
C1	-2872	CAPACITOR, .03mfd., 400V, TUBULAR, PAPER
* C2	-2872	" ,.03mfd., 400V., " , "
C2	-2099	" ,0.1 mfd., 400V., " , "
C3	-2872	" ,.03 mfd., 400V., " , "
* C4	-2872	" ,.03mfd., 400V., " , "
C4	-2099	" ,0.1mfd., 400V., " , "
C5	-2873	" ,.15mfd., 400V., " , "
C6	-2058	" ,.01mfd., 600V., " , "
C7	-2099	" ,0.1mfd., 400V., " , "
I1	-2425	INDICATOR LAMP, 6-8 V.
L1	GA-2165	DUAL INDUCTOR 36mh, 15Ω
L2		10 mh, 10Ω
S1	PG-2679	CHANGEOVER SWITCH
S2	PA-2092	ROTARY SWITCH
P1	-2122	FEMALE PANEL CONNECTOR-10 CONTACT

ALTERNATIVE PARTS C2, C4, & R1 FOR HIGH FREQUENCY WARPING ARE SUPPLIED SEPARATELY WITH CABINET ASSEMBLY.

*IN CABINET ASSEMBLY AS SHIPPED.

REFERENCE DWGS.
AMD-1035 CABINET ASSEMBLY
WD-1102 WIRING DIAGRAM

SCALE ~

SCHEMATIC
NON-SYNC CABINET
X-L SOUND SYSTEM

INTERNATIONAL PROJECTOR CORPORATION
88 LA FRANCE AVENUE
BLOOMFIELD NEW JERSEY

DR. A.D. CHK. APP'D.

UNLESS OTHERWISE SPECIFIED
REMOVE ALL BURRS BREAK SHARP CORNERS
TOLERANCES OF ALL FRACT. DIM. TO BE ± 1/64
TOLERANCES OF ALL DECIMAL DIM. TO BE ± .005

PRODUCT CLASS F

WC-1101

"ALBAGERE" REG. U.S. PAT. OFF.

Issued by
Engineering Department
Printed in U. S. A.

ALTEC SERVICE CORPORATION
SIMPLEX

WD-1102

ISSUE 1 2-1-50

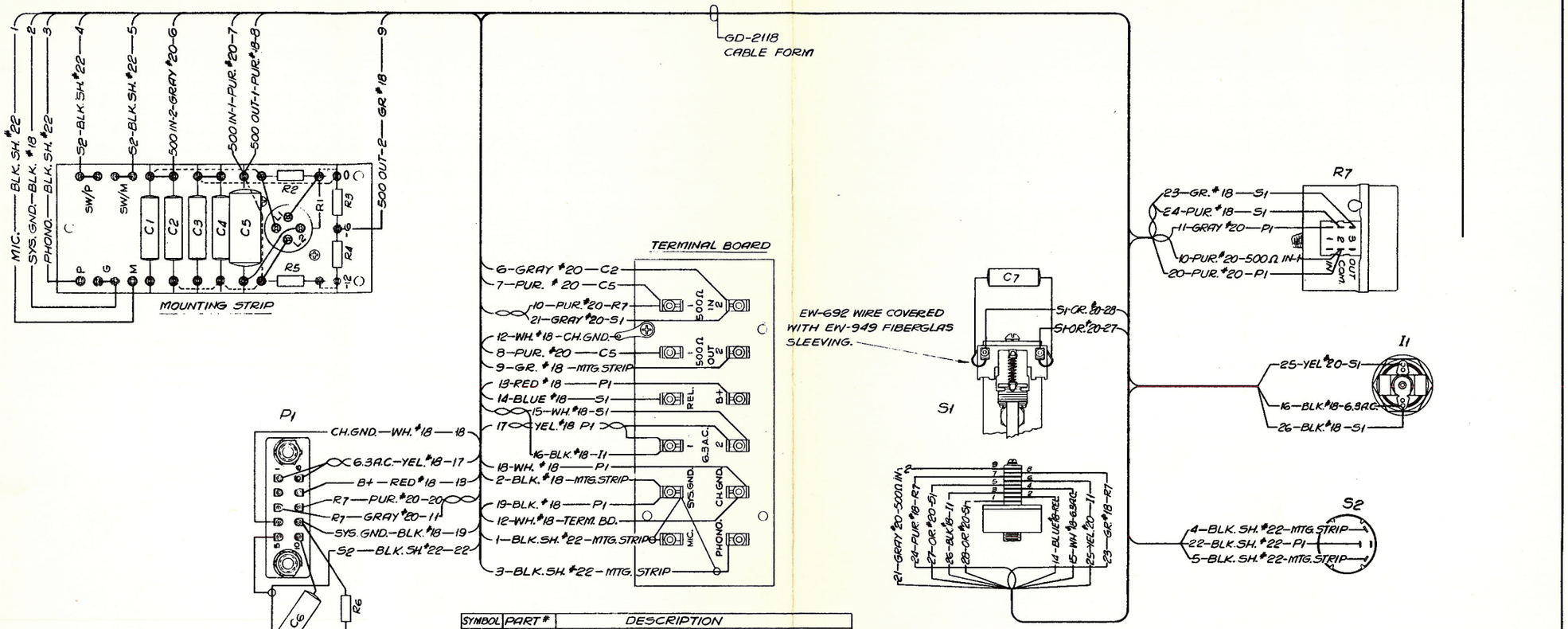

SYMBOL	PART #	DESCRIPTION
R1	PA-2075	RESISTOR, 470Ω, 1W., CARBON
R1	-2876	" , 120Ω, 1W., "
R2	-2042	" , 10K, 1W., "
R3	-2875	" , 270Ω, 1W., "
R4	-2876	" , 120Ω, 1W., "
R5	-2876	" , 120Ω, 1W., "
R6	-2048	" , 1M, 1W., "
R7	-2276	"TEE" ATTENUATOR, 500Ω
C1	-2872	CAPACITOR, .03 mfd., 400V., TUBULAR, PAPER
* C2	-2872	" , .03 mfd., 400V., " "
C2	-2099	" , 0.1 mfd., 400V., " "
C3	2872	" , .03 mfd., 400V., " "
* C4	-2872	" , .03 mfd., 400V., " "
C4	-2099	" , 0.1 mfd., 400V., " "
C5	-2873	" , .15 mfd., 400V., " "
C6	-2058	" , .01 mfd., 600V., " "
C7	-2099	" , 0.1 mfd., 400V., " "
I1	-2425	INDICATOR LAMP, 6-8 V.
L1	GA-2165	DUAL INDUCTOR 36 mh, 15Ω
L2		10 mh, 10Ω
S1	PG-2679	CHANGEOVER SWITCH
S2	PA-2092	ROTARY SWITCH
P1	-2122	FEMALE PANEL CONNECTOR—10 CONTACT.

LEGEND: K=× 1000Ω
M=× 1,000,000Ω

NOTES—

WIRES ON RESISTOR & CAPACITOR MOUNTING STRIP ARE INCLUDED ON DWG. GB-1916.

COVER LEADS OF RESISTORS & CAPACITORS WITH EW-949 FIBERGLAS SLEEVING WHERE NECESSARY.

ALTERNATIVE PARTS R1, C2 & C4 FOR HIGH FREQUENCY WARPING ARE SUPPLIED SEPARATELY WITH CABINET ASSEMBLY.

* IN CABINET ASSEMBLY AS SHIPPED.

REFERENCE DWGS. AMD-1035 CABINET ASSEMBLY
WC-1101 SCHEMATIC

SCALE ~
DRAWN 1-23-50
WIRING DIAGRAM
NON-SYNC CABINET
INTERNATIONAL PROJECTOR CORPORATION
95 LA FRANCE AVENUE
BLOOMFIELD NEW JERSEY
DR. A.D. CK'D. APP'D.
PRODUCT CLASS F
WD-1102

UNLESS OTHERWISE SPECIFIED
REMOVE ALL BURRS BREAK SHARP CORNERS
TOLERANCES OF ALL FRACT. DIM. TO BE ± 1/64
TOLERANCES OF ALL DECIMAL DIM. TO BE ± .005

Issued by
Engineering Department
Printed in U.S.A.

WC-1103

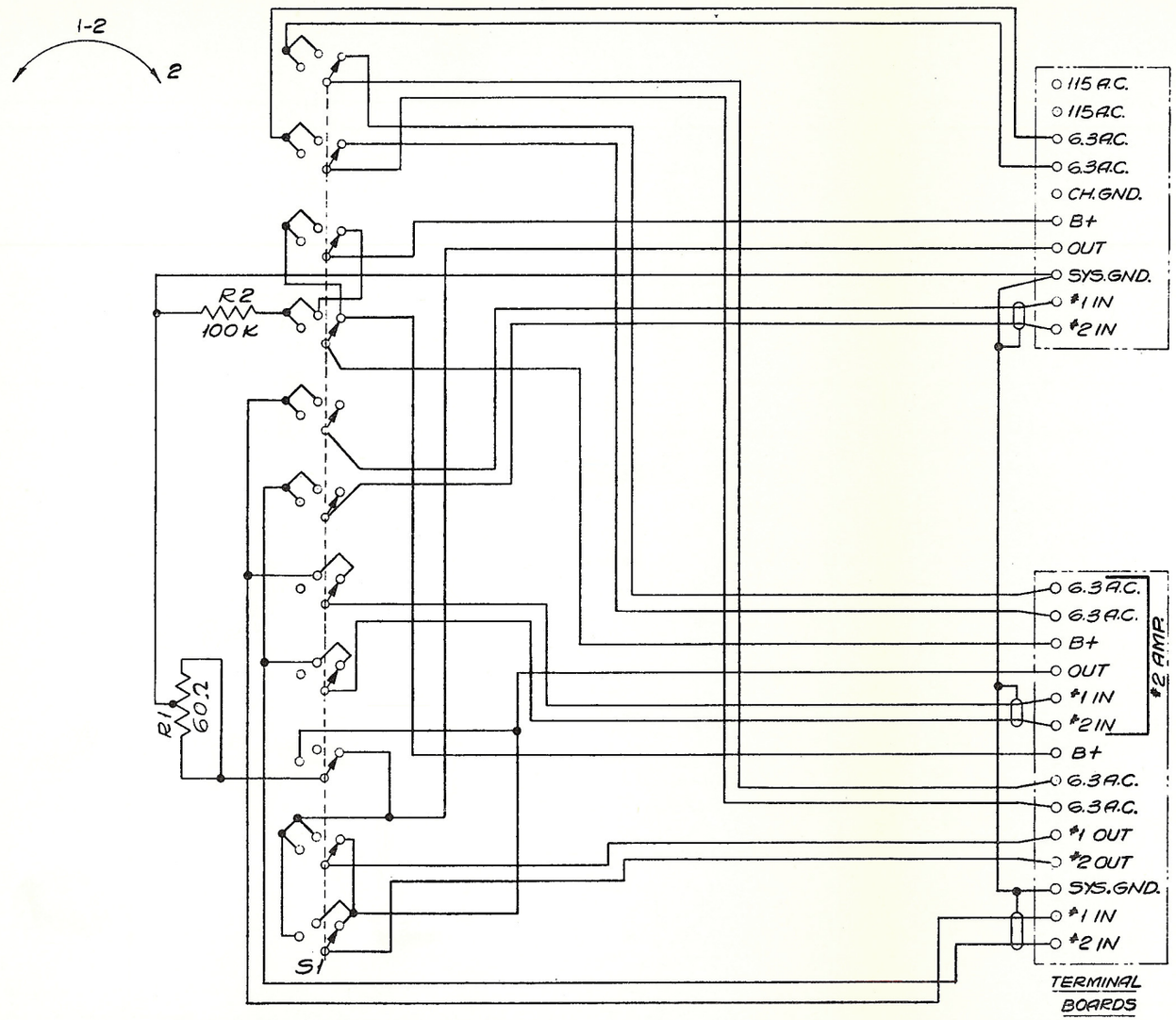

SYMBOL	I.P.C. PT. Nº	DESCRIPTION
R1	PA-2180	RESISTOR, 60 Ω, 25W., WIREWOUND
R2	-2076	" ,100 K, 2W., CARBON
S1	-2179	ROTARY SWITCH, 12 POLE, 3 POS.

REFERENCE DWG. GC-2174 TERMINAL BOARD & SELECTOR SWITCH ASS'Y.

DRAWN 2-2-50
ISSUE 1 2-14-50
R1 WAS 48 Ω
2 4-4-50 WMS

SCALE ~

SCHEMATIC
TERMINAL BOARD & SELECTOR SWITCH ASS'Y

INTERNATIONAL PROJECTOR CORPORATION
55 LA FRANCE AVENUE
BLOOMFIELD NEW JERSEY

DR. A.D. CHK. APP'D.

PRODUCT CLASS F

WC-1103

UNLESS OTHERWISE SPECIFIED
REMOVE ALL BURRS BREAK SHARP CORNERS
TOLERANCES OF ALL FRACT. DIM. TO BE ± 1/64
TOLERANCES OF ALL DECIMAL DIM. TO BE ± .005

"ALBANENE" Reg. 1951 P.R.T.CO., N.Y. U.S.A.

Issued by
Engineering Department
Printed in U. S. A.

ALTEC SERVICE CORPORATION
SIMPLEX

GC-2174

FROM	TO	COLOR	
1 OR 2	28	YEL.	TWIST
	31	YEL.	
3	37	RED	
4	23	GREEN	
5	39	PUR.	SH. TWIST
6	41	GRAY	
7	36	RED	
8 OR 9	32	YEL.	TWIST
	29	YEL.	
10	26	BLUE	
11	22	GREEN	
12	19	BLACK	
13	38	PUR	SH. TWIST
14	40	GRAY	
15 OR 16	27	YEL.	TWIST
	30	YEL.	
17	33	RED	
18	25	BLUE	
19	42	BLACK	
20	35	PUR.	SH. TWIST
21	34	GRAY	
24	43	WHITE	
SHIELD	42	BLACK	

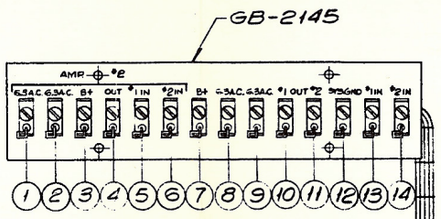

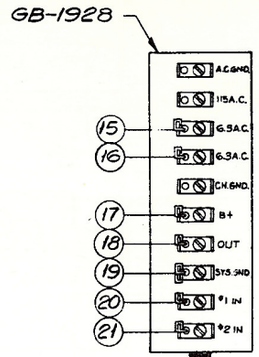

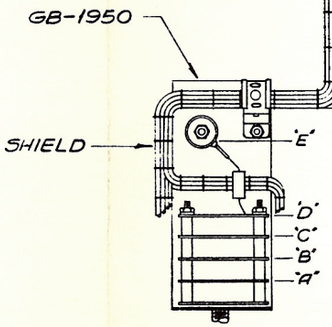

THREAD WIRES THRU EYELETS & SLOTS, WRAP 1/2 TURN AROUND POST & SOLDER.

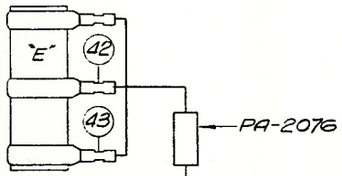

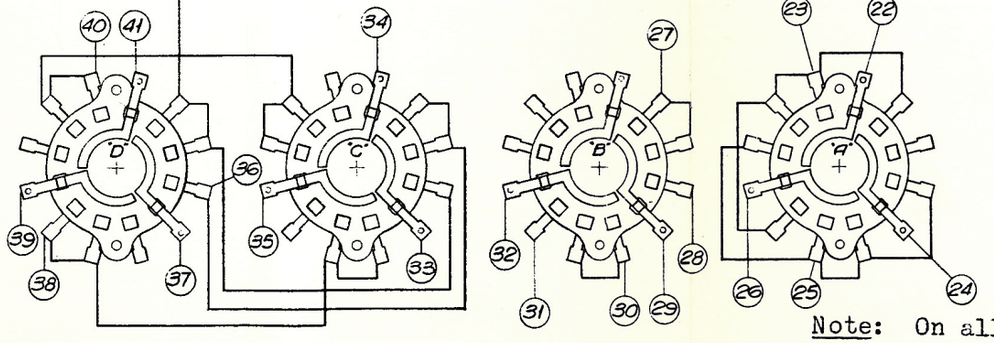

STRAP REQUIREMENTS

EW-692 #20 SOLID, TINNED COPPER WIRE

EW-949 #20 FIBERGLAS SLEEVING

Note: On all "Pur-Gray" SH Twist Pairs:
Change "Pur" to "BLK or Pur"
Change "Gray" to "RD or Gray"

REFERENCE DWG.-WC-1103 SCHEMATIC

DRAWN 1-27-50
ISSUE 1 2-14-50
"A.C.GND." ON GB-1928 WAS "115 A.C."
A.D.
ISSUE 2 3-22-50

SCALE ~

TERMINAL BOARD & SELECTOR SWITCH ASS'Y-SINGLE PLACE CAB.

INTERNATIONAL PROJECTOR CORPORATION
88 LA FRANCE AVENUE
BLOOMFIELD NEW JERSEY

DR. A.D. CH'K. APP'D.

UNLESS OTHERWISE SPECIFIED
REMOVE ALL BURRS BREAK SHARP CORNERS
TOLERANCES OF ALL FRACT. DIM. TO BE ± 1/64
TOLERANCES OF ALL DECIMAL DIM. TO BE ± .005

PRODUCT CLASS F

GC-2174

Issued by
Engineering Department
Printed in U.S.A.

WC-1104

SYMBOL	I.P.C. PT. Nº	DESCRIPTION
R1, R2	PA-2180	RESISTOR, 60Ω, 25W., WIREWOUND
R3, R4, R5	-2076	" ,100K, 2W., CARBON
S1, S2	-2179	ROTARY SWITCH, 12 POLE, 3 POS.

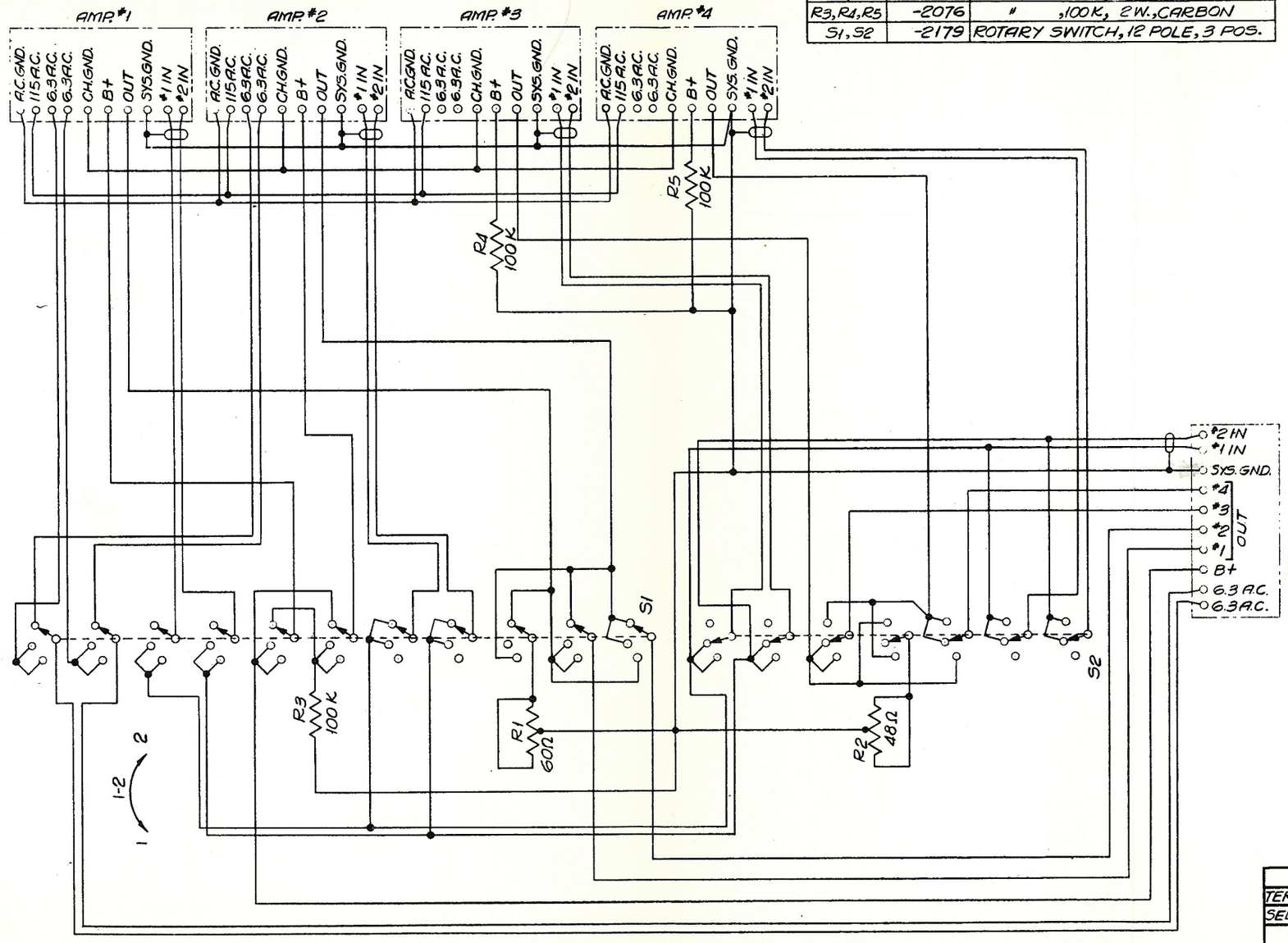

REFERENCE DWG. GD-2175 — TERMINAL BOARD & SELECTOR SWITCHES ASSY.

DRAWN 2-3-50
ISSUE 1 3-8-50
R1 WAS 48Ω
2 4-4-50 mw.

SCALE ~

SCHEMATIC
TERMINAL BOARDS &
SELECTOR SWITCHES

INTERNATIONAL PROJECTOR CORPORATION
85 LA FRANCE AVENUE
BLOOMFIELD NEW JERSEY

DR. A.D. CH'K. APP'D.

PRODUCT CLASS F

WC-1104

UNLESS OTHERWISE SPECIFIED
REMOVE ALL BURRS BREAK SHARP CORNERS
TOLERANCES OF ALL FRACT. DIM. TO BE ± 1/64
TOLERANCES OF ALL DECIMAL DIM. TO BE ± .005

"ALDARBEE" Reg. U.S. Pat. Off.

Issued by
Engineering Department
Printed in U. S. A.

ALTEC SERVICE CORPORATION
SIMPLEX

GD-2175

ISSUE 1 5-8-50

FROM	TO	COLOR	
1 OR 2	69	YEL.	TWIST
	72	YEL.	
3	58	RED	
4	75	ORANGE	
5	77	GRAY	
6	54	BLUE	
7	51	GREEN	
8	79	BLACK	
8	57	BLACK	
8	13	BLACK	
9	46	PUR.	SH. TWIST
10	49	GRAY	
9	60	PUR.	SH. TWIST
10	65	GRAY	
11	48	GRAY	SH. TWIST
12	50	PUR.	

FROM	TO	COLOR	
13	20	BLACK	
13	27	BLACK	
13	37	BLACK	
14	55	GREEN	
15	22	WHITE	
22	30	WHITE	
30	40	WHITE	
16	23	GR.	TWIST
17	24	PUR.	
23	33	GR.	TWIST
24	34	PUR.	
33	43	GR.	TWIST
34	44	PUR.	
18	45	GRAY	SH. TWIST
19	47	PUR.	
21	53	BLUE	

FROM	TO	COLOR	
25	66	GRAY	SH. TWIST
26	64	PUR.	
28	76	GRAY	
29	59	RED	
31 OR 32	68	YEL.	TWIST
	71	YEL.	
35	62	GRAY	SH. TWIST
36	61	PUR.	
38	74	ORANGE	
39	63	RED	
41 OR 42	67	YEL.	TWIST
	70	YEL.	
52	56	WHITE	
73	78	WHITE	
SHIELD	57	BLACK	
SHIELD	79	BLACK	

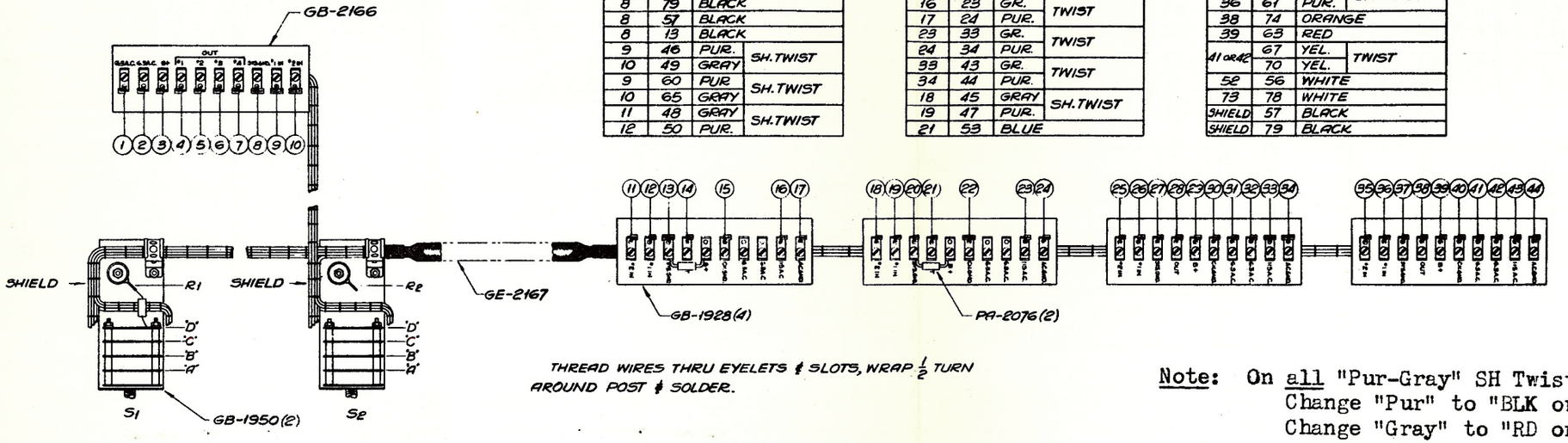

THREAD WIRES THRU EYELETS & SLOTS, WRAP ½ TURN AROUND POST & SOLDER.

Note: On all "Pur-Gray" SH Twist Pairs:
Change "Pur" to "BLK or Pur"
Change "Gray" to "RD or Gray"

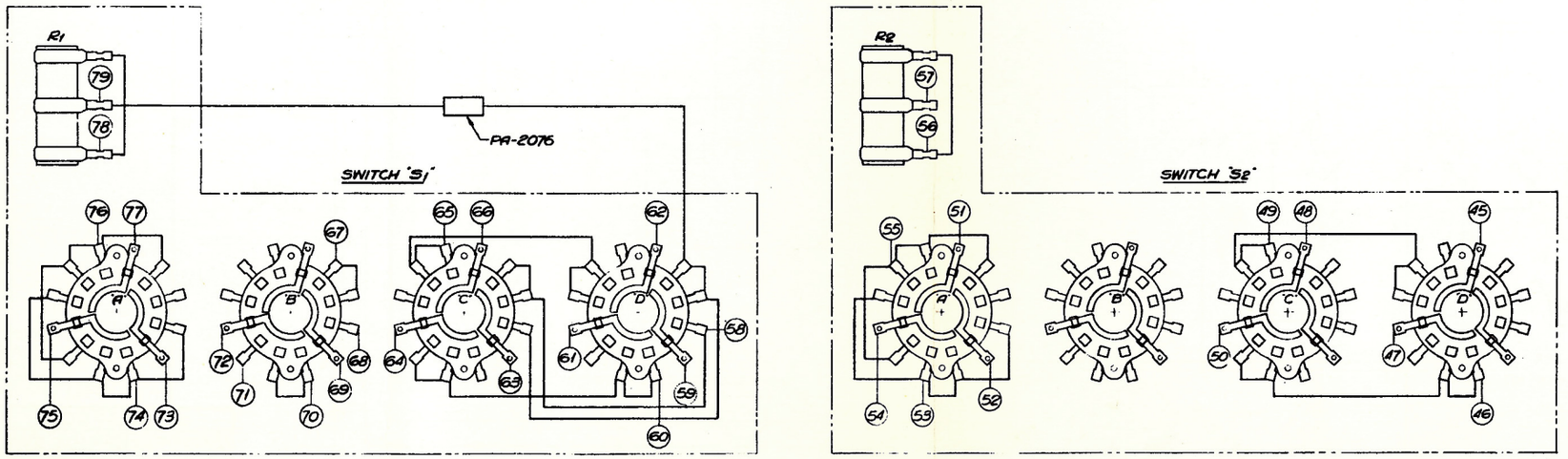

SCALE 1:2

STRAP REQUIREMENTS
EW-692 #20 SOLID, TINNED COPPER WIRE
EW-949 #20 FIBERGLAS SLEEVING

REFERENCE DWG.—WC-1104 SCHEMATIC

TERMINAL BOARD & SELECTOR SWITCH ASSY (CABINET KIT AM-1099)
INTERNATIONAL PROJECTOR CORPORATION
96 LA FRANCE AVENUE
BLOOMFIELD NEW JERSEY
DR. A.D. CHK. APP'D.

PRODUCT CLASS F GD-2175

UNLESS OTHERWISE SPECIFIED
REMOVE ALL BURRS BREAK SHARP EDGES
TOLERANCES OF ALL FRACT. DIM. TO BE ± 1/64
TOLERANCES OF ALL DECIMAL DIM. TO BE ± .005

Issued by
Engineering Department
Printed in U.S.A.

SYS. GAIN ADJ.	C-7, 9, 11, 13, 15 AND 17	C-8, 10, 12, 14, 16 AND 18	STRAP PER FIG.	RELATIVE RESPONSE - 1000 CYCLES 0db REFERENCE CYCLES PER SECOND 2000	3000	4000	5000	6000	7000	8000
	OPEN	OPEN	1(a)	0	0	0	.2	.25	.5	.7
	OPEN	0.1	2	-.3	.7	-1.2	-1.6	-2.3	-2.7	-3.0
	OPEN	0.15	2	-.4	-1.2	-2.1	-2.7	-3.4	-4.1	-4.5
	0.1	0.1	3	-.9	-2.0	-3.4	-4.3	-5.3	-6.0	-6.5
	0.15	0.15	3	-1.6	-3.3	-4.0	-5.0	-6.0	-7.6	-8.0
-4	0.1	OPEN	4	-.3	.6	1.0	1.5	1.7	2.3	2.5
-8	0.15	0.1	5	.8	1.2	1.4	1.4	1.3	1.3	1.3
-8	0.1	OPEN	4	.8	1.8	2.6	3.5	3.9	4.5	5.0
-8	0.1	0.1	6	+.20	3.1	3.7	4.3	4.6	4.9	6.2
-12	0.1	0.15	5	1.0	1.5	1.6	1.7	1.8	1.6	1.5
-12	0.1	0.1	5	1.5	2.4	2.8	3.2	3.3	3.4	3.4
-12	0.1	OPEN	4	2.2	4.0	5.1	6.2	6.8	7.2	7.6

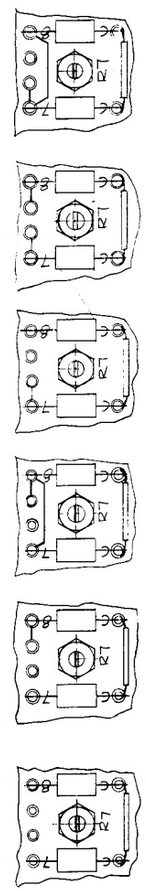

NOTES - (a) RESPONSE AS SHIPPED
(b) SIGNAL SOURCE - OSCILLATOR WITH 500 OHMS IN SERIES USED IN OBTAINING ALL DATA.
(c) CAPACITORS SUPPLIED IN KIT G-2534 SHIPPED WITH AM-1089
(d) TYPICAL STRAPPING - ONLY CHANNEL #1; PROJECTOR #1 SHOWN.
(e) BALANCE POTENTIOMETERS R-7 THRU R-18 FULL GAIN IN CLOCKWISE POSITION. ROTATE COUNTER CLOCKWISE FOR DESIRED ATTENUATION (16 db RANGE).

DRAWN 6-23-55
ISSUE :-1 6-27-55
SCALE
AM-1089 STEREO
BALANCE & WARPING
ADJUSTMENTS
INTERNATIONAL PROJECTOR CORPORATION
85 LA FRANCE AVENUE
BLOOMFIELD NEW JERSEY
DR. CHK. APPD.
IN-130
PRODUCT CLASS
UNLESS OTHERWISE SPECIFIED REMOVE ALL BURRS. BREAK SHARP CORNERS TOLERANCES OF ALL DECIMAL DIM. TO BE ± .005

IN-130

Printed in U.S.A.

FIGURE 3
AM-1089 SYSTEM CONTROL CABINET
STEREO HIGH FREQUENCY ADJUSTMENTS

IN-131

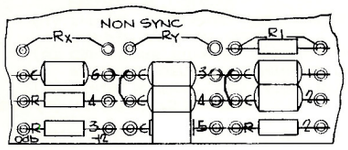

FIGURE = 1
SHOWN AS SHIPPED

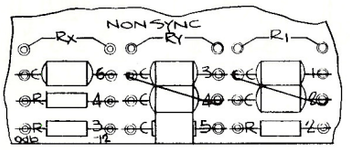

FIGURE = 2
SERIES STRAPPING-R1 OPEN

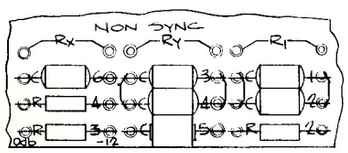

FIGURE = 3
PARALLEL STRAPPING - R1 OPEN

NOTE
FOR 12 db INCREASE IN LEVEL
MOVE GREEN-WHITE WIRE
FROM RIGHT TERMINAL OF
R3 TO THE LEFT TERMINAL.

SYS. GAIN ADJ.	AM-1089 SYSTEM CONTROL CABINET ADJUSTMENTS C-1 Mfd	C-2 Mfd	C-3 Mfd	C-4 Mfd	C-5 Mfd	R-1 OHMS
0	0.03	0.03	0.03	0.03		
-12	C-1 & C-2 IN SERIES		C-3 & C-4 IN SERIES		.1	120
0	0.03	0.03	0.03	0.03		
-12	C-1 & C-2 IN SERIES		C-3 & C-4 IN SERIES		.03	120
0						
-12	0.03	OPEN	0.03	OPEN	----	OPEN
0	0.03	0.03	0.03	0.03		
-12	C-1 & C-2 IN SERIES		C-3 & C-4 IN SERIES		.15	120
0						
-12	0.03	OPEN	0.03	OPEN	.03	120 (a)
0	0.03	0.03	0.03	0.03		
-12	C-1 & C-2 IN SERIES		C-3 & C-4 IN SERIES		.15	470
0	0.03	0.03	0.03	0.03		
-12	C-1 & C-2 IN SERIES		C-3 & C-4 IN SERIES		—	OPEN
0	0.03	0.03	0.03	0.03		
-12	C-1 & C-2 IN PARALLEL		C-3 & C-4		—	OPEN

RELATIVE RESPONCE - 1000 CYCLE REFERENCE - ODB CYCLES PER SECOND (C)	2000	2500	3000	3500	4000	5000	6000	7000	8000
	0	+.1	+.1	0	-.3	-2.2	-6.1	-10.4	-15.3
	+.2	+.4	+.6	+1.1	+1.6	+1.0	-3.1	-8.7	-14.8
	-.2	-.6	-.0	-1.3	-2.2	-4.0	-6.3	-9.0	-12.6
	-.2	.4	-.7	-1.0	-1.5	-2.6	-3.0	-5.6	-8.8
	-1.7	-2.5	-3.6	-4.8	-6.4	-9.3	-13.5	-16.2	-19.0
	-1.6	-2.3	-3.0	-3.8	-4.0	-7.4	-10.8	-14.3	-17.8
	+.4	+1.1	+1.6	+1.0	+1.3	-2.7	-7.6	-12.6	-17.4
	+.6	+1.5	+2.7	+3.8	+4.2	-.1	-6.1	-12.0	-16.5
	0	-.2	-.6	-1.0	-1.8	-3.8	-6.2	-9.1	-12.8
	+.2	+.1	-.1	-.3	-.8	-2.0	-3.5	-5.7	-9.2
	-1.4	-2.0	-2.5	-2.5	-2.8	-7.2	-11.3	-14.8	-18.8
	-1.5	-1.6	-1.5	-1.6	-1.1	-5.6	-10.4	-14.5	-18.0
	-1.4	-2.3	-3.1	-4.2	-5.5	-8.5	-11.6	-14.9	-18.4
	-1.2	-1.6	-2.2	-3.0	-4.3	-6.5	-8.5	-12.6	-16.3
	+1.1	+.8	-.9	-3.0	-4.3	-9.5	-13.2	-16.6	-20.3
	0	-.2	-.9	-1.6	-3.2	-7.0	-11.1	-15.1	-19.3

NOTES
(a) RESPONSE AS SHIPPED
(b) THE SMPE MOTION PICTURE RESEARCH COUNCIL TEST FILM ASFA-2 WAS USED IN OBTAINING ALL DATA. (6FT. RG-59/U CABLE)
(c) CAPACITORS & RESISTORS SUPPLIED IN KIT G-2534 SHIPPED WITH AM-1089

UNLESS OTHERWISE SPECIFIED
REMOVE ALL BURRS BREAK SHARP CORNERS
TOLERANCES OF ALL FRACT. DIM. TO BE ± 1/64
TOLERANCES OF ALL DECIMAL DIM. TO BE ± .005
PRODUCT CLASS

DRAWN 6-22-55
ISSUE - 1 6-27-55
SCALE C-5

AM-1089 REGULAR
BALANCE & WARPING
ADJUSTMENTS

INTERNATIONAL PROJECTOR CORPORATION
55 LA FRANCE AVENUE
BLOOMFIELD NEW JERSEY
DR. MC CH'K RR APP'D RM

IN-131

FIGURE 4
AM-1089 SYSTEM CONTROL CABINET
OPTICAL HIGH FREQUENCY ADJUSTMENTS

Printed in U.S.A.

ALTEC SERVICE CORPORATION
SIMPLEX

AM-1089 CONTROL CABINET

W-1215

NOTES
1. R1, C1 THRU C4 AND C7 THRU C18 ARE AS SHIPPED. ALTERNATE PARTS ARE SUPPLIED SEPARATELY WITH ASSEMBLY.
2. Rx AND Ry TO BE ADDED AS REQUIRED FOR MATCHING NON-SYNC INPUT.
3. STRAP IN MATCHING TRANSFORMER "T1" IF REQUIRED TO MATCH HIGH IMPEDANCE INPUT TO POWER AMPLIFIER.
4. ALL RELAY CONTACTS SHOWN IN NON-ENERGIZED CONDITION.

STEREO BALANCE POTENTIOMETERS R7 THRU R12 PROVIDE A 16 DB ATTENUATION RANGE — FULL GAIN IN MAXIMUM CLOCKWISE POSITION.

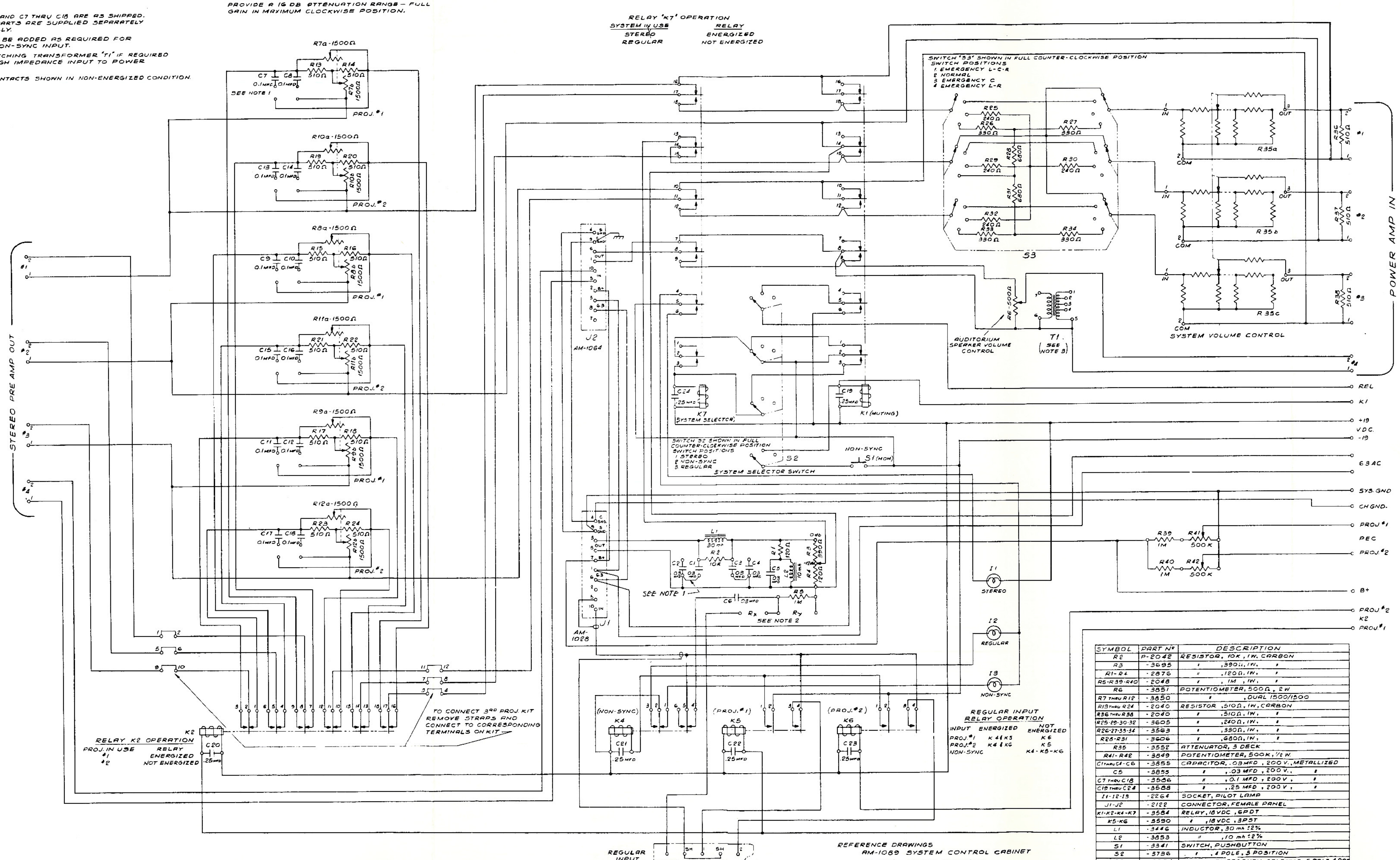

SYMBOL	PART Nº	DESCRIPTION
R2	P-2042	RESISTOR, 10K, 1W. CARBON
R3	-3695	" ,390Ω, 1W, "
R1-R4	-2876	" ,120Ω, 1W, "
R5-R39-R40	-2048	" , 1M , 1W, "
R6	-3851	POTENTIOMETER, 500Ω, 2W
R7 THRU R12	-3850	" ,DUAL 1500/1500
R13 THRU R24	-2040	RESISTOR ,510Ω, 1W, CARBON
R36 THRU R38	-2040	" ,510Ω, 1W, "
R25-29-30-32	-3605	" ,240Ω, 1W, "
R26-27-33-34	-3563	" ,330Ω, 1W, "
R28-R31	-3606	" ,680Ω, 1W, "
R35	-3552	ATTENUATOR, 3 DECK
R41-R42	-3849	POTENTIOMETER, 500K, 1/2 W.
C1 THRU C4-C6	-3855	CAPACITOR, .03 MFD, 200 V., METALLIZED
C5	-3855	" , .03 MFD, 200 V., "
C7 THRU C18	-3586	" , 0.1 MFD, 200 V, "
C19 THRU C24	-3588	" , .25 MFD, 200 V, "
I1-I2-I3	-2264	SOCKET, PILOT LAMP
J1-J2	-2122	CONNECTOR, FEMALE PANEL
K1-K2-K4-K7	-3584	RELAY, 18 VDC, 6PDT
K5-K6	-3590	" , 18 VDC, 3PST
L1	-3446	INDUCTOR, 30 mh ±2%
L2	-3853	" , 10 mh ±2%
S1	-3341	SWITCH, PUSHBUTTON
S2	-3736	" , 4 POLE, 3 POSITION
S3	-3854	" , EMERGENCY SELECTOR, 6 POLE, 4 POS
T1	-3450	TRANSFORMER, MATCHING

DRAWN:	5-11-55
ISSUE: 1	5-17-55
STRAPS ON C2 & C1, C3 & C4 WERE LOCATED ON OPPOSITE SIDE OF CAPACITORS. C5 WAS .15 MFD. 200 V. ADDED RESISTOR TO "R1". REG. INPUT RELAY OPERATION WAS K5 & K4-K2	
ISSUE: 2	6-29-55

SCHEMATIC

AM-1089

INTERNATIONAL PROJECTOR CORPORATION
55 LA FRANCE AVE
BLOOMFIELD, NEW JERSEY

DR AD CH'K [signature] APP'D [signature]

F W-1215

Printed in U.S.A.

ALTEC SERVICE CORPORATION
SIMPLEX

W-1214

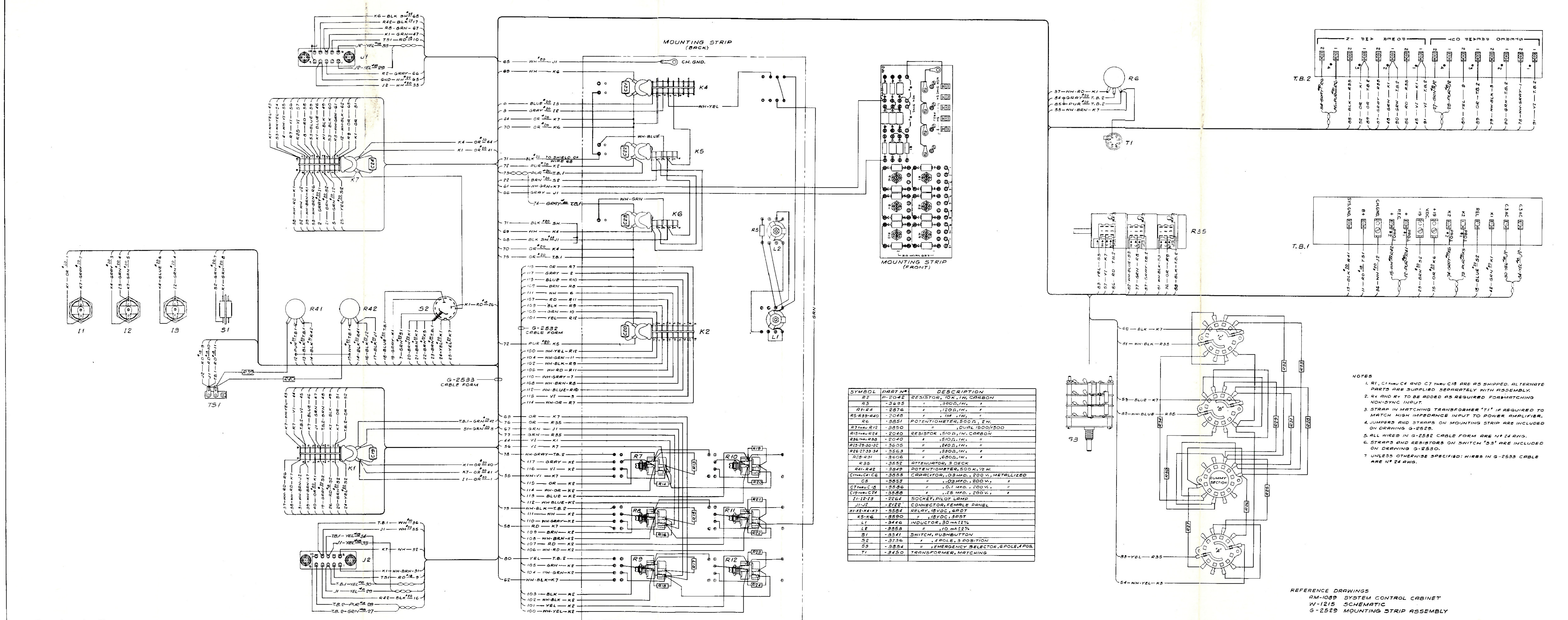

SYMBOL	PART Nº	DESCRIPTION
R2	P-2042	RESISTOR, 10K, 1W, CARBON
R3	-3695	" ,390Ω, 1W, "
R1-R4	-2876	" ,120Ω, 1W, "
R5-R39-R40	-2048	" , 1M , 1W, "
R6	-3851	POTENTIOMETER, 500Ω, 2W.
R7 THRU R12	-3850	" ,DUAL 1500/1500
R13 THRU R24	-2040	RESISTOR ,510Ω, 1W, CARBON
R36 THRU R38	-2040	" ,510Ω, 1W, "
R25-29-30-32	-3605	" ,240Ω, 1W, "
R26-27-33-34	-3563	" ,330Ω, 1W, "
R28-R31	-3606	" ,680Ω, 1W, "
R35	-3652	ATTENUATOR, 3 DECK
R41-R42	-3849	POTENTIOMETER, 500K, 1/2 W.
C1 THRU C4-C6	-3855	CAPACITOR, .03 MFD., 200 V., METALLIZED
C5	-3855	" , .03 MFD., 200 V., "
C7 THRU C18	-3586	" , 0.1 MFD., 200 V., "
C19 THRU C24	-3588	" , .25 MFD., 200 V., "
I1-I2-I3	-2264	SOCKET, PILOT LAMP
J1-J2	-2122	CONNECTOR, FEMALE PANEL
K1-K2-K4-K7	-3584	RELAY, 18VDC, 6PDT
K5-K6	-3590	" , 18VDC, 3PST
L1	-3446	INDUCTOR, 30 mh ±2%
L2	-3853	" , 10 mh ±2%
S1	-3341	SWITCH, PUSHBUTTON
S2	-3736	" , 4 POLE, 3 POSITION
S3	-3854	" , EMERGENCY SELECTOR, 6 POLE, 4 POS.
T1	-3450	TRANSFORMER, MATCHING
	-	

NOTES

1. R1, C1 THRU C4 AND C7 THRU C18 ARE AS SHIPPED. ALTERNATE PARTS ARE SUPPLIED SEPARATELY WITH ASSEMBLY.
2. Rx AND Ry TO BE ADDED AS REQUIRED FOR MATCHING NON-SYNC INPUT.
3. STRAP IN MATCHING TRANSFORMER "T1" IF REQUIRED TO MATCH HIGH IMPEDANCE INPUT TO POWER AMPLIFIER.
4. JUMPERS AND STRAPS ON MOUNTING STRIP ARE INCLUDED ON DRAWING G-2529.
5. ALL WIRES IN G-2532 CABLE FORM ARE Nº 24 AWG.
6. STRAPS AND RESISTORS ON SWITCH "S3" ARE INCLUDED ON DRAWING G-2530.
7. UNLESS OTHERWISE SPECIFIED: WIRES IN G-2533 CABLE ARE Nº 24 AWG.

REFERENCE DRAWINGS
AM-1089 SYSTEM CONTROL CABINET
W-1215 SCHEMATIC
G-2529 MOUNTING STRIP ASSEMBLY

DRAWN: 5-24-55
ISSUE: 1 6-9-55
IN FRONT VIEW OF MOUNTING STRIP SHOW (R1) P-2876 RESISTOR.
IN TABLE ADDED R1 TO PART P-2876.
C5 WAS P-3587 .15 MFD. 200 V.
ISSUE: 2 7-1-55

WIRING DIAGRAM
AM-1089
INTERNATIONAL PROJECTOR CORPORATION
55 LA FRANCE AVE
BLOOMFIELD NEW JERSEY
DR AD CHK APP'D
F
W-1214

ALTEC SERVICE CORPORATION
SIMPLEX

AM-1089 CONTROL CABINET

I-2311

DRAWN 8-14-55
ISSUE:-1

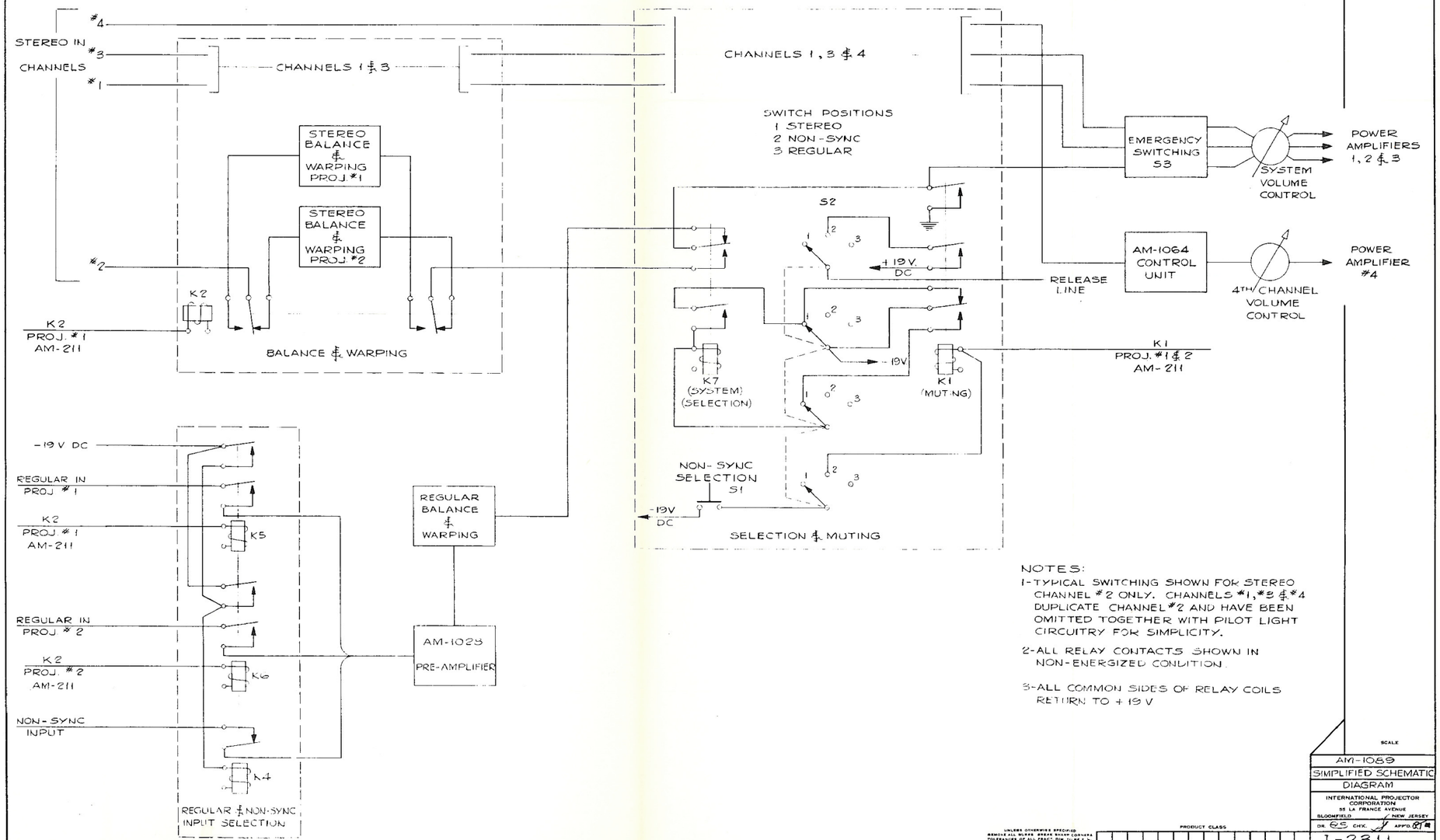

NOTES:

1-TYPICAL SWITCHING SHOWN FOR STEREO CHANNEL #2 ONLY. CHANNELS #1, #3 & #4 DUPLICATE CHANNEL #2 AND HAVE BEEN OMITTED TOGETHER WITH PILOT LIGHT CIRCUITRY FOR SIMPLICITY.

2-ALL RELAY CONTACTS SHOWN IN NON-ENERGIZED CONDITION.

3-ALL COMMON SIDES OF RELAY COILS RETURN TO +19 V

UNLESS OTHERWISE SPECIFIED
REMOVE ALL BURRS. BREAK SHARP CORNERS
TOLERANCES OF ALL FRACT. DIM. TO BE ±
TOLERANCES OF ALL DECIMAL DIM. TO BE ± .005

PRODUCT CLASS

SCALE

AM-1089
SIMPLIFIED SCHEMATIC DIAGRAM

INTERNATIONAL PROJECTOR CORPORATION
35 LA FRANCE AVENUE
BLOOMFIELD NEW JERSEY

DR. ES CHK. APPD.

I-2311

1. DESCRIPTION

The LU-3001 is contained in a wall mounting, sheet metal cabinet 13" high x 20" wide x 12" deep, finished in aluminum gray. The total weight is approximately 30 lbs. The door, which is hinged at the bottom and includes the panel on which the components are mounted, opens downward to a horizontal position so that all parts are accessible without removal from the cabinet.

On the panel are mounted twenty 2-position transfer jack switches, a monitor volume control and an "Amplifier" D.P.D.T. toggle switch. A terminal strip, for external connections is mounted on the back of the cabinet. Each jack switch controls the sound to one ramp in a Drive-In Theatre having IN-A-CAR speakers. An artificial resistance load is inserted when the jack switches are turned "OFF". The "Amplifier" switch selects either of two power amplifiers, when dual amplifier equipment is employed, and two resistors are provided for termination of the unused amplifier equipment.

2. INSTALLATION

The unit should be mounted on one of the Projection Room walls in a convenient, accessible location with reference to the system conduit layout. Likewise, it should be so located that the wiring from the Drive-In area may enter the bottom of the cabinet. All external connections to the terminal strips should be made per the system wiring diagram.

A. Strapping of Terminals INP 1 and INP 2.

Strap these two terminals, when single amplifier equipment is employed to prevent accidental operation of the "Amplifier" switch causing sound failure.

B. Disconnection of Load Resistors R-23 and R-24.

When single amplifier equipment is employed, disconnect the WH-YEL or BLK #16 wire from these resistors and tape, otherwise R-23 and R-24 will be in parallel with the speaker load.

C. Adjustment of Load Resistors (R-1 to R-20 Incl.)

The artificial resistance load, which is inserted when the jack switches are turned off, should be adjusted for each circuit so that the impedance remains constant. With each switch in "ON" position an ohmmeter should be connected successively across each resistance and this resistance adjusted per the following tabulation.

Issued by
Engineering Department
Printed in U.S.A.

October 14, 1949
Issue #2

Speakers Per Circuit	Load Resistor Setting - Ohms
20	100
30	100
40	75
50	60
60	50
70	43
80	38
90	33
100	30
110	27
120	25
130	23

3. OPERATION

A. Normal. Switches 1 to 20 may be set in "ON" position at all times or if desired may be turned on successively as cars park on the several ramps.

The "Amplifier" switch should be set in position "1" regardless of whether single or dual amplifier equipment is supplied.

The monitor volume control should be adjusted as required for adequate volume.

B. Emergency.

1. Speaker Group Failure. A short circuit in the line from the Projection Room to any ramp will affect all of the speakers in the Drive-In area and likewise monitor reproduction. This particular line may be disconnected quickly by turning off the jack switches one at a time until normal sound is restored. The switch that restores sound should remain "OFF" until the trouble is cleared and the other switches turned "ON" as before.

2. Defective Amplifier. When dual amplifier equipment is installed and #1 amplifier becomes inoperative, set amplifier switch in position "2". The defective amplifier is disconnected and operation continues on the emergency amplifier.

4. ASSOCIATED DRAWING. WE-1023 LU-3001 Loudspeaker Control Cabinet - Schematic and Wiring Diagram.

ALTEC SERVICE CORPORATION

LU-3001 LOUDSPEAKER CONTROL CABINET

WE-1023

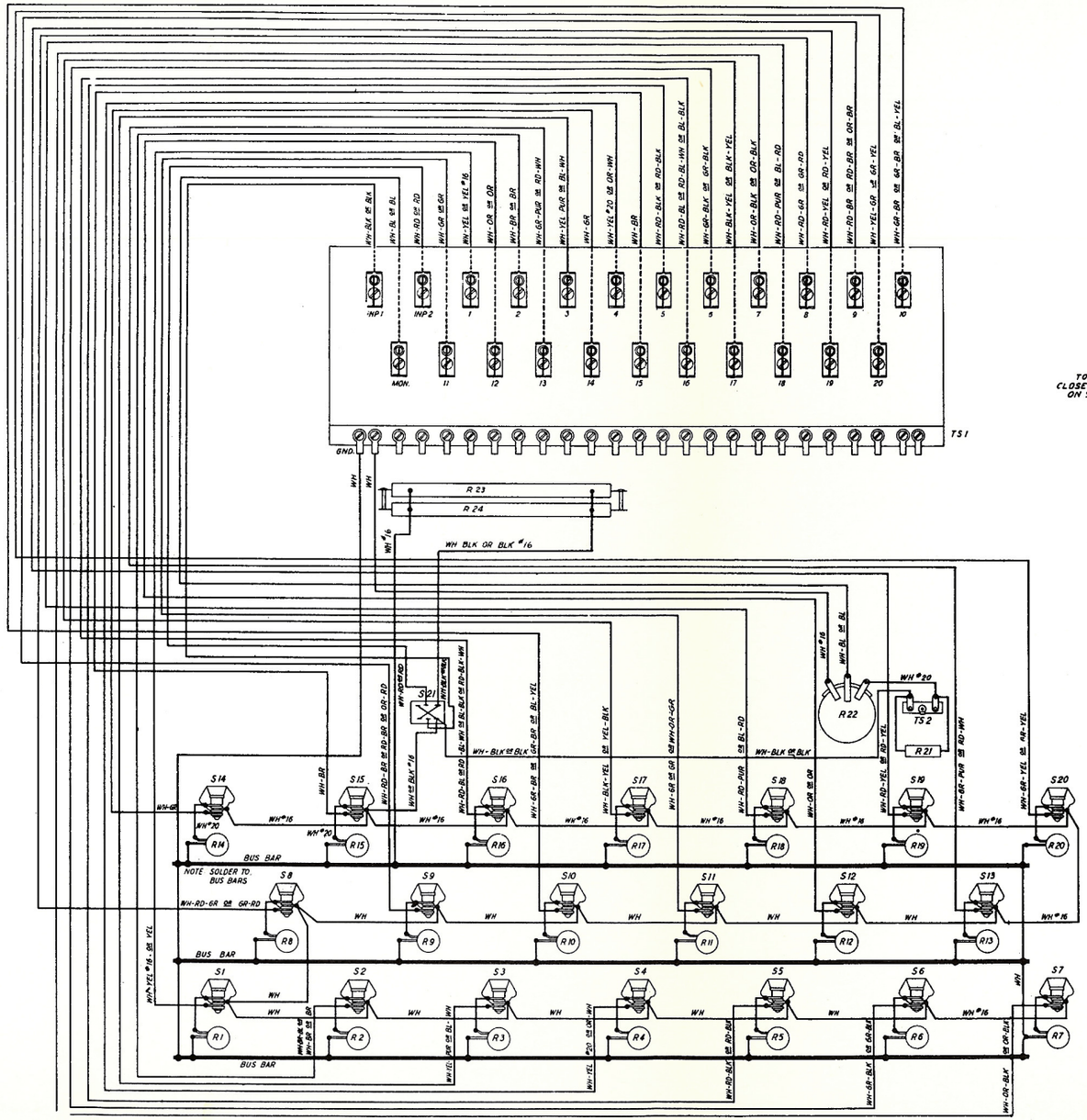

DESIG	PART NO.	APPARATUS
R1 THRU 5	PA-1298	RESISTOR, 100 OHMS, 50 WATTS
R6 THRU 20	PA-1297	RESISTOR, 50 OHMS, 50 WATTS
R21	PA-1269	RESISTOR, 50 OHMS, 5 WATTS
R22	PA-1261	RHEOSTAT, 25 WATTS
S1 THRU 20	PA-1268	SWITCH, STD JACK #30
S21	PA-8176	SWITCH, D.P.D.T., 20 AMP
TS1	6C-1027	TERMINAL STRIP
TS2	PA-1305	TERMINAL STRIP
R23	PA-1392	RESISTOR 5 OHMS 75 WATTS
R24	PA-1392	RESISTOR 5 OHMS. 75 WATTS.

REDRAWN FROM ISSUE 5 WITH EXTENSIVE CHANGES

ISSUE:6 5-21-48
ADDED R23 & R24 (PA-1392) PA-8264 WAS PA-1260 F. - CHANGED WIRING DIAGRAM & SCHEMATIC TO CONFORM ADDED (3 3/4") #18 BARE COPPER WIRE (TINNED) SPEC'S ONLY

ISSUE:7 7-15-48
CENTER TAPS OF S1 THRU 20 WERE CONNECTED TO TS1 OF 9 & 10 RESPECTIVELY

ISSUE:8 7-27-49
TERM. BOARD EYELETS WERE SCREWS REMOVED(UNABLES FROM TERM.BOARD WIRES WERE SHOWN COMING THRU THESE HOLES. WIRE FROM R-24 TO BUS BAR WAS SHOWN ONLY #18 ADDED WH. BR.BL TO WIRE FROM S-2 TO TERM 8. ADDED WH. OR.GR. TO WIRE FROM S-11 TO TERM 17

ISSUE: 9-7-49

(3 3/4") #18 BARE COPPER WIRE (TINNED)

WH #20

TO NORMALLY CLOSED CONTACTS ON SWITCHES

TYPICAL METHOD OF MOUNTING RESISTORS

NOTE: See Par. 1.2 E.B. "In-A-Car Speakers", File 4.22, for impedances of matching transformer and speaker voice coil in Simplex LU-3002 In-A-Car Speakers.

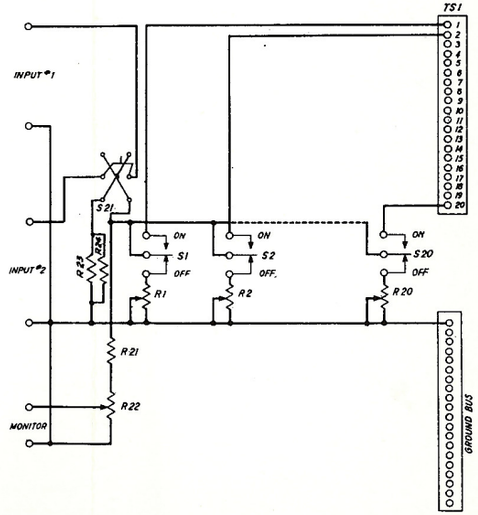

LU-3001 LOUDSPEAKER & CONTROL CABINET SCHEMATIC & WIRING DIAGRAM
INTERNATIONAL PROJECTOR CORPORATION
WE-1023

ALTEC SERVICE CORPORATION
SIMPLEX

NTS-69 Monitor Volume Control Cabinet

ISSUE: 1 6-28-50

NTS-69 MONITOR
VOLUME CONTROL CABINET
WIRING DIAGRAM
NATIONAL THEATRE SUPPLY
92 GOLD ST.
NEW YORK, 7 N.Y.
DR. CH'K. APP'D.
NS-122

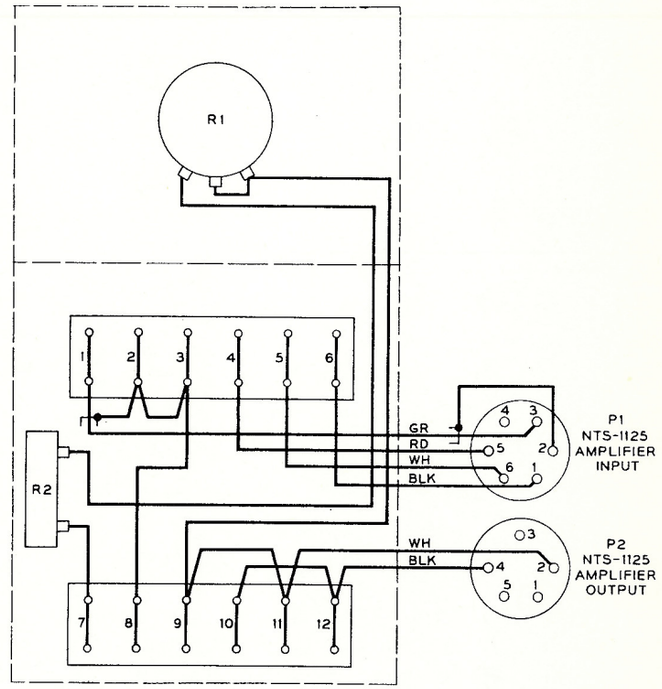

PARTS LIST		
SYM	ITEM	DESCRIPTION
P1		PLUG, 6 PRONG, AMPHENOL #86-PM-6-11
P2		PLUG, 5 PRONG, AMPHENOL #86-PM-5-11
R1		POTENTIOMETER, MALLORY M-600-P, 600Ω
R2		RESISTOR, OHMITE #1014, 200Ω, 10 WATTS

NS-122

Issued by Engineering Department
Printed in U.S.A.

ALTEC SERVICE CORPORATION
S I M P L E X

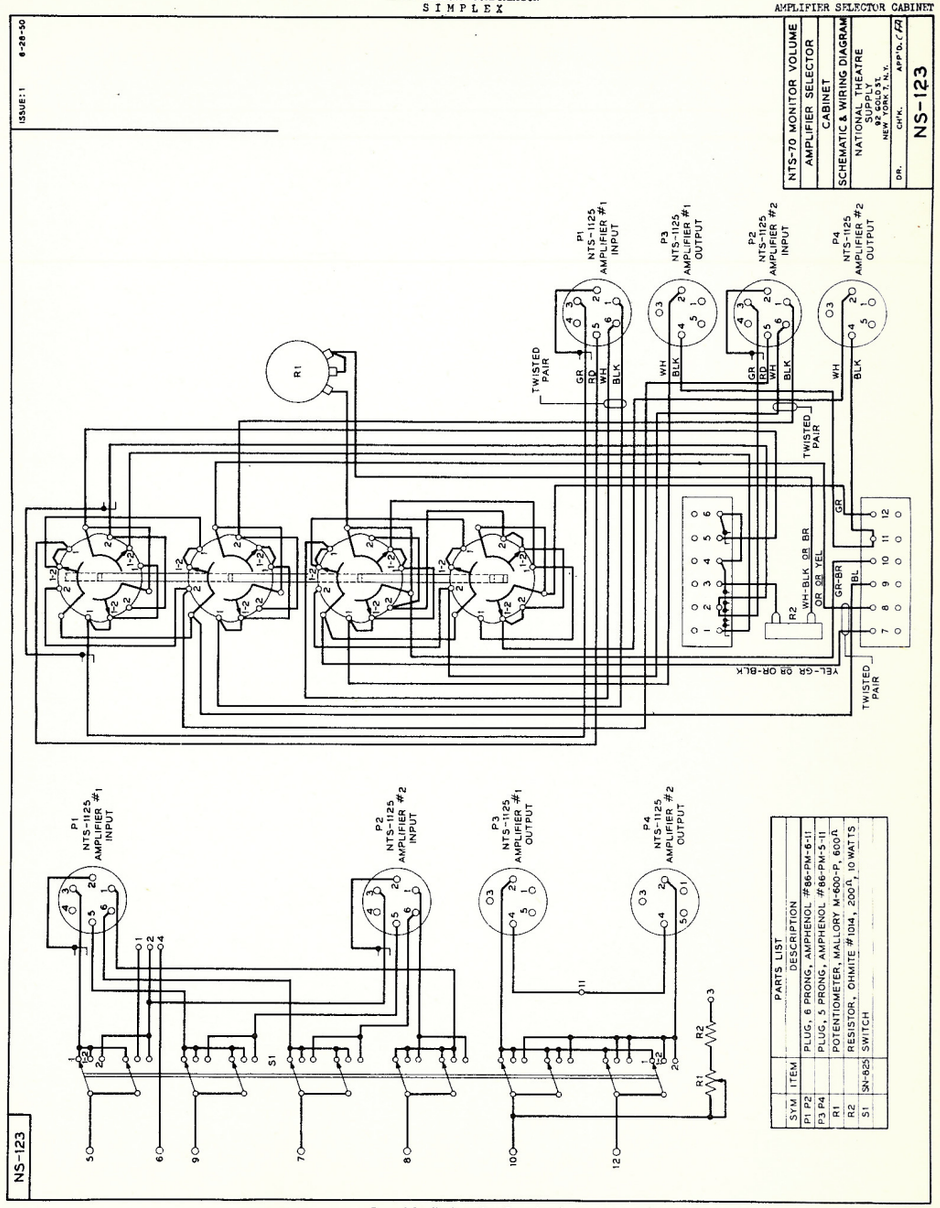

Issued by Engineering Department
Printed in U.S.A.

NS-124

ISSUE: 1 8-28-50

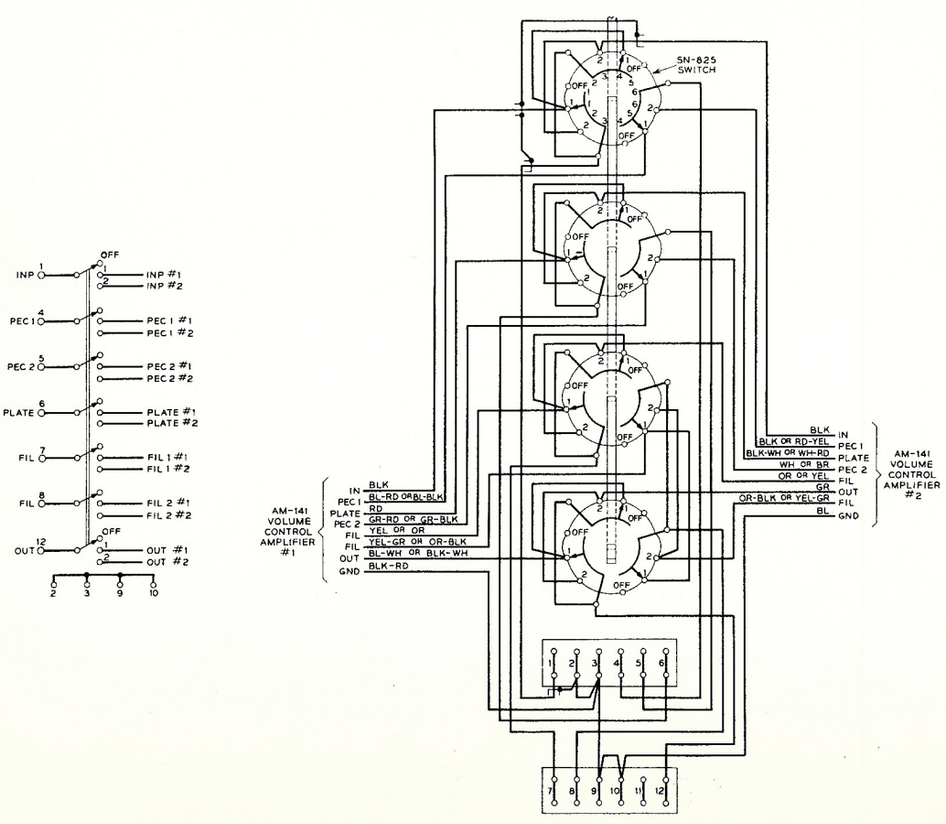

Issued by Engineering Department
Printed in U.S.A.

ALTEC SERVICE CORPORATION
S I M P L E X

NTS-76 Volume Control Amplifier Selector Cabinet 40.15

NTS-76
VOLUME CONTROL AMPLIFIER
SELECTOR CABINET
SCHEMATIC & WIRING DIAGRAM
NATIONAL THEATRE SUPPLY 92 GOLD ST. NEW YORK, 7 N.Y.
DR. CH'K. APP'D. GA
NS-124

NTS-78 AMPLIFIER
SELECTOR CABINET
SCHEMATIC & WIRING DIAGRAM
NATIONAL THEATRE SUPPLY
NEW YORK, N.Y.
DR. CH'K. APP'D. CFA
NS-125

ISSUE:1 6-28-50

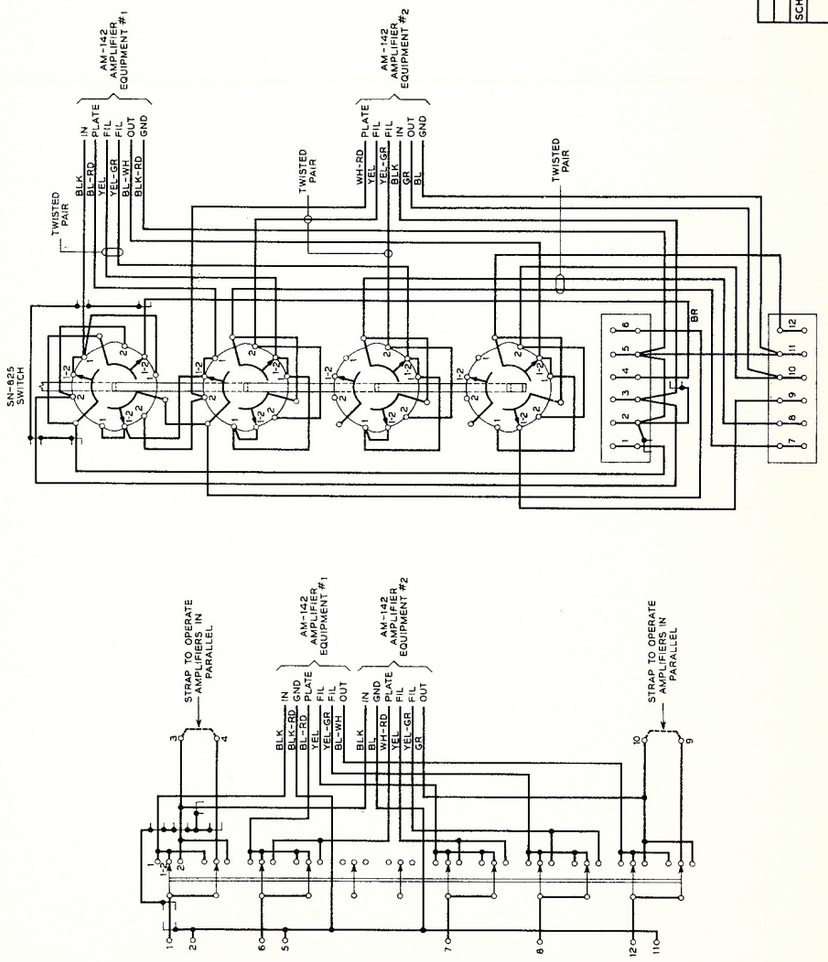

NS-125

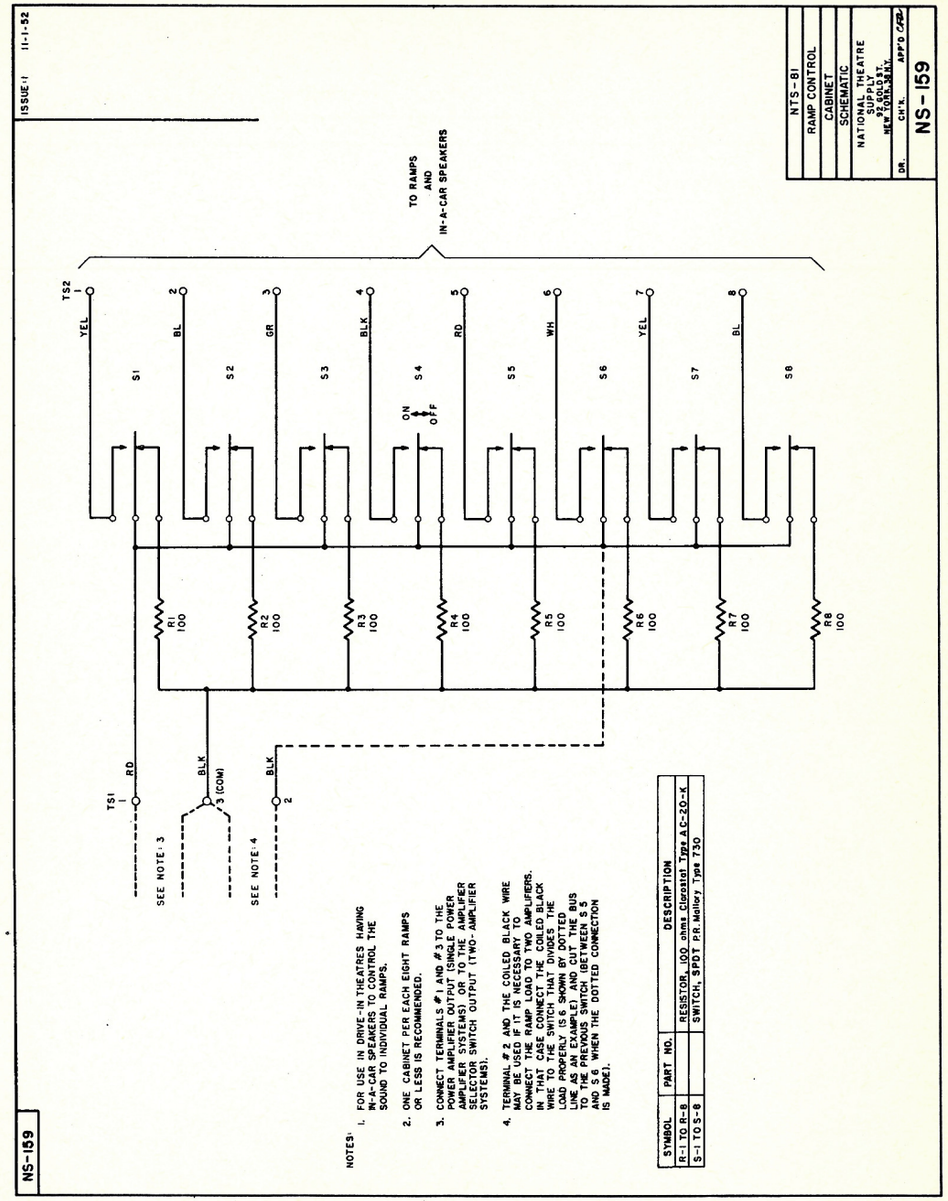

NOTES:

1. FOR USE IN DRIVE-IN THEATRES HAVING IN-A-CAR SPEAKERS TO CONTROL THE SOUND TO INDIVIDUAL RAMPS.
2. ONE CABINET PER EACH EIGHT RAMPS OR LESS IS RECOMMENDED.
3. CONNECT TERMINALS #1 AND #3 TO THE POWER AMPLIFIER OUTPUT (SINGLE POWER AMPLIFIER SYSTEMS) OR TO THE AMPLIFIER SELECTOR SWITCH OUTPUT (TWO-AMPLIFIER SYSTEMS).
4. TERMINAL #2 AND THE COILED BLACK WIRE MAY BE USED IF IT IS NECESSARY TO CONNECT THE RAMP LOAD TO TWO AMPLIFIERS. IN THAT CASE CONNECT THE COILED BLACK WIRE TO THE SWITCH THAT DOES THE LOAD PROPERLY (AS SHOWN BY DOTTED LINE AS AN EXAMPLE) AND CUT THE BUS TO THE PREVIOUS SWITCH (BETWEEN S5 AND S6 WHEN THE DOTTED CONNECTION IS MADE).

SYMBOL	PART NO.	DESCRIPTION
R-1 TO R-8		RESISTOR, 100 ohms Clarostat Type A-C-20-K
S-1 TO S-8		SWITCH, SPDT P.R. Mallory Type 730

1. DESCRIPTION.

The SH-2100 is a 6' length of SN-928 Coaxial Cable with a capacity of 8 mmf per foot enclosed in flexible metal tubing for mechanical protection. Flexible conduit connectors are provided at each end for installation purposes.

The SN-928 consists of low capacity ceramic beads strung on a stranded conductor and covered by a closely woven tinned copper shield, which is in turn covered by oil proof tape and an impregnated woven cotton braid. Each end of the shield is terminated in lugs for shield connections.

2. INSTALLATION.

A. Install the SH-2100 per Figures 1 and 2.

Caution: Unpack, handle and install the coaxial cable carefully, as sharp bends or kinks may damage it and make replacement necessary. DO NOT SHORTEN THE CABLE.

B. Strap the cable on the front wall 8" to the left of and 2" below the AM-101 using a "BX" strap per the system conduit layout. Adjust the loop so that the cable does not bind when the cover is closed and is not under tension when the cover is open. Strap the cable again on the center line of projection.

C. Strap the cable to the bracket mounted below the sound mechanism per Equipment Instruction "SH-1000 Sound Mechanism".

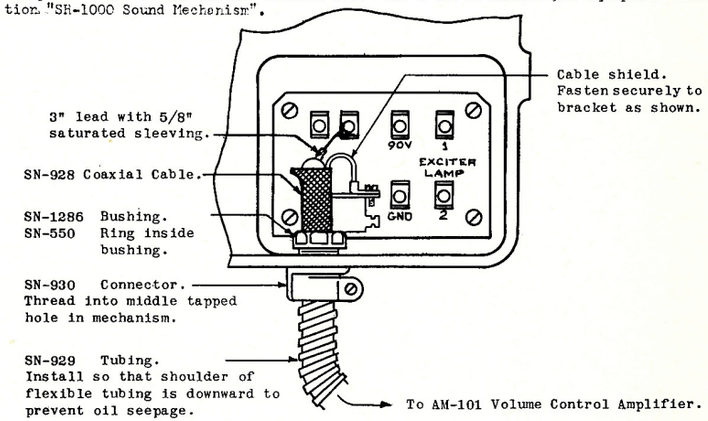

FIGURE 1. INSTALLATION OF SH-2100 IN SH-1000 SOUND MECHANISM

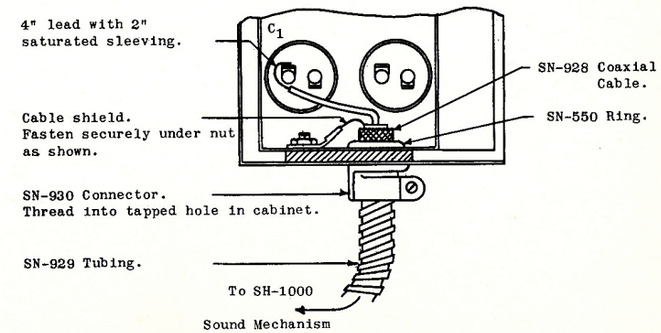

FIGURE 2. INSTALLATION OF SH-2100 IN AM-101 VOLUME CONTROL AMPLIFIER

Printed in U. S. A.

1. DESCRIPTION

The SH-2103 is an 80 inch length of a special oil proof coaxial cable (approximately 40.0 mmf capacity per foot) and two flexible oil proof wires in a flexible metal tubing with a flexible conduit connector at each end. It couples the sound mechanism to the volume control amplifier, which should be located so that the coaxial cable can be properly installed and connected.

2. INSTALLATION

The SH-2103 is shipped unassembled. EW-652 Sleeving is included. The method of assembly and installation is as follows:

A. Prepare the SN-1101 Coaxial Cable carefully per Figure 1.

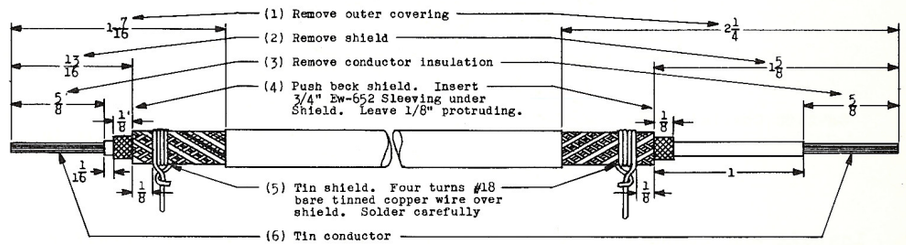

FIGURE 1

B. Assemble the coaxial cable per Figure 2

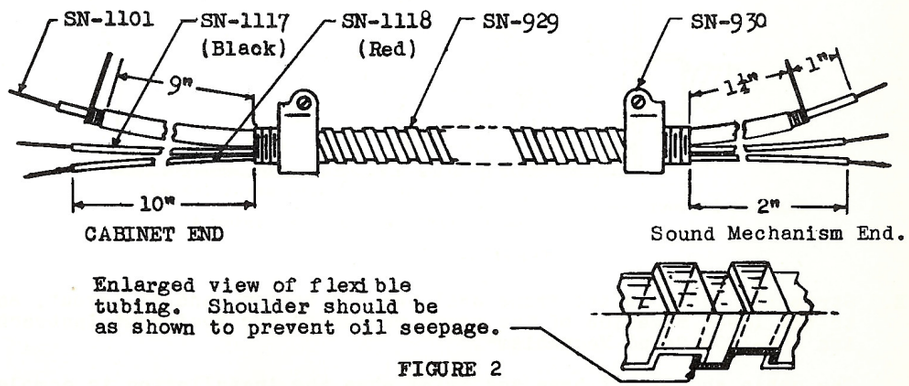

FIGURE 2

Issued by
Engineering Department
Printed in U. S. A.
September 3, 1948
Issue #2

C. Install and connect in each sound mechanism per Figure 3 and the system wiring diagram.

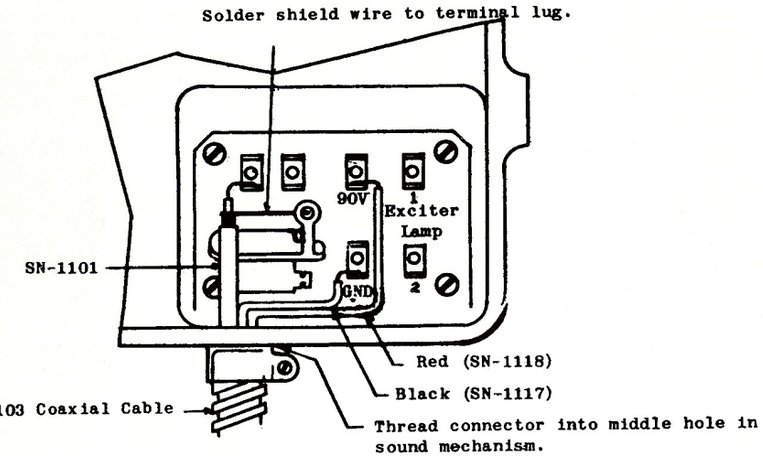

FIGURE 3

D. Install and connect in the volume control amplifier per Figure 4 and the system wiring diagram.

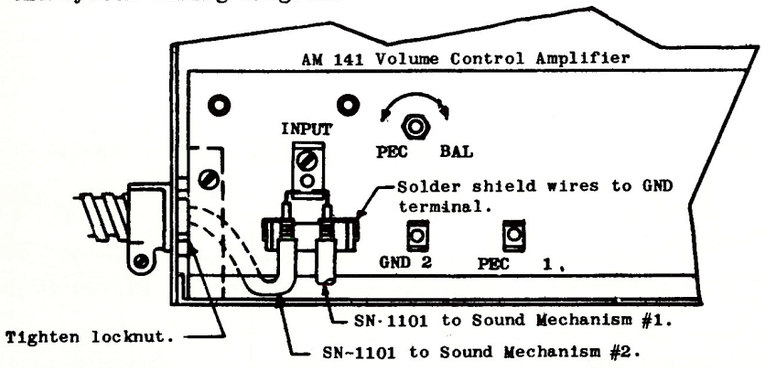

FIGURE 4

E. Strap the cable on the front wall per the system conduit layout, and to the lower magazine of the sound mechanism per Equipment Instruction "SH-1000 Sound Mechanism".

The cable should not have any twist when the installation is complete.

1. #8401 BELDEN MICROPHONE CABLE (to be obtained locally), instead of the standard coaxial cable, should be used to connect the sound mechanism output to the input of the volume control amplifier(s) on the Projection Room front wall in all concealed conduit installations. This cable should likewise be used in exposed conduit installations when front wall conditions necessitate the mounting of the volume control amplifier(s) in such a location that a cable longer than the standard coaxial cable is required. The cable should be enclosed in 3/8" flexible conduit (when the AM-141 Amplifier Equipment is supplied add two #16 BRC wires), and the cable shield soldered to the terminal lugs in the sound mechanism and volume control amplifier. Other wiring and connections should be made per the system wiring diagrams. The recommended installation methods for Simplex Pedestals are described in the following sections.

2. EQUIPMENT MOUNTING - CONCEALED CONDUIT INSTALLATIONS - The AM-101 Volume Control Amplifier, AM-2023 and AM-2033 Cabinets and LU-1024 Monitor Loudspeaker may be partially recessed in the wall for concealed conduit installation, and the conduit brought into the knockouts in the sides and bottom of the cabinets (see Figures 1 and 2) or they may be surface mounted and conduits brought into knockouts in the back or into a surface outlet box mounted below the cabinet (see Figure 3).

   The AM-141 Volume Control Amplifier and AM-142 Amplifier Equipment are surface mounted, and concealed conduits may be brought into knockouts in the back or into a surface outlet box mounted below the cabinets.

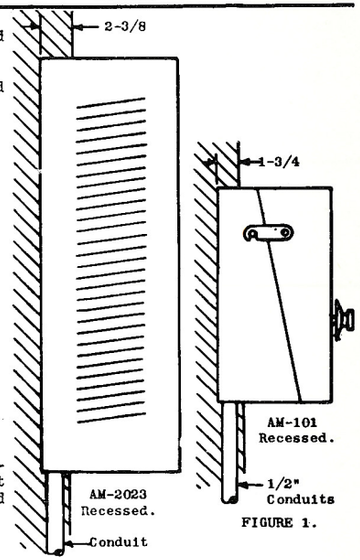

FIGURE 1.

FIGURE 2.

3. AM-101 VOLUME CONTROL AMPLIFIER - Figure 3 shows the concealed conduit installation, wiring and method of connections for surface mounting using an outlet box. Refer to Figure 1 for recessed installation, and Figures 9, 10 or 11 for concealed conduit connections to the sound mechanism. When #8401 Belden Microphone Cable is substituted for SH-2100 Coaxial Cable, a compensating capacitor (supplied by the customer) should, due to the difference in capacity of the two cables, be connected across R_7 in the cathode circuit of VT_2 in each AM-1000 Volume Control Amplifier per Figure 4 in order to obtain the frequency response characteristics shown

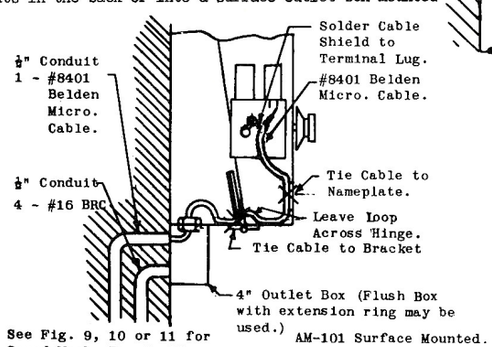

FIGURE 3

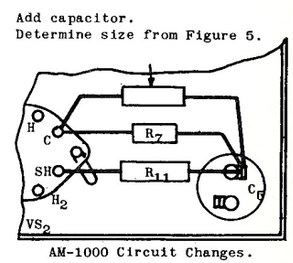

AM-1000 Circuit Changes.

FIGURE 4.

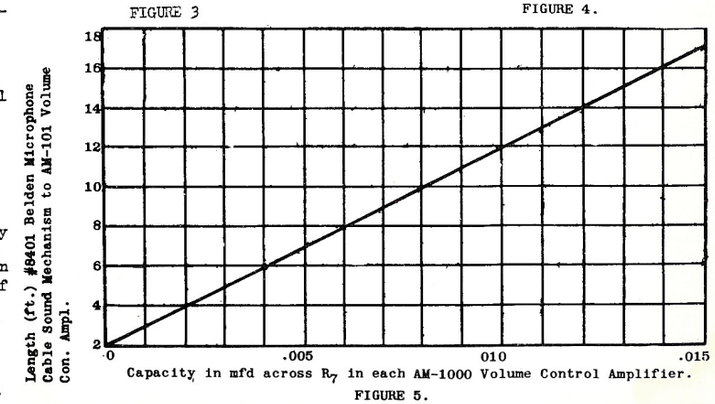

FIGURE 5.

on Drawing SC-21. Since the value of the capacitor connected across R7 depends upon the amount of #8401 Cable used, the length used for each projector should be carefully measured and the value of the capacitor required determined from Figure 5. Standard mica capacitors of 0.010 and 0.002 mfd. connected in parallel may be used.

4. AM-141 VOLUME CONTROL AMPLIFIER - Figure 6 shows the concealed conduit installation, wiring and connection methods. Refer to Figures 9, 10 or 11 for concealed conduit connections to the sound mechanism.

When #8401 Belden Microphone Cable is substituted for SN-1101 Coaxial Cable, a compensating capacitor (supplied by the customer) should, due to the difference in capacity of the two cables, be substituted for C_4 in the warping circuit of the AM-1011 Amplifier in the AM-142 Amplifier Equipment per Figure 7 in order to obtain the frequency response characteristics shown on drawing SC-43.

Since the value of the capacitor substituted for C_4 depends upon the amount of #8401 Cable used, the length used for each projector should be carefully measured and the value of the capacitor determined from Figure 8. For example, if the length required per projector is 14 feet, the capacitor required is .00033 mfd. Standard mica capacitor(s) should be used.

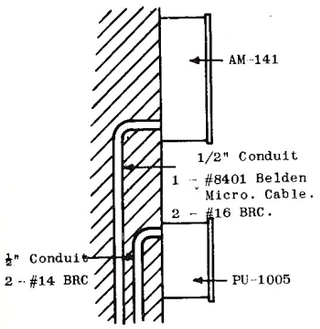

FIGURE 6.

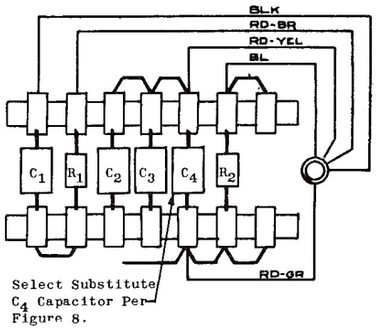

AM-1011 Amplifier Warping Circuit.

FIGURE 7.

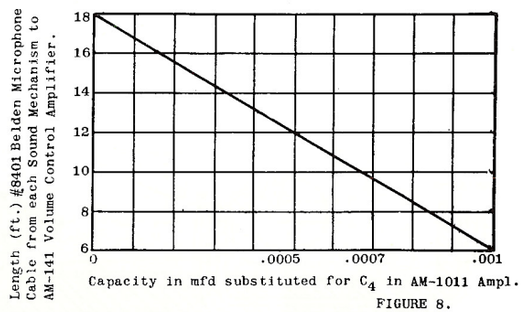

FIGURE 8.

5. SUPER SIMPLEX PEDESTALS - Figure 9 shows concealed conduit installation and wiring. The 3/8" flexible conduits from the sound mechanism to the pedestal should be about two feet long, depending upon the projection angle, and should have a sufficient loop to prevent oil from running into the outlet box in the pedestal. The switch cover plate on this box should be replaced by a flat plate built by the customer per Figure 9A. The Belden Cable between the sound mechanism and the pedestal outlet box should be covered with 5/16" I.D. Oil Proof Cambric Tubing (supplied by the customer). Refer to Figure 3 or Figure 6 for the conduit connections to the AM-101 Volume Control Amplifier or AM-141 Volume Control Amplifier and PU-1005 Power Unit.

6. TYPE "L" SIMPLEX PEDESTAL - Figure 10 shows the concealed conduit installation and wiring. A 4" outlet box should be mounted on the T-slot on the pedestal, and the 3/8" flexible conduits from the sound mechanism and the concealed conduits from the front wall terminated therein. The 3/8" flexible conduits should be approximately 18" long, depending upon the projection angle, and should have a sufficient loop to prevent oil from entering the outlet box. The Belden Cable between the sound mechanism and outlet box should be covered with 5/16" I.D. Oil Proof Varnished Cambric Tubing (supplied by the customer). Refer to Figure 3 or Figure 6 for the conduit connections to the AM-101 Volume Control Amplifier or AM-141 Volume Control Amplifier and PU-1005 Power Unit.

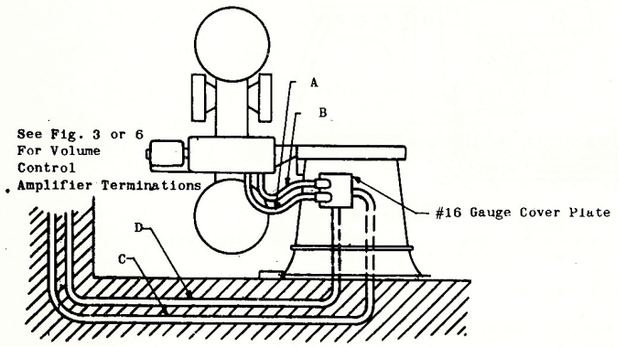

CONDUIT	WIRING AM-101	WIRING AM-141
A 3/8" Flex. Cond.) C 1/2" Conduit)	1 - #8401 Belden Micro. Cable*	1 - #8401 Belden Micro. Cable* 2 - #16 BRC
B 3/8" Flex. Cond.) D 1/2" Conduit)	4 - #16 BRC	2 - #14 BRC

* Cover with 5/16" I.D. Varnished Cambric Tubing between mechanism and pedestal.

FIGURE 9

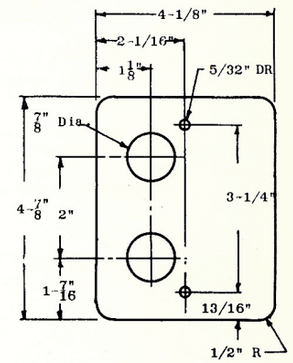

FIGURE 9-A

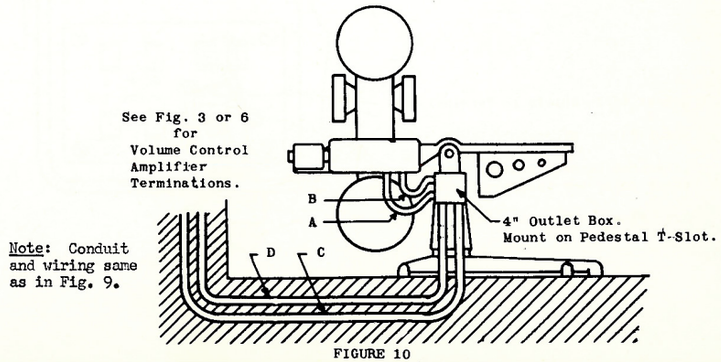

Note: Conduit and wiring same as in Fig. 9.

FIGURE 10

Issued by
Engineering Department
Printed in U. S. A.
August 15, 1949
Issue #1

7. TYPE "R" AND "M" PEDESTALS - Figure 11 shows the concealed conduit installation and wiring. The conduits from the front wall should terminate in a 4" outlet box to which the 3/8" flexible conduits from the sound mechanism should also connect. These flexible conduits should be 18" to 24" long, depending on the angle of projection, and should have a sufficient loop to prevent oil from entering the outlet box. The Belden Cable between the sound mechanism and outlet box should be covered with 5/16" I.D. Oil Proof Varnished Cambric Tubing (supplied by the customer). Refer to Figure 3 or Figure 6 for the conduit connections to the AM-101 Volume Control Amplifier or AM-141 Volume Control Amplifier and PU-1005 Power Unit.

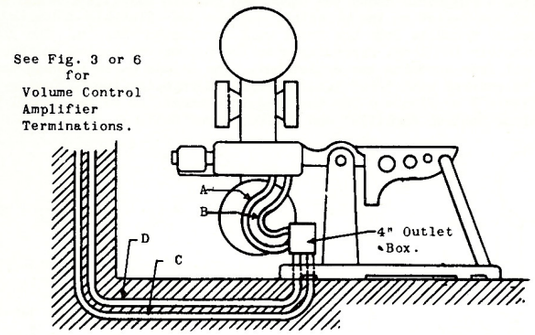

CONDUIT		WIRING AM-101	WIRING AM-141
A	3/8" Flex. Conduit)	1 - #8401 Belden Micro. Cable*	1 - #8401 Belden Micro. Cable*
C	1/2" Conduit)		2 - #16 BRC
B	3/8" Flex. Conduit)	4 - #16 BRC	2 - #14 BRC
D	1/2" Conduit)		

*Cover with 5/16" I.D. Varnished Cambric Tubing between mechanism and pedestal.

FIGURE 11.

8. SOUND MECHANISM CONNECTIONS - Figure 12 shows the method of connecting the microphone cable in the sound mechanism. Exciter lamp, 90 volt, and ground wires should be run and connected per the system wiring diagram.

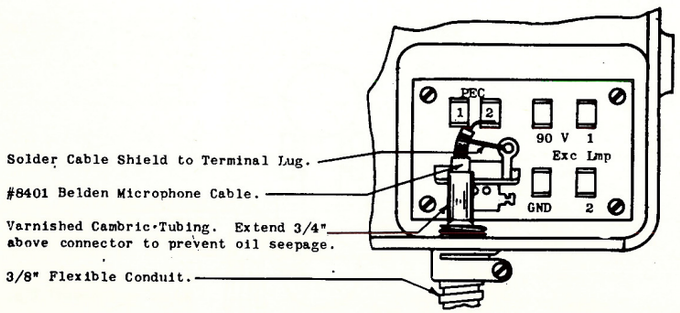

FIGURE 12

1. DESCRIPTION

The AP-17-1 Test Track, made available by the Academy of Motion Picture Arts and Sciences, affords an accurate means of checking the uniformity of illumination across the scanning slit and the adjustment of the lateral guide roller assembly in Simplex Sound Mechanisms to obtain uniform optimum sound track illumination. The test track is 230 feet long, containing 17 approximately equally spaced 1000 cycle tracks, each with an amplitude of 6.8 mils ± 1.6%. Track #1 is on the outside nearest the sprocket holes, and track #17 on the inside toward the center of the film. The tracks are so placed longitudinally on the film that only one is scanned at a time, and each track is identified before scanning. Tracks #1, 2, 16 and 17 fall outside a correctly adjusted scanning system using an 84 mil slit, so that only tracks 3 to 15 inclusive will be reproduced at full output. The maximum allowable variation in output is 3 db, that is, a tolerance of ± 1.5 db.

2. PREPARATORY PROCEDURE

In view of the precise adjustments obtainable with the Standard Scanning Illumination Test Track, it is desirable that preliminary tests and adjustments of the components be made before this test track is used. The adjustment of the PU-1000 Power Unit is extremely important and should be carefully made.

A. PU-1000 Power Unit. When this power unit is used the DC output should be carefully adjusted per Equipment Bulletin "PU-1000 Power Unit" so that the current supplied to the "ON" exciter lamp is 4 amperes DC.

B. PU-1005 Power Unit. When this power unit is used be sure the exciter lamp current is 7.0 amperes AC.

C. Exciter Lamp. The exciter lamp in each sound mechanism should be adjusted per Equipment Bulletin "SH-1000 (SH-1001) Sound Mechanism" so that the exciter lamp filament is centered horizontally and vertically on the slit in the lens tube.

D. Optical System. The lens tube and reflector lens should be adjusted per Equipment Bulletin "SH-1000 (SH-1001) Sound Mechanism". Adjustment of the lens tube should be made using the Academy 7000 or 9000 Cycle Film or ED-20 Test Film, and the warping circuit in the power amplifier changed temporarily during this adjustment in accordance with the Tuning Up Instructions for the particular system.

Positioning the reflector lens as close as possible to the film without interfering with the scanning drum has usually been found to give the best performance. The spot of light on the cathode of the photo-electric cell should be properly centered, and when this spot is adjusted to its maximum diameter it usually covers the entire width of the cathode. The exciter lamp, lens tube lenses, reflector lens and photo-electric cell should be carefully cleaned with lens tissue.

E. Lateral Guide Roller Assembly. Check the adjustment of the lateral guide roller assembly, run the Academy Buzz Track Film and adjust the roller as necessary per Equipment Bulletin "SH-1000 (SH-1001) Sound Mechanism" to eliminate frame line and sprocket hole noise. Final precise adjustment of the guide roller should be made with Standard Scanning Illumination Test Track per Section 3.

F. Photo-electric Cell. Be sure that normal PEC voltage is being supplied to each photo-electric cell and that the cell is firm in its socket. In systems using the AM-101 Volume Control Amplifier the voltage should be measured between the "PEC" and "Ground" terminals of the AM-101. In the Type "E" System it should be measured between the "90V" and "Ground" terminals of the AM-141 Volume Control Amplifier, the voltage supplied to the cells being adjustable, for output equalization, by a potentiometer connected between the "90V" terminal and the photo-electric cells of the two machines. Voltage readings are tabulated below, the vacuum tube voltmeter reading being the actual voltage. The readings using the 1000 ohm per volt voltmeter are lower due to the extra current drain of the meter.

	SYSTEM A-15, A-30, B-30, B-60, C-60	TYPE "E"
Vacuum tube voltmeter	84 volts	90 volts
1000 ohm per volt voltmeter, 100 volt scale	60 volts	65 volts

3. METHOD OF USE

A. Thread the Standard Scanning Illumination Test Track in the mechanism in the regular way.

B. Connect a volume indicator across the output of the power amplifier (AM-1001 or AM-142) and disconnect the stage speakers. In systems having LU-1002, LU-1003, or LU-1026 Networks, the volume indicator should be plugged into the network panel jack, which is connected across the amplifier output. The stage speakers should be disconnected by setting the "HF" and "LF" switches on the network panel in the "OFF" position which properly terminates the amplifier for volume indicator measurements.

In the Type "E" System the stage speaker load should be disconnected from the AM-142 Amplifier by removing the amplifier output lead (blue wire) from the amplifier "Output" terminal. The volume indicator should be connected to the blue wire and "ground" terminal, and a 12 ohm resistor of at least 10 watts capacity connected in parallel with the volume indicator to properly terminate the amplifier.

C. Run the test track and plot all volume indicator readings. If the maximum and minimum readings for tracks 3 to 15 inclusive differ by more than 3 db., lateral adjustment of the exciter lamp and/or lateral guide roller assembly is necessary until these readings are within the limits specified above.

Uneven illumination, caused by lateral displacement of either the exciter lamp or lateral guide roller assembly from optimum position, or vertical displacement of the exciter lamp from optimum position, may cause distortion and decrease the output level. However, the optical system and exciter lamp used in Simplex Sound Mechanisms have been especially designed so that moderate displacement of the exciter lamp from optimum position has a minimum effect on illumination.

In the optical system used, the condenser lens forms an image of the light source in the objective lens, a mechanical slit is placed close to the condenser lens, and since the aperture of the condenser lens is circular the useful portion of the light source is limited in width to the diameter of the objective lens.

Other optical systems wherein the light source is imaged in the plane of the mechanical slit, which is in turn imaged on the film plane, or which consist of cylindrical lenses wherein the smaller dimension of the source is imaged directly on the film, exciter lamps of different design are necessary. In the former of these two optical systems the light source is of the same general proportions as the slit, and the vertical adjustment is extremely critical. In the latter case coil filaments of approximately the same proportions are used, but the diameter and horizontal alignment of the coil must be held to close limits for optimum results.

D. If track 3 is below the lower limit, its illumination is inadequate and the exciter lamp bracket should be moved outward carefully and/or lateral guide roller assembly moved inward. Adjustments of both exciter lamp and lateral guide roller assembly should be made to be sure that the optimum position of both is obtained.

E. If track 15 is below the lower limit, its illumination is inadequate and the exciter lamp bracket should be moved inward carefully and/or lateral guide roller assembly moved outward. Adjustments of both the exciter lamp and lateral guide roller assembly should be made to be sure that the optimum position of both is obtained.

F. One of the middle tracks may occasionally be below the lower limit. If such a condition is encountered, the exciter lamp should be inspected carefully as a sagging filament is indicated.

G. The above tests should be made on each machine and until all readings taken on tracks 3 to 15 inclusive are within the specified limits. This test track is an accurate means of adjustment, and extreme care should be taken in making the test and any necessary adjustments.

Supersedes Networks, LU-1002 1003, 1003-X, 1026, Issue 1, June 25, 1941

1. PHYSICAL DIMENSIONS & ELECTRICAL CHARACTERISTICS

CODE NUMBER	IMPEDANCE INPUT	IMPEDANCE OUTPUT L.F.	IMPEDANCE OUTPUT H.F.	CROSSOVER FREQUENCY	APPROXIMATE WEIGHT LBS.	DIMENSIONS	DRAWINGS
LU-1002	12	12	12	400	19	8-1/2" H x 17" W x 10" D	WD-116
LU-1003	6	6	6	400	24	8-1/2" H x 17" W x 10" D	WD-117
LU-1003-X	6	6	6	400	24	8-1/2" H x 17" W x 10" D	WD-200
LU-1026	12	6	12	400	37	8-1/2" H x 17" W x 10" D	WD-124
LU-1047	12	12	12	800	5-1/4	7"H x 5-3/8" W x 6-1/4"D	E.B. 40.21
LU-1084	12	12	12	500	24	8-1/2" H x 17" W x 10" D	WD-1012

2. DESCRIPTION

Each of these networks, except LU-1047 (See E. B.) is a two-way parallel type dividing network on a chassis. A terminal strip on an external cable form is provided for external connections. Two switches (for stage loudspeaker testing, frequency response measurements and emergency operation), a monitor volume control rheostat, and a jack for headset monitoring or frequency response measurements are mounted on the front panel. A vacuum tube socket, into which an AM-1003 Monitor Amplifier may be plugged, and a monitor amplifier "ON"-"OFF" switch are on the chassis. Adjustable L-Pad resistors are provided in the H.F. speaker circuit for use in tuning-up.

3. INSTALLATION

These networks, except LU-1047 (See E.B.) should be installed in the AM-2023 Cabinet as shown on the system conduit layout drawing and connections made to the terminal strip per the system wiring diagram. The heater and plate supply leads for the monitor amplifier where used should be connected when the network is installed so that the monitor amplifier may be mounted without delay.

A. H.F. Speaker L-Pad Resistors, providing adjustable attenuation in the H.F. speaker circuit, may be adjusted as required per the associated drawing to obtain optimum balance between H.F. and L.F. speakers.

B. Frequency Response Measurements. With the "H.F." and "L.F." switches in the "OFF" position, plug the V.I. into the jack on the front panel. This terminates the AM-1001 Amplifier(s) into the following impedances on the input of the network as indicated.

LU-1002	12 ohms
LU-1003 or LU-1003X	6 or 12 ohms *
LU-1026	6 or 12 ohms *
LU-1084	6, 12 or 24 ohms *

* Two 12 ohms resistors are provided in LU-1003, LU-1003-X, LU-1026 and LU-1084 Networks. Wire these resistors to match recommended load impedance of amplifier combination under test.

Note: Where the LU-1047 Network is installed, disconnect output lead and terminate amplifier with a 12 ohm external resistor .

4. OPERATION (These facilities are not provided in the LU-1047 Network)

Normal. Set the "H.F." and "L.F." switches in "ON" position. Set the "Monitor Ampl". switch in "ON" position when the AM-1003 Monitor Amplifier is used. If the monitor amplifier is not used, set this switch in "OFF" position.

Emergency. In case of failure of the high frequency stage speaker(s), set the "H.F." switch in "OFF" position and the "L.F." switch in "ON" position. The network is then disconnected, and the L.F. speaker(s) operates across the full output of the AM-1001 Amplifier(s).

Stage Speaker Testing. The stage speakers may be tested as follows, and if the reproduction indicates a defective unit it should be replaced at once:

Issued by
Engineering Department
Printed in U. S. A.

March 5, 1948
Issue #1

4. (cont'd.)

(1) H.F. Speakers. Set the "H.F." switch in "ON" position and the "L.F." switch in "OFF" position. This permits testing of a single speaker where used or of the H.F. speakers as a group. To test each speaker separately, lift each of the external connections to the H.F. terminals of the network.

(2) L.F. Speakers. Set the "L.F." switch in "ON" position, and the "H.F." switch in"OFF" position. This permits testing of a single speaker where used or of the two L.F. speakers as a group. To test each speaker separately, lift each of the external connections to the L.F. terminals of the network.

NOTE: Where 4 L.F. speakers are installed, 2 of the 4 may be tested as a group by lifting each of the external connections to the L.F. terminals of the network.

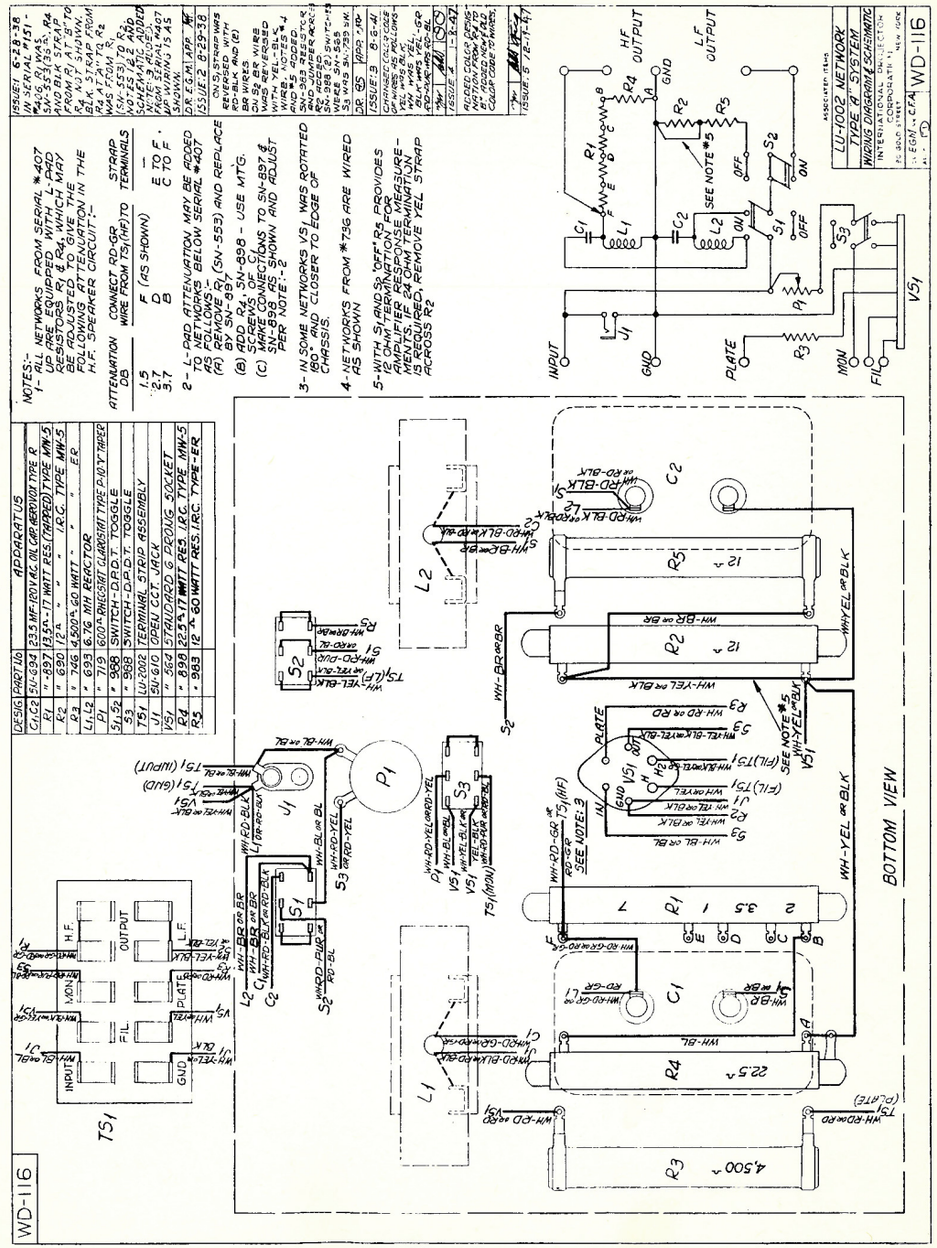

Printed in U.S.A.