ALTEC SERVICE COMPANY

MOTIOGRAPH SOUND EQUIPMENT BULLETIN

MAY 25, 1957

ISSUE #2 part 2 of 2

Scanned by Patrick Jankowiak KD5OEI

What's in here?
The Altec Service Company was a branch of Altec in the busines of servicing all kinds of movie theater audio and film gear. This is but one of many volumes concerning this work. It is invaluable for anyone seeking more knowledge of old-time high fidelity sound reproduction systems made from the 1930's to the 1950's. This includes Schematics, Factory mods, Factory upgrades, Setup instructions, Confidential Field Bulletins, and other generally unpublished information not available anywhere else

What does it pertain to?
According to the table of contents…

Amplifiers	- some 15 different models, several WE, a couple high power.
Baffles	- at least 6 kinds
Control Cabinets	- three, plus variants
Horns	- two kinds of HF horns
Loudspeakers	- fourteen varieties comprising several theater systems
Motors	- two kinds of projector motors
Networks	- three. These adjust the characteristics for the entire system. This is often overlooked or misunderstood by WE fans today.
Power Units	- eight kinds of power supplies
Reproducers	- these get the audio off the film and have their own characteristics.
Switching Panels	- three variants
Systems	- nine types
Transformers	- The SE-7040
Transmission Data	- EQ methods and curves that may be of use.

What kinds of equipment?
Many Western Electric and several less-known but fine other kinds (Bogen etc). Simplex Projectors – as these are after all where the movie sound comes from!

What is the resolution?
300DPI

Dedication:

This scan is dedicated to peace, spiritual and military strength, the rights of individuals to bear arms, and to assemble, speak the truth openly, and worship freely, and to goodwill among all truly God-fearing peoples.

None of these are mutually exclusive in a free society.

ALTEC SERVICE CORPORATION
Simplex

LU-1003 NETWORK

WD-117

DESIG	PART No	APPARATUS
		LU-1003 NETWORK
C1,2,3,4	SU-694	23.5 MF - 120 V CAP. AEROVOX TYPE R
R1	" -899	6.75Ω 17 WATT TAPPED RES. TYPE MW-5
R2,R5	" -690	12Ω 17 WATT RES. I.R.C. TYPE MW-5
R3	" -746	4,500Ω 60 WATT RES. I.R.C. TYPE ER
L1, L2	" 783	3.35 MH REACTOR
P1	" 719	20Ω RHEOSTAT CLAROSTAT MODEL P-10 "V" TAPER
J1	" 610	OPEN CCT JACK
S1-S2	" 455	D.P.D.T. SWITCH
S3	" 739	D.P.D.T. SWITCH (TOGGLE)
T51	LU-2002	TERMINAL STRIP ASSEMBLY
T52	SU-638	TERMINAL STRIP
V51	" 561	STANDARD 6 PRONG SOCKET
R4	" -900	11.25Ω 17 WATT RES. I.R.C. TYPE MW-5

ISSUE-1 7-3-39
P1 & R4 IN SERIAL # 151 - 186 INCLD WERE #5 FOLLOWS:-
C1 .02 BLK T52 (11)
SU-553 3Ω A 36 Ω B
R4
FROM SERIAL # 187 UP R1 & R4 CHANGED AS SHOWN. NOTE 2 & 3 ADDED SCHEMATIC WAS NOT SHOWN. NOTE 4 ADDED
OK E.G.M. 7-3-39
ISSUE-2 9-20-39
LU-1002 SWITCH REMOVED. NOTES 1, 2 & 3 WERE 2, 3 & 4 RESPECT.
OK E.G.M. 9-20-39
ISSUE-3 12-15-39

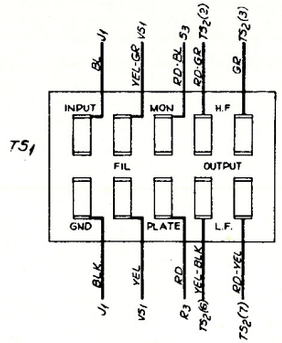

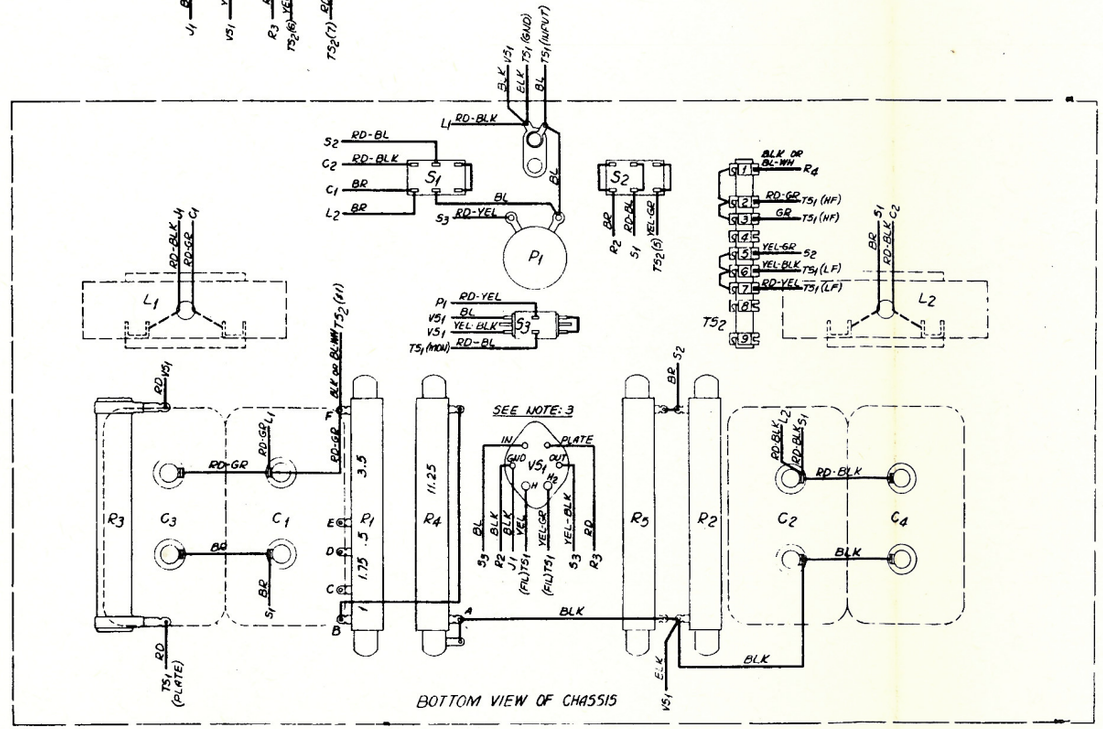

NOTES:-
1- ALL NETWORKS FROM SERIAL # 187 UP ARE EQUIPPED WITH L-PAD RESISITORS R1 & R4, WHICH MAY BE ADJUSTED TO GIVE THE FOLLOWING ATTENUATION IN THE H.F. SPEAKER CIRCUIT:-

ATTENUATION DB	CONNECT BLK OR BL-WH WIRE FROM T52 #1 TO	STRAP TERMINALS
1.5	F (AS SHOWN)	
2.7	D	E TO F
3.7	B	C TO F

2 - L-PAD ATTENUATORS MAY BE ADDED TO NETWORKS BELOW SERIAL # 187 AS FOLLOWS:-
(A) REMOVE R1 (SU-553) AND REPLACE BY SU-899
(B) REMOVE R4 (SU-553) AND REPLACE BY SU-900
(C) MAKE CONNECTIONS TO SU-899 AND SU-900 AS SHOWN AND ADJUST PER NOTE - 2.

3 - IN SOME NETWORKS V51 WAS ROTATED 180° AND CLOSER TO EDGE OF CHASSIS.

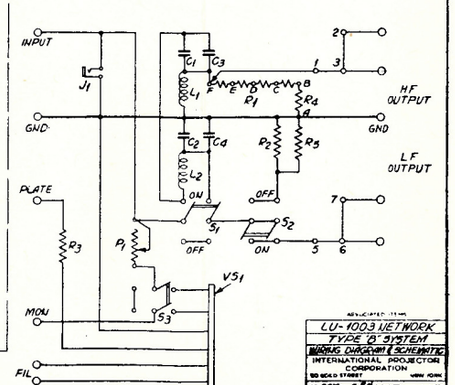

LU-1003 NETWORK
TYPE "A" SYSTEM
WIRING DIAGRAM & SCHEMATIC
INTERNATIONAL PROJECTOR CORPORATION
WD-117

WD-200

REDRAWN FROM ISSUE:2 WITH EXTENSIVE CHANGES

ISSUE:3 6-11-48

DESIG	PART NO	APPARATUS
C1 TO 4	SN-694	CAPACITOR, 23.5 MFD 120 V
J1	SN-610	JACK, OPEN CCT.
L1 & L2	SN-785	REACTOR, 3.35 MH
P1	SN-719	RHEOSTAT, 600 Ω, 4 WATT WIRE WOUND
R1 & R4	SN-900	RESISTOR, 11.25 Ω, 17 WATT
R2 & R5	SN-983	RESISTOR, 12 Ω, 60 WATT
R3	SN-746	RESISTOR, 4500 Ω, 60 WATT
R6 & R7	SN-897	RESISTOR, 13.5 Ω, 17 WATT
S1, 2 & 3	SN-988	SWITCH, D.P.D.T. TOGGLE
TS1	LU-2024	TERMINAL STRIP, INPUT
TS2	LU-2025	TERMINAL STRIP, OUTPUT
TS3	SN-638	TERMINAL STRIP, (2 REQ.)
VS1	SN-564	SOCKET, 6 PRONG

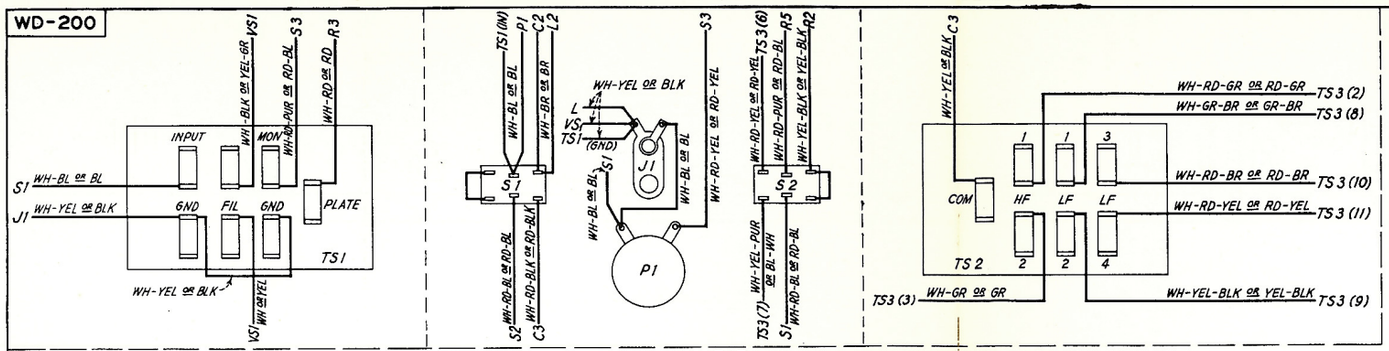

WIRING DIAGRAM
(WIRING SIDE OF CHASSIS)

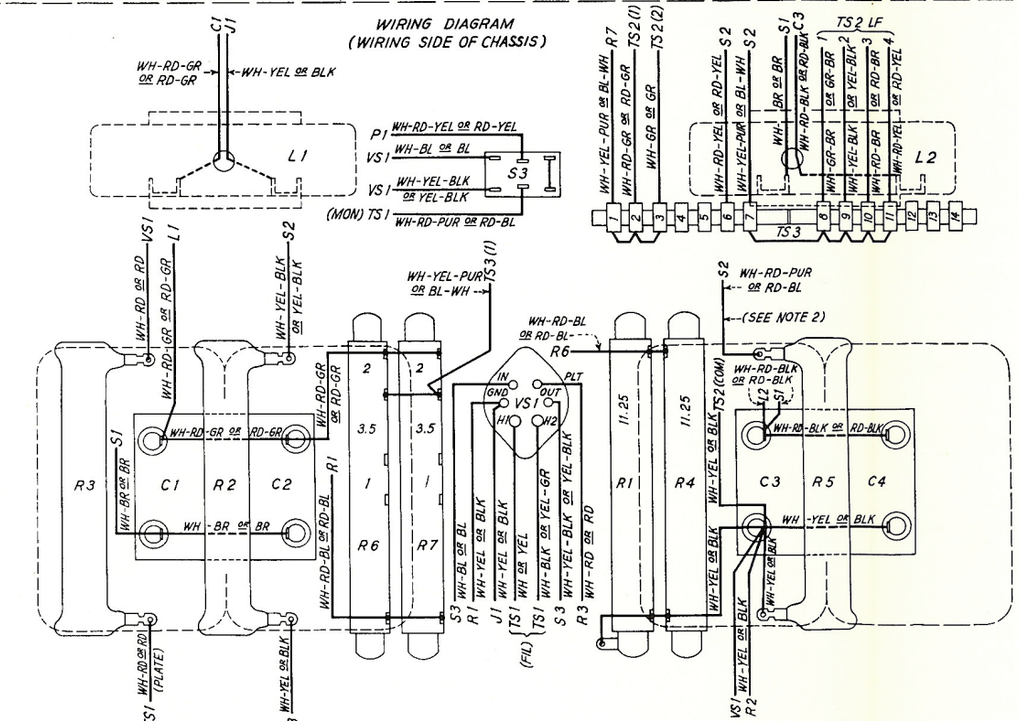

SCHEMATIC

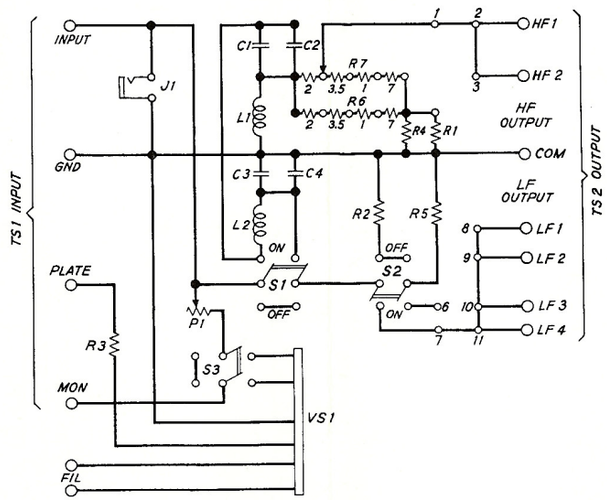

NOTES:

1. RESISTORS R1, R4, R6 AND R7 PROVIDE AN ADJUSTABLE L-PAD ATTENUATOR IN THE HF SECTION OF THE NETWORK FOR HF AND LF SPEAKER BALANCING. CONNECTIONS TO R6 AND R7 PER FIG. A TO D GIVE THE ATTENUATIONS IN THE HF SECTION SHOWN BELOW.

R6 AND R7 CONNECTIONS	ATTENUATION - DB PERMANENT MAGNET SPEAKERS	ENERGIZED FIELD SPEAKERS
FIG. A	3.2 (SHIPPED)	2.9
FIG. B	4.2	4.2
FIG. C	5.0	5.3
FIG. D	6.3	6.0

2. FOR FREQUENCY RESPONSE MEASUREMENTS SWITCHES S1 AND S2 ARE SET IN "OFF" POSITION. THE POWER AMPLIFIERS ARE THEN TERMINATED IN 6 OHMS BY R2 AND R5 IN PARALLEL. IF A 12 OHM TERMINATION IS REQUIRED DISCONNECT THE WH-RD-PUR OR RD-BL WIRE FROM R5 DURING THE MEASUREMENTS. THE AMPLIFIER OUTPUT TRANSFORMER CONNECTIONS SHOULD BE CHECKED TO DETERMINE THE PROPER MATCHING IMPEDANCE.

*ADD STRAP WHEN SPEAKERS ARE ENERGIZED

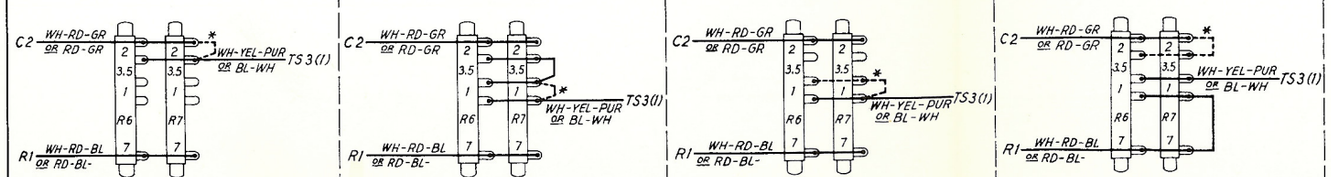

LU-1003-X NETWORK
SCHEMATIC & WIRING DIAGRAM

INTERNATIONAL PROJECTOR CORPORATION
35 LA FRANCE AVENUE
BLOOMFIELD NEW JERSEY

DR. CH'K. APP'D.

WD-200

ALTEC SERVICE CORPORATION
Simplex

LU-1026 NETWORK

WD-124

ISSUE: 1 11-4-58

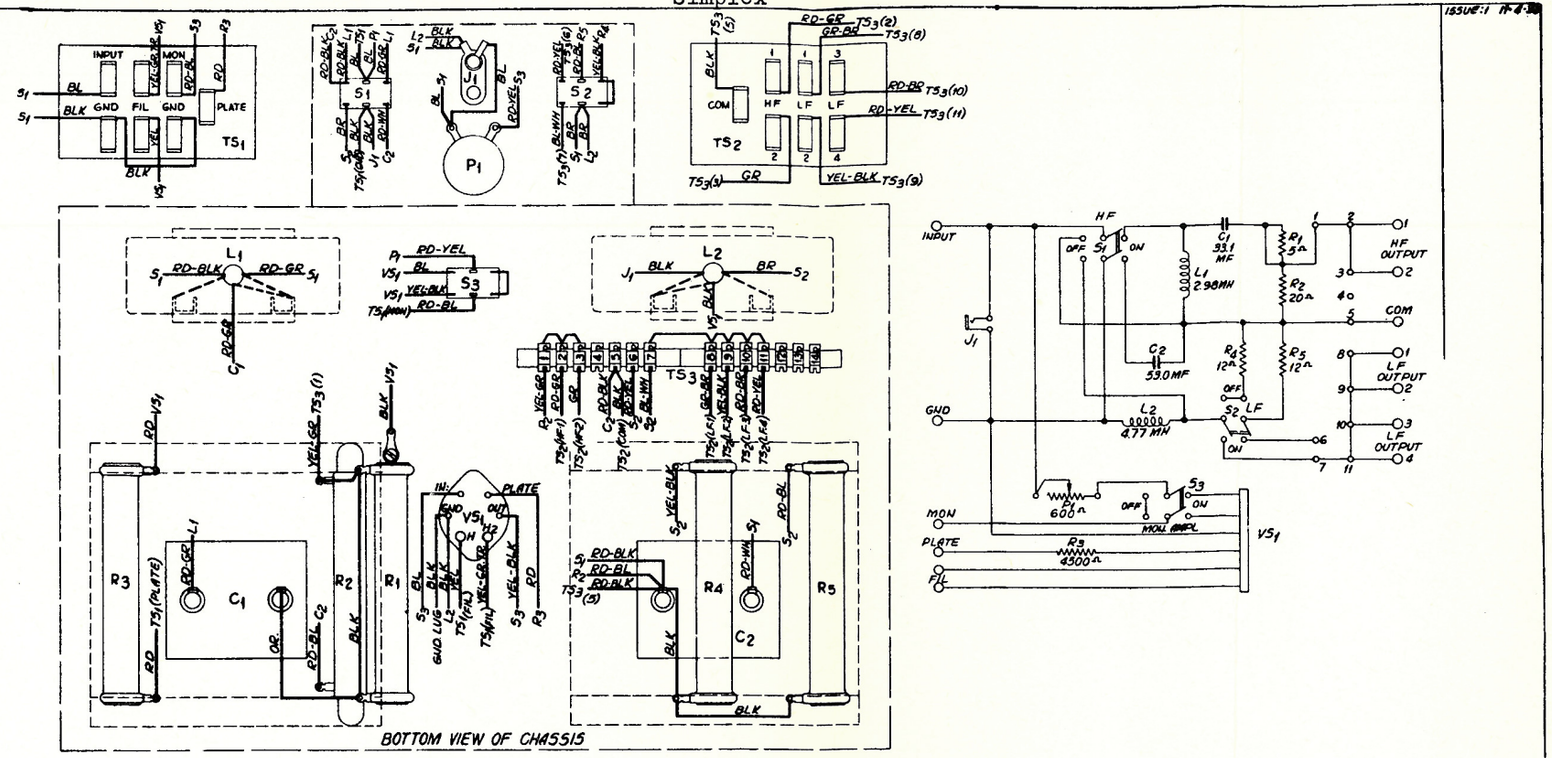

DESIG.	PART No.	APPARATUS
C_1	SW-923	CAPACITOR - 93.1 MF.
C_2	" 943	CAPACITOR - 53.0 MF.
P_1	" 982	RESISTOR - 5Ω
R_2	" 984	RESISTOR - 20Ω 17 WATT
R_3	" 746	RESISTOR - 4500Ω - 60 WATT
R_4, R_5	" 963	RESISTOR - 12Ω
L_1	" 975	REACTOR - 2.98 MH
L_2	" 976	REACTOR - 4.77 MH
S_1, S_2, S_3	" 988	D.P.D.T. SWITCH
J_1	" 610	OPEN CCT. JACK
VS_1	" 564	SOCKET
TS_1	LU-2024	TERM. STRIP - INPUT
TS_2	LU-2025	TERM. STRIP - OUTPUT
TS_3	SW-971	TERM. STRIP - (2 REQUIRED)
P_1	" 719	RHEOSTAT - 600Ω

NOTE:-
R_1 AND R_2 FOR A 4Ω L-PAD ATTENUATOR IN THE H.F. SPEAKER CIRCUIT WHICH MAY BE ADJUSTED TO GIVE THE FOLLOWING ATTENUATION:-

APPROXIMATE ATTENUATION DB	R_1, R_2 CONNECTION
2 —	AS SHIPPED (BLACK STRAP CONNECTED ACROSS R_1)
5 —	REMOVE BLACK STRAP ACROSS R_1

LU-1026 NETWORK
SCHEMATIC
WIRING DIAGRAM
INTERNATIONAL PROJECTOR CORPORATION
WD-124

1. DESCRIPTION.

The LU-1047 is a two-way, series type dividing network on a chassis 7" high x 5-3/8" wide x 6-1/4" deep, weighing 5-1/4 lbs. A terminal strip is provided for external connections. The crossover frequency is 800 cycles, the input impedance 12 ohms and the high and low frequency output impedances each 12 ohms

2. INSTALLATION.

The LU-1047 should be installed in the LU-1017 Horn in the location shown on the system conduit layout drawing, and fastened by two wood screws. Connections should be made to the terminal strip per the system wiring diagram.

A. H.F. Speaker L-Pad Resistors, providing adjustable attenuation in the high frequency speaker circuit, may be adjusted as required per the schematic below to obtain optimum balance between H.F. and L.F. speaker.

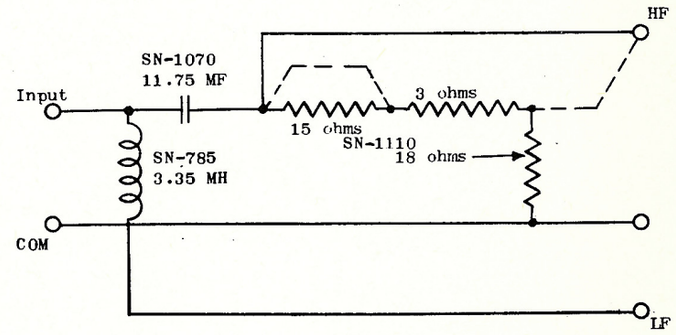

Attenuation DB	L-Pad Connections
1.5	Connections shown solid.
4.8	Connections shown dotted. (Strap out 15 ohm section and transfer HF output lead to 18 ohm section.)
8.0	Transfer HF output leads to 18 ohm section & parallel 15 ohm resistor with additional 15 ohm 10 watt resistor.

Printed in U.S.A.

Issue #2
September 15, 1941

1. DESCRIPTION.

The LU-1084 is a two-way parallel type dividing network on a chassis 8-1/2" high x 17" wide x 10" deep weighing approximately 24 lbs. Two terminal strips, each on an external cable form, are provided for external connections. The crossover frequency is 500 cycles with a nominal input impedance of 12 ohms and high and low frequency output impedances of 12 ohms. Two switches (for stage loudspeaker testing, frequency response measurements or emergency operation), a monitor volume control rheostat and jack for head set monitoring or frequency response measurements are mounted on the front panel. A vacuum tube socket, into which an AM-1003 Monitor Amplifier may be plugged, and a monitor amplifier "ON-OFF" switch are on the chassis. Heater and plate supplies for the monitor amplifier are obtained from the AM-1001 Amplifier. Adjustable L-Pad resistors are provided in the H. F. speaker circuit for use in tuning up.

2. INSTALLATION.

The LU-1084 should be installed in the AM-2023 Cabinet in the location shown on the system conduit layout drawing and per the Equipment Instruction "AM-2023 Cabinet", which is packed with the cabinet.

A. H. F. Speaker L-Pad resistors provide adjustable attenuation in the H. F. Speaker circuit and may be adjusted as required, per the associated drawing WD-1012, to obtain optimum balance between the H. F. and L. F. speakers.

B. Frequency Response Measurements. Plug the volume indicator into the jack on the front panel and set the H. F. and L. F. switches in the "OFF" position. The power amplifiers (AM-1001 or AM-1019) may then be terminated in either 6,12 or 24 ohms, in accordance with the associated drawing WD-1012, to obtain impedance matching. Check the amplifier output transformer connections to determine the matching impedance required. Refer to Equipment Instruction "AM-1001 Amplifier" for further details regarding its output transformer connections.

3. OPERATION.

A. Normal. Set the H. F. and L. F. switches in "ON" position. Set the monitor switch in "ON" position when the AM-1003 Monitor Amplifier is used. If the monitor amplifier is not used set this switch in "OFF" position.

B. Emergency. In case of failure of one of the high frequency stage speakers, set the H. F. switch in "OFF" position and the L. F. switch in "ON" position. The network is then disconnected and the L. F. speakers operate across the full output of the final amplifier(s).

C. Stage Speaker Testing. Stage speakers should be tested each day as follows and if the reproduction indicates a defective unit it should be replaced at once.

(1) H. F. Speakers. Set the H. F. switch in "ON" position and the L. F. switch in "OFF" position. This permits testing of all H. F. speakers as a group. To test each speaker separately lift each of the external connections to the H. F. terminals of the network.

(2) L. F. Speakers. Set the L. F. switch in "ON" position and the H.F. switch in "OFF" position. This permits testing of all L. F. speakers as a group. Where all L. F. speakers are connected in parallel, each speaker may be tested individually by lifting each of the external connections to the L. F. terminals of the network. When L. F. speakers are connected in series parallel, each group of two speakers in series may be tested by lifting the proper external connections to the L. F. terminals of the network.

4. ASSOCIATED DRAWING. WD-1012 LU-1084 Network, Schematic and Wiring Diagram

Issued by
Engineering Department
Printed in U. S. A.
Issue #1
June 3, 1946

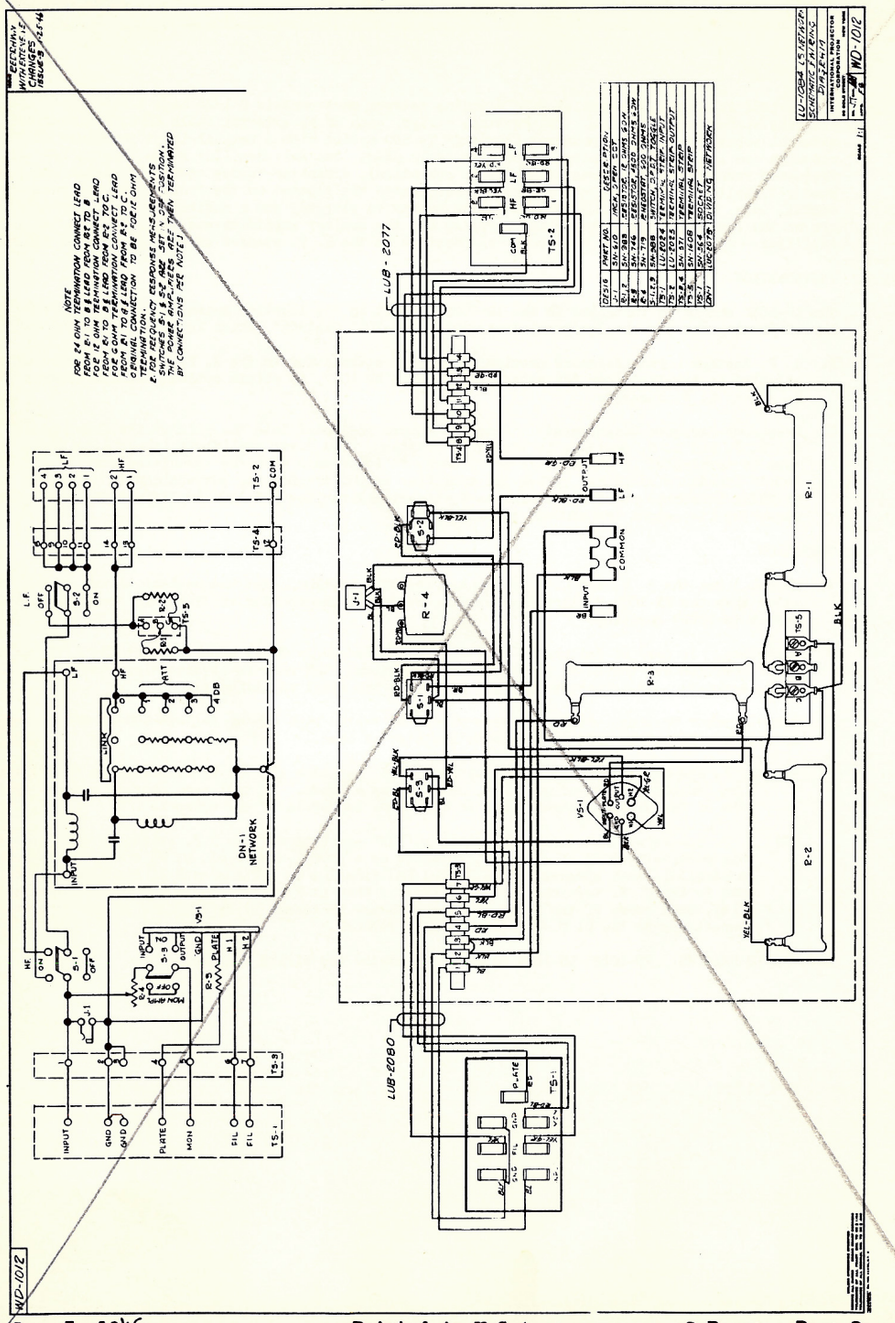
LUB-2077
LUB-2080
DN-1 NETWORK
R-4
R-3
R-2
R-1
S-1
S-2
S-3
S-4
S-5
T5-1
T5-2
T5-3
T5-4
T5-5
INPUT
GND
PLATE
MON
FIL
COMMON
OUTPUT
HF
LF
BLK
YEL-BLK

WD-1012

REDRAWN FROM ISSUE:5 WITH EXTENSIVE CHANGES

ISSUE: 6 6-11-48

DESIG	PART NO.	DESCRIPTION
J1	SN-610	JACK, OPEN CCT
R1, 2	SN-983	RESISTOR, 12 OHMS, 60 W
R3	SN-746	RESISTOR, 4500 OHMS, 60 W
R4	SN-719	RHEOSTAT, 600 OHMS
S1, 2, 3	SN-988	SWITCH, D.P.D.T. TOGGLE
TS 1	LU-2024	TERMINAL STRIP, INPUT
TS 2	LU-2025	TERMINAL STRIP, OUTPUT
TS 3, 4	SN-571	TERMINAL STRIP
TS 5	SN-1608	TERMINAL STRIP
VS 1	SN-564	SOCKET, 6 PRONG
DN 1	LUC-2075	DIVIDING NETWORK

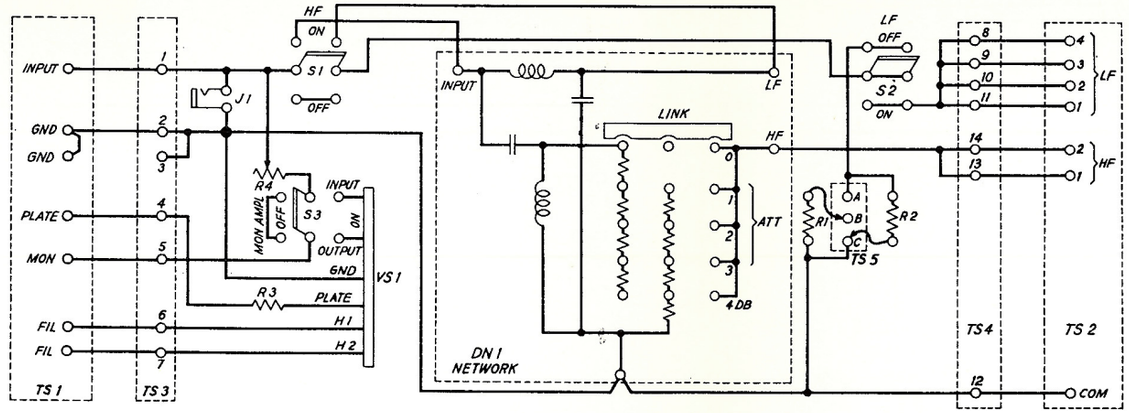

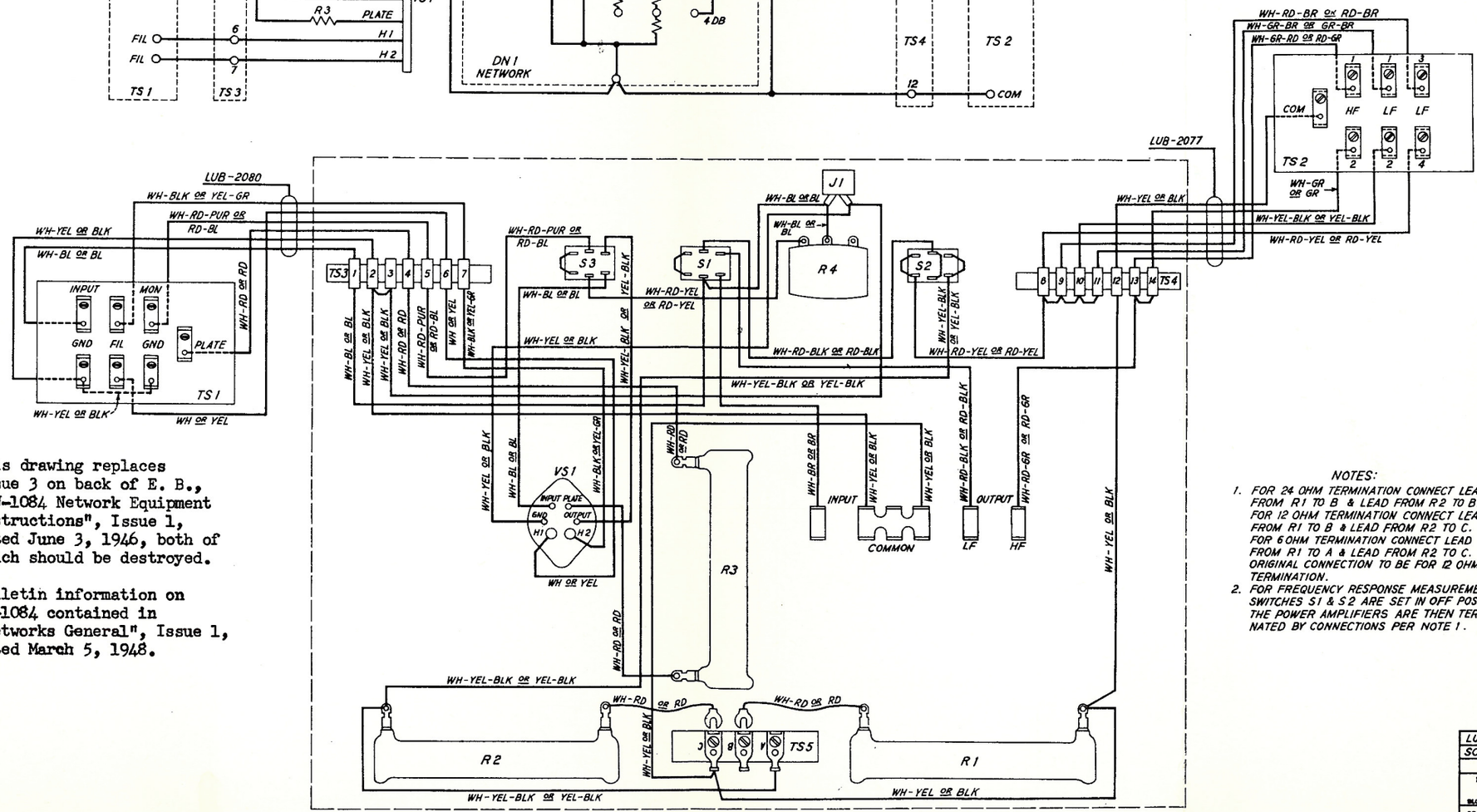

NOTE: This drawing replaces Issue 3 on back of E. B., "LU-1084 Network Equipment Instructions", Issue 1, dated June 3, 1946, both of which should be destroyed.

Bulletin information on LU-1084 contained in "Networks General", Issue 1, dated March 5, 1948.

NOTES:

1. FOR 24 OHM TERMINATION CONNECT LEAD FROM R1 TO B & LEAD FROM R2 TO B. FOR 12 OHM TERMINATION CONNECT LEAD FROM R1 TO B & LEAD FROM R2 TO C. FOR 6 OHM TERMINATION CONNECT LEAD FROM R1 TO A & LEAD FROM R2 TO C. ORIGINAL CONNECTION TO BE FOR 12 OHM TERMINATION.
2. FOR FREQUENCY RESPONSE MEASUREMENTS SWITCHES S1 & S2 ARE SET IN OFF POSITION. THE POWER AMPLIFIERS ARE THEN TERMINATED BY CONNECTIONS PER NOTE 1.

LU-1084 LS NETWORK
SCHEMATIC & WIRING
DIAGRAM

INTERNATIONAL PROJECTOR CORPORATION
55 LA FRANCE AVENUE
BLOOMFIELD NEW JERSEY

DR. CH'K. APP'D.

WD-1012

Code #	Description & Distribution Angle	Overall Dimensions Note 1			Requires		Approximate Net Weight With Unit(s) Note 2
		H	W	L	Throat	Speaker(s)	
1001	2 x 4 Multi-cellular 35° Vert. - 70° Horiz.	20"	31"	38"	Single	1 - LU-1060 PM	45 Lbs.
1029	2 x 4 Multi-cellular 35° Vert. - 70° Horiz.	20"	31"	37"	Double	2 - LU-1060 PM	60 Lbs.
1049	1 x 3 Multi-cellular 17.5° Vert. - 52.5° Horiz.	14"	20"	21"	Single	1 - LU-1060 PM	27 Lbs.
1012	3 x 4 Multi-cellular 52.5° Vert. - 70° Horiz.	22-1/2"	30"	31"	Double (Note 3)	2 - LU-1011 Energized Field	167 Lbs.
1013	3 x 5 Multi-cellular 52.5° Vert. - 87.5° Horiz.	23-1/2"	38-1/2"	31"	Double (Note 3)	2 - LU-1011 Energized Field	208 Lbs.
1014	3 x 6 Multi-cellular 52.5° Vert. - 105° Horiz.	23-1/2"	45"	31"	Double (Note 3)	2 - LU-1011 Energized Field	228 Lbs.
1019	2 x 5 Multi-cellular 35° Vert. - 87.5° Horiz.	16"	38-1/2"	31"	Double (Note 3)	2 - LU-1011 Energized Field	149 Lbs.

NOTES:
1. Overall length of horn includes speaker units. For length of horn less speaker unit deduct 8" for PM speaker and 5" for Energized Field speaker.
2. For weight of horn less speaker unit deduct 21 lbs. for each PM speaker and 26 lbs. for each Energized Field speaker.
3. These throats are detachable.

Printed in U.S.A.
Issue #1
October 15, 1941

1. DESCRIPTION.

The LU-1018 is a permanent magnet, cone type loudspeaker, 8" in diameter, 4" deep, weighing 11 lbs. The input transformer has two primary windings, which may be connected in series or in parallel to give an input impedance of 50 or 12½ ohms, and a secondary winding with an impedance of 6 ohms. The impedance of the voice coil is 6 ohms.

2. INSTALLATION.

The LU-1018 should be installed in the LU-1024 Horn in accordance with the Equipment Bulletin LU-1024 Monitor Loudspeaker.

A. Connections to Input Transformer. The primary windings should be connected in parallel when a monitor amplifier is <u>not</u> installed, and in series when a monitor amplifier <u>is</u> installed, in accordance with the following sketch:

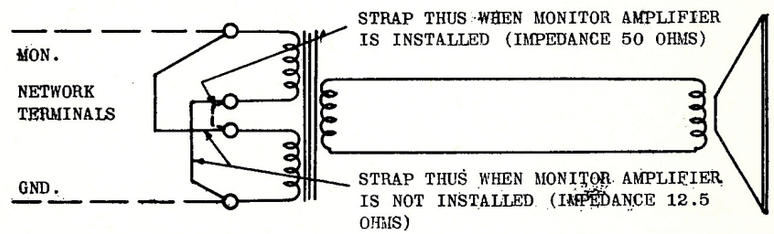

NOTE: - If a monitor amplifier is installed after the initial installation, the transformer connections should be carefully checked, and re-connections made per the above sketch.

3. OPERATION.

The Monitor volume control, located on the front panel of the network, should be adjusted for proper volume.

Printed in U. S. A.

1. DESCRIPTION.

The LU-1024 is a metal, folded, exponential type horn (8½" high x 20" wide x 12½" deep, weight 17 lbs.) equipped with a removable front cover, formed to three sides of a hexagon. The monitor speaker unit mounts behind the opening in the center section of the cover, and is protected by a metal grille. The other two sides of the cover are provided with louvres. Two vertical partitions in the horn are of aluminum to avoid weakening the magnetic field of the monitor unit. High frequency sound is radiated from the front of the speaker cone and low frequency sound from the rear through the louvres, thus giving full range high quality reproduction.

2. INSTALLATION.

The LU-1024 should be located in the Projection Room so that sound is audible at both projectors but is not projected through the ports into the balcony. It may be installed on the front or side wall (preferably left) by means of two holes in the rear, on the ceiling or on top of the system cabinet, using the mounting brackets provided. (See sketch on Page 2.)

NOTE:- Three holes are provided in the AM-2023 Cabinet for mounting the SN-713 Angles and SN-875 Leg. Similarly three holes are provided in the LU-1024 Monitor Loudspeaker for mounting the SN-714 Bracket and SN-875 Leg. It is not necessary to drill holes in the AM-2023 or LU-1024.

Five mounting holes are provided in the SN-714 Bracket for convenience in mounting on the ceiling or on the LU-1024. Two of the holes line up with holes in the LU-1024. Four holes are provided in the long side of the SN-875 Leg so that the LU-1024 may be tilted as required for sound distribution.

A. Installation of LU-1018 Monitor Unit. Take off the cover of the LU-1024, remove the nuts and washers from the four screws on the front of the cover, mount the monitor unit, replace washers and nuts, and tighten. Strap the terminals of the unit per Equipment Instruction "LU-1018 Monitor Unit", and make connections per the system wiring diagram.

B. Installation of Cover of LU-1024. In replacing the cover after the monitor unit has been mounted on it, all eight mounting screws should be threaded into the holes before any are tightened. The four mounting screws on the front of the cover should then be tightened first to make sure that the cover seats properly.

3. MAINTENANCE.

The cover and partition mounting screws should be checked periodically, and any loose screws tightened. For quality reproduction it is essential that all screws be tight. If the threads in the partitions become stripped, replace the screws with the larger Parker Kalon screws shipped loose with the horn.

Printed in U. S. A.
June 15, 1941
Issue #1

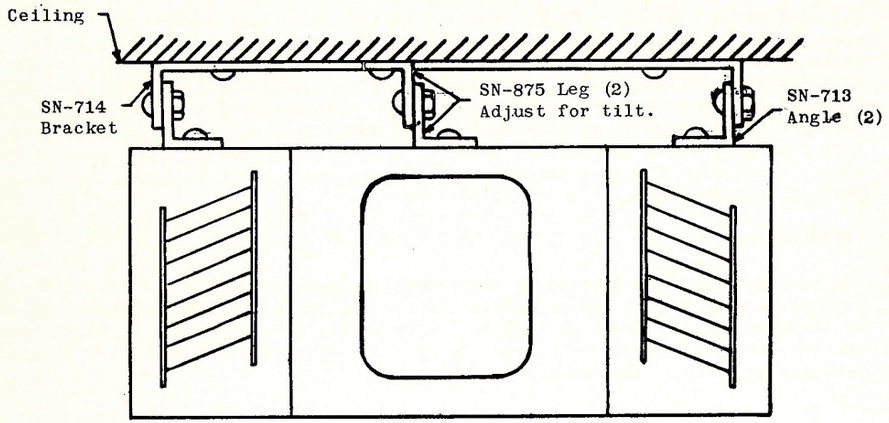

LU-1024 Monitor Loudspeaker Mounted on Ceiling.

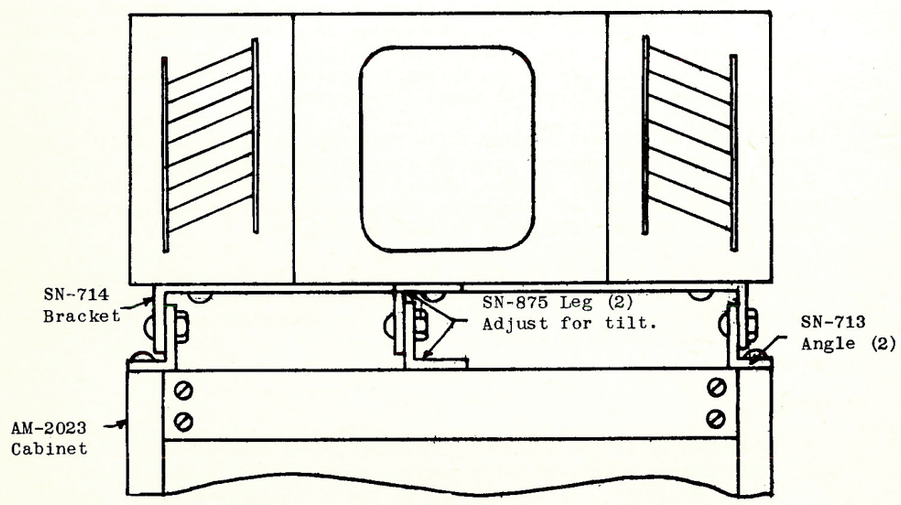

LU-1024 Monitor Loudspeaker Mounted on AM-2023 Cabinet.

WD-135

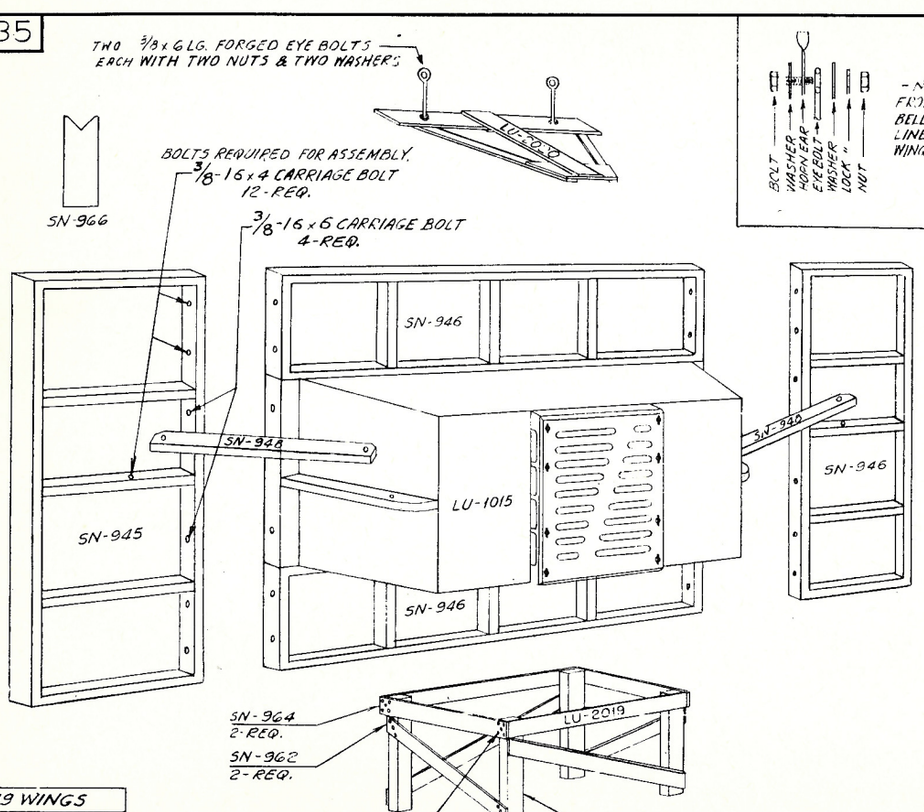

LU-2019 STAND IS ASSEMBLED AS SHOWN WITH #10 x 1½" LONG WOOD SCREWS.

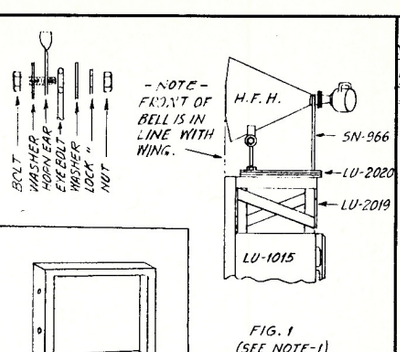

FIG. 1 (SEE NOTE-1)

ISSUE:-1 10-14-38
1/4-20 X 6 BOLT WAS 1/4-20 X 5.
ISSUE:2 1-13-41
3/8-16 WAS 1/4-20
#10 x 1½ WAS #14 x 1¾
ISSUE:3 2-4-41

NOTES:-

1. H.F. HORN IS MOUNTED ON TOP OF LU-2020 CRADLE (SEE FIG. 1) BY SECURING HORN EARS TO EYE BOLTS WITH TWO 5/16 x 1¼ LONG BOLTS.
2. AFTER THE FINAL PHASING RELATION IS ESTABLISHED, LU-2020 CRADLE SHALL BE FIRMLY SECURED TO LU-2019, WHICH IN TURN IS SECURED TO SN-946 WITH NAILS.
3. THE THROAT OF H.F. HORN IS SUPPORTED BY SN-966 WHICH IS TO BE CUT TO HEIGHT REQUIRED BY THE FINAL VERTICAL ANGLE OF THE HORN THEN FIRMLY TOE NAILED TO CRADLE.

LU-1039 WINGS			
DETAIL	REQ.	DETAIL	REQ.
SN-945	1	SN-962	4
" -946	3	" -963	4
" -948	2	" -964	4
" -966	1	LU-2020	1

ASSOCIATED ITEMS

LU-1039 WINGS
ASSEMBLE TO LU-1015 HORN
ASSEMBLY

INTERNATIONAL PROJECTOR CORPORATION
90 GOLD STREET NEW YORK

DR. JLS CHK. APP'D | WD-135

Printed in U.S.A.

WD-133

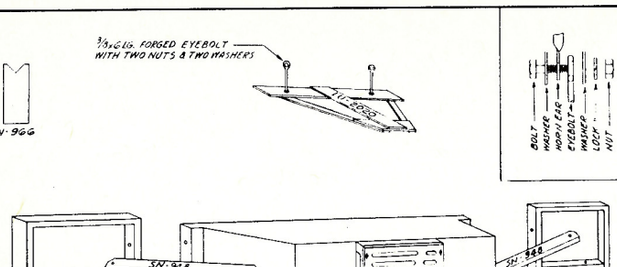

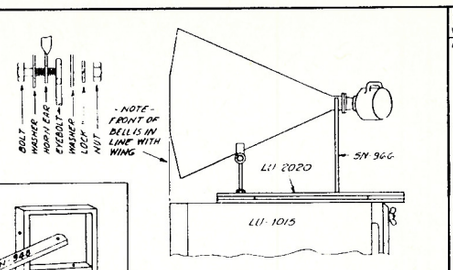

FIG. 1
(SEE NOTE 1)

ISSUE: 12-14-38
1/4-20 X 6 BOLT
W.AS 1/4-20 X 5.
ISSUE: 2 1-13-41

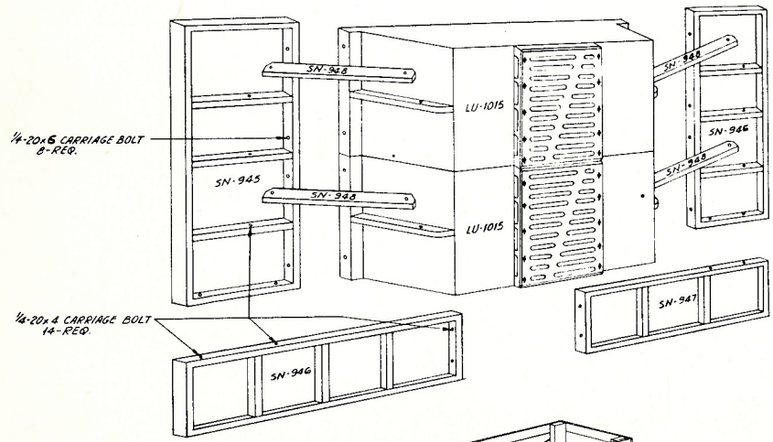

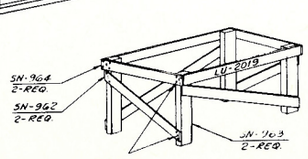

LU-2019 STAND IS ASSEMBLED AS SHOWN WITH #14 x 1 3/4 LONG WOOD SCREWS.

NOTE:

1. M.F. HORN IS MOUNTED ON TOP OF LU-2020 CRADLE (SEE FIG. 1) BY SECURING HORN EARS TO EYE BOLTS WITH TWO 5/16 x 1 1/4 LONG BOLTS.
2. AFTER THE FINAL PHASING RELATION IS ESTABLISHED, LU-2020 CRADLE SHALL BE FIRMLY SECURED TO LU-1015 WITH NAILS.
3. THE THROAT OF H.F. HORN IS SUPPORTED BY SN-966 WHICH IS TO BE CUT TO HEIGHT REQUIRED BY THE FINAL VERTICAL ANGLE OF THE HORN THEN FIRMLY TOE NAILED TO CRADLE.

LU-1040 WINGS	
DETAIL	REQ.
SN-945	1
" -946	2
" -947	1
" -948	4
" -966	1
" -962	2
" -963	2
" -964	2
LU-2020	1

ASSOCIATED ITEMS

LU-1040 WINGS
ASSEMBLE TO LU-1015 HORNS.
ASSEMBLY
INTERNATIONAL PROJECTOR CORPORATION
90 GOLD STREET NEW YORK
WD-133

Printed in U.S.A.

ALTEC SERVICE CORP.
Simplex
LU-1040 Wings
40.22

WD-130

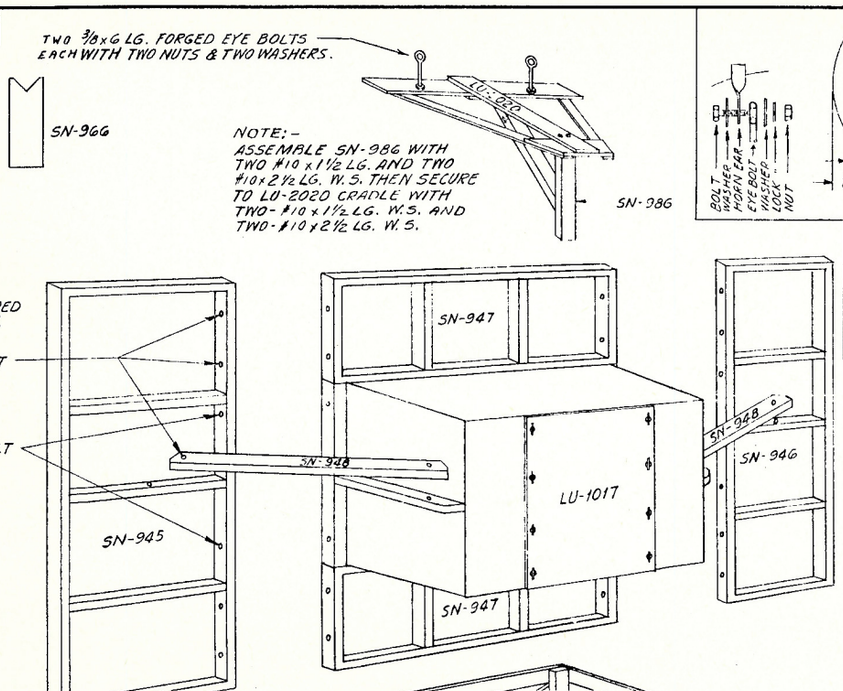

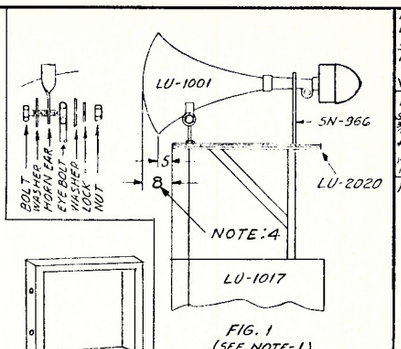

FIG. 1
(SEE NOTE-1)

REDRAWN FROM ISSUE-1 DUE TO CHANGES IN LU-2019 & LU-2020

ISSUE:2 10-14-38
1/4-20×6 BOLT WAS 1/4-20×5.

ISSUE:3 1-13-41
SN-957 & SN-965 REMOVED
3/8-16 WAS 1/4-20
#10-1½ WAS #14-1¾" ALL WOOD SCREWS #10 WERE #14
NOTE:4 ADDED

ISSUE:4 2-4-41

NOTES:-

1. H.F. HORN IS MOUNTED ON TOP OF LU-2020 CRADLE (SEE FIG.1) BY SECURING HORN EARS TO EYE BOLTS WITH TWO 5/16×1¼ LONG BOLTS.
2. AFTER THE FINAL PHASING RELATION IS ESTABLISHED, LU-2020 CRADLE SHALL BE FIRMLY SECURED TO SN-947 WITH NAILS.
3. THE THROAT OF H.F. HORN IS SUPPORTED BY SN-966 WHICH IS TO BE CUT TO HEIGHT REQUIRED BY THE FINAL VERTICAL ANGLE OF THE HORN THEN FIRMLY TOE NAILED TO CRADLE.
4. DIMENSIONS SHOWN APPLY TO LU-1060 HF UNIT. FOR LU-1000 HF UNIT, DIMENSIONS ARE 2" LESS:-NAMELY, 6"&3".

LU-1041 WINGS

DETAIL	REQ.
SN-945	1
" -946	1
" -947	2
" -948	2
" -966	1
" -962	2
" -963	2
" -964	2
" -986	1
LU-2020	1
	1

ASSOCIATED ITEMS

LU-1041 WINGS
ASSEMBLE TO LU-1017 HORN
ASSEMBLY

INTERNATIONAL PROJECTOR CORPORATION
90 GOLD STREET NEW YORK

DR. JLS CHK.
APP'D

WD-130

Printed in U.S.A.

ALTEC SERVICE CORP.
SIMPLEX

LJ-1041 Wings
40.22

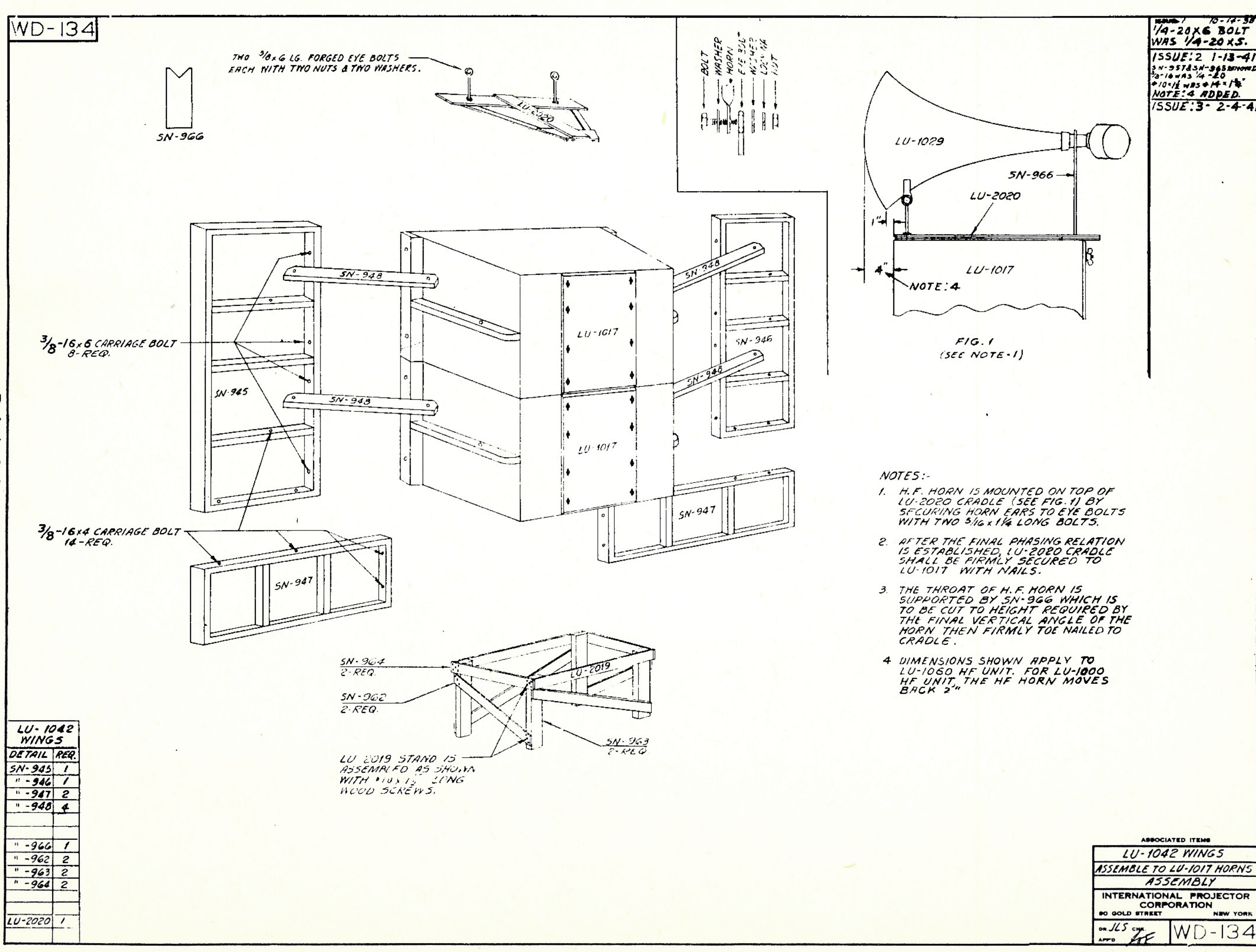
WD-134
1/4-20X6 BOLT WAS 1/4-20X5.
ISSUE:2 1-13-41
NOTE:4 ADDED.
ISSUE:3 2-4-41
TWO 3/8x6 LG. FORGED EYE BOLTS EACH WITH TWO NUTS & TWO WASHERS.
SN-966
BOLT
WASHER
HORN
EYE BOLT
LU-2020
NUT
LU-1029
SN-966
LU-2020
LU-1017
NOTE:4
FIG. 1
(SEE NOTE-1)
3/8-16x6 CARRIAGE BOLT 8-REQ.
3/8-16x4 CARRIAGE BOLT 16-REQ.
SN-948
SN-945
SN-947
LU-1017
SN-946
SN-964 2-REQ.
SN-962 2-REQ.
SN-963 2-REQ.
LU-2019
LU-2019 STAND IS ASSEMBLED AS SHOWN WITH LONG WOOD SCREWS.
NOTES:-
1. H.F. HORN IS MOUNTED ON TOP OF LU-2020 CRADLE (SEE FIG. 1) BY SECURING HORN EARS TO EYE BOLTS WITH TWO 5/16 x 1¼ LONG BOLTS.
2. AFTER THE FINAL PHASING RELATION IS ESTABLISHED, LU-2020 CRADLE SHALL BE FIRMLY SECURED TO LU-1017 WITH NAILS.
3. THE THROAT OF H.F. HORN IS SUPPORTED BY SN-966 WHICH IS TO BE CUT TO HEIGHT REQUIRED BY THE FINAL VERTICAL ANGLE OF THE HORN THEN FIRMLY TOE NAILED TO CRADLE.
4. DIMENSIONS SHOWN APPLY TO LU-1060 HF UNIT. FOR LU-1000 HF UNIT, THE HF HORN MOVES BACK 2"
LU-1042 WINGS
DETAIL REQ.
SN-945 1
" -946 1
" -947 2
" -948 4
" -966 1
" -962 2
" -963 2
" -964 2
LU-2020 1
ASSOCIATED ITEMS
LU-1042 WINGS
ASSEMBLE TO LU-1017 HORNS
ASSEMBLY
INTERNATIONAL PROJECTOR CORPORATION
90 GOLD STREET NEW YORK
WD-134

WC-1095

ISSUE 1 11-14-49
ADDED SHIELD TO INPUT WIRE FROM INPUT J1 TO MONITOR AMPLIFIER CONNECTING STRIP TO J4
DWN. | APP.
ISSUE 2 1-3-50
CORRECTED L1 TO CONFORM TO PC-2226
A.D. | APP.
ISSUE 3 3-17-50

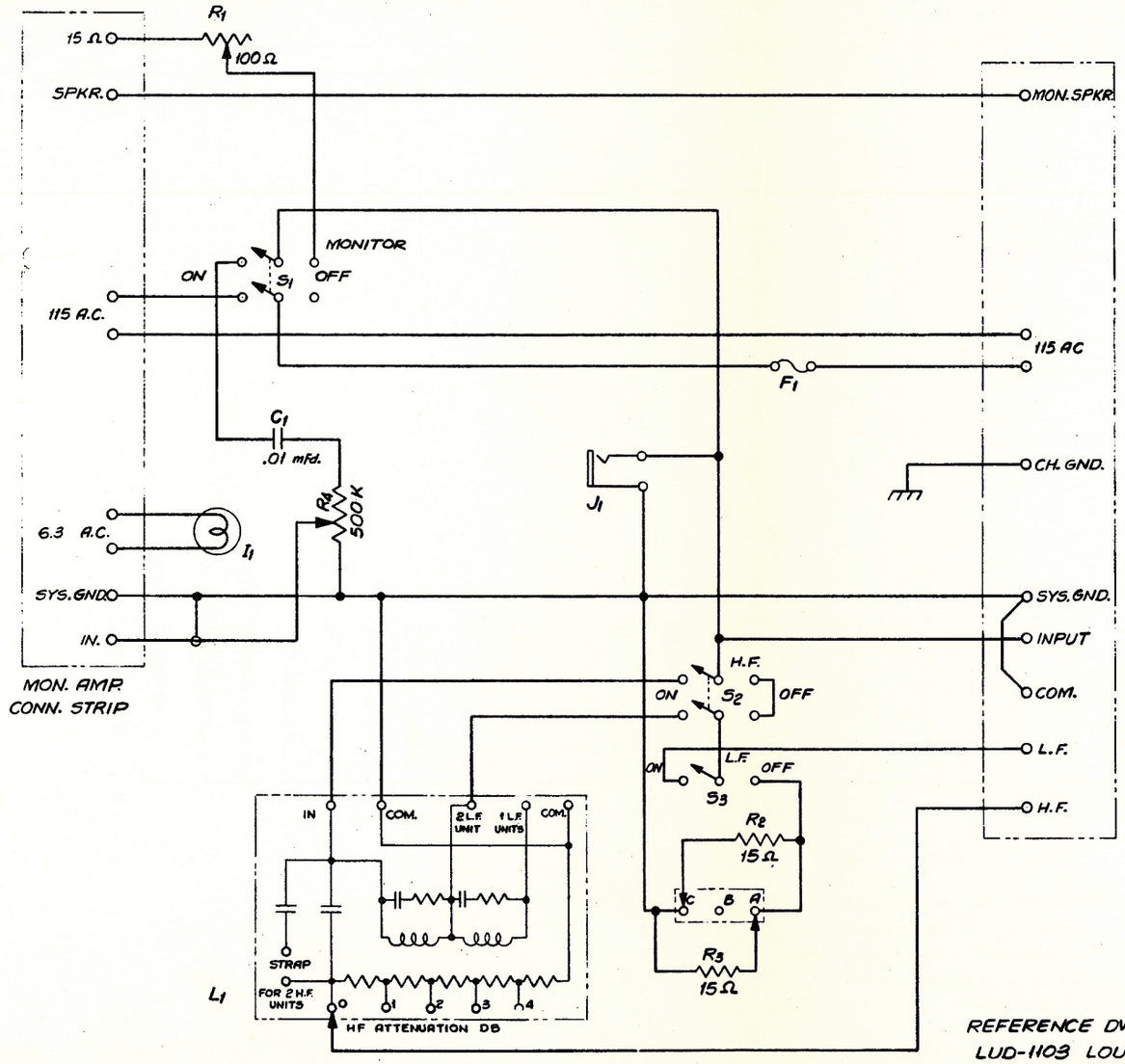

SYMBOL	I.P.C. PT. Nº	DESCRIPTION
R_1	PA-2646	RESISTOR, 100Ω, 10W., WIREWOUND.
R_2	2222	" , 15Ω, 50W., "
R_3	2222	" , 15Ω, 50W., "
R_4	2229	" , 500K, 2 W., POTENTIOMETER
C_1	2058	CAPACITOR, .01 mfd., 600V., TUBULAR, PAP.
F_1	2592	FUSETRON, 1 AMP.
I_1	2425	DIAL LAMP 6-8 V.
L_1	PC-2226	DIVIDING NETWORK
J_1	PA-2227	JACK-TWO CONDUCTOR
S_1	2427	TOGGLE SWITCH D.P.D.T.
S_2	2427	" " D.P.D.T.
S_3	2427	" " D.P.D.T.

REFERENCE DWGS.
LUD-1103 LOUDSPEAKER NETWORK
WD-1096 WIRING DIAGRAM

UNLESS OTHERWISE SPECIFIED
REMOVE ALL BURRS BREAK SHARP CORNERS
TOLERANCES OF ALL FRACT. DIM. TO BE ± 1/64
TOLERANCES OF ALL DECIMAL DIM. TO BE ± .005

SCALE

SCHEMATIC
SPEAKER NETWORK

INTERNATIONAL PROJECTOR CORPORATION
88 LA FRANCE AVENUE
BLOOMFIELD NEW JERSEY

DR. A.D. CH'K. APP'D.

PRODUCT CLASS F

WC-1095

WD-1096

ISSUE 1 11-14-49
#24 WIRE BLK #22 WIRE OR #20 (2 PLACES) ADDED SHIELD FROM #17 WIRE TO SYS. GND. ON TERMINAL BOARD #12 BLK. WIRE DISCONNECTED FROM GND.
APPR. [illegible]
ISSUE:2 1-6-50

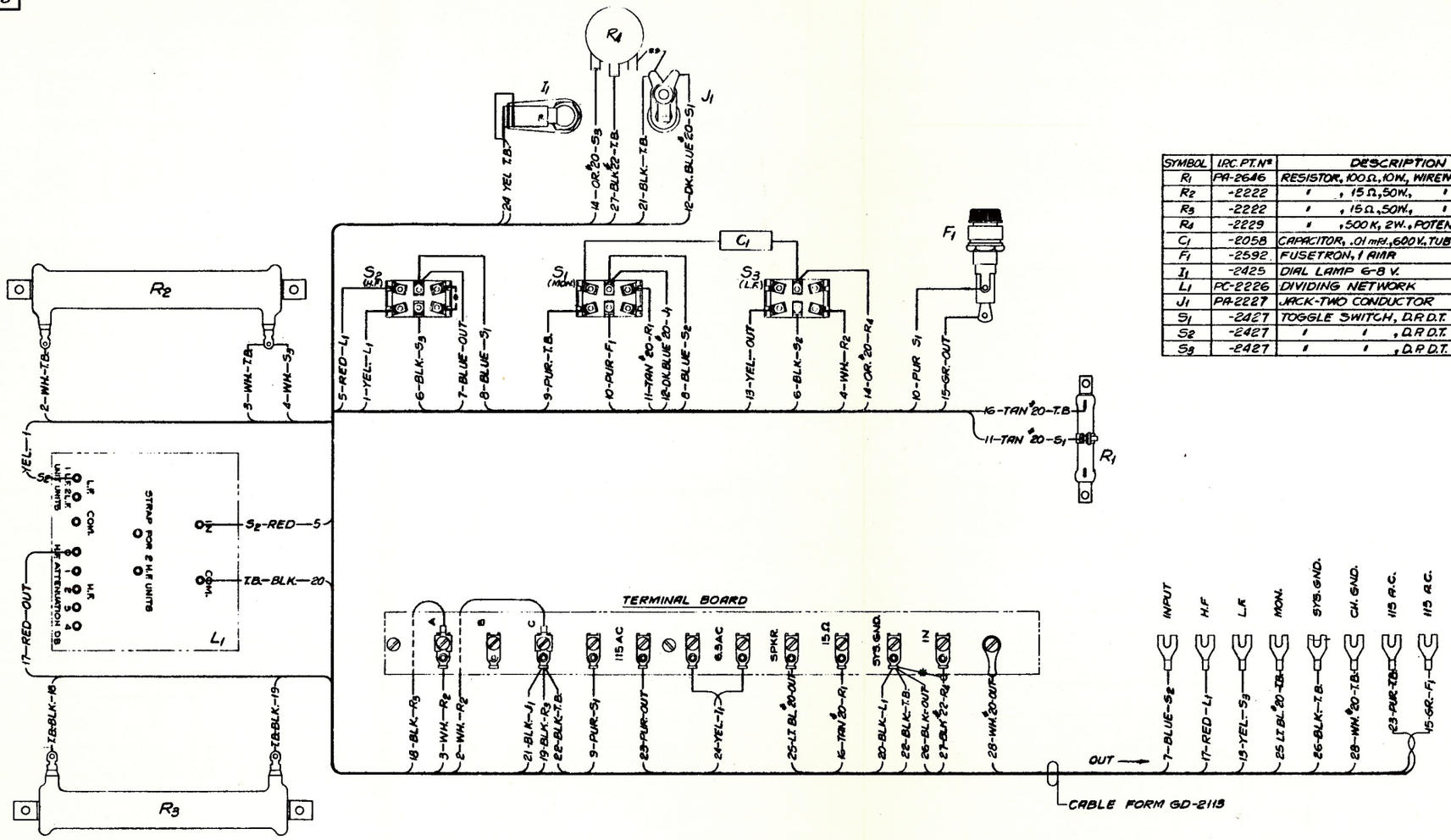

SYMBOL	I.R.C. PT. Nº	DESCRIPTION
R1	PA-2646	RESISTOR, 100Ω, 10W, WIREWOUND
R2	-2222	" , 15Ω, 50W, "
R3	-2222	" , 15Ω, 50W, "
R4	-2229	" , 500K, 2W., POTENTIOMETER
C1	-2058	CAPACITOR, .01 mfd., 600V., TUBULAR, PAPER.
F1	-2592	FUSETRON, 1 AMP.
I1	-2425	DIAL LAMP 6-8 V.
L1	PC-2226	DIVIDING NETWORK
J1	PA-2227	JACK-TWO CONDUCTOR
S1	-2427	TOGGLE SWITCH, D.P.D.T.
S2	-2427	" " , D.P.D.T.
S3	-2427	" " , D.P.D.T.

ALL WIRES ARE Nº 18 A.W.G., UNLESS OTHERWISE SPECIFIED.
ALL WIRES ARE TABULATED ON CABLE FORM DWG.
DESIGNATIONS TO COMPONENTS MARKED 'T.B.' INDICATE WIRES GOING TO TERMINAL BOARD.
** EW-692 WIRE COVERED WITH EW-949 SLEEVING
COVER CAPACITOR LEADS WITH EW-949.
* EW-692 SOLID TINNED COPPER WIRE

REFERENCE DWGS. — LUD-1103 LOUDSPEAKER NETWORK
WC-1095 SCHEMATIC

UNLESS OTHERWISE SPECIFIED
REMOVE ALL BURRS BREAK SHARP EDGES
TOLERANCES OF ALL FRACT. DIM. TO BE ± 1/64
TOLERANCES OF ALL DECIMAL DIM. TO BE ± .005

SCALE
DRAWN 6-27-49
WIRING DIAGRAM
SPEAKER NETWORK
INTERNATIONAL PROJECTOR CORPORATION
96 LA FRANCE AVENUE
BLOOMFIELD NEW JERSEY
DR. A.D. CH'K. APPR.
PRODUCT CLASS
WD-1096

Issued by
Engineering Department
Printed in U.S.A.

1. DESCRIPTION - The individual speaker furnished consists of a 6" permanent magnet (Alnico 5) cone type unit in an aluminum housing, containing a volume control and provided with rubber covered handles and a Tirex Cable.

1.1 Two of these units are permanently connected to screw type terminals inside a junction box on the upper end of a pipe stanchion that is located between every two cars. An open ended housing, for weather protection, is fastened above the junction box. When the speakers are not in use, they hang on hooks in the housing. The car occupant transfers the speaker from the housing to the inside of his car and adjusts the volume as required. The pipe stanchion is positioned so that the car occupant may transfer the speaker from the housing to his car at the beginning of the show and back to the housing at the end of the show without leaving his car.

1.2 Speaker V.C. - Impedance 3.2 ohms. Matching Transformer (1 for 2 speakers). - Primary Impedance 1125 ohms. - Secondary impedance 1.6 ohms.

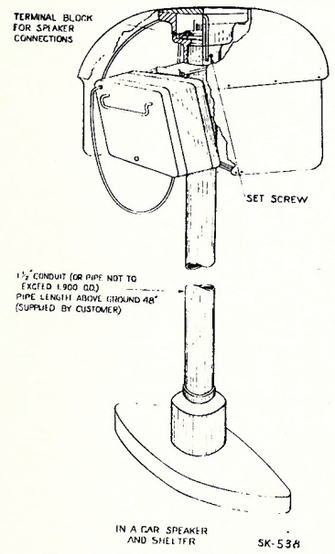

IN A CAR SPEAKER AND SHELTER SK-538

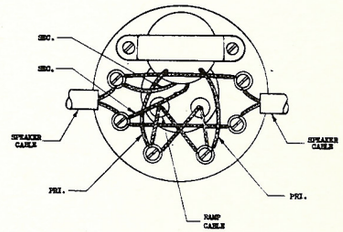

TERMINAL BLOCK CONNECTIONS IN-A-CAR SPEAKER SK-557

Issued by
Engineering Department
Printed in U. S. A.

Issue #1
December 15, 1946

0. ABSTRACT

0.1 To provide data regarding volume controls in Simplex In Car Speakers.

1. GENERAL

1.1 The following list gives code numbers and a partial description of Volume Controls used on Simplex In Car Speakers:

CODE NUMBER	
PA-2944	Used on 1950 Type A (4") speakers. Die cast metal knob. 35 ohms. May be used to replace "L" pad type on early speakers.
PA-2852	Used on all 1950 Type B (3-1/2") speakers. Medium straight knurl shaft. No knob. 35 ohms.
PA-3018	To be used on 1951 Type A (4") speakers. Plastic control knob. 35 ohms. Not interchangeable with either PA-2944 or PA-2852, or FPA-1309.
FPA-1309 ..... (Clarostat #43)	Used on all 4" speakers made up to and including 1949. "L" pad.

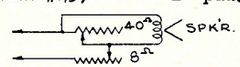

"L" PAD

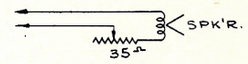

35 OHM SERIES TYPE

2. REPLACEMENTS

2.1 International Projector Corporation advises that they are preparing to furnish a substitute Volume Control for use as follows, on Drive-In Speakers:

VOLUME CONTROL CODE NUMBER	
PA-3078	Replacing PA-2944 Volume Control now used in LU-3021 and LU-3022 Speakers
PA-3078	Replacing PA-1309 Volume Control now used in LU-3002, LU-3004, 3006, 3007, 3008, 3009, 3012 and 3013 Speakers.

2.2 There are no wiring changes involved in the replacement of PA-2944 Volume Control.

2.3 The wiring changes involved in the replacement of the PA-1309 Volume Control are shown in the accompanying sketches.

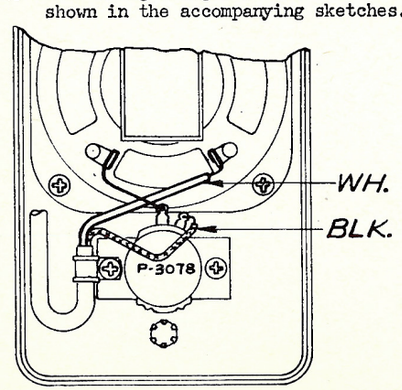

Fig. 1 2 WIRE SPEAKERS

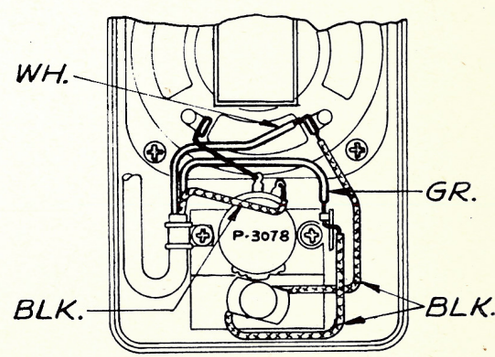

Fig. 2 3 WIRE SPEAKERS

Issued by
Engineering Department
Printed in U. S. A.

April 17, 1951
Issue #1

X-L SPEAKER EQUIPMENT

LIST OF PARTS

		X-L SOUND SYSTEMS				
		X-L2-11	X-L2-12 X-L4-12 X-L6-12	X-L4-22 X-L6-22	X-L 6-24 X-L12-24	X-L12-46
ALTEC NUMBER	I.P.C. NO. AND DESCRIPTION	SPEAKER EQUIPMENT LU-143	LU-144	LU-145	LU-146	LU-147
289	LU-1104 H.F. Unit	1	1	2	2	4
515	LU-1081 L.F. Unit	1	2	2	4	6
30337	LU-1106 L.F. Horn (Single)	1	-	-	-	-
30338	LU-1107 L.F. Horn (Double)	-	1	1	2	3
30339	LU-1108 L.F. Horn Stand	1	1	1	-	-
30280	LU-1109 H.F. Horn Sled	1	1	1	1	1
H-804	LU-1110 H.F. Horn (2 x 4)	-	-	1 or 1 or 1	-	-
H-1505	LU-1087 H.F. Horn (3 x 5)	-	-		1 or 1	-
H-1005	LU-1086 H.F. Horn (2 x 5)	1 or 1	1 or 1			-
H-805	LU-1085 H.F. Horn (2 x 4)			-	-	-
H-1504	LU-1091 H.F. Horn (3 x 5)	-	-	-	-	1 or 1
H-1804	LU-1092 H.F. Horn (3 x 6)	-	-	-	-	
30162	LU-2062 Horn Throat (Single)	1 or 1	1 or 1	-	-	-
30210	LU-2063 Horn Throat (Single)			-	-	-
30170	LU-2065 Horn Throat (Double)	-	-	1 or 1	1 or 1	2
30172	LU-2066 Horn Throat (Double)	-	-			-

NOTE: See 40.385 - Systems.

1. DESCRIPTION

1.1 An Auxiliary Loudspeaker for Cry Room or similar use with volume control may be added to any Simplex XL Sound System.

The following equipment is required:

1 LU-142 Monitor Loudspeaker
1 AM-1053 Volume Control, consisting of -

1 P-3131 Dial Plate Monitor
1 P-3132 Dial Plate Auxiliary Loudspeaker
2 P-2183 Knobs
2 P-1859 Nuts
2 P-3130 Volume Controls (15 ohm)

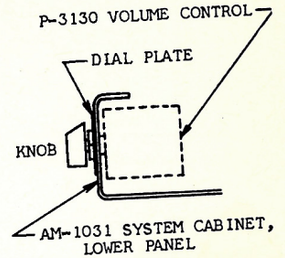

FIGURE 1

2. INSTALLATION

2.1 Auxiliary Loudspeaker

The LU-142 Monitor Loudspeaker should be installed in the desired location, in such a manner that sound is audible throughout the area.

2.2 Volume Controls

The two P-3130 Volume Controls should be installed in the bottom of the AM-1031 Cabinet in place of the left and right apparatus blanks per Figure 1 and connections made per Figure 2.

3. OPERATION

3.1 The P-3130 Volume Controls regulate the volume of the Projection Room Monitor, and the Auxiliary Loudspeaker respectively. The Network Panel Volume Control is in the input of the Monitor Amplifier, adjusts the volume of the above speakers simultaneously, and should be set permanently so that the monitor and auxiliary speaker volumes are adequate with their respective volume controls in approximately 2/3 maximum volume position. Volume adjustment should be made thereafter by means of the P-3130 Volume Controls.

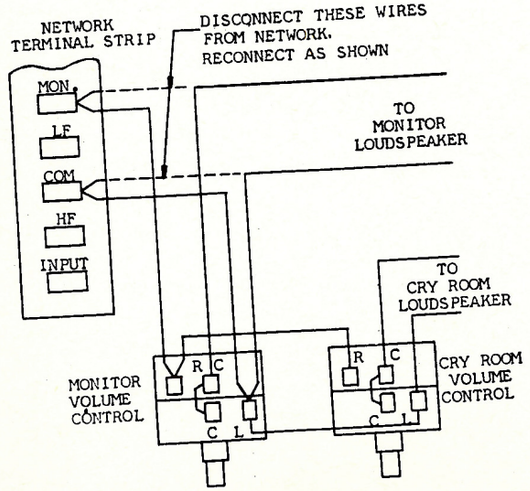

FIGURE 2-A WIRING DIAGRAM

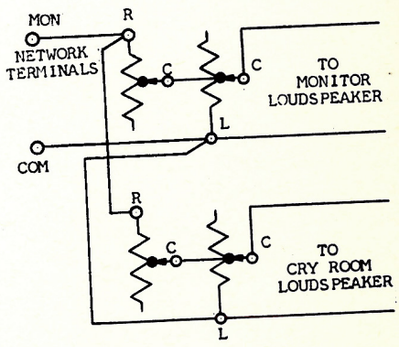

FIGURE 2-B SCHEMATIC

ISSUE	APP'D
1 1-4-50	

NOTES ~
1 ~ ALL WIRES ARE #16 AWG, 26 STRANDED, TINNED COPPER, .019 VINYLITE COVERED, .097 ± .002 OUTSIDE DIA. COLOR CODE AS SHOWN (PLASTOID CORP OR EQUIV.). 80° C.
2 ~ ALL JOINTS SHALL BE FREE FROM EXCESS SOLDER OR ROSIN.
3 ~ WIRES SHALL BE CABLED WHERE POSSIBLE USING #6 LACING TWINE TO OBTAIN NEAT & WORKMANLIKE APPEARANCE.

WHITE
BROWN
YELLOW
GRAY
ORANGE
RED
GR. BLACK
GR. RED
GR. WHITE
GR. BLUE
GR. BROWN
WH. BLACK
BLACK
1 2 3 4 5 6 7 8 9 10 11 12
CH. GND.
OUT 1
OUT 2
3
4
MON
BL'K.
TS2
FRONT VIEW
WH. RED
WH. BLUE
YEL. BLACK
GREEN
YEL. RED
YEL. BLUE
CABLE 12" LG.
SWITCHES ARE SHOWN IN OFF POSITION
T1
8A
50A
TS1
S4 S5 S6 S10 S11 S12
R4 R5 R6 R10 R11 R12
P1
R13
WH. RD.
GR. WH.
GR. RD.
GR. BL'K.
YEL. BL.
YEL. RD.
YEL.
BRN.
WH.
WH. BL.
WH. BLK.
GR. BL.
GR. BL.
YEL. GR.
YEL. BL'K.
RD.
OR.
GRAY
OFF
S13
1 2 3 4
S1 S2 S3 S7 S8 S9
R1 R2 R3 R7 R8 R9
BL'K.
TOP OF PANEL
REAR VIEW
TOP OF PANEL

APP'D	DRAWN BY
DATE 1-4-50	SORENSEN DATE 12-30-49

ALTEC SERVICE CORP. N.Y.

AS-2189

WIRING DIAGRAM
LU-3017 PANEL ASSEMBLY

Issued by
Engineering Department
Printed in U.S.A.

ALTEC SERVICE CORPORATION
SIMPLEX

LU-3017 Monitor Volume
Ramp Control Panel

ISSUE: 1 6-19-50

LU-3017 MONITOR VOLUME-
RAMP CONTROL PANEL
SCHEMATIC
INTERNATIONAL PROJECTOR CORPORATION
55 LA FRANCE AVENUE BLOOMFIELD NEW JERSEY
DR. CH'K. APP'D.
IB-2224

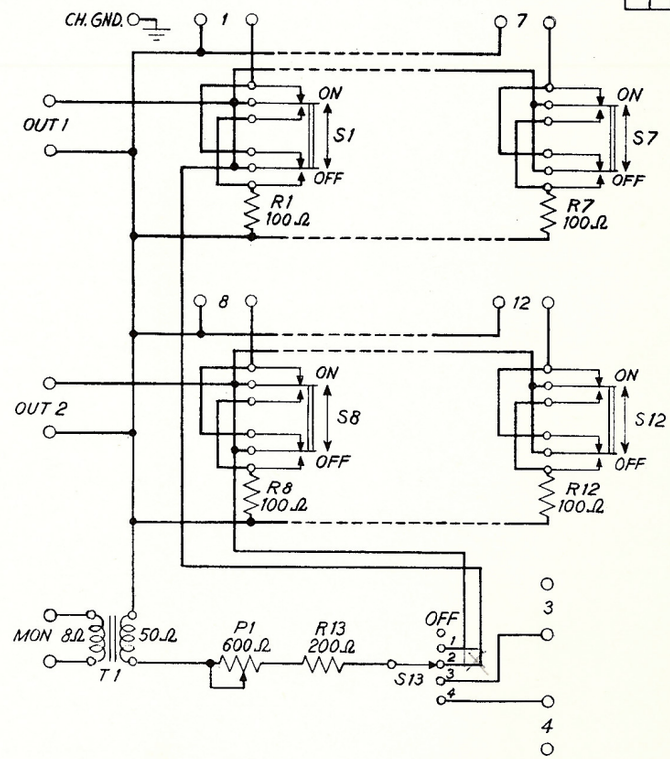

PARTS LIST		
SYM	ITEM	DESCRIPTION
P1		POTENTIOMETER MALLORY M-600-P
R1-12		RESISTOR OHMITE 0368 100Ω 25W
R13		RESISTOR OHMITE 1014 200Ω 10W
S1-12		SWITCH MOSSMAN 044T2 TURN
S13		SWITCH MALLORY 1315L
T1		TRANSFORMER A.L.C. 50:8Ω MATCHING

Issued by Engineering Department
Printed in U.S.A.

ISSUE		APP'D
1	1-4-50	
WH.BN. WAS WH.BLK		
2	2-6-50	

APP'D [illegible] DATE 1-4-50

DRAWN BY SORENSEN DATE 1-4-50

ALTEC SERVICE CORPORATION NEW YORK

AS-2190

WIRING DIAGRAM

LU-3018 PANEL ASSEMBLY

NOTES —

1 ~ ALL WIRES ARE #16 AWG., 26 STRANDED, TINNED COPPER, .019 VINYLITE COVERED, .097 ± .002 OUTSIDE DIAM.. COLOR CODE AS SHOWN. (PLASTOID CORP. OR EQUIV.) 80°C.

2 ~ ALL JOINTS SHALL BE FREE FROM EXCESS SOLDER OR ROSIN.

3 ~ WIRES SHALL BE CABLED WHERE POSSIBLE USING #6 LACING TWINE TO OBTAIN NEAT & WORKMANLIKE APPEARANCE.

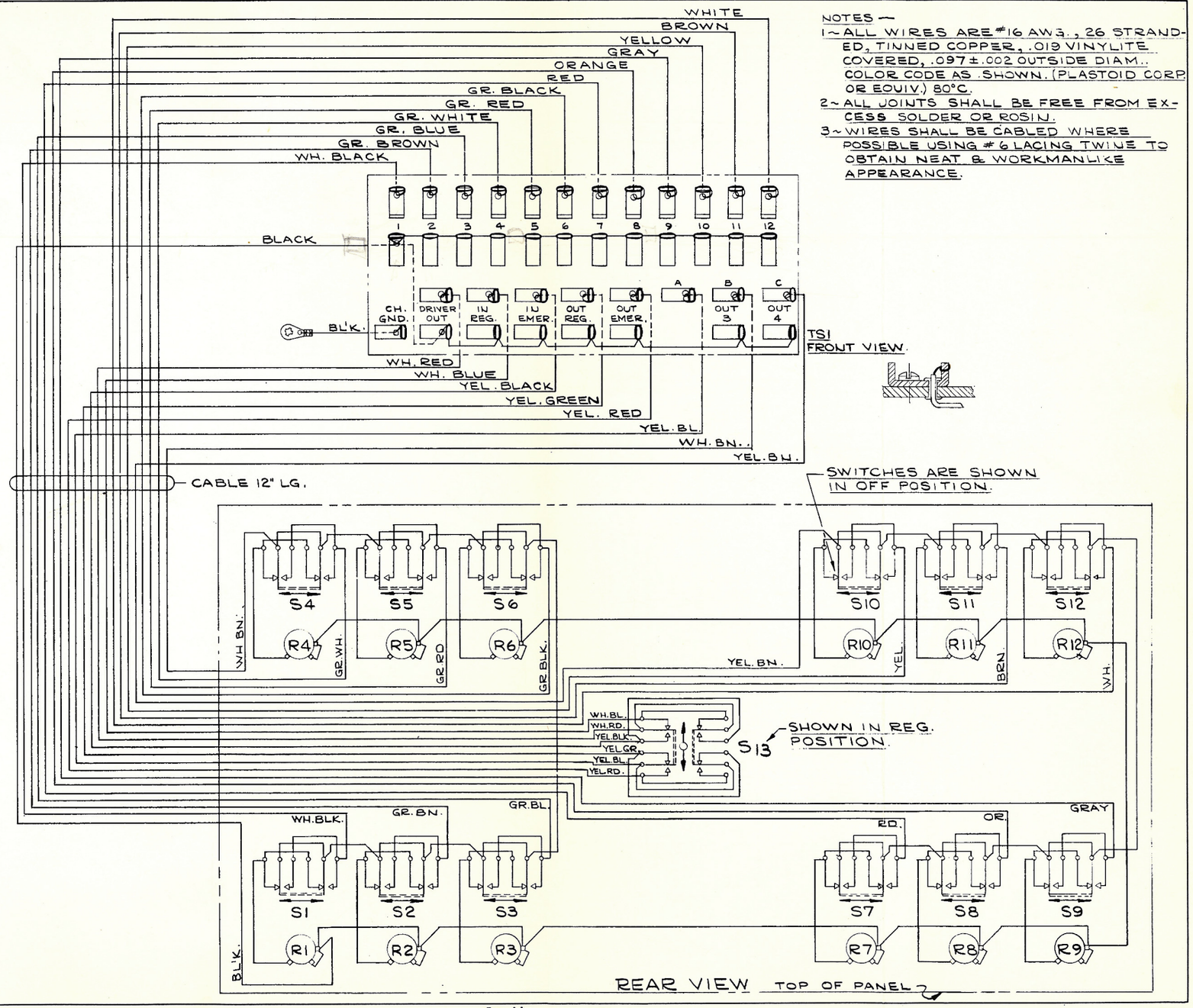

Issued by
Engineering Department
Printed in U.S.A.

ISSUE: 1 6-19-50

LU-3018 AMPLIFIER SELECTOR-
RAMP CONTROL PANEL
SCHEMATIC
INTERNATIONAL PROJECTOR CORPORATION
55 LA FRANCE AVENUE BLOOMFIELD NEW JERSEY
DR. CH'K. APP'D.
IB-2225

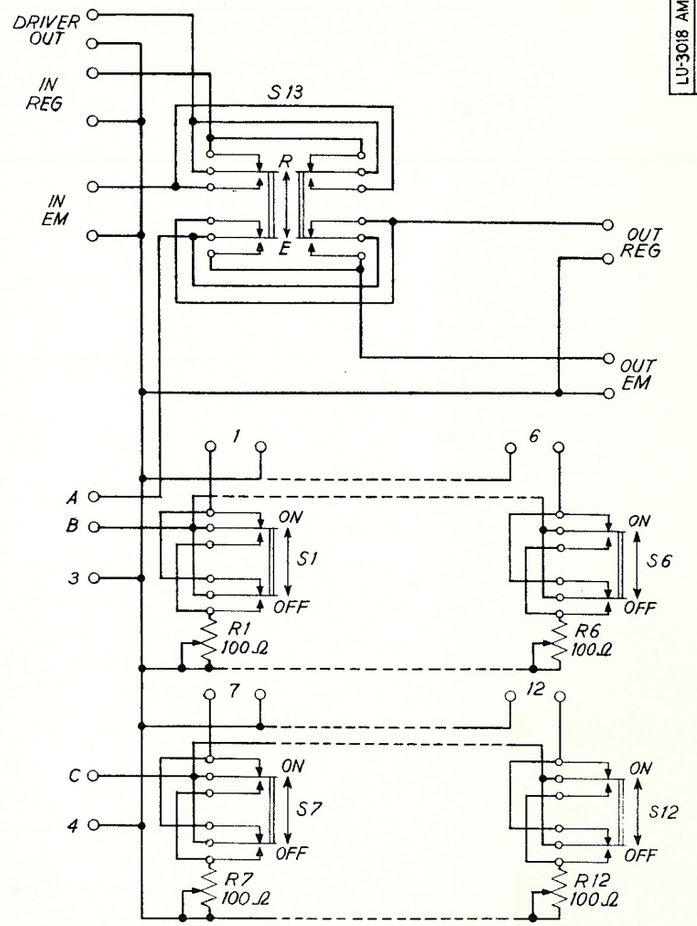

PARTS LIST

SYM	ITEM	DESCRIPTION
R1-12		RESISTOR OHMITE 0368 100Ω 25W
S1-12		SWITCH MOSSMAN 044 T2 TURN
S13		SWITCH G.C., MCM

Issued by Engineering Department
Printed in U.S.A.

1. DESCRIPTION.

Type	-	Chassis type. All AC. Full wave rectifier and AC emergency supply.
Tubes	-	2 SN 941 (G.E. 277465) Tungar Bulbs.
Ballast Lamp	-	1 SN 723 (Amperite 41-7 type).
Output	-	DC - 4 amp 9 volts (ripple voltage 1% max.) for exciter lamp supply. AC - 2 Volts for preheat & 9 volts for AC emergency exciter lamp supply.
Power Supply	-	100 - 130 V 50 - 60 cycles AC - 250 Watts.
Fusing	-	One SN-594 (1 amp) and one SN-605 (3.2) Fusetron.
Dimensions	-	9" High x 17" wide x 10" Deep.
Weight	-	65 lbs.
Accessories	-	Equipped with "Rec" - "AC" Switch for switching to emergency output.
Associated Dwg.	-	WD-123 Schematic & Wiring Diagram.

2. INSTALLATION.

The PU-1000 should be installed in the AM-2023 or AM-2033 Cabinet in the location shown on the system conduit layout drawing. External connections to the terminal strips should be made in accordance with the system wiring diagram.

CAUTION:- The three wires to the AM-101 Volume Control Amplifier must be twisted tightly. Do not operate the power unit without the exciter lamps installed, as the shunt resistor in the power unit may become damaged and make replacement necessary.

A. Power Transformer Connection. Transformers T_1 and T_2 have "125 V", "115 V" and "105 V" taps. Connections should be made to these taps as follows (See WD-123):-

Average Line Voltage	Connect to T_1 and T_2 Taps
120 - 130	125 V (Connection as shipped)
110 - 120	115 V
100 - 110	105 V

B. Adjustment of DC Exciter Lamp Current. It is important that the adjustments to obtain 4 ampere DC exciter lamp current be made carefully in accordance with the following procedure. The ballast lamp is designed for 4 amperes and, to maintain this current within the range of 7 to 13 volts drop across the lamp. So that the ballast lamp may compensate for both increase and decrease in line voltage, the normal drop should be adjusted near the middle of the lamp's operating range, approximately 10 volts. Reasonable care must be exercized in the selection of the "normal" ballast lamp voltage drop in order that extreme increases in line voltage will not cause the lamp to operate at or above its maximum voltage limit. Such a condition will shorten the lamp's life, and in some instances may destroy its regulating properties by open-circuiting parts of its multi-filament structure. It is therefore important that line voltage variations be carefully observed over a typical operating day, and the power unit adjustments made so that overload conditions will not be encountered.

Transformer T_2, which supplies the rectifier circuit, is provided with four secondary taps, each succeeding tap from 1 to 4 representing approximately 3 volts increase in secondary voltage. In order that the ballast lamp and rheostats will absorb a minimum of power, use the lowest secondary tap which will give satisfactory results.

The power units are shipped with the adjustable resistors in the minimum current position so that the exciter lamp will not be damaged when the power unit is turned on initially. Before making adjustments make sure of this condition and also that transformer primaries are connected for average line voltage.

To make the adjustments, invert the power unit and proceed as follows:-

(1) In the rear left corner remove the metal strap at "A" and connect a DC Ammeter (0 - 10 scale) to the two terminals for measuring the exciting lamp current.

(2) Connect a DC Voltmeter (0 - 15 scale) to the two terminals in the rear left corner designated "V" for measuring the potential drop across the ballast lamp..

(3) Set the "AC" switch in "ON" position, the "Output" switch in "REC" position, and allow the ballast lamp to heat up and stabilize.

(4) Adjust the "series" rheostat until the current is 4 amperes.

(5) Adjust the "shunt" rheostat so that the voltage across the ballast lamp is 10 volts.

(6) Readjust the "series" and "shunt" rheostats successively as required to obtain the above readings as the adjustment of one affects the other. Since the resistance of the ballast lamp is dependent on its temperature, a minimum of ten seconds should be allowed between adjustments to permit stabilization of the ballast lamp.

Issue #1
June 18, 1941
Printed in U. S. A.

NOTE:- If the voltage across the ballast lamp, with rheostats in extreme counter-clockwise position, is more than ten volts, transfer the "low" leads from tap "3" to tap "2" or "1" as required before making adjustments 4, 5 or 6. On the other hand, if the rheostats are near the extreme clockwise position before a balance is obtained, transfer the "low" leads from tap "3" to tap "4". The current must be adjusted to 4 amperes. The voltage across the ballast lamp may be min. 9.5, max. 10.5 volts if closer adjustment is not possible.

When the final adjustments have been made, both rheostats, R_2 and R_3, should be near their extreme clockwise position. In this position the voltage drop across R_2 is a minimum and, consequently, the regulation of the exciter lamp current can be accomplished more perfectly due to the fact that the lamp represents practically the entire load. If R_3 is set at its extreme clockwise position the current through it is a minimum and, therefore, the ballast lamp is required to handle a minimum load. Proper selection of the secondary voltage tap will facilitate arriving at these desirable rheostat settings.

C. Adjustment of AC Exciter Lamp Current. To adjust the AC exciter lamp supply set the "Output" switch in "AC" position, connect an AC Voltmeter (0 - 15 scale) across "COM" and "DC" terminals in the rear left corner, and adjust "AC" rheostat R_1 until the meter reads 9 volts. Also check the "preheat" voltage (2 volts AC) by connecting the voltmeter across terminals "AC" and "COM".

D. THE EXCITER LAMP BRACKET SHOULD NOT BE REMOVED FROM THE SOUNDHEAD WHILE THE LAMP IS BEING OPERATED ON DC, SINCE REMOVING THE LOAD FROM THE POWER UNIT WILL CAUSE A VOLTAGE SURGE, WITH THE POSSIBLE RESULT OF BURNING OUT THE PILOT LAMP OR FUSE IN THE VOLUME CONTROL AMPLIFIER. However, the exciter lamp operating on standby current may be removed without damage since the transformer which supplies both the standby and operating AC current is independent of the transformer used in connection with the DC supply.

3. OPERATION.

A. Normal. Set "AC" Switch in "ON" position, and set "Output" switch in "REC" position. The tungar bulbs should normally begin to glow as soon as the "AC" switch is set in "ON" position. If one of the tubes is burned out, or "hard", the other will not start. If the tube is not burned out but the difficulty is due to a "hard" tube, the "AC" switch should be operated several times, which will in most instances start the "hard" tube. Otherwise, replacement will be necessary.

B. Emergency. Set "AC" switch In "ON" position and "Output" switch in "AC" position. The "Output" switch in this position disconnects the rectifier transformer, and the tungar bulbs are dark.

4. MAINTENANCE.

A. Tungar Bulbs. Check periodically to make sure that the bulbs are tight in their sockets, and the springs make good contact. A burned out bulb should be replaced at once as the other bulb will not carry the load. Flickering of the pilot light in the AM-101 Volume Control Amplifier is an indication of a defective bulb.

B. Ballast Lamp. The prongs should make good contact, and the prongs and socket contacts should be clean and bright. Check periodically.

C. Condensers. Check all clamping rings and nuts periodically, and tighten if necessary.

D. Exciter Lamp Current Adjustment. The exciter lamp current should be checked periodically by the method described under 2-B above, since the characteristics of the tungar bulbs, ballast lamp and exciter lamp change with age. At no time should these adjustments be made without the aid of a voltmeter and an ammeter. If ammeter is not available, a DC voltmeter may be connected across exciter lamp terminals "1" and "2" in the "ON" sound mechanism. The meter should read 8.5 volts min., 9.0 volts max. If the voltage is lower, readjust by method described under 2-B above. If readjustment is impossible, replace ballast lamp and tungar bulbs successively, and repeat adjustments.

Printed in U. S. A.

When the PU-1000 Power Unit (DC exciter lamp supply for 4 amp,9 volt lamps) and the AM-2033 Cabinet are substituted for the PU-1005 Power Unit (AC exciter lamp supply for 7.5 amp,10 volt lamps) in single or dual projector Type "E" Systems installation, operation and maintenance of the system are the same except with reference to the exciter lamp supply circuit. The differences are noted below.

1. **INSTALLATION.** (Refer to conduit layout drawing WD-155)

A. Mount the AM-2033 Cabinet in a convenient location, preferably adjacent to the AM-142 Amplifier Equipment.

B. Connect AC conduit to the AM-2033. If convenient this conduit may terminate at item 9 (AC switch) on WD-155, and be wired so that the switch controls the AC supply to the AM-142 and PU-1000.

C. In dual projector systems mount a 4" outlet box on the front wall in place of item "E" on WD-155. In single projector systems mount a 6" x 6" x 3" box, supplied by the customer, in place of item "E" on WD-155, and install the SN-982 Resistor (60 watts 5 ohms) in it. Run a 1/2" conduit from this box to the AM-2033. Omit conduit 5 from item "E" to item 9.

D. Pull wires, install PU-1000 Power Unit per paragraph "E" below and connect the exciter lamp circuit per Figure 1 or Figure 2. Other system wiring is the same as shown on WD-157.

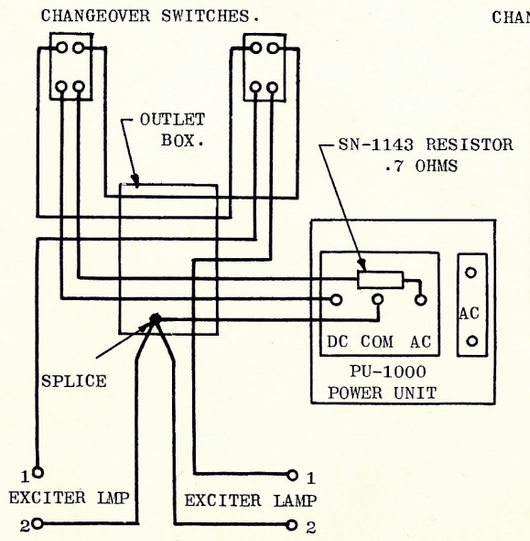

FIGURE 1. DUAL PROJECTORS

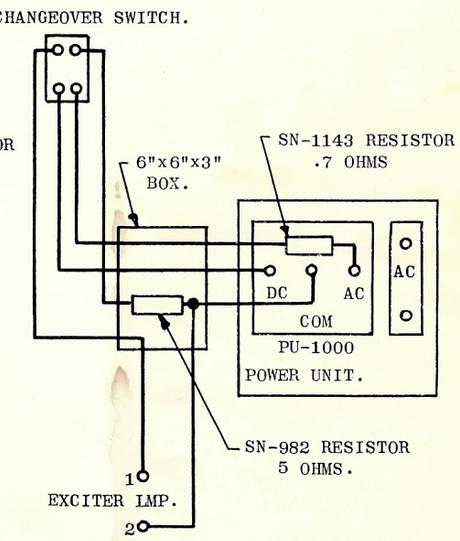

FIGURE 2. SINGLE PROJECTOR

Printed In U.S.A.

E. Install the PU-1000 Power Unit in the AM-2033 Cabinet per Equipment Instruction "AM-2033 Cabinet", connect the SN 1143 Resistor (10 watts 0.7 ohms) per Figure 3. This resistor reduces the "preheat" voltage on the "OFF" exciter lamp. Make external connections per Figure 1 or Figure 2.

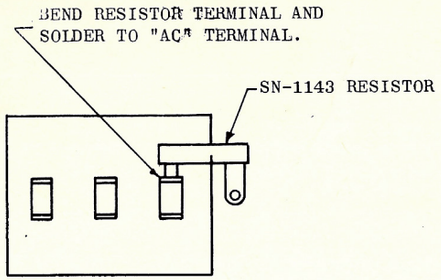

FIGURE 3.

F. Adjust the exciter lamp current per Equipment Instruction "PU-1000 Power Unit" and supplement "Adjustment of PU-1000 Power Unit".

G. Modification of AM-141 Volume Control Amplifier.

(Refer to drawing WD-158) In the AM-1010 Volume Control Amplifier strap out C_9 and L_1 per Figure 4.

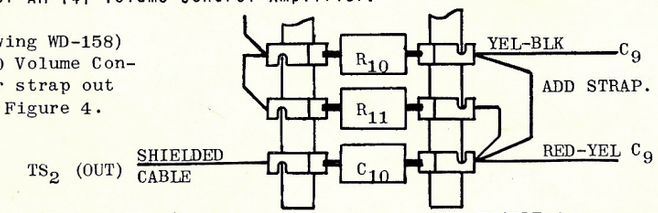

FIGURE 4.

2. OPERATION.

A. AC Power. Turn the AM-142 Amplifier Equipment and PU-1000 Power Unit "ON" and "OFF" by means of the main AC power supply switch and the "AC" switch on the PU-1000. If the PU-1000 is connected to the main AC switch, its "AC" switch may be left in "ON" position.

B. PU-1000 Power Unit. Set the "Output" switch in "REC" position. Tungar bulbs should begin to glow immediately, the exciter lamp in one sound mechanism should be bright (4 amps 9 volts) while the other exciter lamp should be dim (2 volts AC).

3. MAINTENANCE.

A. PU-1000 Power Unit. Maintain per Equipment Instruction "PU-1000 Power Unit".

Printed in U.S.A.

Simplex

PU-1000 POWER UNIT

ALTEC SERVICE CORPORATION

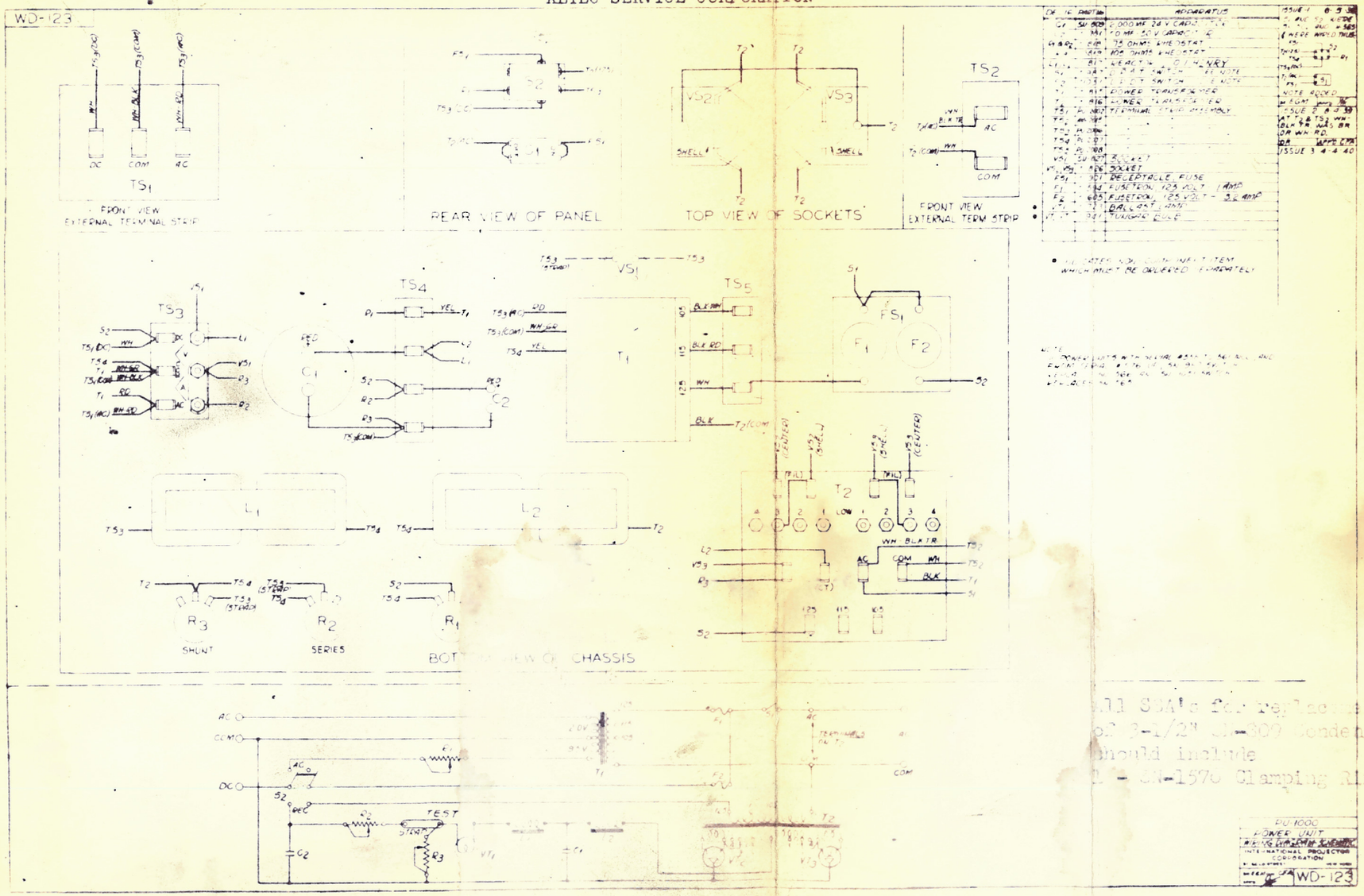

All S/A's for replacements of 3-1/2" C-309 Condenser should include 1 - SK-1570 Clamping Ring

1. DESCRIPTION

Type	- Chassis type - all A.C. Full wave rectifier.
Tubes	- Six 523 Vacuum Tubes.
Output	- Maximum of 1.4 amps. at 110 V. DC to energize the fields of 4 to 6 speakers.
Power Supply	- 100/125 Volts AC 50-60 cycles, 500 Watts.
Fusing	- One SN-1373 Fusetron (6.25 amps.).
Dimensions	- 8-1/2" high x 17" wide x 10" deep.
Weight	- 42 lbs.
Accessories	- Two terminal strips, on extension cable forms for external connections.
Associated Dwg.	- WD-182 - Wiring & Schematic.

2. INSTALLATION

The PU-1001 should be installed in an AM-2023 Cabinet in the location shown on the system conduit layout drawing. External connections to the terminal strips should be made in accordance with the system wiring diagram.

A. Power Transformer Primary Connections. Transformer T_1 has "125 V", "115 V" and "105 V" Taps. Connections should be made to these taps as follows (see WD-182):

Average Line Voltage	Connect to T_1 Taps
120 - 130	125 Volts (Connections as shipped)
110 - 120	115 Volts
100 - 110	105 Volts

Average line voltage is the average of line voltage readings taken at regular intervals during operation hours.

B. Power Transformer Secondary Connections. Secondary taps "2" and "4" are provided to maintain constant output voltage with the loud speaker field loads given below. Connections should be made to these taps per the following tabulation:

Stage Speakers	Connect to Secondary Taps	No. 523 Installed
4	2	6
6	4	6

3. OPERATION

Set "AC" switch in "ON" position. Vacuum tubes should begin to warm up immediately.

ALTEC SERVICE CORPORATION

SIMPLEX SOUND EQUIPMENT BULLETIN PU-1001 POWER UNIT

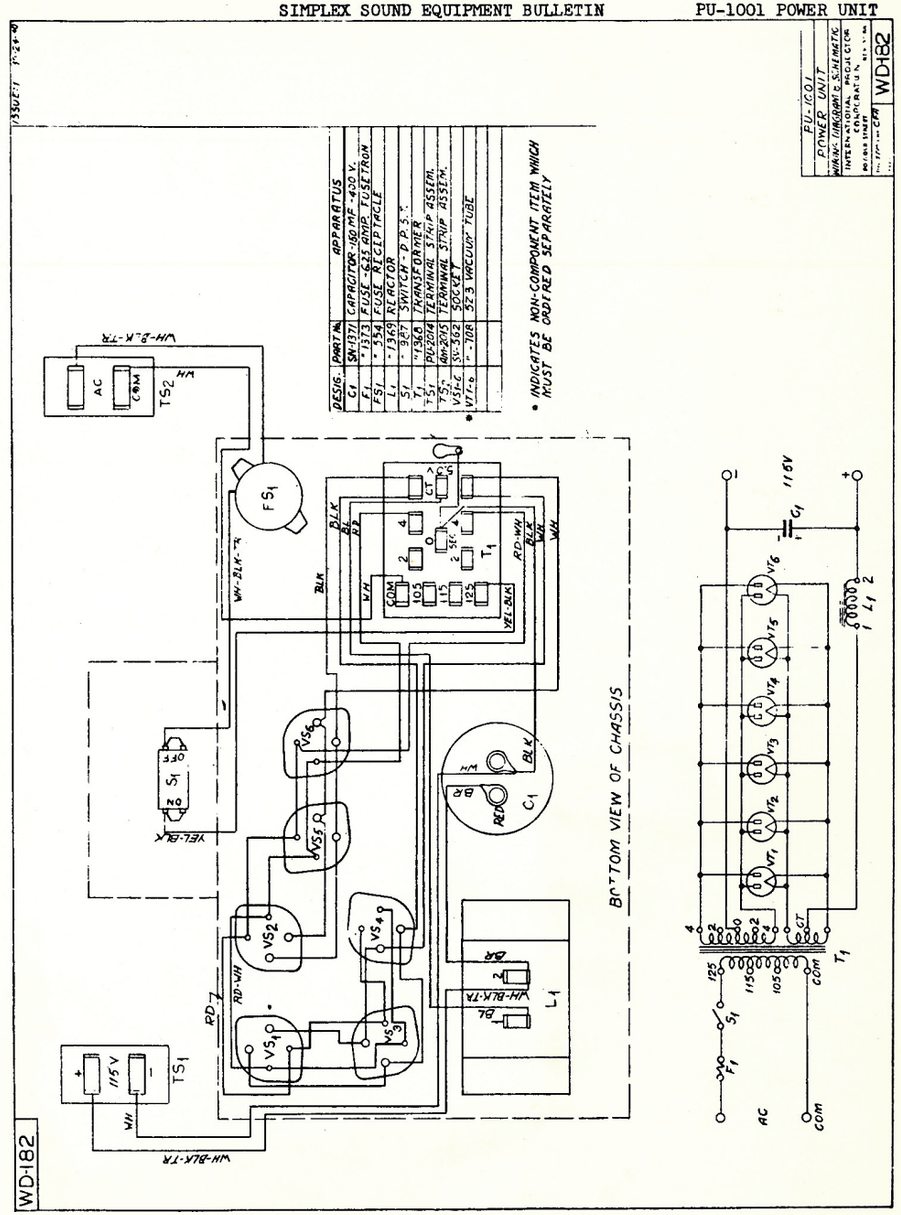

Printed in U.S.A.

1. DESCRIPTION.

Type	-	Chassis Type. All AC. Full wave rectifier.
Tubes	-	2 or 4 5Z3 vacuum tubes (See Sec. 2-B).
Output	-	Maximum of .75 Ampere at 220 V DC (maximum ripple voltage 1%) to energize the fields of 2 to 6 stage speakers.
Power Supply	-	100 - 130 V AC 50 - 60 cycles - 300 watts.
Fusing	-	One 605 (3.2 Amp) Fusetron.
Dimensions	-	8-1/2 H x 17" W x 10" D.
Weight	-	42 lbs.
Accessories	-	Supplied with two terminal strips on extension cable forms for external connections.
Associated Drawing	-	WD-140 Schematic & Wiring.

2. INSTALLATION.

The PU-1003 should be installed in the AM-2023 Cabinet in the location shown on the system conduit layout drawing. External connections to the terminal strips should be made in accordance with the system wiring diagram.

A. Power Transformer Primary Connections. Transformer T_1 has "125 V", "115 V" and "105 V" taps. Connections should be made to these taps as follows (See WD-140):

Average Line Voltage	Connect to T_1 Taps
120 - 130	125 V (Connection as shipped)
110 - 120	115 V
100 - 110	105 V

Average line voltage is the average of line voltage readings taken at regular intervals during operating hours.

B. Power Transformer Secondary Connections. Secondary taps "2" and "4" are provided to maintain constant output voltage with the loudspeaker field loads given below. Two or four 5Z3 vacuum tubes should be installed per the following tabulation.

Number Stage Speakers	Connect to Secondary Tap	Number 5Z3 Installed
2	2	2
4	4	2
6	4	4

3. OPERATION.

Set "AC" Switch in "ON" position. Vacuum Tubes should begin to warm up immediately.

4. MAINTENANCE.

A. Vacuum Tubes. Check output voltage periodically. If below 220 volts replace one vacuum tube at a time until defective tube is located. If above 227 volts check connections to transformer T_1 (see section 2) and determine whether average line voltage has changed since initial installation. The field voltage should be checked at the speaker units and should be 220 V at Speaker.

B. Capacitor. Check clamping ring and nut periodically and tighten if necessary.

Printed in U. S. A.
Issue #2
September 15, 1941

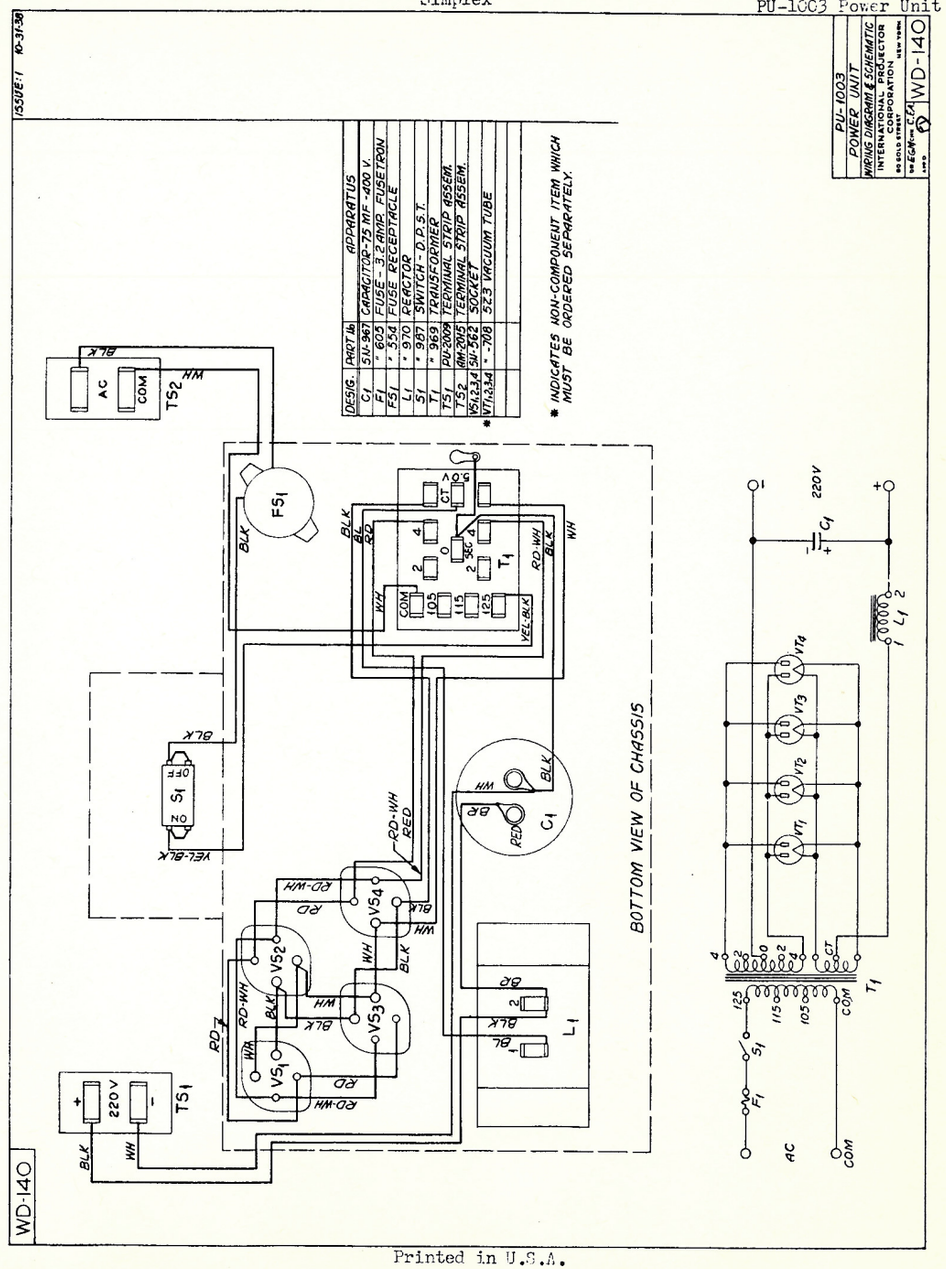
PU-1003
POWER UNIT
WIRING DIAGRAM & SCHEMATIC
INTERNATIONAL PROJECTOR CORPORATION
WD-140
DESIG. PART No APPARATUS
C1 SU-963 CAPACITOR-75 MF - 400 V.
F1 * 605 FUSE - 3 AMP. FUSETRON
FS1 * 554 FUSE RECEPTACLE
L1 * 970 REACTOR
S1 * 987 SWITCH - D.P.S.T.
T1 * 969 TRANSFORMER
TS1 PU-2009 TERMINAL STRIP ASSEM.
TS2 AM-2015 TERMINAL STRIP ASSEM.
VS1,2,3,4 SU-562 SOCKET
VT1,2,3,4 * -708 523 VACUUM TUBE
* INDICATES NON-COMPONENT ITEM WHICH MUST BE ORDERED SEPARATELY.
BOTTOM VIEW OF CHASSIS
AC
COM
TS2
FS1
T1
S1
C1
L1
TS1
220V
VS1
VS2
VS3
VS4
VT1
VT2
VT3
VT4
BLK
WH
RD
RD-WH
YEL-BLK
BR
VEL-BLK
105
115
125

1. DESCRIPTION.

A. Use. Exciter lamp supply. Consists of a step-down transformer, having six leads, in a wall mounting metal cabinet with a wiring compartment at the bottom.

B. Power. Primary, 105 - 125 volts, 50 - 60 cycles, AC.
Secondary, 7.5 amperes at 9.3 volts AC.
2.5 amperes at 0.7 volts AC.

C. Power Consumption 85 Watts.

D. Size 6-3/4" high x 5-1/4" wide x 3-7/8" deep.

E. Weight approximately 10 lbs.

2. INSTALLATION.

A. Mounting. The PU-1005 should be mounted on the front wall of the Projection Room between the two machines, in a convenient accessible location as shown on the system conduit layout.

B. External Connections should be made to the transformer, by approved splices, per the system wiring diagram and the schematic below. For maximum exciter lamp life, the primary connections should always be made to the "Red" and "White" leads unless the line voltage (steady or surge voltage) never rises above 115 volts and the system gain is, at the same time, insufficient. The unused primary lead should be taped.

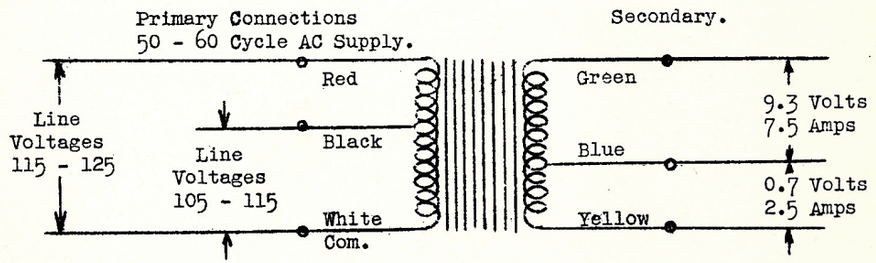

1. PU-1014 POWER SUPPLY CABINET

   a. This cabinet, designed to mount a modified PU-1011 Power Supply, replaces the PU-1012 Power Supply Cabinet in the XL101 and the XL532 and XL536 Series Sound Systems.

   b. The PU-1014 differs from the PU-1012, in which the original PU-1011 mounted, in that the two receptacles that accommodated the AM-1064 Control Units or PU-1013 Dummy Load(s) and the associated cable form have been omitted and three dummy load resistors, for plate voltage adjustment, are mounted on the terminal board.

   c. These three dummy load resistors, which eliminate the need for the PU-1013 Dummy Load(s) in these systems, should be strapped in accordance with IN-138.

   d. PU-1014 Power Supply Cabinet is now being shipped with new systems.

2. PU-1011 POWER SUPPLY

   a. The modification of this unit consists of changing R2 from 15,000 ohms to 10,000 ohms.

   b. The original PU-1011 was designed to supply plate and heater power for up to eight AM-1065 Pre-Amplifiers and two AM-1064 Control Units in the XL432 and XL436 Series Sound Systems.

   c. The XL232 and XL236 Series Sound Systems have a maximum of four AM-1065 Pre-Amplifiers and one AM-1064 Control Unit. One PU-1013 Dummy Load was supplied to adjust the plate voltage.

   d. In the XL101 System, having only two AM-1065 Pre-Amplifiers, two PU-1013 Dummy Loads were shipped for plate voltage adjustment.

   e. The modified PU-1011 Power Supply, mounted in the PU-1014 Power Supply Cabinet, will be used in the XL101 and the XL532 and XL536 Series Sound Systems.

   f. The modified PU-1011 Power Supply may be used as a replacement for the original PU-1011 in XL232, XL236, XL532, XL536 Series Sound Systems and in the XL101 Sound System. However, the plate voltage should be checked when the replacement is made and the strapping of the PU-1013 Dummy Load(s) changed, as required, to obtain a plate supply close to 300 volts.

   g. When the modified PU-1011 Power Supply replaces the original unit in XL432 and XL436 Series Systems, R2 must be changed to its original value of 15,000 ohms.

   h. The modified PU-1011 Power Supply is now being shipped with new systems.

3. PU-1012 Power Supply Cabinets and PU-1013 Dummy Loads will be available for replacement purposes.

4. ASSOCIATED DRAWINGS

IN-138	PU-1014	Power Supply Cabinet, Dummy Load Resistor Strapping
W-1152	PU-1011	Power Supply, Wiring Diagram
W-1153	PU-1011	Power Supply, Schematic

Issued by
Engineering Department
Printed in U. S. A.

May 29, 1956
Issue #1

W-1152

SYMBOL	PART N°	DESCRIPTION
C1	P-3483	CAPACITOR, 500 MF., 25V. ELECTROLYTIC
C2	P-2084	" .40-40 MF., 450V. "
CR1	P-3504	SELENIUM RECTIFIER
F1	P-2582	FUSETRON, 1 AMP
I1	P-2425	LAMP, 6-8 V
L1	P-3486	REACTOR, FILTER - 0.1 H
L2	P-3485	" " " - 15 H
R1	P-3487	RESISTOR, 750 Ω, 25W. WIREWOUND
R2	P-2086	" .10 K, 25W. "
R3	P-3529	" 50 Ω, 25W. "
S1	P-2032	SWITCH, TOGGLE DPST
T1	P-3484	TRANSFORMER, POWER
V1	P-2130	VACUUM TUBE, 5Y3GT
V2	P-2130	" " 5Y3GT
R4	P-3024	RESISTOR, 100Ω, 25W. ADJUSTABLE

DRAWN 10-29-53
ISSUE: 1- 11-13-53
FI WAS P-2582 3AG
6D
ISSUE: 2 11-23-53
IN TABLE '21' RESISTOR 750Ω WAS 500Ω
ISSUE: 3 12-18-53
IN TABLE '22' WAS P-3488 15H
SR
ISSUE: 4 2-15-56

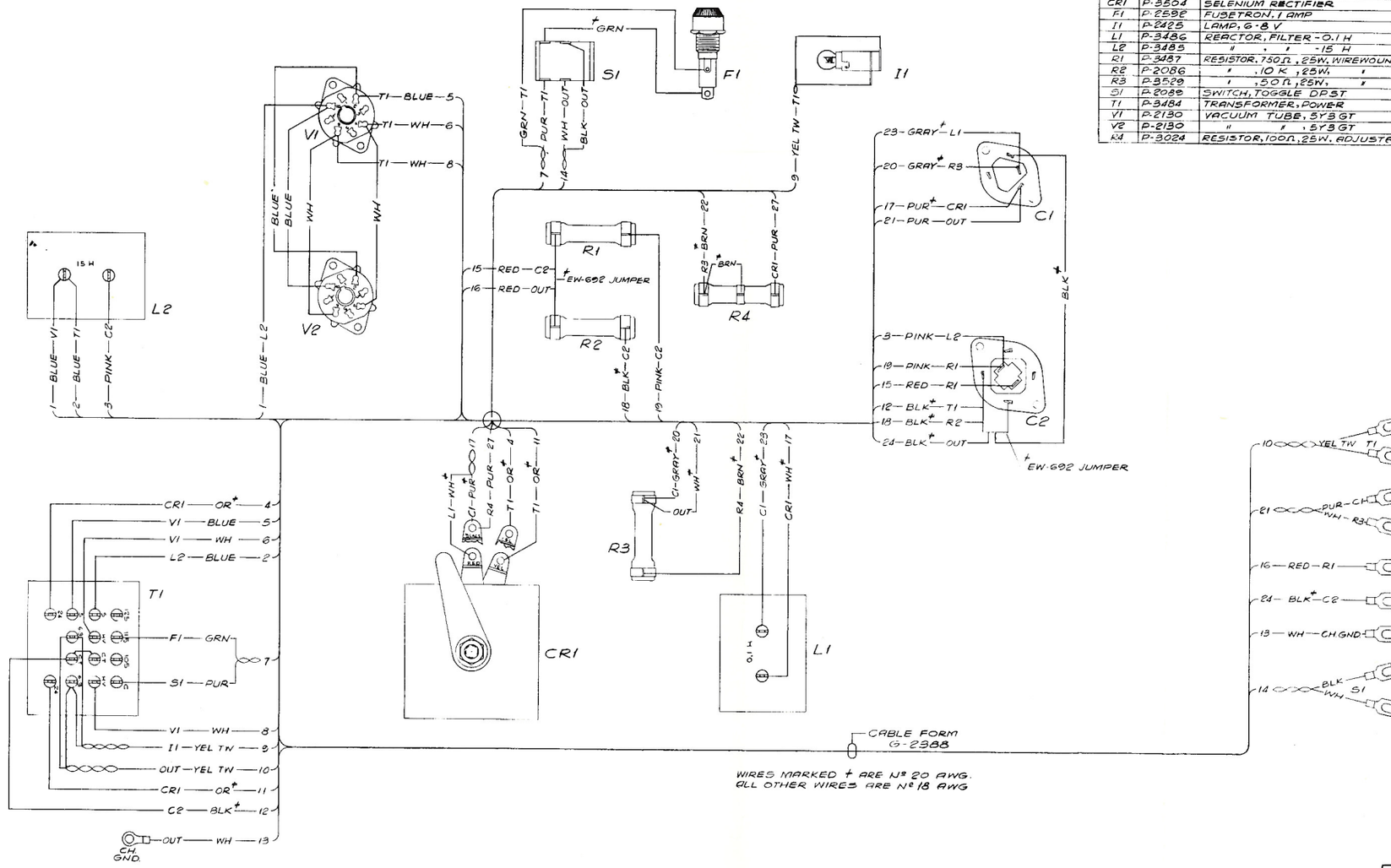

REFERENCE DWGS.
W-1158 SCHEMATIC
PU-1011 POWER SUPPLY

UNLESS OTHERWISE SPECIFIED
REMOVE ALL BURRS BREAK SHARP CORNERS
TOLERANCES OF ALL FRACT. DIM. TO BE ± 1/64
TOLERANCES OF ALL DECIMAL DIM. TO BE ± .005

PRODUCT CLASS F

SCALE

WIRING DIAGRAM
PU-1011 POWER SUPPLY
INTERNATIONAL PROJECTOR CORPORATION
88 LA FRANCE AVENUE
BLOOMFIELD NEW JERSEY
DR. 6D CH'K. APPD.
W-1152

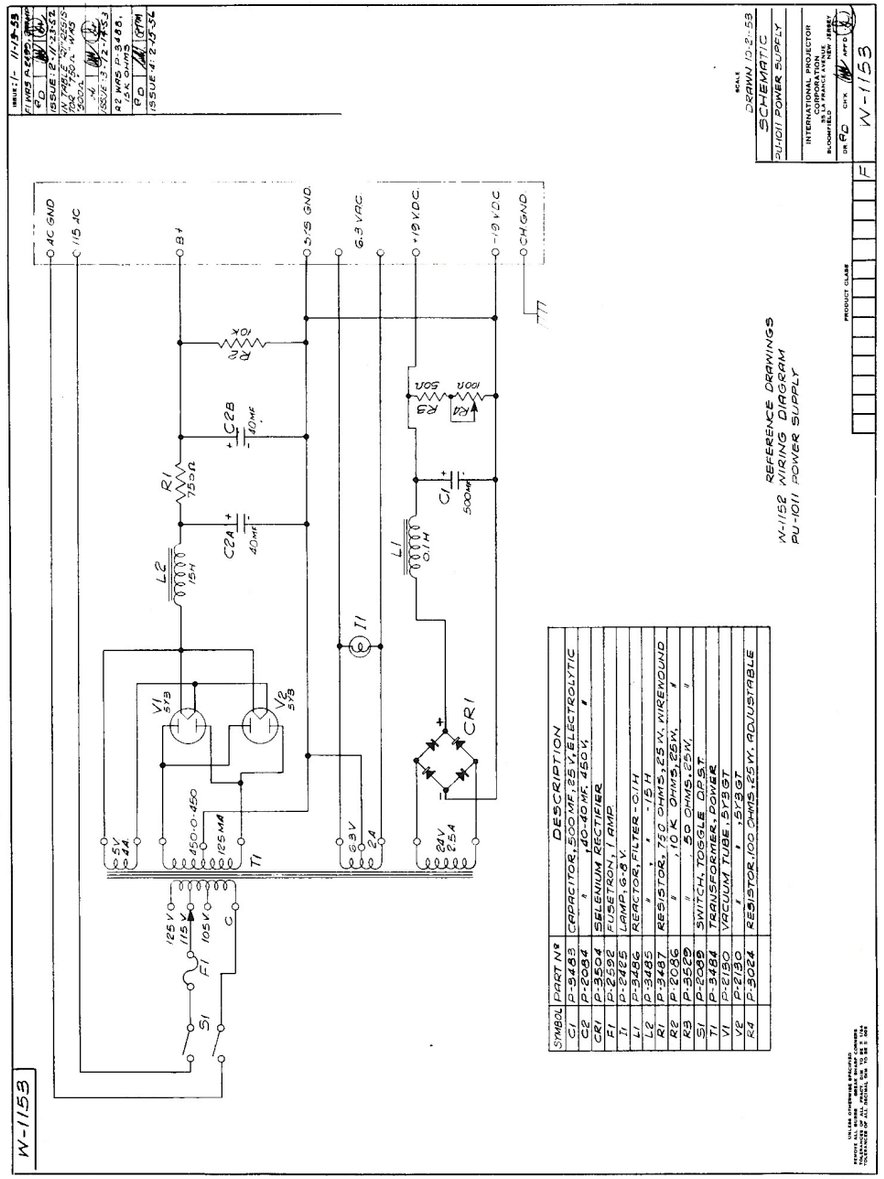

Issued by
Engineering Department
Printed in U.S.A.

IN-138

DRAWN 2-13-56

ISSUE :1 2-14-56

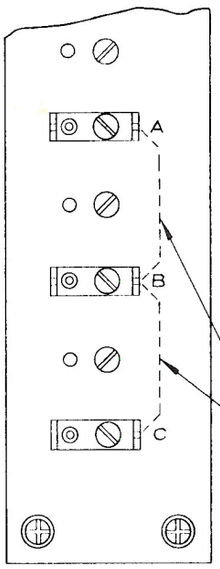

STRAP AS PER CHART

FOR INSTALLATIONS USING:			STRAP
NO. OF AM-1065 PRE-AMPLIFIERS	NO. OF AM-1028 PRE-AMPLIFIERS	NO. OF AM-1064 CONTROL UNIT	
3 OR 4	3	NONE OR 1	AS SHIPPED (NONE)
3 OR 4	1	NONE OR 1	A TO B
2	NONE	NONE	A TO B AND B TO C

G-2561 TERMINAL BOARD
FOR PU-1014 POWER SUPPLY

SCALE ~

INSTRUCTIONS FOR
STRAPPING PU-1014
DUMMY LOAD RESISTORS

INTERNATIONAL PROJECTOR CORPORATION
55 LA FRANCE AVENUE
BLOOMFIELD NEW JERSEY

DR. CH'K. APP'D.

UNLESS OTHERWISE SPECIFIED
REMOVE BURRS BREAK CORNERS
TOLERANCES:
FRACT. DIM. ± 1/64
DECIMAL DIM. ± .005
ANGULAR DIM. ± 1/2°

MAT'L.
MAT'L. SPEC.
FINISH

PRODUCT CLASS F

IN-138

Issued by
Engineering Department
Printed in U.S.A.

1. DESCRIPTION

The SH-1000 (SH-1001) designed for operation for single or push-pull sound track (when using SH-106 Push Pull Kit) on 35 mm film has a black outside, white inside finisned casting with exciter lamp compartment in rear.

A motor assembly (furnished separately), either SH-2053 - 60 cycles, SH-2052 - 50 cycles, or SH-2063 - D.C., including motor and flywheel, flywheel guard and hand brake, is attached to the front of the sound mechanism and drives the projector mechanism and constant speed sound and holdback sprockets in the mechanism through a reduction gear box which may be removed as a unit. The takeup is driven from the mechanism. Belt drive is standard but chain drive may be obtained.

The scanning system, including rotary stabilizer, is assembled on a bracket attached to the sound system by special vibrationless mounting. Prefocused exciter lamp used. Light beam from optical system, after passing through sound film, is reflected to vertically mounted P.E.C. by an adjustable mirror.

Noise level - 35 db or better, flutter .15%, maximum weave ± .001", pick-up time 2 - 3 seconds.

P.E.C. Voltage and exciter lamp supply are obtained from separate sources.

2. MOTORS

Operate on 105/125 V. A.C., 50 or 60 cps ±3% - or 105/125 V. D.C.
5 amp. fusetron recommended for each circuit.

3. INSTALLATION

Remove all existing equipment from the projector pedestals, and install the sound head supports supplied with the system (see table).

Pedestal	Sound Head Support	
"L"	SN-483	
"R" or "M"	SN-484	
Super Simplex or SI	S-1183-L (Up to 20°)	OR
	S-1244-L (Above 20°)	

Clean all parts of the sound mechanism carefully and install to sound head support as follows:

A. Main Frame Assembly. Bolt to the sound head support with four SN-476 Screws (3/8-16 x 1-1/4") and SN-477 Washers. Insert two upper bolts, hand assembly in slotted holes in support and thread in two lower bolts.

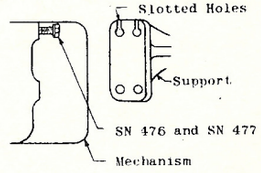

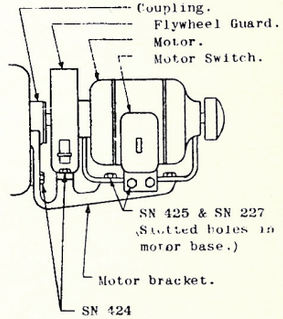

B. Motor Assembly. The motor and flywheel, motor switch box, attached to the motor by flexible conduit, and flywheel guard are shipped mounted on the motor bracket. Remove the motor, motor switch and flywheel guard (see Paragraph C below) from the bracket and mount the bracket on the front of the sound mechanism with four SN-424 Screws (5/16-18 x 3/4"). Mount motor, motor switch and flywheel guard. In assembly the motor shaft slides into the flexible coupling on the gear box drive shaft, the motor is positioned laterally so that it lines up with the coupling, the mounting bolts tightened and the Allen set screws in the coupling tightened.

NOTE: Slotted holes are provided in the motor base and clearance holes in the motor bracket for alignment purposes. For lateral alignment, loosen the motor mounting bolts and shift the motor horizontally. For vertical alignment, loosen the motor bracket mounting bolts and adjust the vertical position of the bracket.

C. Flywheel Guard and Brake. For installation, remove the brake from the guard by loosening the set screw and driving out the pin. To remove the guard from the motor bracket, withdraw the two SN-424 Screws (5/16-18x3/4"). To reassemble the guard and brake, the procedure is reversed.

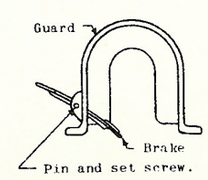

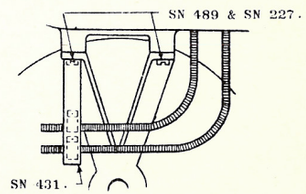

D. Lower Magazine. Bolt the lower magazine and SN-431 Cable Clamp Bracket to the bottom of the sound mechanism, using two SN-489 Screws (5/16-18 x 7/8") and SN-227 Washers. The contractor

should furnish the cable clamps and should clamp the cables securely so that they do not contact the take-up drive belt.

E. Take-up Belt. Adjust length as required and assemble. The take-up is driven from the sound mechanism.

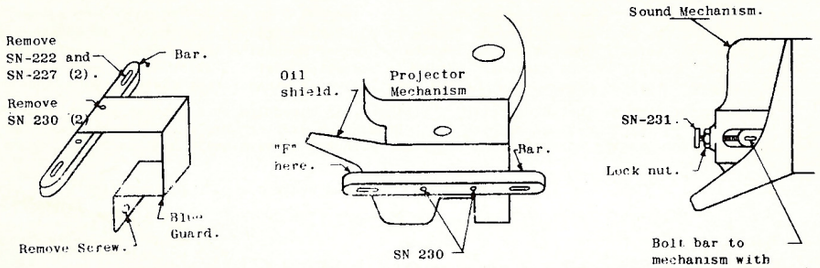

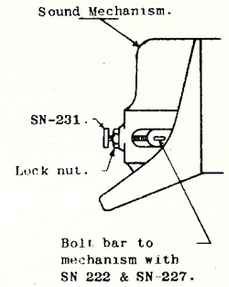

F. Projector Mechanism is installed as follows:

(1) Remove the blue guard on the non-operating side of the sound mechanism, and the bar on the top of the mechanism as a unit, by taking out the screw on the side of the mechanism and the two SN-222 Screws (5/16-18 x 1") and SN-227 Washers fastening the bar to the mechanism.

(2) Detach the blue guard from the bar and discard. Save the two SN-230 Screws (3/8-16 x 5/8") as they are used to bolt the bar to the projector mechanism.

(3) Fasten the oil shield and bar to the mechanism with the two SN-230 Screws. "F" on the bar should be at the front.

NOTE: The SN-475 Oil Shield is used with Regular Super Simplex and E-7 Projector Mechanisms. The SN-493 Oil Shield is used with Model SI Mechanism.

(4) Mount the projector mechanism oil shield and bar assembly on the sound mechanism with two SN-222 Screws and SN-227 Washers through the slotted holes in the bar. Be sure that the SN-231 Screw, on the front of the mechanism, is threaded all the way in for clearance in mounting the drive gear.

(5) Install the drive gear and stud supplied with the system (see table).

Mechanism	Drive Gear	Stud
Regular	SH-2005	SH-2007
Super Simplex	SH-2005	SH-2007
E-7 or SI	SH-2060	SH-2008

(6) Turn the adjusting screw on the front of the mechanism so that proper mesh is obtained between the drive and driven gears. Tighten the lock nut and mounting bolts.

G. Upper Magazine. Bolt to the top of the projector mechanism.

H. Conduit Connections to Sound Mechanism. The coaxial cable should be installed in accordance with the equipment instruction packed with the cable. Flexible conduits should be installed and connected in accordance with the system wiring diagram. Be sure that the threads in the holes in the sound mechanism are clean so that the flexible conduit connectors make good contact when threaded into the holes.

I. Damping Wheel. The SH-2026 Damping Wheel is shipped separately, and should be unpacked, handled and installed carefully to prevent damage. The following installation procedure should be followed carefully in order to insure proper installation and operation of the damping wheel, especially with regard to end play. Too much end play will cause weaving of the scanner drum and result in sprocket hole and frame line noise.

(1) Remove the SN-357 Screw and nut from the drum shaft on the non-operating side of the sound mechanism. The two loose spring washers on the shaft should not be removed.

(2) Unpack the damping wheel carefully, and make sure that all foreign material is removed from the mounting hole.

(3) Slide the damping wheel carefully onto the shaft while holding the scanner drum (operating side of Mechanism) against its shoulder. Line up the mounting holes in the shaft and wheel,

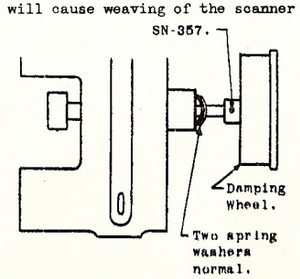

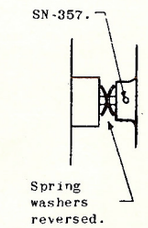

insert the screw, removed under (1) above, in the counter-bored hole in flange and tighten securely so that the slotted flange is clamped to the drum shaft. The nut removed under (1) above is not used.

(4) Check the assembly for end play. The spring washers should hold the scanner drum firmly against its shoulder - that is, the spring washers should be under compression at all times. Therefore, push the stabilizer drum carefully toward the operating side as far as it will go and release it. If the scanner drum does not return and seat firmly against its shoulder, there is too much end play. The damping wheel should then be removed, and one of the spring washers reversed. This will increase the effectiveness of the washers and should give the proper amount of end play.

J. Rear Guard. Atrach to the non-operating side of the main frame assembly, tightening the thumb screws securely.

K. Install the exciter lamp and photo-electric cell supplied with the system.

SN-297 Exciter Lamp (4 amps, 8 volts) - Systems having PU-1000 Power Unit.
SN-298 Exciter Lamp (7-1/2 amps, 10 volts) - Systems having PU-1005 Power Unit.

L. Fill the gear box on the non-operating side slowly with SAE #40 Oil (1-1/2 ounces required) to the red line of the sight glass while the mechanism is idle.

CAUTION: Do not add oil while the mechanism is running. Oil taken up by the running gears will drain into the bottom of the gear box when the mechanism is idle. The oil level will then be too high and leakage may occur around the bearings, especially with large projection angles.

Oil leakage around the bearings may be due to clogged oil return holes in the gear box casting, preventing oil thrown on the bearings from returning to the gear box. If such a condition is encountered (with correct oil level in the gear box) the gear box should be taken out of the sound mechanism, the retainer ring removed from each bearing and the oil return hole carefully cleaned with a toothpick or similar device by pushing the grease deposit down into the gear box.

M. Adjustment of Scanning System. The main frame assembly is shipped with the exciter lamp bracket, lens tube, lateral guide roller and reflector lens mounted and adjusted ready for use. It is recommended, however, that the adjustments be checked. Use Buzz Track Film to check the adjustment of the lateral guide roller. Use the Academy Standard Scanning Illumination Test Track to check the exciter lamp adjustment and for final precise adjustments of the lateral guide roller.

Before proceeding, however, it is extremely important that the exciter lamp, photo-electric cell and lenses be thoroughly cleaned with lens tissue, and all parts of the sound mechanism cleaned with a soft cloth. Refer to Equipment Bulletin "SH-106 Push Pull Kit", File 40.35, Addendum #1, Issue #1, for adjustments of push-pull scanner system.

(1) Exciter Lamp Bracket. Vertical and lateral adjustment are provided for the prefocused base exciter lamp. For vertical adjustment, loosen the clamping screw on the left of the bracket, and adjust the vertical knurled screw at the bottom as required. For lateral adjustment a screw and lock nut are provided on the front of the bracket. To move the bracket inward, loosen the screw and slide the bracket in. To move the bracket outward, tighten the screw. After the adjustments have been completed, be sure that the clamping screw and nut are tight. Check the adjustment with the Academy Standard Scanning Illumination Test Track (See supplement).

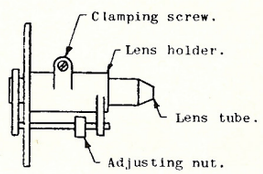

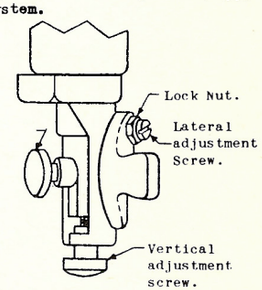

(2) Lens Tube. The lens tube is accurately adjusted for azimuth and properly focused before shipment. The azimuth adjustment should not be disturbed. To focus the lens tube, loosen the clamping screw above the lens holder and turn the knurled adjusting nut below as required. Be sure the clamping screw is tightened after the adjustment has been completed. Two methods of adjustment, using the Academy 8,000 Cycle or Multi-Frequency Test Film, may be used - the response test or flicker test.

(a) Response Test. Thread the machine with the test film, run the machine and adjust the lens tube for focus until maximum response is obtained on a volume indicator or aurally.

(b) Flicker Test. Thread the machine with the test film, place a white card between the film and reflector lens and turn the motor hand wheel slowly. The film frequency lines make a definite flicker of light on the card. The tube is focused when the lines are stationary. If they move downward on the card, the lens tube should be closer to the film - while if they move upward, the tube should be farther from the film.

(3) Reflector Lens (Single track film only). If properly adjusted the spot on the photo-cell should be about 7/16" in diameter and centered on the anode of the cell. To position the spot of light, loosen the clamping screw at the top of the lens holder and carefully rotate the lens until the spot is centered on the anode. To change the size of the spot, move the lens in or out of the bracket as required. If further movement is required, loosen the two lens holder mounting screws and adjust as necessary. Slotted holes are provided in the lens holder. These adjustments are more readily made if the photo-electric cell is removed and a piece of transparent paper substituted.

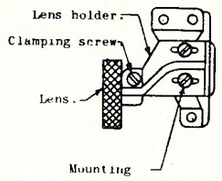

(4) Pressure and Guide Roller. To adjust, loosen the locking screw in the center of the knurled adjusting nut and turn the nut as required. Clockwise rotation moves the roller inward. Be sure that the spiral spring at the rear of the pressure and guide roller holds it firmly against the knurled adjusting nut at all times. When properly adjusted the scanning beam does not strike the frame lines or sprocket holes. Check the adjustment, using Buzz Track Film, and make final precise adjustments with Academy Standard Illumination Test Track.

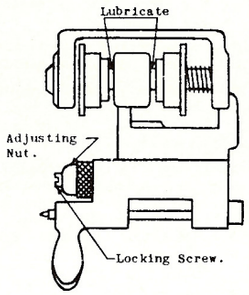

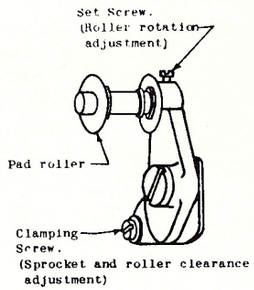

(5) Pad Rollers. The clearance between the sound and hold-back sprockets and their pad rollers should be equal to two thicknesses of film. To adjust, loosen the fillister head clamping screw, insert two thicknesses of film between the roller(s) and sprocket, press the roller(s) firmly against the film and tighten the screw.

The roller(s) should rotate freely. To adjust, loosen the set screw at the top of the bracket, grasp the knurled roller stud, pull carefully until the roller rotates freely and tighten the clamping screw. Do not allow more clearance than is necessary for free rotation.

(6) Lubrication. See Lubrication Chart.

(7) Threading Film in the Sound Mechanism. Film should be threaded in the projector mechanism in accordance with the instructions furnished therewith, and in the sound mechanism in accordance with the following sketch:

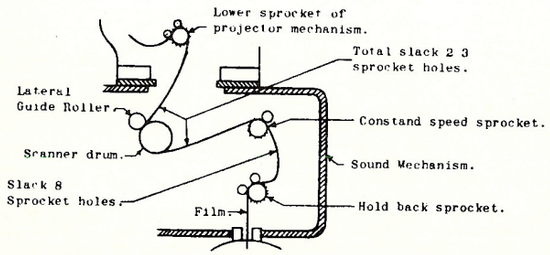

4. OPERATION

A. Clean the mechanism thoroughly each day. It is extremely important that all glassware, reflector lens and lens tube lenses be thoroughly cleaned with lens tissue as these surfaces accumulate particles, such as carbon dust, rapidly with resulting loss in gain.

B. Threading the Mechanism. Thread the mechanism in accordance with the instruction in the previous section. The lateral guide roller must be closed after threading. If the sound mechanism door does not close, the guide roller is open.

C. Lateral Guide Roller Assembly. Pull the guide roller assembly outward, after threading is completed and the roller is closed, until it is in firm contact with the knurled adjusting nut. There is a spring on the stud at the rear of the assembly to hold it firmly against the adjusting

nut. In some instances, however, the assembly may be pushed inward as it is closed and may not return to its proper position due to friction. Sprocket hole noise will occur and can not be remedied by adjustment.

If the assembly has an unusual tendency to stick, the following should improve the condition:

(1) A drop of Simplex Oil should be applied on the supporting stud between the knurled nut and the assembly. Distribute the oil along the stud by pushing the assembly back and forth and opening and closing it several times. Wipe off all excess oil.

(2) Increase the length of the spring at the rear of the assembly from 13/16" to 1-1/8". The effectiveness of the spring will increase and will aid in returning the assembly to its proper position. To increase the length of the spring, remove the assembly and spring and stretch each spring coil carefully until the length is 1-1/8". It is essential that the lengthening be done carefully so that the ends remain perpendicular to the axis of the spring.

(3) In some of the earlier sound mechanisms the threads on the stud were over-size and may tend to cause the assembly to stick. The assembly should then be removed, and fine emery cloth used carefully on the threads only and not on the stud shaft. Clean all parts carefully.

Leave the guide roller open when there is no film in the mechanism. If it is left closed, flat spots will develop on the felt rollers, will cause flutter and make replacement necessary.

5. MAINTENANCE

A. General. Oil, dirt and other foreign material in the mechanism will impair the quality of reproduction, increase wear and eventually cause interruptions in the show and an increase in replacements. Careful cleaning and daily inspection, on the other hand, will insure continued uninterrupted high quality sound.

B. Lateral Guide Roller Assembly. Be sure that the guide roller is left open when there is no film in the mechanism. If left closed, flat spots will develop on the felt rollers, will cause flutter and make replacement necessary. The guide roller assembly must be removed to replace a felt roller.

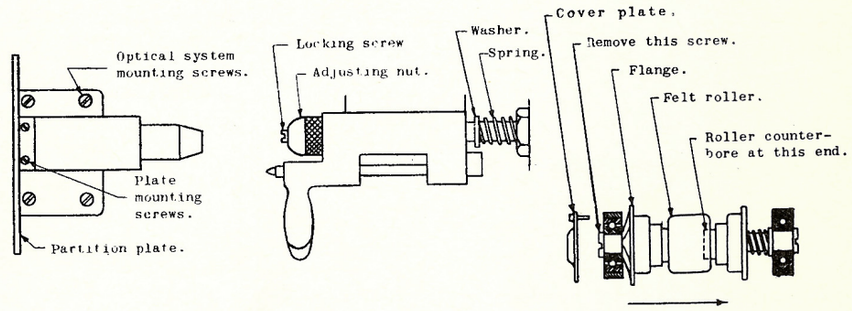

Slide as indicated by arrow.

(1) Removal and Reinstallation of Guide Roller Assembly.

(a) Remove the exciter lamp bracket.
(b) Remove the photo-electric cell and rear photo-electric cell shield.
(c) Remove the two screws holding the partition plate in place and slide out the partition plate.
(d) Remove the four screws mounting the entire optical system and lift out the optical system carefully.
(e) Remove the lateral guide roller assembly by first loosening the locking screw in the center of the chromium plated adjusting nut, remove the adjusting nut and slide the entire assembly from the mounting stud. Be sure that the spring and steel washer back of the lateral guide roller assembly remain on the mounting stud.
(f) Reinstall the guide roller assembly and adjusting nut. Do not tighten the locking screw.
(g) Reinstall the optical system, partition plate and exciter lamp bracket.
(h) By means of the adjusting nut locate the guide roller assembly laterally so that the scanning beam is properly positioned on the sound track, using buzz track and 17-position track film.

In making the above adjustments, be sure that the guide roller assembly is under tension - that is, that the spring on the mounting stud behind the guide roller assembly is functioning so that the guide roller assembly is in contact with the adjusting nut at all times.

While the removal and reinstallation of the optical system may not seriously affect the focus thereof, the focus should be checked with frequency film at the first opportunity.

NOTE: Assemblies returned should be packed carefully to prevent damage during shipment. Each assembly should be carefully wrapped in clean paper so that packing material, such as excelsior or other foreign matter, does not reach the assembly or damage the felt roller.

(2) Replacement of Felt Roller.

(a) Remove cover plate.
(b) Remove screw under cover plate. Use two screw drivers, one to hold screw on other end of shaft.
(c) Slide roller assembly as indicated in the sketch and remove the flange and felt roller.
(d) Install new felt roller and assemble the unit.
(e) Install the lateral guide roller assembly and adjust per the previous section.

C. Deceleration Time - Rotary Stabilizer

(1) The average deceleration time for the Rotary Stabilizer falls between 50 and 60 seconds, but may, however, be as low as 30 seconds without ill effect on reproduction. The deceleration of the stabilizer shaft and drum depends, to a large extent, upon the temperature of the mechanism and the condition of the oil in the bearings. The test procedure is as follows:

(a) Thread film in the projector and sound mechanism in the regular way and run the projector. The instant that the end of the film leaves the scanner drum, open the lateral guide roller - the checking time begins at this moment.
(b) When making the above test, it is important to watch that a smooth run-out occurs; that is, that no sudden stops are observed near the end of the run. If sudden stops happen, it is an indication that dirt has entered one or both ball bearings which will necessitate removal of the bearings, cleaning and relubricating them, or a complete replacement of the bearings.

When it becomes necessary to obtain a replacement bearing it should be ordered as:

1 - SN-359 Bearing.

SH-1000, SH-1001 SOUND MECHANISM

WIRING DIAGRAM AND SCHEMATIC

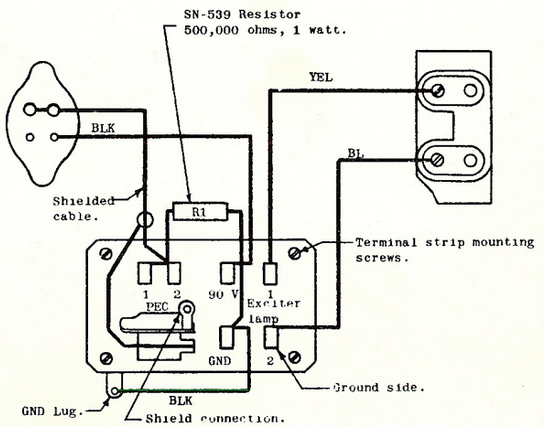

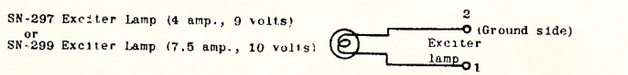

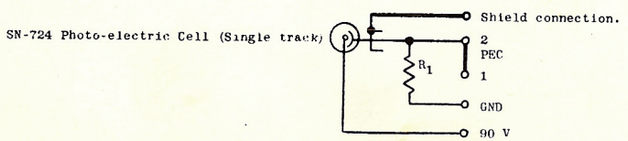

Issued by
Engineering Department
Printed in U. S. A.

SIMPLEX SH-1007, SH-1008 SOUND HEADS

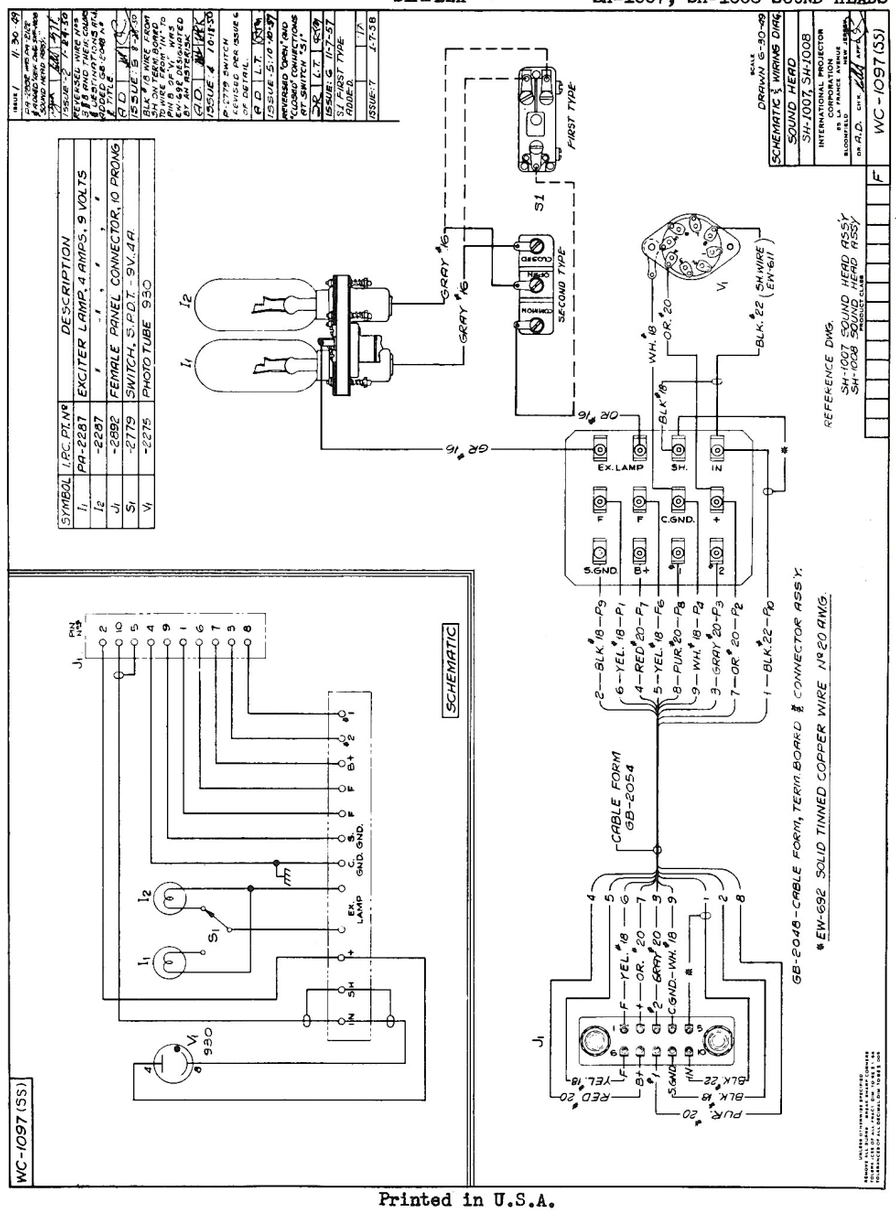

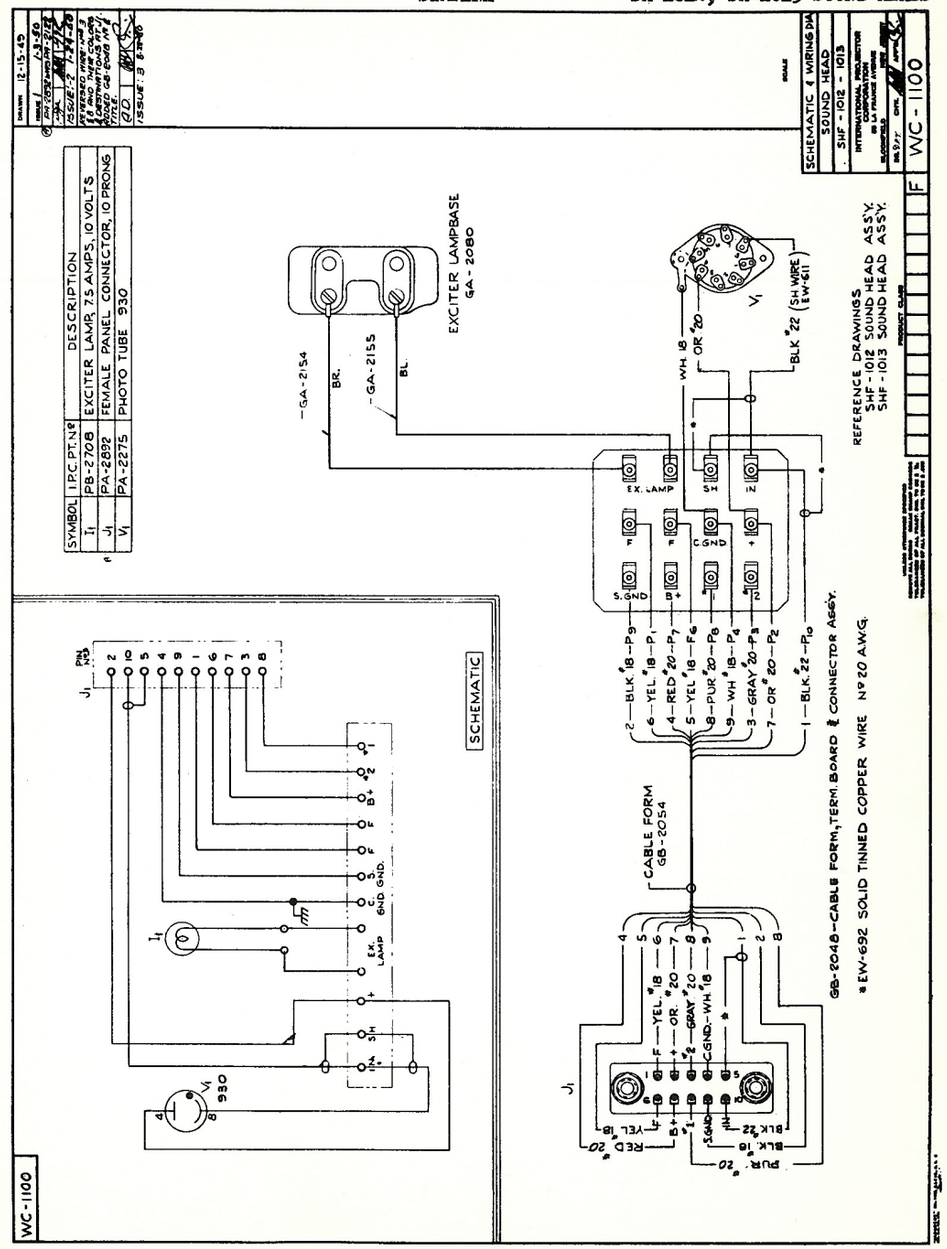
SCHEMATIC 4 WIRING DIA.
SOUND HEAD
SHF-1012 - 1013
WC-1100
DESCRIPTION
SYMBOL
I.P.C. PT. Nº
I1 PB-2706 EXCITER LAMP, 7.5 AMPS., 10 VOLTS
J1 PA-2892 FEMALE PANEL CONNECTOR, 10 PRONG
V1 PA-2275 PHOTO TUBE 930
EXCITER LAMPBASE GA-2080
GA-2154
GA-2155
BR.
BL.
WH #8
OR #20
BLK #22 (SHIELD) EW-611
V1
EX. LAMP
S. GND
REFERENCE DRAWINGS
SHF-1012 SOUND HEAD ASS'Y.
SHF-1013 SOUND HEAD ASS'Y.
CABLE FORM GB-2054
GB-2048-CABLE FORM, TERM. BOARD & CONNECTOR ASS'Y.
*EW-692 SOLID TINNED COPPER WIRE Nº 20 A.W.G.
SCHEMATIC
930
EX. LAMP
END GND.
WC-1100

Simplex ★★★★ SOUND System

SOUND MECHANISM LUBRICATION CHART

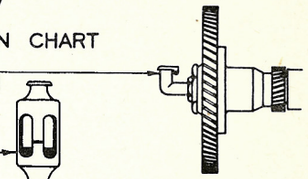

DAILY

FILL OIL CUP CAREFULLY WITH SIMPLEX OIL.

DAILY

ADD SAE #40 OIL AS REQUIRED TO MAINTAIN OIL LEVEL SHOWN WHEN MECHANISM IS AT REST.
(ADD OIL ONLY AFTER MECHANISM HAS BEEN IDLE OVERNIGHT. DO NOT FILL TO RED LINE AFTER INITIAL FILLING WHEN INSTALLED.)

MONTHLY

APPLY 1 DROP OF SIMPLEX OIL TO THE OIL HOLE IN EACH PAD ROLLER.
(ROTATE PAD ROLLER TO DISTRIBUTE OIL.) *

MONTHLY

APPLY 1 DROP OF SIMPLEX OIL TO THE SHAFT AT EACH END OF THE ROLLER. (ROTATE FLANGES TO DISTRIBUTE OIL.) *

SEMI-ANNUALLY

APPLY 1 DROP OF SIMPLEX OIL TO EACH BALL BEARING.
(ROTATE BEARINGS TO DISTRIBUTE OIL.) *

MONTHLY

APPLY A FEW DROPS OF SIMPLEX OIL.

MONTHLY

APPLY 1 DROP OF SIMPLEX OIL TO THE SHAFT. (SLIDE ASSEMBLY IN TO APPLY OIL. OPERATE TO DISTRIBUTE OIL.) *

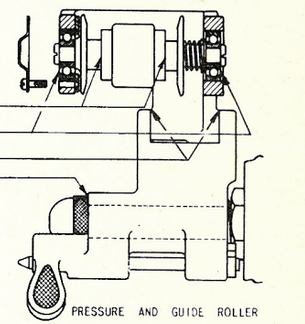

MONTHLY

GIVE EACH GREASE CUP ABOUT 1/2 TURN. DO NOT FORCE TOO MUCH GREASE INTO THE BEARINGS. REFILL WITH SIMPLEX REAR SHUTTER GREASE AS REQUIRED. MARFAK #2 (TEXACO) MAY BE USED AS A SUBSTITUTE.

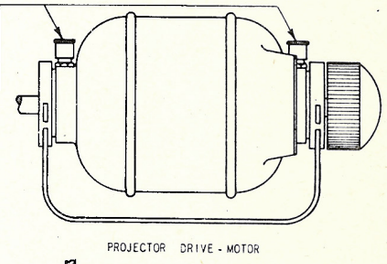

SEMI-ANNUALLY

APPLY 1 DROP OF SIMPLEX OIL TO EACH BALL BEARING.
(REMOVE DAMPING WHEEL AND TWO RETAINER RINGS.
ROTATE BEARINGS TO DISTRIBUTE OIL.) *

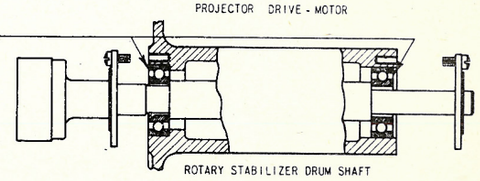

* APPLY SIMPLEX OIL WITH A TOOTHPICK OR PIPE CLEANER. DO NOT OVER-LUBRICATE.
EXCESS OIL SHOULD BE CAREFULLY WIPED OFF WITH CHAMOIS OR LINTLESS CLOTH.

ISSUED BY
SOUND ENGINEERING DIVISION
INTERNATIONAL PROJECTOR CORPORATION
NEW YORK

	SH-1007	SH-1013	
SIMPLEX	SH-1008	SH-1020	X-L SOUND HEADS
	SH-1012	SH-1021	

The supplier informs us that due to difficulties in obtaining the oil gauge used on Simplex Sound Mechanisms, a redesign has been necessary and current shipments include an oil cup instead of the oil gauge.

This oil cup should be filled full of Simplex Sound Mechanism Oil and this level maintained during operation. It will be necessary to check this level by inspection as there is no visual indication of the oil level such as was available on the previous design.

Issued by
Engineering Department
Printed in U.S.A.
January 8, 1951
Issue #1

1. DESCRIPTION

A. Use. In SH-1000 and SH-1001 Sound Mechanisms to convert the mechanism for reproduction of either single track or push-pull film recordings. It may be added initially or at any future date as an extra.

In the SH-106 Push-Pull Kit the combination of signals is obtained by transmitting the signals from the anode of one-half of the cell and the cathode of the other half of the cell to a common point. Thus the phase relationship of the two signals is accomplished, and if the signal strength of each is adjusted to the same value optimum results are obtained.

B. List of Parts (Per Sound Mechanism).

1 SH-2020 Push-Pull Lens & Reflector Assembly (Beam Splitter)
1 SH-2021 Push-Pull Balancing Unit Assembly
1 SN-331 Photo-electric Cell (Push-Pull)

2. INSTALLATION

The procedure for installing the SH-106 Push-Pull Kit in the SH-1000 and SH-1001 Sound Mechanisms is as follows:-

A. Remove the rear guard.

B. Remove the damping wheel. Leave the spring washers on the shaft, and insert a screw in the hole in the shaft so that the shaft does not slide out.

C. Disconnect the external wiring from the terminal strip.

D. Remove the exciter lamp bracket and photo-electric cell.

E. Remove the three sound bracket mounting bolts, and remove the sound bracket as a unit.

F. On the sound bracket, disconnect the exciter lamp wires from the screw terminals of the exciter lamp base.

G. On the photo-electric cell bracket remove the bottom plate, and disconnect the wires from the photo-electric cell socket.

H. Remove the present terminal strip, blank plate and internal wiring.

I. Remove the reflector lens and bracket from the sound bracket.

J. Install the SH-2020 Push-Pull Lens & Reflector Assembly on the sound bracket in place of the present reflector lens bracket (per Figure 2).

K. Install the SH-2021 Push-Pull Balancing Unit Assembly on the sound bracket (per Figure 2).

L. Connect the SH-2021 wires to the exciter lamp terminals and photo-electric cell socket (per Figure 3), replace the plate on the bottom of the photo-electric cell bracket, and re-install the sound bracket.

M. Install the exciter lamp and SN-331 Photo-electric Cell, and close the photo-electric cell shield.

Note:- When single track film is being run, the SN-724 photo-electric cell may be used in place of SN-331.

N. Reconnect the external wires and install the damping wheel and rear guard.

3. ADJUSTMENT OF SCANNER SYSTEM

The method of focusing light on the push-pull sound track is the same as that employed for single track reproduction. However, instead of a reflector being used to project the sound track image on the photo-electric cell as for single track reproduction, the image is passed through a "beam splitter" (having two cylindrical lenses) in such a manner that the image of each track falls on separate cathodes in the push-pull photo-electric cell (see Figure 1). The proper separation of these two sound tracks is dependent upon the correct adjustment of this "beam splitter", both as to focus and position.

A. The Exciter Lamp, Lens Tube and Lateral Guide Roller are adjusted for optimum response at the factory, and should be received ready for operation. If, however, there is definite evidence, during the adjustment procedure described below, that readjustment of these items is required, the method described in the Equipment Bulletin "SH-1000 Sound Mechanism", packed with the mechanism, should be followed.

B. Push-Pull Lens and Reflector Assembly

(1) Positioning Light on Cylindrical Lenses. With the exciter lamp bright and no film in the mechanism, the light (as viewed through a piece of translucent paper placed against the two cylindrical lenses) should practically fill both of the lenses and be centered vertically and horizontally. If necessary adjust the exciter lamp vertically and laterally.

(2) Focusing the Push-Pull Lens & Reflector Assembly. The assembly is in focus when the push-pull film track septum appears as a sharply defined vertical black line on the translucent paper placed against the lenses with the exciter lamp bright.

To focus, thread a standard push-pull film in the mechanism, preferably a variable density sound track, and rotate the motor hand wheel until the film is tight around the drum (in its normal running position). This film position must be maintained throughout the adjustment procedure. Adjust the "beam splitter" laterally, if necessary, so that the sound track septum does not coincide with the division line between the two lenses, and then adjust this assembly longitudinally until the septum is in focus as described above. Tighten the two longitudinal adjusting screws securely. This adjustment must be made carefully to obtain proper separation of the sound tracks and optimum results.

Note - Adjustment will be facilitated by the use of a short piece of 1/16" drill rod in the holes provided in the bracket. (See Figure 2.)

(3) Alignment of Sound Track Septum and Division Line of the Two Lenses. The septum must be in exact alignment with the division line of the two lenses, as viewed on the translucent paper referred to above (exciter lamp bright), to obtain proper separation of the two tracks at the photo-electric cell and maximum cancellation.

This adjustment should be made only after the lens and reflector assembly has been focused per Paragraph (2) above. With the film positioned per the preceding paragraph, adjust this assembly laterally until the septum coincides exactly with the division between the two lenses. This adjustment must be made carefully, and the two adjusting screws tightened securely. Since the location of this septum varies slightly from film to film, and with film age due to shrinkage, the alignment must be checked with each print.

C. Push-Pull Balance. Due to the fact that the two halves of the push-pull photo-electric cell seldom have the same sensitivity, a potentiometer has been provided to vary the potentials applied to the two anodes of the cell in order that this sensitivity may be equalized for push-pull reproduction. This voltage adjustment will also be used to balance out residual unbalance in illumination, but should be resorted to only after the best possible optical balance has been attained.

(1) Optical Balance. Having carefully adjusted the lens and reflector assembly per Section B above, set the switch in "PP" position and the balancing potentiometer in approximately mid-position. Then with the exciter lamp at full brilliancy on alternating current and no film in the machine;

(a) Readjust the exciter lamp laterally for minimum hum level, as indicated on a volume indicator at the main amplifier output.

(b) Finally adjust the potentiometer for minimum hum (preferably with the main system volume control set for maximum volume).

(2) Electrical Balance. Set the switch in "PP" position, operate the exciter lamp on direct current and thread the mechanism with a standard single track frequency film. With the mechanism running, further adjust the potentiometer for minimum signal, as observed on a volume indicator at the output of the main amplifier. The amount of signal cancellation may be observed, using this same film, by switching from "PP" to "STD" position. The difference in level should be 25 db or better.

4. OPERATION

A. Single Track. Set the "STD-PP" switch in "STD" position.

B. Push-Pull. Set the "STD-PP" switch in "PP" position.

Except for the operation of the "STD-PP" switch as described above, the mechanism should be operated in accordance with Equipment Bulletin "SH-1000 Sound Mechanism."

5. MAINTENANCE

The sound mechanism should be maintained in accordance with Equipment Bulletin "SH-1000 Sound Mechanism", except that the push-pull balance should be checked frequently as described above

and especially when a new exciter lamp or photo-electric cell is installed. The alignment of the sound track septum and division line of the two lenses should be checked with each print.

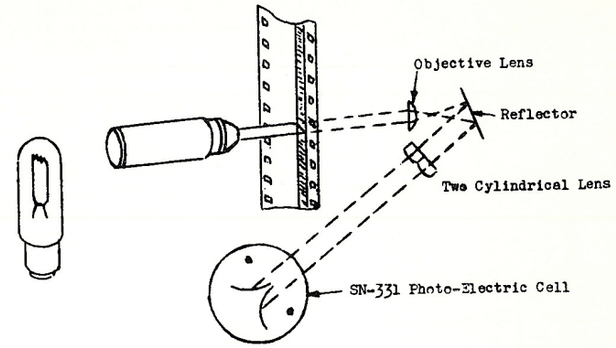

FIGURE 1

OPTICAL SCHEMATIC

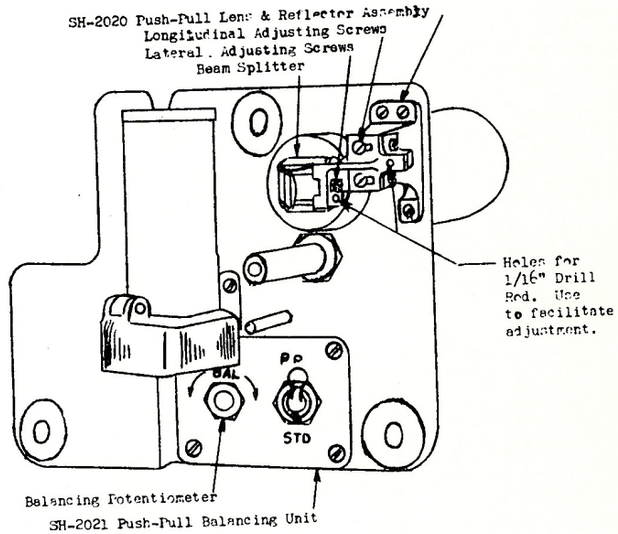

FIGURE 2

SOUND BRACKET SHOWING
SH-2020 Push-Pull Lens and Reflector Assembly
and SH-2021 Push-Pull Balancing Unit Installed.

SH-106 PUSH-PULL KIT

DESIG.	PART NO.	APPARATUS
VT_1	SN-331	Push-Pull P.E.C. (RCA #920)
C_3, C_4	SN-515	.005 Mfd. 500 V. Mica Capacitor
R_3, R_4	SN-517	2 Meg. 1 Watt Resistor
S_1	SN-853	Switch - DPDT Toggle
R_1, R_2	SN-864	500,000 ohm 1/2 Watt Resistor
C_1, C_2	SN-1035	.1 Mfd. 400 V. Paper Capacitor
P_1	SN-1036	100,000 ohm Potentiometer

NOTE: When installing push-pull, connect additional 1/2 meg. 1 watt resistor (R_x) between P.E.C. and ground to flatten bump in characteristic between 100 and 500 cycles.

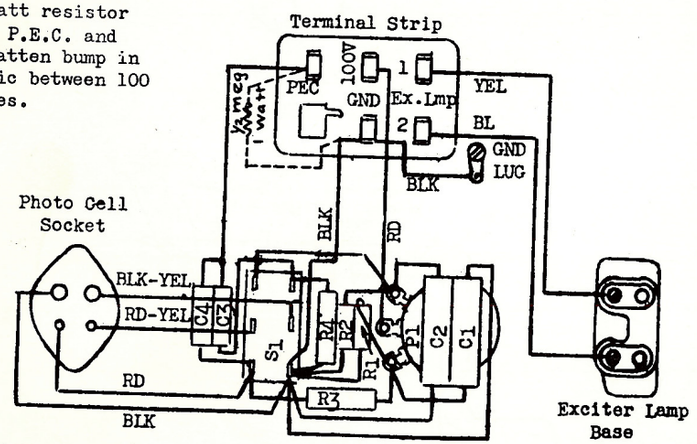

WIRING DIAGRAM

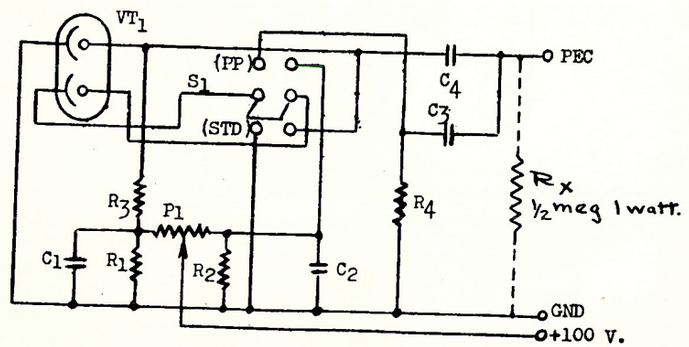

SCHEMATIC

FIGURE 3

(AM-101 Volume Control Amplifier Resistor Change)

1. AM-101 VOLUME CONTROL AMPLIFIER RESISTOR CHANGE.

The following resistors are supplied with each SH-106 Push-Pull Kit:-

1 SN-523 Resistor (55,000 ohms)
1 SN-1054 Resistor (60,000 ohms)

These resistors should replace R_9 and R_{10} respectively in each AM-101 Volume Control Amplifier (See figure below) in systems having SH-1000 or SH-1001 Sound Mechanisms equipped with the SH-106 Push-Pull Kit.

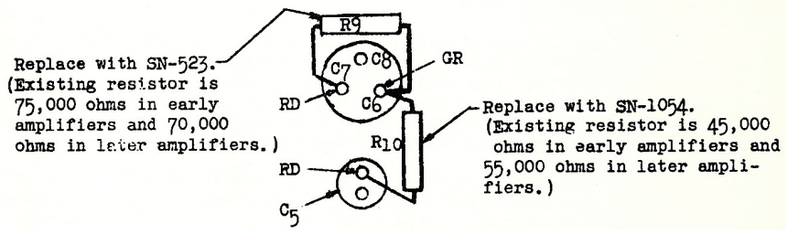

The resistors are installed in the voltage divider circuit of the AM-101. They increase the voltage applied to the potentiometer in the SH-2021 Push-Pull Balancing Unit Assembly, and thereby insure adequate adjustment range of the potentiometer as described in the Equipment Instruction "SH-106 Push-Pull Kit".

2. SPECIAL NOTES ON ADJUSTMENT OF SH-106 PUSH-PULL KIT.

A. Level.

(1) It is possible that there may be considerable variation in output level of individual push-pull cells SN-331 (RCA #920) and also of standard cells SN-724 (RCA #868). Accordingly the photo-electric cells should be interchanged between machines, and also replaced to determine whether or not this is the cause of the variation.

(2) As another check, the push-pull cells should be replaced with standard SN-724 (RCA #868) Cells; again to determine whether the variation is due to the cell proper or to some other part of the circuit. The photo-electric cell wiring is such that the standard cells may be used without change in electrical connections. It is only necessary to throw the switch to "Standard" position.

(3) There is a difference in the input resistance and capacitance, resulting in a change in the coupling impedance, which reduces the response approximately 2 db at 8,000 cycles in reproduction of both standard and push-pull where the push-pull kit is installed, as compared with the sound head without push-pull.

In tuning the system to the recommended Academy characteristic (equivalent to Lz, p) special attention should be given to the adjustment of the AM-1001 Amplifier warping circuit elements in order to obtain the proper electrical characteristic equivalent to the recommended Academy curve. With the facilities in the warping circuit, combinations of elements should be obtained easily even though they are not exactly as shown on drawing SC-21, associated with the Tuning-Up Instructions for the particular system. In all cases the electrical characteristic, as measured with multi-frequency film and a volume indicator, should be the final determination. Do not merely set the connections as shown in the block schematics on drawing SC-21 and expect the electrical characteristic to come out exactly as shown on the curve - as for critical adjustments, it is important to explore the characteristic by actual measurement.

B. Cancellation or Balance.

(1) To insure maximum cancellation or balance it is very important that the optical system be adjusted carefully per Equipment Instruction "SH-106 Push-Pull Kit", and also that the electrical circuit be properly adjusted by means of the balancing potentiometer in the SH-2021 Push-Pull Balancing Unit Assembly. The equipment instruction describes a method of performing this by using standard single track frequency film.

(2) The cancellation factor can be improved by twisting SH-2021 wires to the photo-electric cell socket - that is, the black-yellow and the red-yellow wires should be twisted as a pair and the red and black wires should be twisted as another separate pair.

C. Optical Adjustments.

(1) One of the most important and obvious reasons for loss of high frequencies is maladjustment of the lens assembly. While it is reasonable to assume that the lens tube focus has been checked using 8,000 cycle film in the regular manner (refer to Section 1 of the Tuning-Up Instructions for the particular system) this adjustment should be verified.

(2) As mentioned under Section "B" above, it is most important that the reflector assembly with the cylindrical lenses be precisely located. Too much emphasis cannot be placed upon the importance of making these adjustments. By merely saying that it must be done "precisely" does not mean that it requires only a little more than ordinary care. It is a very precise adjustment and requires considerable time until an individual is thoroughly acquainted with the method and procedure.

In this connection the point mentioned in the equipment instruction with regard to accurate lateral positioning of the exciter lamp should be emphasized. This is best done with the standard Academy 17-Track Test Film. The buzz track is not adequate for this adjustment.

The method outlined in the equipment instruction for obtaining optical balance with the exciter lamp operating on AC must be very carefully followed. It may be necessary to find an optimum setting between the balancing potentiometer and the position of the exciter lamp, this setting being arrived at by a simultaneous adjustment of both elements. In doing this, however, care should be taken that an incorrect position of the exciter lamp laterally is not compensated for in the adjustment of the balancing potentiometer.

1. DESCRIPTION.

A. Use. Couples the SH-1000 or SH-1001 Sound mechanism output to a TA-7387 Amplifier or 500 Type Amplifier Set when the sound mechanism replaces a Western Electric 209 or 211 Reproducer Set. It consists of a metal cabinet with a screw-cover, in which are installed, in the field, the PEC filter mesh, coupling transformer and terminal strip removed from the replaced Western Electric Reproducer Set.

B. Mounting. On the sound mechanism by means of details supplied.

C. Size. 6¼" H x 6¼" W x 9" D. D. Weight. 10 lbs.

2. INSTALLATION.

A. The PEC filter mesh, coupling transformer and terminal strip should be removed from the replaced W.E. Reproducer Set, installed in the cabinet per the associated drawing SH-2066 and the wires connected to the same terminal strip terminals. Mount the assembly on the sound mechanism per SH-2066.

B. Resistor R_3 Change. The SN-521 Resistor (75,000) ohms), packed in the cabinet, should be substituted for the Resistor R_3 (100,000 ohms) in the filter mesh circuit to provide the proper polarizing potential. Refer to circuit label on 209 or 211 Reproducer Set and drawing SH-2066.

C. Wiring Changes when SH-1000 or SH-1001 is equipped for Push-Pull Film Reproduction.
In addition to the resistor change described in section 2-B, the following wiring changes are required in the coupling unit to provide for equalization of push-pull outputs.(see Figure)

(1) At C_1 disconnect blue transformer lead from junction of R_1 and R_3, and reconnect to black terminal of C_1 (other side of R_3).

(2) Disconnect the green transformer lead from PEC terminal on the transformer mounting bracket, and tape. Remove the tape from the blue-white transformer lead and connect it to this terminal.

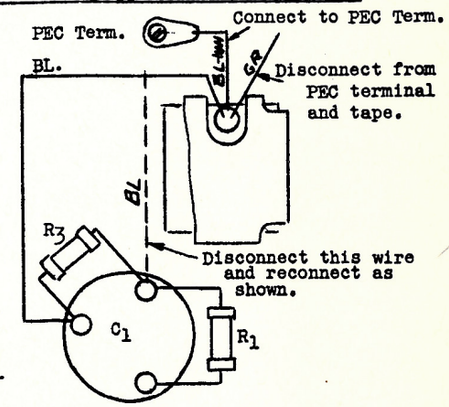

D. External Connections. Terminal Strip connections in the SH-1000 or Sh-1001 and SH-2066 should be made per drawing WD-161 associated with the Installation Instructions.

3. ASSOCIATED DRAWING. SH-2066 Coupling Unit Assembly.

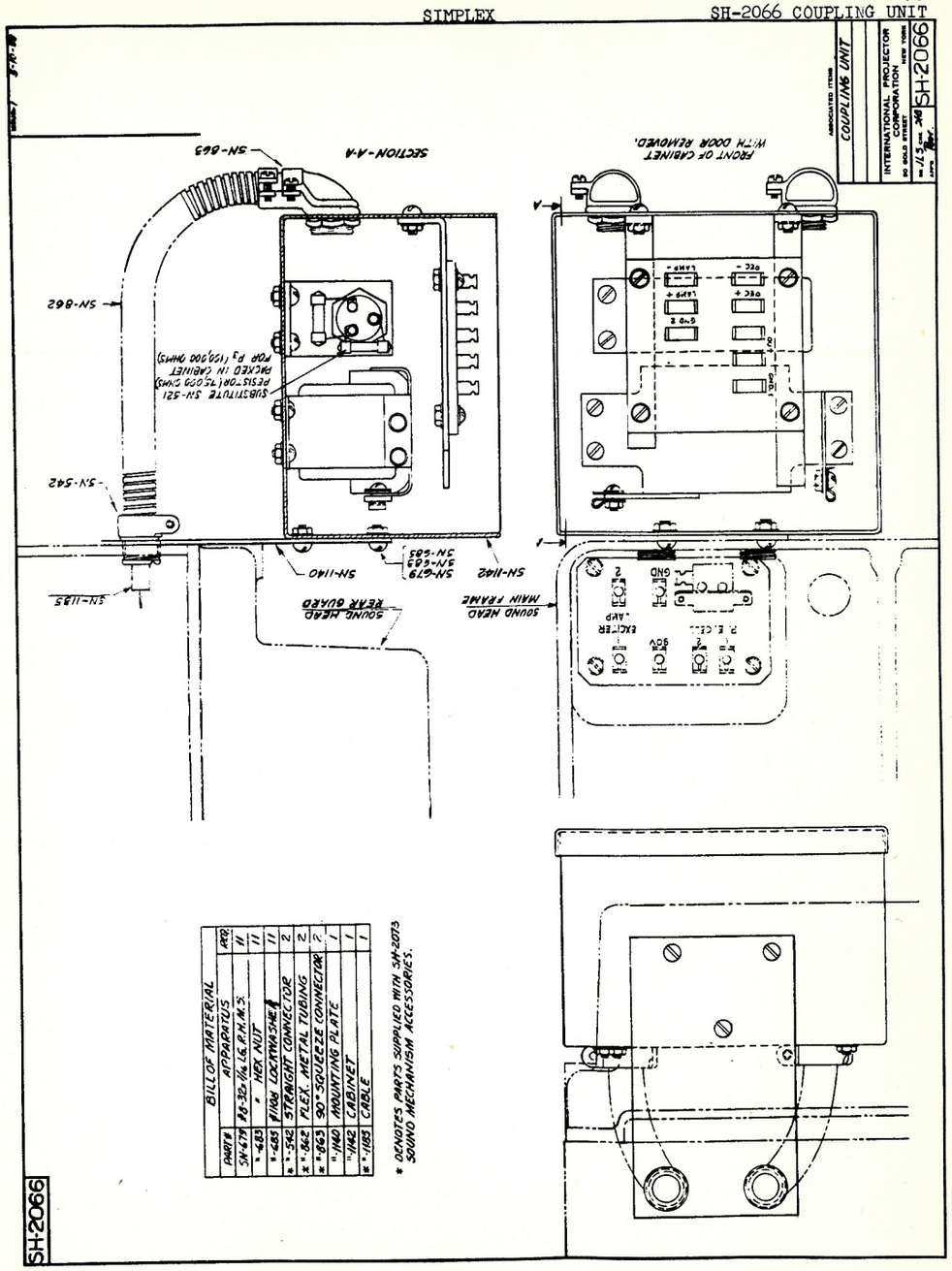
COUPLING UNIT
INTERNATIONAL PROJECTOR CORPORATION
SH-2066
SECTION-A-A
FRONT OF CABINET WITH DOOR REMOVED.
SN-663
SN-862
SN-542
SN-1185
SN-1140
SN-679
SN-683
SN-685
SN-1142
SUBSTITUTE SN-521 RESISTOR (7500 OHMS) PACKED IN CABINET FOR P3 (159,900 OHMS)
SOUND HEAD REAR GUARD
SOUND HEAD MAIN FRAME
EXCITER .AMP
BILL OF MATERIAL
APPARATUS
PART#
SN-679 #8-32 x 11/16 R.H.M.S.
* HEX. NUT
* #485 #10BA LOCKWASHER
* * -542 STRAIGHT CONNECTOR
* * -862 FLEX. METAL TUBING
* * 963 90° SQUEEZE CONNECTOR
* 1140 MOUNTING PLATE
1142 CABINET
* 1185 CABLE
* DENOTES PARTS SUPPLIED WITH SH-2075 SOUND MECHANISM ACCESSORIES.
SH-2066

1. DESCRIPTION.

Two types of Simplex Take-Ups known as "Old Style" and "New Style", have been furnished. The differences are shown in the figures below. When used with the SH±1000 Sound Mechanism, a change should be made in the take-up to take care of a slight misalignment between the drive pulley on the sound mechanism and the driven pulley on the take-up. The parts required, one SN-481 and one SN-482 Spacer, are shipped with the sound mechanism accessories.

2. OLD STYLE TAKE-UPS.

Both spacers are required, located as shown in Figure 1. Disassemble the take-up and drill a new hole the same size as the present oil hole, 7/16" to the right of the tapped hole. Install the two spacers and reassemble. The new hole becomes the oil hole, and the set screw engages the former oil hole in the bushing.

3. NEW STYLE TAKE-UPS.

Only the SN-482 Spacer is required, located as shown in Figure 2. Disassemble the take-up, install the spacer and reassemble.

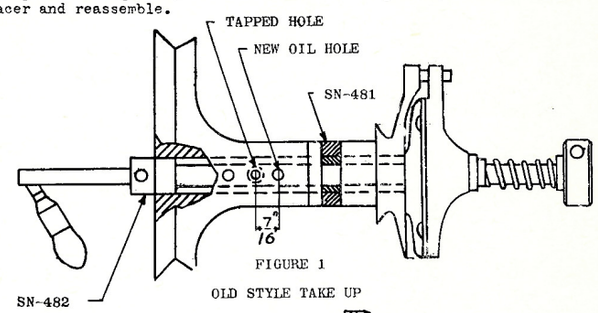

FIGURE 1
OLD STYLE TAKE UP

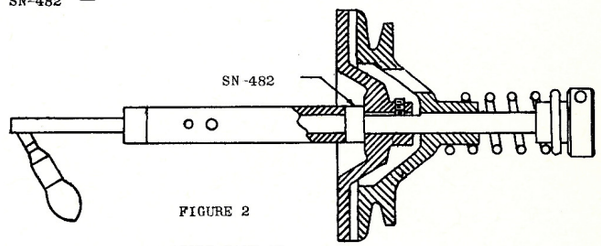

FIGURE 2
NEW STYLE TAKE-UP

4. OPERATION.

The take-up should be adjusted so that smooth operation is obtained throughout the running of the entire reel. At the beginning of the reel there should be no slack film, and at the end of the reel tension on the film should not be excessive.

In some instances, even after careful adjustment, difficulty may be experienced in obtaining constant smooth operation. This is usually due to the pulley and collar not rotating freely on the shaft, or the shaft not rotating freely in its bushing. It may be caused by dirt or too little clearance between the running surfaces. In such cases, disassemble the take-up, clean all parts carefully, check for clearance and, if the parts do not rotate freely, carefully ream out the collar, pulley or shaft bushing, as required. Enlarge the holes only enough to ensure free rotation of the parts. The friction discs should operate smoothly with or without lubrication - smooth operation is not aided by lubrication of the discs. An oil hole is provided for lubrication of the shaft. For this purpose Simplex Oil, applied sparingly, should be used.

Printed in U. S. A.
Issue #1
June 18, 1941

1. EQUIPMENT

1.1 The equipment required in the sound mechanism modernization of systems using Western Electric Reproducer Sets depends upon the type of equipment installed. The tabulation lists the types of Western Electric equipment and the Simplex Modernization Kit to be ordered.

SIMPLEX MODERNIZATION KIT PER PROJECTOR			WESTERN ELECTRIC EQUIPMENT INSTALLED			
60 CYCLE	50 CYCLE	DC	REPRODUCER SET	PRE-AMPLIFIER	FADER	POWER AMPL.
SH-10	SH-13	SH-16	D-Spec. 1-A Base *206; 208	D-85943; D-86729 49 49 or 62	(398 (702 (705	(46; 41-42; (41-42-43
SH-11	SH-14	SH-17	206; 208	49 or 62	713 TA-7305	46, 41-42; 41-42-43; 86; 86-87; D-95036
SH-12	SH-15	SH-18	206; 208 209; 211 209; 211	TA-7387 TA-7387 -	753 753 753	86; 86-87 86; 86-87; 91.

* Special combination found only in systems that have been modernized.

In addition to the above, the type of exciter lamp supply determines the exciter lamp required (2 amperes or 4 amperes) which should be determined from the following:

ORDER	EXCITER LAMP SUPPLY
SN-297 Exciter Lamp (4 Amperes)	Storage Batteries (12 Volt) KS-5259 Motor Generator Set TA-4035 Power Unit 5-A Current Supply Set
SN-312 Exciter Lamp (2 Amperes)	TA-7276 Power Unit KS-7146 Current Supply Set 12 Type Rectifier

SH-106 Push-Pull Kits may be installed in SH-1000 or SH-1001 Sound Mechanism initially or at any future date as an extra. Mechanisms so equipped will reproduce either push-pull or single track film recordings, an important feature in the sale of sound mechanism modernizations.

Example:- If the power supply is 105 - 125 volts, AC, 60 cycles ± 3%, and the equipment installed consists of:

2 #1-A Bases
2 #49 Amplifiers
1 #702 Type Control Cabinet
1 #41 and #42 Type Amplifier
1 KS-5259 Motor Generator Set

Order: 2 SH-10 Modernization Kits with SN-297 Exciter Lamps

If push-pull equipment is also specified add to the above order:

2 SH-106 Push-Pull Kits.

2. INSTALLATION OF EQUIPMENT

2.1 These instructions cover the replacement of Western Electric Reproducer Sets by Simplex Sound Mechanisms. The associated drawing shows the typical conduit arrangement and wiring diagram for the modernization equipment furnished for the types of Western Electric equipment tabulated below.

FIGURE ON WD-161	WESTERN ELECTRIC EQUIPMENT INSTALLED			
	REPRODUCER SET	PRE-AMPLIFIER	FADER	POWER AMPLIFIER
1, 1-A	D-Spec.	D-85943; D-86729	(398	(46; 41-42;
	1-A Base	49	(702	
			(705	(41-42-43
	*206; 208	49 or 62		

*This combination is special and will be found only in systems that have been modernized.

Issued by
Engineering Department
Printed in U. S. A.

October 25, 1945
Issue #1

FIGURE ON WD-161	WESTERN ELECTRIC EQUIPMENT INSTALLED			
	REPRODUCER SET	PRE-AMPLIFIER	FADER	POWER AMPLIFIER
2, 2-A	206; 208	49 or 62	713 TA-7305	46, 41-42; 41-42-43; 86; 86-87; D-95036
3, 3-A	206; 208	TA-7387	753	86; 86-87;
	209; 211	TA-7387	753	86; 86-87;
	209; 211	-	753	91

The preferred location of the equipment is shown on the associated drawing, and insofar as Projection Room front wall conditions permit this arrangement should be maintained.

A. Mounting. All equipment, outlet boxes and condulets should be fastened to brick or concrete walls with bolts and expansion shields; to tile walls with toggle bolts; and to gypsum block or transite walls with through bolts.

B. Conduit. The rigid conduit used should not be smaller than specified on the associated conduit layout, but larger conduits may be used if installed or if required to conform to local ordinances.

NOTE: "BX" or flexible conduit (Greenfield) may be used instead of rigid conduit for all runs if local, city and state regulations permit.

C. SH-2100 Coaxial Cable. Special care should be taken in the handling and installation of the coaxial cable, coupling the sound mechanism output to the AM-145 Pre-Amplifier input, as sharp bends or kinks may damage it and make replacement necessary. A fixed length of coaxial cable is shipped completely assembled with a flexible conduit connector at each end. The connector clamping screws may be loosened for installation, but DO NOT DISSEMBLE THE CABLE OR SHORTEN IT.

D. Wiring. The wires should be of the sizes specified on the above drawing, except that larger wires already installed may be used.

The color for wiring should be as follows:-

White Conductor - Negative, common or ground.
Black Conductor - Positive

All connections should be soldered with rosin core solder. No flux of any kind should be used.

3. INSTALLATION MATERIAL SUPPLIED BY THE CUSTOMER

3.1 Before ordering the installation material the associated conduit layout drawing should be carefully studied, the location of the equipment determined, and the conduit runs planned. Existing conduit and wiring should be used if suitable.

3.2 The number of feet of conduit, and the length of wire required, will depend upon the size of the Projection Room and the location of the equipment. The number of condulets required will depend upon the number of bends in the various conduit runs. Condulets are recommended so that wires may be more readily pulled through the conduit.

4. POWER REQUIRED.

4.1 The main power feeders to the Projection Room should be of adequate size to obtain good regulation, and the voltage and frequency should be within the limits given below during operating hours. High quality sound reproduction and equipment life are dependent upon these factors.

4.2 The power supply in the Projection Room should be 105 - 125 volts AC., 50 or 60 cycles plus or minus 3%. The main power feeders to the Projection Room should be of sufficient size to carry the regular load of the projector arcs, other projection room equipment, the sound system amplifiers, rectifiers, etc., and in addition a load of 30 amperes for the sound mechanisms (25 amperes starting, 3.2 amperes running current).

4.3 The existing conduit and wiring to the projector motors may be used wherever suitable. It is recommended that each motor be separately fused, preferably with a 5 ampere fusetron. If fusetrons are not available, a 20 ampere fuse may be used temporarily.

4.4 If the power supply is other than that given above, special equipment is required.

ASSOCIATED DRAWING - WD-161 - Conduit Layout and Wiring Diagram

ALTEC SERVICE CORPORATION

SIMPLEX MODERNIZATION,

SOUND EQUIPMENT BULLETIN

REPLACEMENTS OF W.E. SOUNDHEADS

WD-161

ISSUE: 1 6-30-39

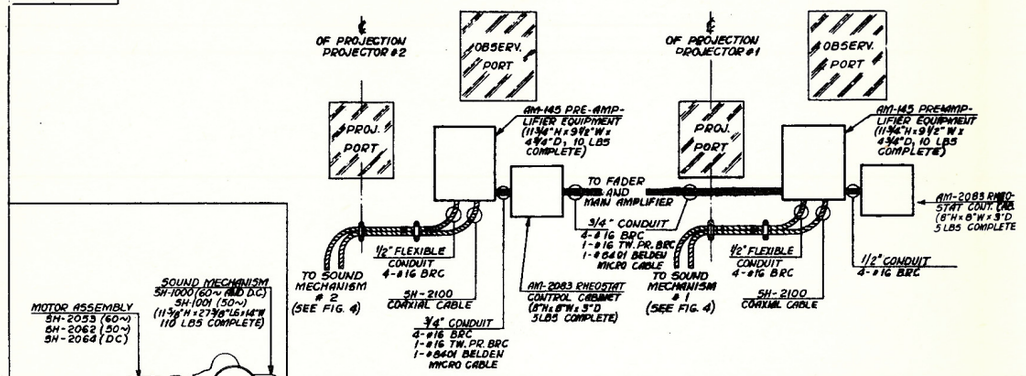

FIG. 1 CONDUIT LAYOUT FOR REPLACEMENT OF W.E. D-SPEC. ATTACHMENTS & 1-A BASES

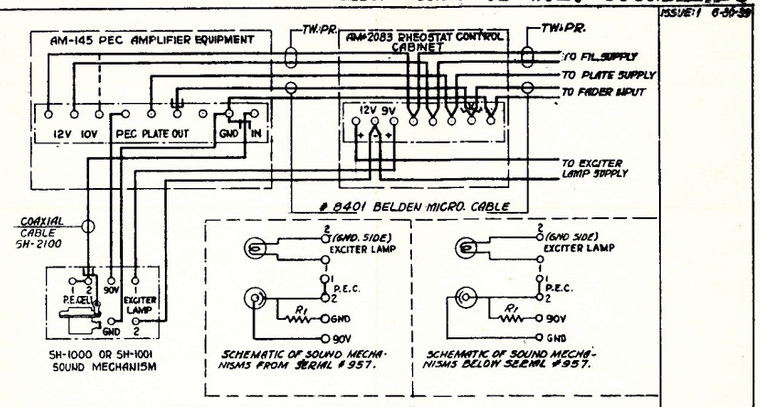

FIG. 1-A WIRING DIAGRAM

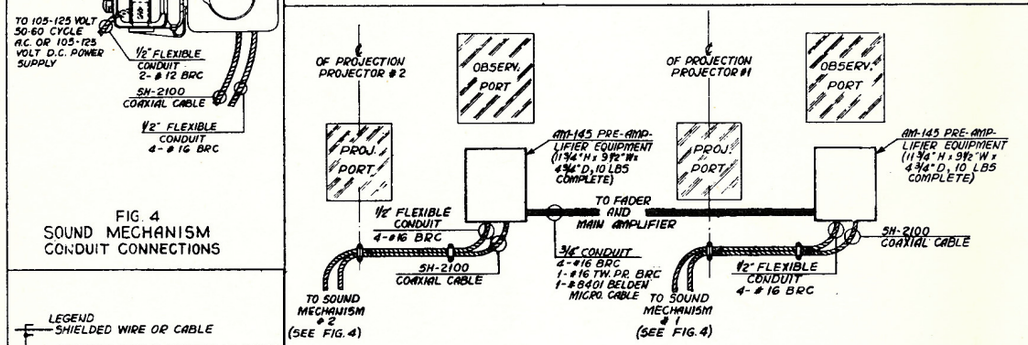

FIG. 2 CONDUIT LAYOUT FOR REPLACEMENT OF W.E. 206 AND 208 REPRODUCER SETS

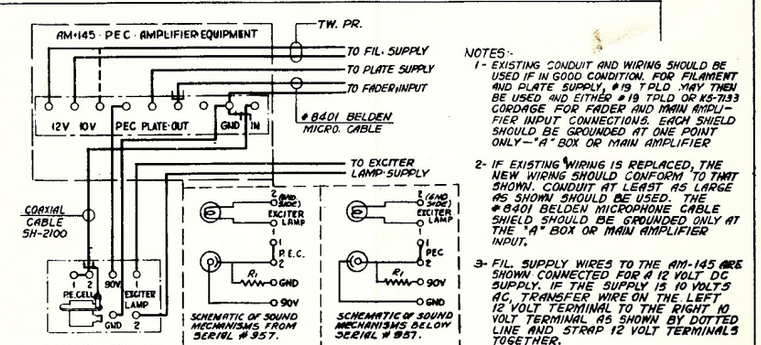

FIG. 2-A WIRING DIAGRAM

NOTES:-

1- EXISTING CONDUIT AND WIRING SHOULD BE USED IF IN GOOD CONDITION. FOR FILAMENT AND PLATE SUPPLY, #19 TPLD MAY THEN BE USED AND EITHER #19 TPLD OR K5-7133 CORDAGE FOR FADER AND MAIN AMPLIFIER INPUT CONNECTIONS. EACH SHIELD SHOULD BE GROUNDED AT ONE POINT ONLY—"A" BOX OR MAIN AMPLIFIER

2- IF EXISTING WIRING IS REPLACED, THE NEW WIRING SHOULD CONFORM TO THAT SHOWN. CONDUIT AT LEAST AS LARGE AS SHOWN SHOULD BE USED. THE #8401 BELDEN MICROPHONE CABLE SHIELD SHOULD BE GROUNDED ONLY AT THE "A" BOX OR MAIN AMPLIFIER INPUT.

3- FIL. SUPPLY WIRES TO THE AM-145 ARE SHOWN CONNECTED FOR A 12 VOLT DC SUPPLY. IF THE SUPPLY IS 10 VOLTS AC, TRANSFER WIRE ON THE LEFT 12 VOLT TERMINAL TO THE RIGHT 10 VOLT TERMINAL AS SHOWN BY DOTTED LINE AND STRAP 12 VOLT TERMINALS TOGETHER.

4- WIRES NOT OTHERWISE DESIGNATED, ARE #16 BRC.

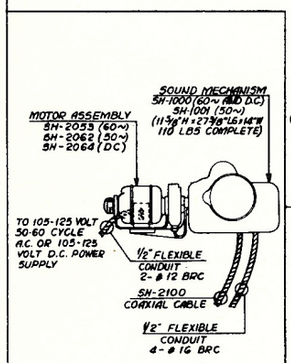

FIG. 4
SOUND MECHANISM
CONDUIT CONNECTIONS

LEGEND
SHIELDED WIRE OR CABLE

CONNECT SHIELD EXACTLY AS SHOWN TO AVOID LOOP GROUND AND NOISE

COAXIAL CABLE-SHIELD IS GROUNDED ONLY IN AM-145 PRE-AMPLIFIER EQUIPMENT

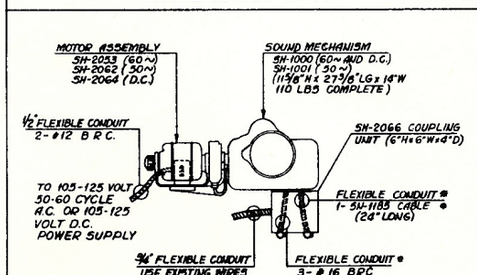

* TWO FLEXIBLE CONDUITS, 4 CONNECTORS & 1 SH-1185 CABLE ARE PACKED IN SH-2073 SOUND MECHANISM ACCESSORIES

FIG. 3 CONDUIT LAYOUT FOR REPLACEMENT OF W.E. 209 AND 211 REPRODUCER SETS

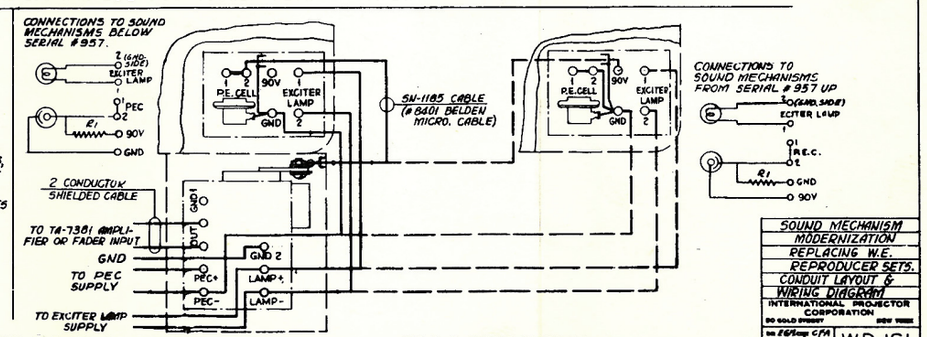

FIG. 3-A WIRING DIAGRAM

SOUND MECHANISM MODERNIZATION REPLACING W.E. REPRODUCER SETS. CONDUIT LAYOUT & WIRING DIAGRAM

INTERNATIONAL PROJECTOR CORPORATION

WD-161

Issued by Engineering Department
Printed in U.S.A.

1. DESCRIPTION.

The AM-2069 consists of a three-position selector switch and knob, two single circuit jacks and four resistors on a mounting plate. A cable form is provided for external connections. When mounted in an AM-101 Volume Control Amplifier it selects any one of three inputs: film in middle position, microphone in left position (500,000 ohms) and phonograph in right position (500 ohms).

2. INSTALLATION.

The AM-2069 should be installed in one of the AM-101 Volume Control Amplifiers in place of the nameplate on the cover, per the sketch at the right, using the present mounting screws, nuts and washers. Change R_1 or R_3, if required, to match phonograph or microphone impedance.

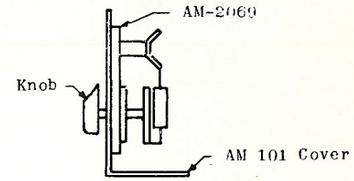

The AM-101, in which the AM-2069 is installed, should be modified and AM-2069 connections made to it as shown in the sketch at the right. Note that R_1 and the existing VT_1 grid lead are removed. The new grid lead is the green wire in the AM-2069 cable form, and should be routed to VT_1 between the cover and the chassis.

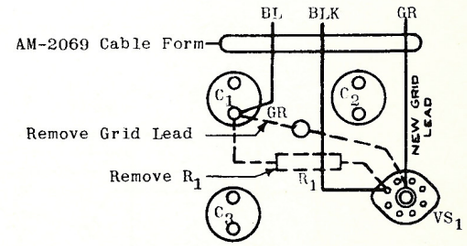

The special inputs may be plugged into the jacks provided, or for a permanent installation these inputs may be connected to terminals 1 & 6 (Microphone) and 1 & 7 (Phonograph) as shown. Flexible shielded cable should be used and installed so that it does not interfere with the opening and closing of the cabinet door.

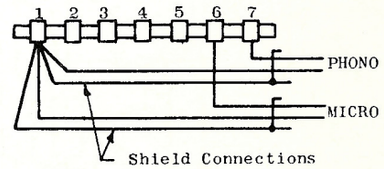

3. OPERATION

A. **Film Reproduction.** Set the selector switch in "Film" position. System operation is normal and the special inputs are disconnected.

B. **Microphone or Phonograph Reproduction.** Set the selector switch in left or right position respectively. Also set the changeover switch in the same cabinet so that the associated AM 1000 Volume Control Amplifier is operative (pilot lamp lighted). If plug connections are used, be sure the plug is in the jack. With the switch in either left or right position, the associated sound mechanism is inoperative.

4. ASSOCIATED DRAWING.

Wd-154 Schematic and Wiring Diagram.

AM-2069 N.S. - ANN.
SWITCHING ATTACHMENT

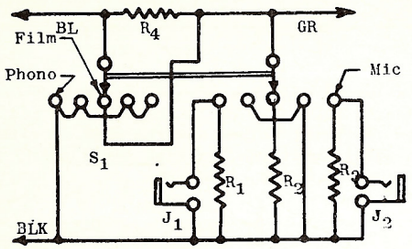

SCHEMATIC

DESIG.		ITEM
J_1-2	SN-610	Jack
R_1	SN-1030	Resistor 500 ohms 1 Watt
R_2)		
R_3)	SN-539	Resistor 500,000 ohms
R_4)		1 Watt
S_1	SN-1063	Switch
TS_1	SN-571	Terminal Strip

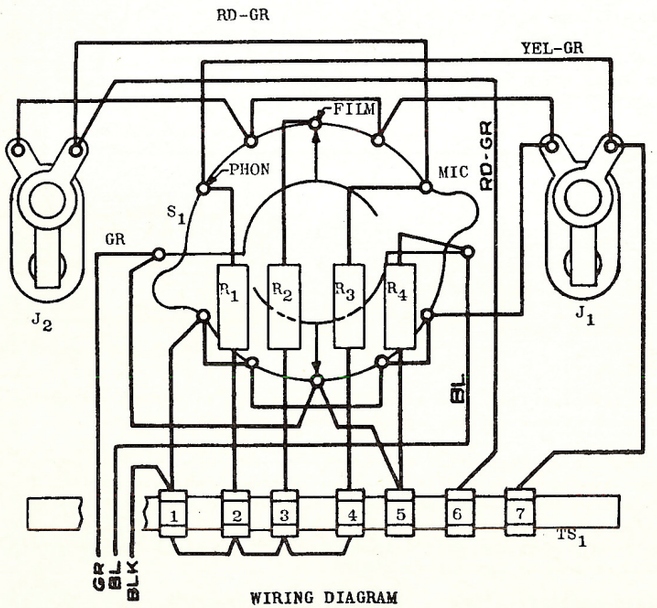

WIRING DIAGRAM
(WD-154)

1. INSTALLATION

1.1 When AM-2069 N.S.-Ann. Switching Attachment is installed in AM-101 equipped with two AM-1000 Amplifiers, the following wiring changes should be made.

(a) Change the wiring in each AM-1000 per the Equipment Bulletin "AM-2069 N.S.-Ann. Switching Attachment"; i.e., remove R_1 and VT_1 grid lead.

(b) Referring to Figure 1 of Equipment Bulletin "AM-101 Volume Control Amplifier ..... With two AM-1000 Volume Control Amplifiers", Addendum #1, Issue #1, omit the strap from C_1 AM-1000 #1 to C_1 AM-1000 #2.

(c) Connect the AM-2069 to AM-1000 #1 per the instructions.

(d) Connect the AM-2069 green grid lead to VT_1 grid cap in AM-1000 #1, and the green jumper to VT_1 grid cap in AM-1000 #2.

(e) Strap terminals per Figure 2 of Equipment Bulletin "AM-101 Volume Control Amplifier With Two AM-1000 Volume Control Amplifiers".

(f) Make external connections to the terminal strips per the system wiring diagram.

1.2 These wiring changes are necessary to permit operation of the AM-2069 with either of the AM-1000 Volume Control Amplifiers in the cabinet, and differ slightly from the changes shown in Figure 2 of Equipment Bulletin "AM-101 Volume Control Amplifier With Two AM-1000 Volume Control Amplifiers".

INSTALLATION

SECTION 1

A. GENERAL

The NTS-100 System includes one; the NTS-200, two; the NTS-300, three; and the NTS-400, four NTS-1150 Power Amplifiers. The NTS-1150 Amplifier is mechanically and electrically interchangeable with the NTS-1125 Amplifier.

There are three versions of each of these systems, as follows:

NTS-100, 200, 300, 400 No Ramp Control Cabinet
NTS-100, 200, 300, 400 with NTS-81 Control Cabinet
NTS-100, 200, 300, 400 with LU-3016 Control Cabinet

B. SPACE REQUIREMENTS

1. Projection Room

   a. For two projectors only, this room should be at least 14 feet wide (parallel to the screen), 10 feet deep and 8 feet high. Larger Projection Rooms are desirable where space permits.

      NOTE: Additional space is needed for a third projector or if a rewind table, power conversion equipment or other auxiliary equipment is in the Projection Room.

   b. Any local, city or state ordinances governing the size of the Projection Room and the clearance around the projectors supersede the above recommendations.

2. Power Conversion Equipment

   a. The rectifiers or motor generator set, supplying the direct current for the arc lamps, should be located in a separate room whenever possible.

   b. Good ventilation in this room is essential in view of the heavy power rating of this equipment.

C. POWER REQUIREMENTS

1. For the power conversion equipment, the power supply to the Projection Room should be nominal 220 volts AC, 60 cycles, 3-phase. The consumption of typical power conversion equipment is listed in the table below.

2. For the Sound Equipment, the power supply in the Projection Room should be 105-125 volts AC, 60 cycles ±3 percent.

3. Power consumption of power conversion equipment and sound equipment is tabulated below.

Equipment	Power Required Each Unit	Power Factor
NTS-1150 Amplifier	400 Watts	86%
PU-1005 Power Unit	85 Watts	90%
PU-1008 Power Supply	2700 Watts	90%
1 Sound Mechanism Motor Starting	2300 Watts	-
1 Sound Mechanism Motor Running	155 Watts	-
HI-70/140 Arc Generator	7-1/2 HP	-
HT-135/270 Arc Generator	30 HP	-

D. MATERIAL SUPPLIED BY THE CUSTOMER

1. The customer furnishes all electrical conduit and wiring and associated material required for the installation of the sound system.

2. Existing conduit may be used if suitable. Condulets are recommended so that wires may be pulled readily.

3. The estimated underground cable requirements for a typical Drive-In Theatre is given in the following table. This estimate is based on the Speaker Posts being 19 feet apart on ramps that are 40 feet center to center with an included angle of 80 degrees for the ramp area.

Issued by
Engineering Department
Printed in U. S. A.

February 15, 1957
Issue #1

NOTE: In theatres having dome lights and more than eleven ramps, all underground cable is No. 12 single conductor.

UNDERGROUND CABLE REQUIREMENTS

Number of Ramps	Number of Cars (Approx.)	SOUND AND LIGHTS #14-2 Cable Feet	SOUND AND LIGHTS #12-1 Cable Feet	SOUND ONLY #14-2 Cable Feet
5	156	3,000	3,500	3,000
6	208	4,000	4,500	4,000
7	266	5,000	5,000	5,000
8	330	6,000	6,000	6,000
9	400	7,000	7,500	7,000
10	476	8,500	8,500	8,500
11	558	10,000	10,000	10,000
12	646	-	34,500	11,500
13	742	-	39,000	13,000
14	844	-	45,000	15,000
15	952	-	52,000	17,000
16	1,066	-	56,000	19,000
17	1,186	-	63,000	20,500
18	1,312	-	67,500	23,000
19	1,444	-	73,000	26,000
20	1,582	-	78,500	28,500
21	1,726	-	84,000	31,000
22	1,876	-	90,000	34,000
23	2,032	-	95,000	37,000

E. CONDUIT AND WIRING

1. Conduit sizes should be as specified in the associated conduit layout and conduit runs should be as short as possible.

   NOTE: When dome lights are not used, the PU-1008 Power Supply and the associated conduit and wiring are not required.

2. Wire sizes and connections should be in accordance with the associated wiring diagram. Splices should be made only when specified.

3. Sound Circuits to Ramps.

   a. Connect no more than 500 In-A-Car speakers to each Amplifier.

   b. Connect the same number of In-A-Car speakers to each Ramp Control Panel Switch (when installed) insofar as practical. The wiring becomes complicated if one circuit serves a part of more than one ramp.

   c. Plan sound cable runs so that all Ramp Control Switches are used.

   d. Run one sound circuit to each of the shorter ramps and two to each of the longer ramps and continue the sound circuit from post to post along the ramp.

   e. The ramp wiring shown in the associated wiring diagram is for a typical average theatre. Modification may be necessary to meet specific conditions.

      NOTE: While the wiring associated with the PU-1008 Power Supply is not required when dome lights are not used, it is recommended that light cables be laid initially, if the addition of lights is anticipated in the future.

4. Lighting Circuits

   a. Plan cable runs so that the same number of dome lights, insofar as practical, but not more than 126, are connected to each of the three transformers in the PU-1008 Power Supply.

      NOTE: The lighting circuit is of the balanced type, shown schematically in Figure 1. The number of dome lights on each side of the circuit, 63 maximum, must be the same. The wiring becomes complicated if more than one circuit serves any half of a ramp.

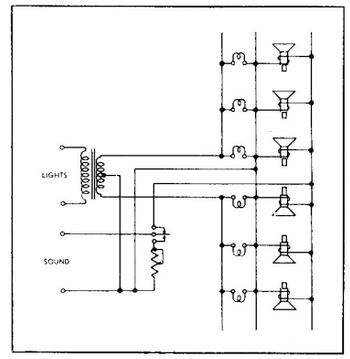

FIGURE 1

b. Cable runs should be as direct as possible to avoid unnecessary line loss.

c. Run one lighting circuit (2 wires) from each transformer in the PU-1008 to the ramps per the associated wiring diagram.

NOTE: While one lighting circuit may serve several of the shorter ramps, the number of ramps served by one circuit decreases as the length of the ramp increases.

d. Continue one of the wires of each lighting circuit from post to post in one half of each of the ramps served by that circuit and the other wire in the same manner in the other half of the same ramps.

NOTE: When connections are properly made, the dome lights are connected between one lighting circuit wire and the sound common, but because of the balanced circuit, no current flows in the sound common.

F. EQUIPMENT MOUNTING

1. Projection Room Equipment

a. All wall mounting equipment, outlet boxes and condulets should be fastened to brick or concrete walls with bolts and expansion shields, to tile walls with toggle bolts and to gypsum block or transite walls with through bolts.

b. Equipment Mounted on Projection Room Front Wall

The changeover switches should be located for convenient changeover at each projector and the AM-141 Volume Control Amplifier so that the system volume control is readily accessible. An AM-2082 Extension Volume Control should be installed so that the volume may be conveniently adjusted at the right projector.

c. Equipment Mounted on the Projection Room Rear or Side Wall

This equipment should be so located that all controls are readily accessible and visible from the operating position at each projector and conduits may be run readily to the ramp cable vault. There should be at least three feet clearance in front for inspection and servicing.

2. In-A-Car Speaker Posts

They should be rigidly mounted. Concrete footing is recommended.

NOTE: Two inch galvanized pipe is recommended for speaker posts. If not available, 1-1/2 inch galvanized pipe may be used, in which case H-3716 Casting Set Screws should be obtained from a National Theatre Supply Branch and substituted for those furnished with the coupling units.

3. Coupling Units and In-A-Car Speakers

a. Slide the P-3546 Coupling Unit Casting over the top of the 2" post with the H-3715 Casting Set Screw facing away from the drive-in screen and tighten the set screw sufficiently to hold the casting in position.

NOTE: If a 1-1/2" post is used, obtain H-3716 Casting Set Screws from a National Theatre Supply Branch and substitute.

b. Slide the G-2542 Terminal Strip Assembly into the grooves in the casting, with the dome light over the 1" hole. Connect the external dome light supply and sound wires.

c. Hang the two In-A-Car Speakers on the coupling Unit, and feed the speaker cords through the holes in the bottom of the casting.

d. Tie a strain relief knot in each speaker cord, leaving sufficient slack so that there will be no strain on the conductor when connections are made to the speaker terminals. Connect the conductors per the associated installation drawings.

e. Slide the P-2815 Dome Retaining Clips into the square holes in the coupling unit casting with the open section upward. Depress the small projection on each clip to obtain the position shown before the dome is installed.

f. Place the P-3545 Coupling Unit Dome on the casting and press the clips inward until they snap and hold the dome firmly in position.

NOTE: To remove the dome, depress the small projection on each spring clip with a screwdriver and slide both clips outward.

OPERATION AND MAINTENANCE

SECTION II

1. Sound Mechanism

a. Daily Lubrication

(1) Projector Drive Gear with Regular, Super-Simplex or E-7 Projector Mechanisms. - Fill oil cup on non-operating side with Simplex Projector Oil.

(2) Gear Box. - Add Simplex Sound Mechanism Oil, as required to maintain oil level at top of oil cup.

b. Monthly Lubrication

(1) Pad Rollers. - Apply one drop of Simplex Projector Oil to the oil hole in each Pad Roller and rotate to distribute the oil.

(2) Lateral Guide Roller

(a) Apply one drop of Simplex Projector Oil to the shaft at each end of the felt roller and rotate the flanges to distribute the oil.

(b) Apply one drop of Simplex Projector Oil to the pivot, at each end of the roller bracket and rotate the bracket to distribute the oil.

(c) Slide the assembly inward and apply one drop of Simplex Projector Oil to the stud. Open and close the assembly to distribute the oil.

(3) Drive Motor. - Give each grease cup about 1/2 turn, but do not force too much grease into the bearings. Refill with Simplex Rear Shutter Grease, as required.

c. Semi-Annual Lubrication

(1) Rotary Stabilizer Drum Shaft. - Remove rotary stabilizer and two ball bearing retainer rings, apply one drop of Simplex Projector Oil to each ball bearing. Reassemble and rotate to distribute the oil.

(2) Lateral Guide Roller. - Apply one drop of Simplex Projector Oil to each ball bearing and rotate to distribute the oil.

(3) Projector Drive Gear with X-L Projector Mechanisms. - Apply one drop of Simplex Projector Oil to each ball bearing.

d. Annual Lubrication. - Every twelve months, drain out all oil in the gear box. Fill slowly on the non-operating side with Simplex Sound Mechanism Oil (1-1/2 oz. required) to the top of the oil cup while the mechanism is idle.

CAUTION: Add oil only when the mechanism is idle. Oil is taken up by running gears, but will drain into the bottom of the gear box when the mechanism is idle and the oil level may be too high. There may be leakage around the bearings.

e. Exciter Lamp, Photoelectric Cell, Reflector Lens and Lens Tube Lenses. - Clean carefully each day with lens tissue. Be sure that all dirt, oil and finger prints are removed.

f. Sprockets. -

1. Examine each sprocket carefully for foreign material, wear, under-cutting and looseness.

2. Clean, tighten or replace per Section III, paragraph A, 5.

g. Film Compartment. - Clean daily with a clean cloth.

h. Photoelectric Cell - Check the spot of light daily.

NOTE: The spot should be approximately 7/16" in diameter and centered on the cathode. Readjust per Section III, paragraph A, 9, if necessary.

i. Lateral Guide Roller Assembly

1. Check adjustment periodically and readjust per Section III, paragraph A, 5 as required.

NOTE: The spring at the rear should hold the assembly in firm contact with the knurled nut. In some instances, it may be pushed inward when the guide roller is closed, after film is threaded, and may not return to normal position due to friction. A few drops of Simplex Projector Oil applied to the stud should avoid this condition. Sprocket hole noise will result and cannot be remedied by adjustment until the tendency to stick is eliminated.

2. Clean the felt roller carefully with carbon tetrachloride each month. Inspect for flat spots and replace per Section III, paragraph A, 5, if necessary, as flat spots cause flutter.

3. Inspect the flanges each month and if scored, replace per Section III, paragraph A, 5, otherwise flutter will develop.

j. Pad Rollers

1. Clean carefully, inspect for scoring, adjust to relieve binding or if required, replace per Section III, paragraph A, 4.

2. Check the pad roller adjustment per Section III, paragraph A, 4.

2. Amplifier Equipment

a. Set each power amplifier and power unit AC switch or the master switch in "ON" position and allow the units to warm up for at least five minutes.

NOTE: The pilot light on each amplifier and PU-1008 Power Supply (when installed) and one of the exciter lamps should be bright.

b. When one NTS-86 Amplifier Cabinet is installed, set the monitor selector switch in position "1" and "2" successively, to test the sound from each amplifier.

NOTE: If amplifier #2 is for standby, it is disconnected when the amplifier selector switch is in position "1-2". Therefore, to test the sound from amplifier #2, set the amplifier selector switch on "2" when the monitor selector switch is on "2".

c. When two NTS-86 Amplifier Cabinets are installed, set the amplifier selector and monitor selector switches as follows to test the sound from each amplifier.

Power Amplifier Combination	NTS-86 Amplifier Cabinet No. 1 Amplifier Selector Switch Position	NTS-86 Amplifier Cabinet No. 1 Monitor Selector Switch Position	NTS-86 Amplifier Cabinet No. 2 Amplifier Selector Switch Position	NTS-86 Amplifier Cabinet No. 2 Monitor Selector Switch Position	Tests Sound From Amplifier
2 Regular	1-2	1	1-2	OFF	#1
1 Standby	1-2	2	1-2	OFF	#2
	2	OFF	1-2	1	#3
3 Regular	1-2	1	1-2	OFF	#1
No Standby	1-2	2	1-2	OFF	#2
	1-2	OFF	1-2	1	#3
3 Regular	1-2	1	1-2	OFF	#1
1 Standby	1-2	2	1-2	OFF	#2
	1-2	OFF	1-2	1	#3
	1-2	OFF	2	2	#4
4 Regular	1-2	1	1-2	OFF	#1
No Standby	1-2	2	1-2	OFF	#2
	1-2	OFF	1-2	1	#3
	1-2	OFF	1-2	2	#4

3. Emergency Procedure

a. Exciter Lamp Out - Replacement of the lamp should restore sound.

b. Inoperative Power Amplifier.

(1) An NTS-86 Amplifier Cabinet, which includes an amplifier selector switch, is provided to house each pair of power amplifiers in those installations requiring two or more power amplifiers.

(2) The three-position amplifier selector switch provides for the transfer of the In-A-Car speaker load from an inoperative amplifier to an operative amplifier.

(3) The normal setting of this switch is position "1-2". The positions for emergency operation for the several amplifier combinations are tabulated below.

Power Amplifier Combinations	NTS-86 Amplifier Cabinet No. 1 Inoperative Amplifier	NTS-86 Amplifier Cabinet No. 1 Switch Position	NTS-86 Amplifier Cabinet No. 2 Inoperative Amplifier	NTS-86 Amplifier Cabinet No. 2 Switch Position
1 Regular 1 Standby	#1	"2"	-	-
2 Regular	#1 #2	"2" "1"	-	-
2 Regular 1 Standby	#1 #2	"2" "1"	Switch should remain in Position "1-2"	
3 Regular	#1 #2	"2" "1"	#3	"2"
3 Regular 1 Standby	#1 #2	"2" "1"	#3	"2"
4 Regular	#1 #2	"2" "1"	#3 #4	"2" "1"

c. Sound Circuits to Ramps defective.

(1) There is a remote possibility that a short circuit may develop in one circuit and affect all others.

(2) Turn the ramp control switches "OFF" progressively. The switch that restores sound is in the defective circuit.

(3) Leave it "OFF" until the trouble is corrected, and turn the other switches "ON".

ADJUSTMENTS AND REPLACEMENTS

SECTION III

A. SOUND MECHANISM

1. Mounting on Projector Mechanism.

a. The sound mechanism components (main frame with rear guard attached, motor assembly and damping wheel) are shipped separately.

b. Soundhead Support.

(1) Remove all existing equipment from the projector pedestals, or in new installations position the pedestals properly with respect to the projection port.

NOTE: There should not be less than 6" clearance between the front of the sound mechanism and the front wall.

(2) Mount the soundhead support (selected from the following table) on each Simplex pedestal.

PEDESTAL	SOUNDHEAD SUPPORT
Type L	SN-483
Type LL-4, LL-5 or LL-6	S-1183-L

NOTE: National Theatre Supply Branches have information regarding the soundhead supports required for other pedestals.

3. Main Frame

(1) Insert two H-2647 Soundhead Support Fastening Screws, with two P-2792 Washers, in the upper holes in the main frame.

(2) Position the main frame on the soundhead support with the two screws in the slotted holes in the soundhead support.

(3) Insert two similar screws, with washers, in the two lower holes in the soundhead support and tighten all screws securely.

d. Motor Assembly

(1) Remove the motor cover as follows:

(a) Disengage the front and loosen the rear motor cover fastening wing screws.

(b) Slide the motor cover forward and upward and remove.

(2) Remove the four motor fastening bolts, nuts and washers, the two motor switch bracket fastening screws and the motor, including the switch, from the bracket.

(3) Mount the motor bracket on the front of the main frame with four H-2646 Bracket fastening bolts.

(4) Slide the flywheel on the motor shaft with its keyway in line with the key on the motor shaft (remove tape from key) and fasten with the two P-2788 Flywheel Locking Nuts.

(5) Position the motor on the bracket with its shaft in alignment with the flexible coupling on the gear box drive shaft and slide the shaft into the coupling.

NOTE: Slotted holes are provided in the motor cradle for lateral alignment and clearance holes in the motor bracket for vertical alignment.

(6) Secure the motor with the motor fastening bolts and tighten the motor coupling set screws.

(7) Mount the motor switch and bracket.

Issued by
Engineering Department
Printed in U. S. A.

February 15, 1957
Issue #1

(8) Turn the motor over by hand and, if necessary, readjust the motor bracket vertically and the motor laterally to obtain exact alignment.

(9) Be sure that all bolts and set screws are tightened when alignment is obtained.

(10) Install the motor cover making sure that the lips on the bottom, at the rear of the cover, are under the cover clamping bar. Align the cover with the main frame and tighten the rear and front wing screws.

e. Lower Magazine

(1) Bolt the lower magazine to the bottom of the sound mechanism, fastening the P-2938 Cable Clamp Bracket by means of one of the magazine fastening screws.

NOTE: After connections to the sound mechanism have been made, fasten the flexible cable to the bracket with a suitable cable clamp, so that it does not interfere with the takeup drive belt.

f. Takeup Belt.

(1) Adjust the length as required and close with the belt hook supplied.

(2) Slide over the pulleys on the takeup and on the sound mechanism.

g. Rotary Stabilizer

CAUTION - The G-2002 Rotary Stabilizer is shipped separately and should be unpacked, handled and installed carefully to prevent damage. It is suggested that it be installed only after the installation of the projection equipment has been completed and the flexible conduit and wiring connected to the sound mechanism.

The installation procedure given below should be followed carefully in order to insure proper installation and operation of the rotary stabilizer, especially with regard to end play. Too much end play will cause weaving of the scanning drum and result in sprocket hole and frame line noise.

(1) Remove the Rear Guard.

(2) Remove the P-2305 Screw and H-3202 Nut from the drum shaft on the non-operating side of the sound mechanism and discard the nut.

NOTE: The two loose spring washers on the shaft should not be removed.

(3) Unpack the rotary stabilizer carefully and make sure that all foreign material is removed from the mounting hole.

(4) Slide the rotary stabilizer carefully on the shaft, and line up the mounting holes in the shaft and rotary stabilizer flange.

NOTE: Be sure to hold the scanner drum against its shoulder on the operating side of the mechanism.

(5) Insert the screw, removed under paragraph g, (2), above, in the counterbored hole in the flange and tighten securely.

(6) Check the assembly for end-play by sliding the rotary stabilizer and drum shaft toward the operating side as far as it will go and releasing it. If the drum shaft does not return and seat firmly against its shoulder, there is too much end play.

NOTE: The spring washers should hold the scanner drum firmly against its shoulder, that is, the spring washers should be under compression at all times.

(7) Remove the rotary stabilizer, reverse one of the spring washers and replace the stabilizer. This will increase the effectiveness of the washers and should give the proper end play.

h. Rear Guard

Position on the non-operating side of the main frame and tighten the thumb screws securely.

2. Mounting the Projector Mechanism

a. Remove the two H-2619 Mechanism Bar Fastening Screws, P-2331 Washers and the P-2396 Mechanism Bar from the top of the sound mechanism.

b. Fasten the mechanism bar to the projector mechanism with the two H-1511 Mechanism Fastening Screws. The "F" on the bar should be at the front.

NOTE: When Regular, Super Simplex or E-7 Projector Mechanisms are installed, an SH-2106 Oil Drainage Kit is required. An oil shield is not required with Simplex X-L Projectors.

c. Mount the projector mechanism (and mechanism bar) on the sound mechanism with the two mechanism bar fastening screws finger tight.

d. Loosen the mechanism bar adjustment locking nut and turn the mechanism bar adjusting screw so that there will be no gear interference during installation of the projector drive gear assembly.

e. Install the G-2086 Main Drive and Idler Gear Assembly when the Simplex X-L Projector Mechanism is used, in accordance with the Instruction Manual for this mechanism.

f. The projector drive assemblies, required with other Simplex projector mechanisms are tabulated below.

MECHANISM	DRIVE ASSEMBLY
Regular	SH-1014
Super Simplex	SH-1014
Simplex E-7	SH-1015

NOTE: National Theatre Supply Branches have information regarding projector drive assemblies required when other projector mechanisms are used.

3. Exciter Lamp Bracket

a. Adjustment

(1) For vertical adjustment, loosen the vertical adjustment clamping screw on the left of the bracket and turn the vertical adjusting screw as required.

(2) For lateral adjustment, loosen the lateral adjustment lock nut and turn the screw as required.

NOTE: Tightening the screw moves the bracket outward. Loosening the screw permits the bracket to bs slid forward.

4. Gear Box

a. Gear Box Removal

(1) Loosen the two mechanism bar fastening screws.

(2) Loosen the mechanism bar adjusting screw locking nut and turn the adjusting screw inward so that the sound mechanism drive gear and the idler gear are out of mesh.

(3) Loosen the front and rear motor cover fastening wing screws, slide the motor cover forward and upward and remove.

(4) Loosen the two motor coupling set screws.

(5) Remove the four motor fastening bolts and slide the motor from the motor bracket.

(6) Remove the four gear box mounting screws and the gear box.

(7) Install the replacing gear box and reassemble.

b. Pad Roller Assembly Replacement

(1) Open the pad roller and compress the actuating spring to relieve the spring tension.

(2) Remove the pad roller assembly fastening screw and the pad roller assembly.

(3) Replace parts as necessary, reassemble and adjust the pad roller clearance per the following paragraph.

Issued by
Engineering Department
Printed in U. S. A.
February 15, 1957
Issue #1

c. Pad Roller Replacement

(1) Open the pad roller.

(2) Loosen the pad roller stud set screw in the pad roller arm bracket.

(3) Remove the pad roller stud and pad roller.

(4) Replace parts as necessary and reassemble.

NOTE: Position the pad roller stud so that the pad rollers rotate freely before tightening the set screw.

(5) Adjust the clearance between the pad rollers and sprocket as follows:

(a) Thread two thicknesses of film on the sprocket and close the pad roller.

(b) Loosen the pad roller arm adjusting screw lock nut and position the pad roller arm adjusting screw so that the pad rollers rotate freely.

(c) Tighten the pad roller arm adjusting screw lock nut and check the adjustment.

d. Sprocket Replacement

(1) Open the pad roller

(2) Remove the stripper

(3) Remove the sprocket fastening screw and the sprocket.

(4) Replace parts as necessary and reassemble.

5. Lateral Guide Roller

a. Adjustment

(1) Thread the Academy buzz track film in each projector and sound mechanism. Start the projector and listen for the tones indicative of frame line or sprocket hole noise.

(2) Loosen the locking screw in the center of the knurled adjusting nut, turn the nut as required to eliminate frame line and sprocket hole noise and tighten the locking screw.

NOTE: Clockwise rotation of the knurled nut moves the lateral guide roller inward. Be sure that the spiral spring at the rear, holds the guide roller firmly against the knurled adjusting nut at all times. A drop or two of Simplex Projector Oil on the stud periodically will eliminate any tendency to stick.

b. Lateral Guide Roller Removal

(1) Remove the photo-electric cell shield and the cell.

(2) Remove the two partition plate fastening screws and slide out the partition plate.

(3) Remove the four optical system mounting screws and the optical system.

(4) Loosen the lateral guide roller locking screw, remove the adjusting nut and the lateral guide roller.

NOTE: Be sure that the spiral spring and steel washer remain on the mounting stud.

(5) Install the lateral guide roller, optical system and partition plate.

(6) Adjust the lateral guide roller per Section III, paragraph A, 5,a.

c. Parts Replacements

(1) Remove the lateral guide roller per the previous paragraph.

(2) Remove the cover plate fastening screws and the cover plate.

(3) Remove the ball bearing fastening screw under the cover plate.

NOTE: Use two screw drivers, one to hold the screw at the other end of the shaft.

(4) Slide the felt roller inward and remove the outer bearing, fixed flange, felt roller, adjustable flange, and inner bearing as required.

(5) Replace parts and reassemble.

(6) Adjust the lateral guide roller per Section III, paragraph A, 5,a.

6. Motor

a. Remove the motor cover per Section III, paragraph A, 4,a,(3).

b. Disconnect the wires from the motor.

c. Loosen the motor coupling set screws.

d. Remove the four motor mounting bolts and slide the motor from the bracket. Reinstall the replacing motor, reassemble and reconnect the wires.

NOTE: It is extremely important that the motor shaft be in exact alignment with the coupling. Clearance holes are provided in the motor bracket for vertical adjustment and slotted holes in the motor cradle for lateral adjustment of the motor. These adjustments should be made if necessary.

7. Optical System

a. Adjustment

(1) Thread an Academy 7000 cycle or 9000 cycle test film in each projector and sound mechanism.

(2) Connect a volume indicator across the output of one of the power amplifiers.

(3) Start the projector.

(4) Loosen the lens holder clamping screw and turn the knurled adjusting nut as required until maximum response is read on the volume indicator.

NOTE: The flicker test may be used as an alternative. With the test film threaded as above, place a white card between the film and reflector lens. Turn the motor hand wheel slowly. The film frequency lines will make a definite flicker of light on the card. The optical system is focused when the lines are stationary. If they move downward on the card, the lens tube should be closer to the film, while if they move upward, the optical system should be farther from the film.

(5) Tighten the clamping screw securely when the adjustment is completed.

CAUTION: The azimuth adjustment is made at the factory and should not be disturbed.

b. Optical System Removal

(1) Remove the photo-electric cell shield and photo-electric cell.

(2) Remove the two partition plate fastening screws and the partition plate.

(3) Remove the four optical system mounting screws and the optical system.

(4) Reinstall the replacing optical system and reassemble.

(5) Adjust per the preceding paragraph.

8. Photo-electric Cell

a. Remove the photo-electric cell shield and photo-electric cell and replace.

9. Reflector Lens

a. Adjustment

(1) Loosen the reflector lens clamping screw and rotate the lens carefully until the spot of light is centered on the anode of the photo-electric cell.

Issued by
Engineering Department
Printed in U. S. A.
February 15, 1957
Issue #1

(2) To change the size of the spot of light, move the reflector lens in or out of the bracket as required.

NOTE: The spot of light should be 7/16" in diameter and centered on the anode. If further movement of the reflector lens is required, loosen the two lens holder bracket mounting screws and adjust in the slotted holes as required.

(3) Tighten all screws securely when the adjustment is completed.

b. Replacement

(1) Loosen the reflector lens clamping screw and withdraw the lens.

(2) Install the replacing reflector lens and adjust per the preceding paragraph.

10. Rotary Stabilizer Removal

a. Remove the rear guard.

b. Remove the rotary stabilizer fastening screw and slide the stabilizer carefully from the shaft.
NOTE: The two spring washers should remain on the shaft.

c. Slide the replacing rotary stabilizer on the shaft with the mounting hole in the flange and in the shaft in alignment.

d. Insert the clamping screw in the counterbore in the flange of the stabilizer and tighten.

e. Check the assembly for end play by pushing the scanner drum carefully toward the operating side as far as it will go and release it.

NOTE: The spring washers should hold the scanner drum firmly against its shoulder, that is, the spring washers should be under compression at all times. If the scanner drum does not return and seat firmly against its shoulder, there is too much end play.

f. Remove the rotary stabilizer and reverse one of the spring washers. This will increase the effectiveness of the washers and should give the proper amount of end play.

11. Scanner Drum

a. Remove the rotary stabilizer per Section III, paragraph A, 10 and the spring washers.

b. Remove the reflector lens bracket mounting screws and the bracket.

c. Open the lateral guide roller.

d. On the operating side, slide the scanner drum from its bearings.

e. Install the replacing scanner drum, reassemble and check for end play per the preceding paragraph.

NOTE: It is extremely important that the scanner drum rotate freely and smoothly. If there are any rough spots or lack of freedom of rotation, the assembly should be dismantled and the new scanner drum and ball bearings checked carefully, replacing any parts required.

f. Adjust the reflector lens per Section III, paragraph A, 9.

B. VOLUME CONTROL AMPLIFIER

1. Modification - Connect the 100 mf capacitor, that is shipped with the power amplifier, across the cathode resistor, R3, of the first tube. This change increases the gain of the amplifier nine db.

2. Sound Mechanism Output Balancing - Adjust potentiometer, P2, as required to equalize outputs. P2 varies the potential applied to the photo-electric cells in the two sound mechanisms.

3. Amplifier Removal - Disconnect the cable form wires, from the terminal strip, loosen the amplifier mounting screws and remove the unit.

C. POWER AMPLIFIER

1. Output Transformer (T1) - Strap for 6 ohm output impedance.

2. Power Transformer (T2 and T3) - Set S1 on 125V when the average AC voltage is between 120 and 125 volts. For a power supply between 110 and 120 volts, set S1 on 117 V.

3. Volume Control, R1 - Set in extreme clockwise position (maximum volume). If, however, the normal setting of the main system volume control in the volume control amplifier is well below the midpoint, adjust R1, as necessary, to obtain a normal setting of the main system volume control at approximately midpoint.

4. Bias and Screen Voltage Adjustment - R-26 and R-29 are adjusted before shipment so that the bias is -7.5 to -8.0 volts (pin 1 of V4 to ground) and the screen voltage is 300 (pin 2 of V5 or V6 to ground) with a normal line voltage of 117 volts (S1 on 117V) or 125 volts (S1 on 125V). These voltages should be checked when vacuum tubes (especially V4, V5 or V6) are changed and R-26 and R-29 adjusted as follows, when necessary.

   a. Turn the amplifier off and if the screen voltage is above 300, move the slider of R-29 toward ground. If the screen voltage is below 300 move the slider in the opposite direction.

   b. Turn the amplifier on and adjust R-26 to obtain -7.5 to -8.0 volts from pin 1 at V4 to ground.

   c. Check the voltage from pin 2 of either V5 or V6 to ground.

   d. If this voltage is other than 300, repeat a, b and c until the proper voltage is obtained.

D. RAMP CONTROL CABINETS

1. One or more LU-3016 Ramp Control Cabinets (each containing one or two LU-3018 Ramp Control Panels) or NTS-81 Ramp Control Cabinets may be provided, as desired by the customer and depending upon the size of the theatre.

2. LU-3018 Ramp Control Panel

   a. Divide the ramp load as evenly as possible between the amplifiers by modifying each ramp control panel as required.

   b. Load Resistor Adjustment

      (1) An adjustable resistor is provided for each ramp control switch so that the amplifier load will remain constant regardless of the number of ramps in use.

      (2) Adjust each resistor per the following table.

Speakers Per Circuit	Load Resistor Setting-Ohms
20	100
30	100
40	75
50	60
60	50
70	43
80	38
90	33
100	30
110	27
120	25
130	23

   c. Switch Contact Adjustment

      (1) The switch contact springs should have slight follow on make.

      (2) Adjust the springs carefully, as necessary, to obtain proper contact in both positions.

      (3) Burnish the contacts carefully, if necessary, to remove foreign deposits.

Issued by
Engineering Department
Printed in U. S. A.
February 15, 1957
Issue #1

2. NTS-81 Ramp Control Panel

a. Divide the ramp load as evenly as possible between the amplifier by modifying each ramp control panel, as required.

b. Switch Contact Adjustment.

(1) The switch contact springs should have slight follow on make.

(2) Adjust the springs carefully, as necessary, to obtain proper contact in both positions.

(3) Burnish the contacts carefully, if necessary, to remove foreign deposits.

E. SYSTEM FREQUENCY RESPONSE

1. The frequency response of the system should be adjusted carefully in accordance with the tabulation below to obtain the most pleasing sound reproduction from the In-A-Car speakers.

TYPICAL FREQUENCY RESPONSE

NTS SOUND SYSTEMS

USING MODIFIED AM-141 VOLUME CONTROL AMPLIFIER AND NTS-1125 OR NTS-1150 AMPLIFIER

Curve	EQUALIZATION TERMINAL CONNECTIONS 1 & 2	1 & 3	40	70	130	300	500	1000	2000	3000	5000	7000	8000
a*	Open	.002	-17.4	-15.8	-5.7	+0.8	+1.3	0	-4.2	-8.7	-17	-24.5	-28.5
b	Open	.004	-12.8	-11.8	-2.7	+1.7	+1.8	0	-4.2	-8.7	-17	-24.5	-28.5
c	.27 Meg	.0005 .47 Meg	- 9.4	-10.6	-5	-1.3	-0.7	0	-0.9	-3.6	-11	-18.5	-22.5
d	Open	.006	-10.4	- 9.9	-1.7	+2.0	+2.1	0	-4.2	-8.7	-17	-24.5	-28.5
e	.47 Meg	.0005 .47 Meg	- 8.7	- 9.8	-4.5	-1.2	-0.4	0	-1.4	-4.4	-12	-19.8	-24
f	Open	.0005 .47 Meg	- 6.9	- 8.5	-3.5	-0.6	+0.1	0	-3.1	-6.6	-14.9	-22.5	-26.7
g	.47 Meg	.0002 .47 Meg	- 5.3	- 6	-1.4	+1.7	+1.1	0	-2.9	-6.2	-12.7	-19.5	-23.4
h	Open	.0002 .47 Meg	- 3.9	- 5.4	-0.6	+2	+1.8	0	-3	-6.7	-14	-21.3	-24.7
i	Open	Strapped	- 5.8	- 5.9	-7.5	+2.1	+2	0	-4.2	-8.7	-17	-24.5	-28.5

NOTES

1. The 100 MF Capacitor, shipped as a loose part, should be connected across R-3 in the cathode circuit of first stage of the AM-141 Amplifier. This will provide additional gain of approximately 9 db.
2. AM-141 Volume Control set for 30 db loss.
3. NTS-1125 or NTS-1150 terminated in 6 ohm load.
4. Gain of NTS-1125 or NTS-1150 Amplifier 46.4 db from 5000 ohm input.
5. All measurements made with an Altec ED-35 Test Film. If other Test Films are used, some differences are to be expected.

ASSOCIATED DRAWINGS

			Dwg. No.	
AM-141	Volume Control Amplifier,	Schematic & Wiring Diagram	WD-158	- See Simplex E. B.
LU-3018	Ramp Control Panel,	Wiring Diagram	AS-2190	- See Simplex E. B.
NTS-81	Ramp Control Cabinet,	Schematic	NS-159	- See Page 15
NTS-86	Amplifier Cabinet,	Schematic	NS-207	- See Page 16
NTS-86	Amplifier Cabinet,	Wiring Diagram	NS-208	- See Page 17
NS-1150	Power Amplifier,	Schematic	NS-236	- See Page 18
PU-1008	Power Supply	Schematic & Wiring Diagram	WC-1084	- See Page 19

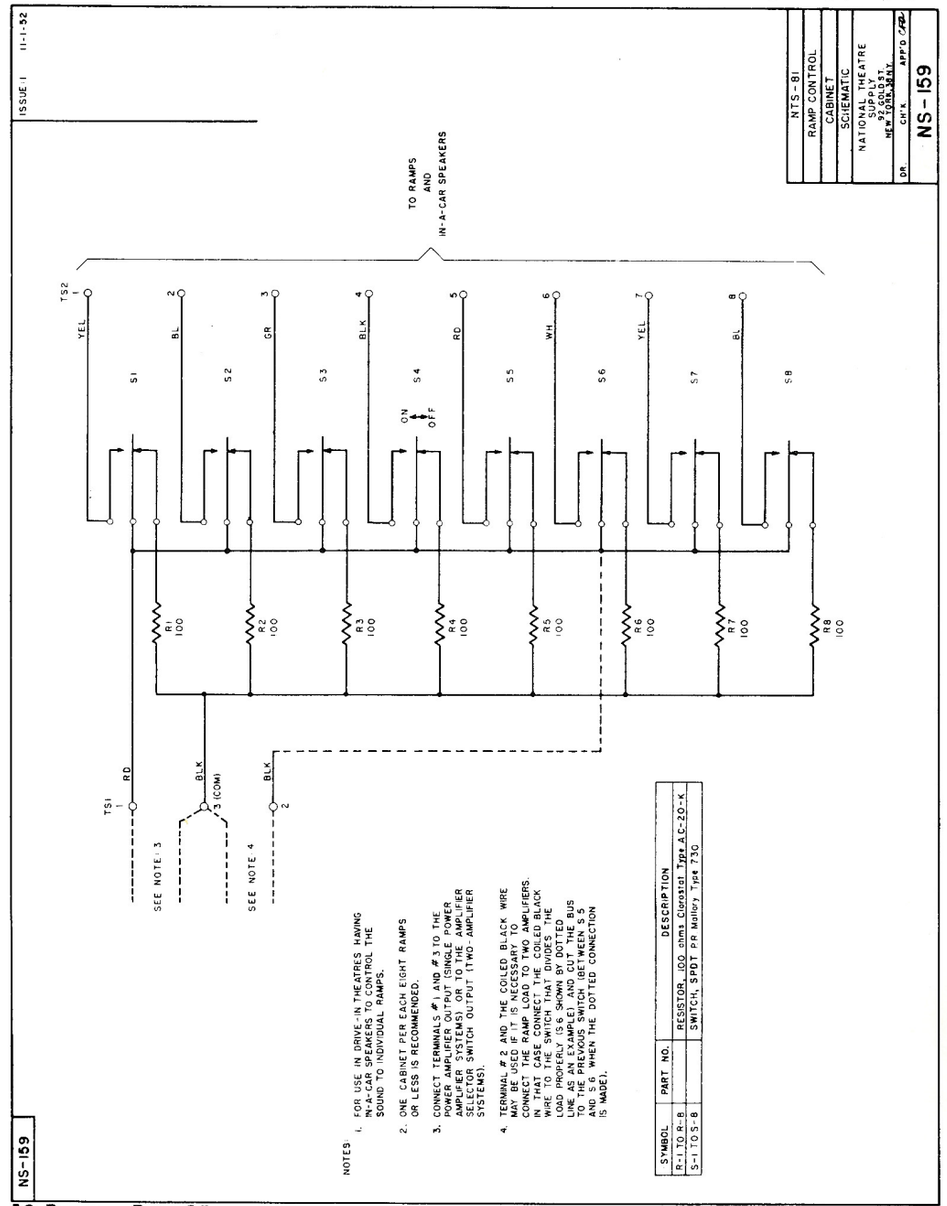
ISSUE 1 11-1-52
NTS-81
RAMP CONTROL
CABINET
SCHEMATIC
NATIONAL THEATRE SUPPLY
92 GOLD ST.
NEW YORK 38, N.Y.
DR.
CH'K.
APP'D
NS-159
TO RAMPS AND IN-A-CAR SPEAKERS
TS2
TS1
YEL
BL
GR
BLK
RD
WH
S1
S2
S3
S4
S5
S6
S7
S8
ON
OFF
R1 100
R2 100
R3 100
R4 100
R5 100
R6 100
R7 100
R8 100
3 (COM)
SEE NOTE 3
SEE NOTE 4
NOTES
1. FOR USE IN DRIVE IN THEATRES HAVING IN-A-CAR SPEAKERS TO CONTROL THE SOUND TO INDIVIDUAL RAMPS.
2. ONE CABINET PER EACH EIGHT RAMPS OR LESS IS RECOMMENDED.
3. CONNECT TERMINALS #1 AND #3 TO THE POWER AMPLIFIER OUTPUT (SINGLE POWER AMPLIFIER SYSTEMS) OR TO THE AMPLIFIER SELECTOR SWITCH OUTPUT (TWO-AMPLIFIER SYSTEMS).
4. TERMINAL #2 AND THE COILED BLACK WIRE MAY BE USED IF IT IS NECESSARY TO CONNECT THE RAMP LOAD TO TWO AMPLIFIERS IN-A-CAR SPEAKERS TO CONTROL THE COILED BLACK WIRE TO THE SWITCH THAT DIVIDES THE LOAD PROPERLY (S6 SHOWN BY DOTTED LINE, AS AN EXAMPLE) AND CUT THE BUS TO THE PREVIOUS SWITCH (BETWEEN S5 AND S6 WHEN THE DOTTED CONNECTION IS MADE).
SYMBOL | PART NO. | DESCRIPTION
R-1 TO R-8 | | RESISTOR, 100 ohms Clarostat Type AC-20-K
S-1 TO S-8 | | SWITCH, SPDT P.R. Mallory, Type 730
NS-159

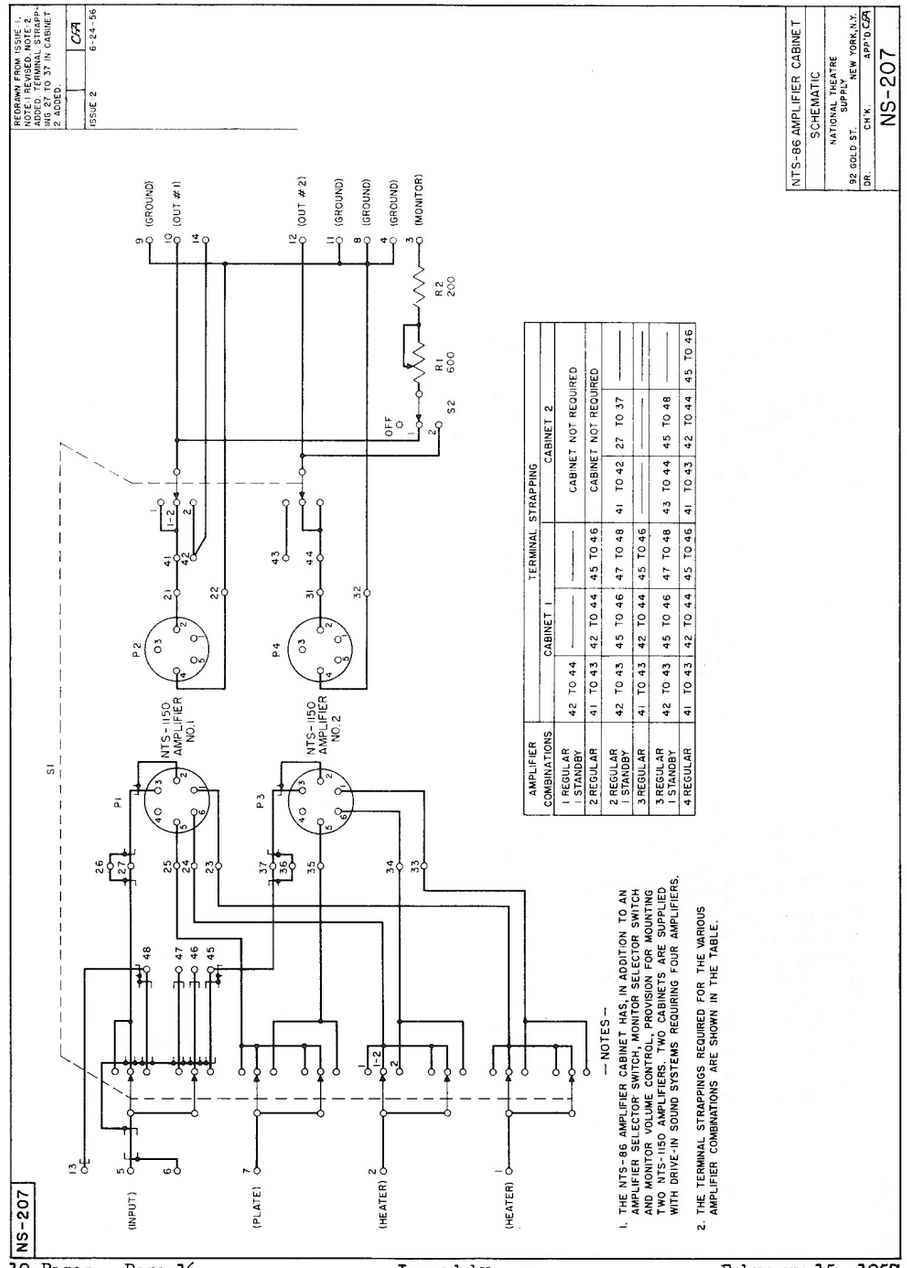
NS-207
NTS-86 AMPLIFIER CABINET
SCHEMATIC
NATIONAL THEATRE SUPPLY
92 GOLD ST. NEW YORK, N.Y.
DR. CH'K. APP'D. CFA
NS-207
REDRAWN FROM ISSUE 1. NOTE 1 REVISED. NOTE 2 ADDED. TERMINAL STRAPPING 27 TO 37 IN CABINET 2 ADDED.
ISSUE 2 6-24-56 CFA
TERMINAL STRAPPING
AMPLIFIER COMBINATIONS
CABINET 1
CABINET 2
1 REGULAR 1 STANDBY 42 TO 44 —— CABINET NOT REQUIRED
2 REGULAR 1 STANDBY 41 TO 43 42 TO 44 45 TO 46 CABINET NOT REQUIRED
2 REGULAR 1 STANDBY 42 TO 43 45 TO 46 47 TO 48 41 TO 42 27 TO 37
3 REGULAR 1 STANDBY 41 TO 43 42 TO 44 45 TO 46 —— —— ——
4 REGULAR 42 TO 43 45 TO 46 47 TO 48 43 TO 44 45 TO 48 ——
4 REGULAR 41 TO 43 42 TO 44 45 TO 46 41 TO 43 42 TO 44 45 TO 46
NTS-1150 AMPLIFIER NO.1
NTS-1150 AMPLIFIER NO.2
P1
P2
P3
P4
S1
S2
OFF
R1 600
R2 200
(GROUND)
(OUT #1)
(OUT #2)
(MONITOR)
(INPUT)
(PLATE)
(HEATER)
(HEATER)
— NOTES —
1. THE NTS-86 AMPLIFIER CABINET HAS, IN ADDITION TO AN AMPLIFIER SELECTOR SWITCH, MONITOR SELECTOR SWITCH AND MONITOR VOLUME CONTROL, PROVISION FOR MOUNTING TWO NTS-1150 AMPLIFIERS. TWO CABINETS ARE SUPPLIED WITH DRIVE-IN SOUND SYSTEMS REQUIRING FOUR AMPLIFIERS.
2. THE TERMINAL STRAPPINGS REQUIRED FOR THE VARIOUS AMPLIFIER COMBINATIONS ARE SHOWN IN THE TABLE.

NS-208

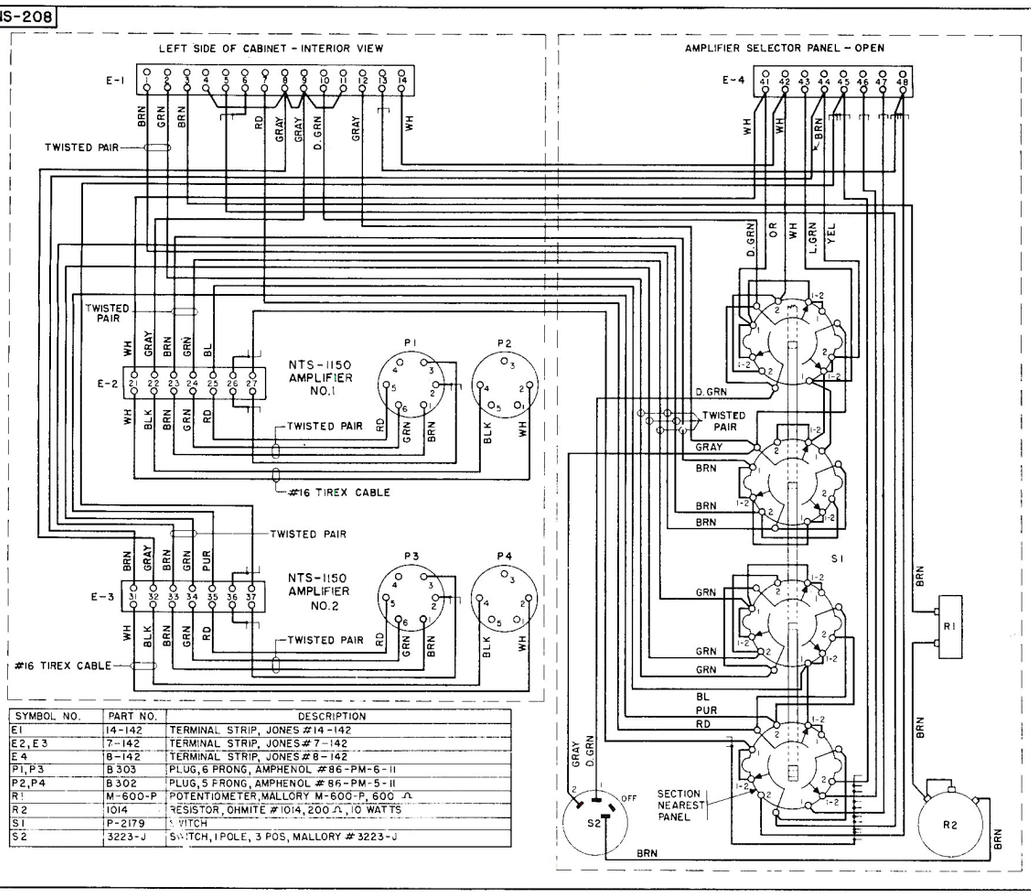

SYMBOL NO.	PART NO.	DESCRIPTION
E1	14-142	TERMINAL STRIP, JONES #14-142
E2, E3	7-142	TERMINAL STRIP, JONES #7-142
E4	8-142	TERMINAL STRIP, JONES #8-142
P1, P3	B 303	PLUG, 6 PRONG, AMPHENOL #86-PM-6-11
P2, P4	B 302	PLUG, 5 PRONG, AMPHENOL #86-PM-5-11
R1	M-600-P	POTENTIOMETER, MALLORY M-600-P, 600 Ω
R2	1014	RESISTOR, OHMITE #1014, 200 Ω, 10 WATTS
S1	P-2179	SWITCH
S2	3223-J	SWITCH, 1 POLE, 3 POS, MALLORY #3223-J

REDRAWN FROM ISSUE 1
COLOR CODING REVISED.
ISSUE 2 6-24-56

NTS-86
AMPLIFIER CABINET
WIRING DIAGRAM
NATIONAL THEATRE SUPPLY
92 GOLD ST. NEW YORK, N.Y.
DR. CH'K. APP'D. CG

NS-208

February 15, 1957
Issue #1

Issued by Engineering Dept.
Printed in U.S.A.

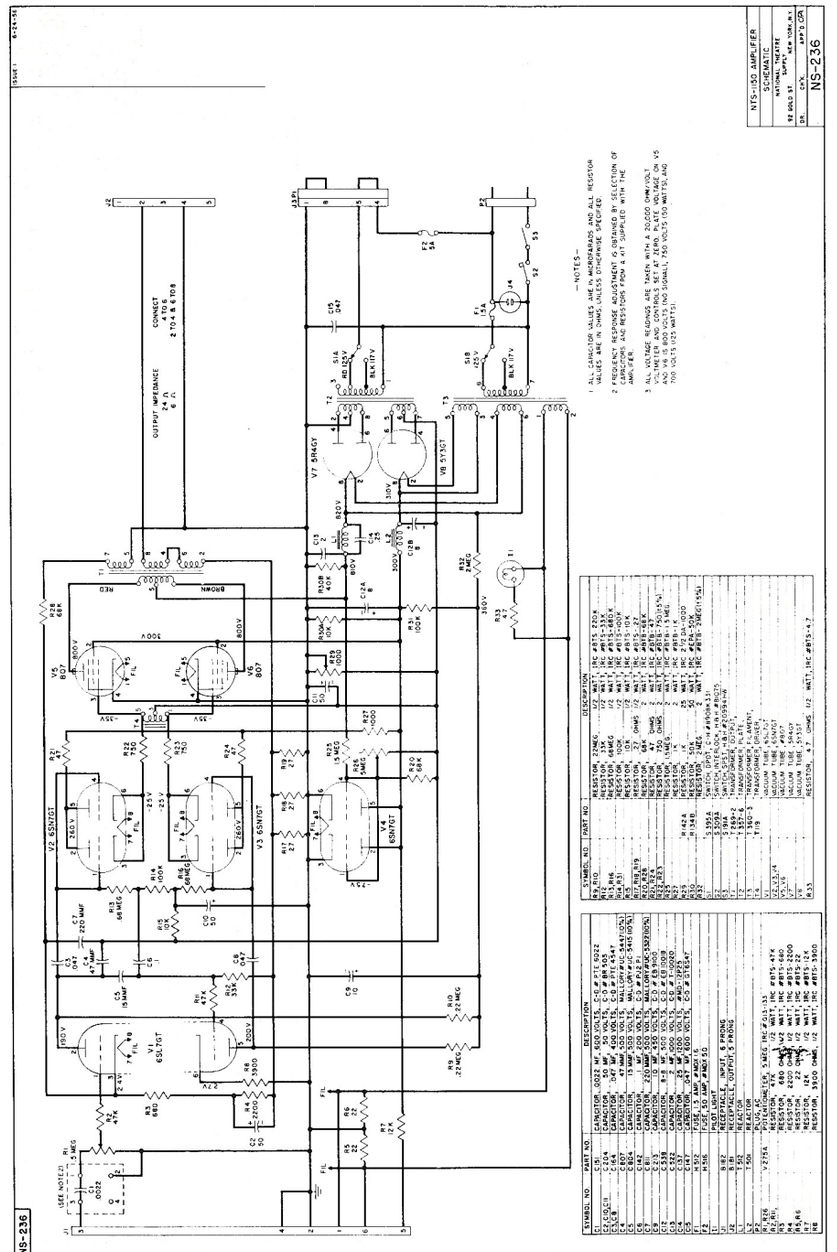

Issued by Engineering Dept.
Printed in U.S.A.
February 15, 1957
Issue #1

February 15, 1957
Issue #1

Issued by Engineering Dept.
Printed in U.S.A.

WC-1084

ISSUE
REDRAWN WITH EXTENSIVE CHANGES
ISSUE - 2 4-13-49

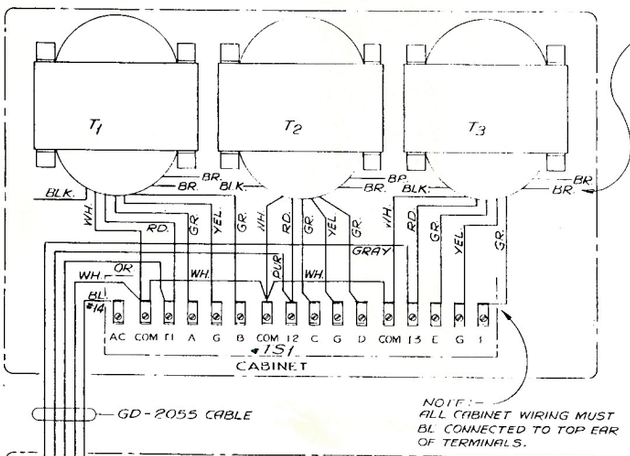

NOTE:-
LEAVE ALL BLK. (110V.) AND BR. (34V.) LEADS THE FULL LENGTH, TAPE AND INSULATE ENDS INDIVIDUALLY AND BEND OUT OF WAY.

NOTE:-
ALL CABINET WIRING MUST BE CONNECTED TO TOP EAR OF TERMINALS.

SCHEDULE

DESIGNATION	PART NO	APPARATUS
S1-S2-S3	PA-2563	SWITCH S.P.S.T.
FM1-FM2-FM3	PA-2564	RECEPTACLE-FUSE
F1-F2-F3	PA-2565	FUSE 10 AMP. 115V.
SKT1-SKT2-SKT3	PA-2557	SOCKET-IND. LAMP
LP1-LP2-LP3	PA-2558	LAMP-NEON 105/125V.
T1-T2-T3	PC-2525	TRANSFORMER
TS1	GC-2038	TERMINAL STRIP

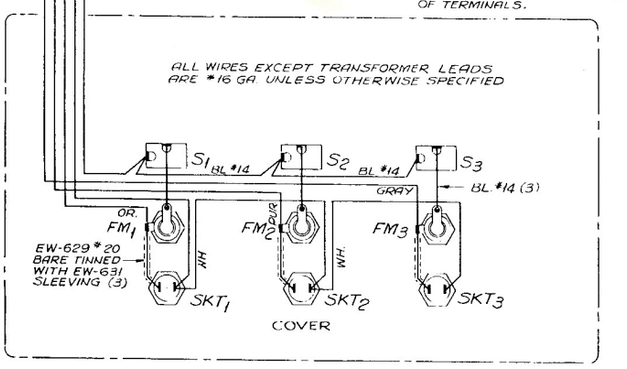

CABINET WIRING

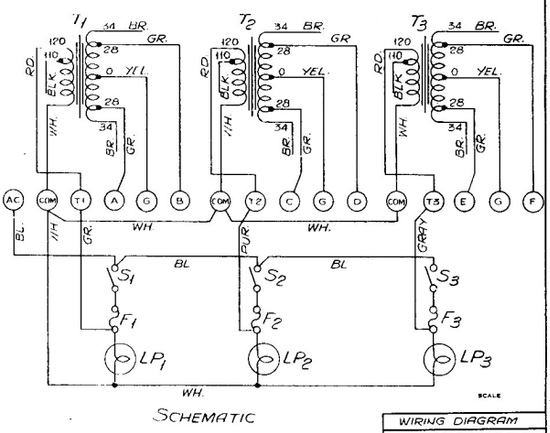

SCHEMATIC

WIRING DIAGRAM
PUE-1008 POWER SUPPLY
DRIVE-IN THEATRE LIGHTING
INTERNATIONAL PROJECTOR CORPORATION
85 LA FRANCE AVENUE
BLOOMFIELD NEW JERSEY
DR. RS CH'K APP'D

PRODUCT CLASS

WC-1084

EQUIPMENT LIST FOR SIMPLEX X-L SYSTEMS OPERATING ON 115 VOLT 60 CYCLE AC

SYSTEM	AMPL. POWER MIN. WATTS	CABINET KIT	POWER AMPLIFIER	NETWORK (NOTE 4)	POWER UNIT (NOTE 5)	H.F. HORN	STAGE SPEAKER EQPT. H.F. UNIT	L.F. HORN	L.F. UNIT
X-L2-11	20	AM-1032	AM-1027	LU-1103	PU-1009	2 x 4 2 x 5	1	1	1
X-L2-12	20	AM-1032	AM-1027	LU-1103	PU-1009	2 x 4 2 x 5	1	1	2
X-L4-12	40	AM-1033	AM-1027(2)	LU-1103	PU-1009	2 x 4 2 x 5	1	1	2
X-L4-22	40	AM-1033	AM-1027(2)	LU-1103	PU-1009	2 x 4 2 x 5 3 x 5	2	1	2
X-L6-12	60	AM-1032	AM-1026	LU-1103	PU-1009	2 x 4 2 x 5	1	1	2
X-L6-22	60	AM-1032	AM-1026	LU-1103	PU-1009	2 x 4 2 x 5 3 x 5	2	1	2
X-L6-24	60	AM-1032	AM-1026	LU-1103	PU-1009	2 x 5 3 x 5	2	2	4
X-L12-24	120	AM-1033	AM-1026(2)	LU-1103	PU-1009	2 x 5 3 x 5	2	2	4
X-L12-46	120	AM-1033	AM-1026(2)	LU-1103	PU-1009	3 x 5 3 x 6	4	3	6
DRIVE-IN						RAMP SWITCHING PANELS			
X-L7-D	70	AM-1037	AM-1026	-	PU-1005(2)	LU-3017			
X-L14-D	140	AM-1037 AM-1038	AM-1026(2)	-	PU-1005(2)	LU-3017			
X-L25-D	250	AM-1037	AM-1027 AM-1040	-	PU-1005(2)	LU-3017-3018			
X-L25X-D	250	AM-1037	AM-1027(2) AM-1040(2)	-	PU-1005(2)	LU-3017-3018			
X-L28-D	280	AM-1039	AM-1026(4)	-	PU-1005(2)	LU-3017-3018			

NOTES - 1. Three AM-1028 Pre-Amplifiers furnished; one for each Sound Mechanism, one for AM-1035 Non-Sync. Cabinet.
2. One AM-1035 Non-Sync. Cabinet with each system.
3. Two AM-197 Changeover Cabinets with each system.
4. AM-1029 Monitor Amplifier mounted in Network.
5. PU-1009 (60 cycles), PU-1010 (50 cycles). For two 9 volt, 4 amp. Lamps.

(See File 40.22 - Speaker Equipment)

Issued by
Engineering Department
Printed in U. S. A.

April 18, 1950
Issue #1

EQUIPMENT LIST FOR STANDARD SIMPLEX SYSTEMS
OPERATING ON 115 VOLT 60 CYCLE AC

EQUIPMENT	E	A & A-15	A-30	B-30 (Formerly B)	B-60	C-60 (Formerly C)	15 WATT SPECIAL	30 WATT SPECIAL
Power	10 Watts - 32 DB	15 Watts - 34 DB	30 Watts - 37 DB	30 Watts - 37 DB	60 Watts - 40 DB	60 Watts - 40 DB	15 Watts - 34 DB	30 Watts - 37 DB
Seat Limit	800	1,500	1,500 *	2,500	2,500 *	4,500	1,500	2,500
Volume Limit	100,000	200,000	200,000 *	500,000	500,000 *	1,200,000	200,000	500,000
Volume Control Amplifier(s)	1 AM-141 Ampl. Unit AM-1010	2 AM-101 Units each including 1 AM-1000 Amp.	2 AM-101 Units each including 2 AM-1000 Amps.	2 AM-101 Units each including 2 AM-1000 Amps. Note 2	2 AM-101 Units each including 2 AM-1000 Amps.	2 AM-101 Units each including 2 AM-1000 Amps. Note 2	2 AM-101 Units each including 1 AM-1000 Ampl.	2 AM-101 Units each including 1 AM-1000 Ampl.
Power Amplifier(s)	1 AM-142 Ampl. Eqpt. AM-1011	1 AM-1001	2 AM-1001	2 AM-1001	4 AM-1001	4 AM-1001	1 AM-1001	2 AM-1001
Monitor Amplifier	Incorporated as part of AM-1011	1 AM-1003	1 AM-1003	1 AM-1003	1 AM-1003	1 AM-1003	1 AM-1003	1 AM-1003
Monitor Unit and Horn	1 LU-1046 L. S. T. in AM-142	1 LU-1018 Unit 1 LU-1024 Horn	1 LU-1018 Unit 1 LU-1024 Horn	1 LU-1018 Unit 1 LU-1024 Horn	1 LU-1018 Unit 1 LU-1024 Horn	1 LU-1018 Unit 1 LU-1024 Horn	1 LU-1018 Unit 1 LU-1024 Horn	1 LU-1018 Unit 1 LU-1024 Horn
System Switching Panel	None	See Note 1	1 AM-2013	1 AM-2013	1 AM-2013	1 AM-2013	See Note 1	1 AM-2013
Network	1 LU-1047 12 ohm input	1 LU-1002 12 ohm input	1 LU-1002 12 ohm input	1 LU-1003 6 ohm input Note 3	1 LU-1003-X 6 ohm input	1 LU-1026 12 ohm input	1 LU-1026 12 ohm input	1 LU-1026 12 ohm input
Stage Speakers	1 LU-1060 HF PM 1 LU-1004 LF PM	1 LU-1060 HF PM 1 LU-1004 LF PM	1 LU-1060 HF PM 1 LU-1004 LF PM	2 LU-1060 HF PM 2 LU-1004 LF PM	2 LU-1060 HF PM 2 LU-1004 LF PM	2 LU-1011 HF 4 LU-1010 LF Note 5	2 LU-1011 HF 2 or 4 LU-1010 LF Notes 5 & 6	Same as 15 Watt Special
Stage Horns	1 LU-1049 HF 1x3 1 LU-1017 LF	1 LU-1001 HF 2x4 1 LU-1017 LF	1 LU-1001 HF 2x4 1 LU-1017 LF	1 LU-1029 HF 2x4 2 LU-1017 LF	1 LU-1029 HF 2x4 2 LU-1017 LF	1 LU-1012,1013,1014, or 1019 HF Note 4 2 LU-1015 LF	1 LU-1012,1013,1014, or 1019 HF Note 4 1 or 2 LU-1015 Note 6	Same as 15 Watt Special
Wings (Set)	None	1 LU-1041	1 LU-1041	1 LU-1042	1 LU-1042	1 LU-1040	1 LU-1039 or 1040	Same as 15 Watt Special
Power Unit(s)	1 PU-1005	1 PU-1000	1 PU-1000	1 PU-1000	1 PU-1000	1 PU-1000 1 PU-1003	1 PU-1000 1 PU-1003	1 PU-1000 1 PU-1003
Sound Mechanisms (Note 7)	2 SH-1000	2 SH-1000	2 SH-1000	2 SH-1000	2 SH-1000	2 SH-1000	2 SH-1000	2 SH-1000
Motors (Note 8)	2 SH-2053	2 SH-2053	2 SH-2053	2 SH-2053	2 SH-2053	2 SH-2053	2 SH-2053	2 SH-2053
Non-Synch. Attach.	Jack input in AM-142 Amp.	1 AM-2069	1 AM-2069	1 AM-2069	1 AM-2069	1 AM-2069	1 AM-2069	1 AM-2069

* Academy Ratings

NOTES:
1. AM-2049 Reg. Emergency Switch supplied where emergency amplifier installed.
2. Earlier B & C systems equipped with only 1 AM-1000 Volume Control Amplifier in each AM-101 Unit.
3. B-30 Systems equipped with LU-1003-X Network.
4. HF Horns supplied according to height and width of theatre. LU-1012 - 3x4; LU-1013 - 3x5; LU-1014 - 3x6; LU-1019 - 2x5.
5. These HF and LF speaker units are energized field type requiring 200 Volts DC from PU-1003 Power Unit.
6. System furnished with either 1 or 2 LF Horns and 2 or 4 LF speakers.
7. For push-pull operation the SH-106 Push-Pull Kit is installed in the SH-1000 Sound Mechanisms.
8. Where power is DC or 50 cycle AC - see installation drawings for code number of motors.

Printed in U. S. A.

Issue #1
October 8, 1941

ALTEC SERVICE CORPORATION
SIMPLEX
SOUND EQUIPMENT BULLETIN

THEATRE MAGNETIC SOUND SYSTEMS

DESCRIPTION	COMPONENT	SYSTEMS																									
		XL-32-28	XL-32-311	XL-36-322	XL-101	XL-202-D	XL-232-38	XL-232-39	XL-232-311	XL-232-312	XL-233-39	XL-233-311	XL-233-312	XL-236-312	XL-236-322	XL-236-324	XL-312-324	XL-400	XL-432-38	XL-432-39	XL-432-311	XL-432-312	XL-433-311	XL-436-322	XL-4312-324
Magnetic Reproducer	AM-210	1	1	1	-	-	-	-	-	-	*	-	-	-	-	-	1	-	-	-	-	-	-	-	-	-
Magnetic Soundhead (Mixer Type)	SH-1026	-	-	-	2	-	-	-	-	-	*	-	-	-	-	-	-	-	-	-	-	-	-	-	-	-
Magnetic Soundhead	SH-1025	-	-	-	1	2	2	2	2	2	2	2	2	2	2	-	-	2	-	2	2	2	2	2	2	2
3 Channel changeover & Warping Cab.	AM-202	1	1	1	-	2	2	-	2	-	-	-	-	2	-	2	1	-	2	1	1	1	1	1	1	1
3 Channel changeover Cabinet	AM-203	-	-	-	-	-	-	-	-	-	-	-	-	-	-	-	-	2	-	-	-	-	-	-	-	-
4 Channel changeover Cabinet	AM-211	-	-	-	2	2	2	2	2	2	2	2	2	2	2	2	-	-	2	1	1	1	1	1	1	1
Balance & Warping Cabinet	AM-212	-	-	-	-	-	1	1	1	-	1	1	-	1	1	-	-	-	1	-	-	-	-	-	-	-
System selector & control cab.	AM-213	-	-	-	1	1	-	-	-	-	-	-	-	-	-	-	-	-	-	-	-	-	-	-	-	-
Warping Unit	AM-1079	-	-	-	1	-	-	-	-	-	-	-	-	-	-	-	-	-	-	-	-	-	-	-	-	-
Pre-amplifier	AM-1065	-	-	-	2	3	4	4	4	4	4	4	4	4	4	4	-	8	8	8	8	8	8	8	8	8
Pre-amplifier cabinet	AM-1066	-	-	-	1	1	1	1	1	1	1	1	1	1	1	1	-	2	2	2	2	2	2	2	2	2
Pre-amplifier power supply	PU-1011	-	-	-	1	1	1	1	1	1	1	1	1	1	1	1	-	1	1	1	1	1	1	1	1	1
Power Supply cabinet	PU-1012	-	-	-	1	1	1	1	1	1	1	1	1	1	1	1	-	1	1	1	1	1	1	1	1	1
System cabinet	AM-1031	1	1	1	-	-	1	1	1	1	1	1	1	1	1	2	-	1	1	1	1	1	1	1	2	2
System cabinet kit	AM-1055	-	1	1	-	-	-	-	-	-	-	-	-	-	-	1	-	-	-	-	1	1	1	1	1	1
System cabinet kit	AM-1059	-	1	-	-	-	-	-	-	-	-	-	-	-	-	1	-	-	-	-	1	-	-	-	1	-
Power Amplifier	AM-1027	3	3	-	-	-	3	3	3	-	-	-	-	3	-	-	6	-	3	3	-	3	-	-	6	-
Power Amplifier	AM-1026	-	-	-	3	*	-	-	-	3	-	3	3	-	3	3	*	-	-	-	3	-	-	-	-	6
Power Amplifier	AM-1080	-	-	-	-	-	1	3	1	1	3	1	1	1	1	*	-	2	2	2	2	2	2	2	2	2
Control Unit	AM-1064	-	-	-	-	-	1	1	1	1	1	1	1	1	1	-	-	2	2	2	2	1	2	2	2	2
Loudspeaker Equipment	LU-141	3	-	-	-	-	*	-	-	-	-	-	-	-	-	-	-	-	-	-	-	-	-	-	-	-
Loudspeaker Equipment	LU-143	2	3	-	-	-	*	-	3	-	-	3	-	-	-	-	-	-	3	-	3	-	-	-	-	-
Loudspeaker Equipment	LU-144	-	-	-	-	-	*	-	-	3	-	-	3	3	-	-	-	-	-	-	-	3	-	-	-	-
Loudspeaker Equipment	LU-145	-	-	3	-	-	*	-	-	-	-	-	-	-	3	3	-	-	-	-	-	-	3	3	-	3
Loudspeaker Equipment	LU-146	-	-	-	-	-	*	-	-	-	-	-	-	-	-	-	-	-	-	-	-	-	-	-	-	-
Loudspeaker Equipment	LU-148	-	-	-	-	-	3	3	-	-	3	-	-	-	-	3	-	-	-	3	-	-	-	-	-	3
Loudspeaker Equipment	LU-160	-	-	-	-	-	-	-	3	3	-	3	3	-	3	-	-	-	-	-	-	-	-	-	-	-
Speaker Network	LU-1121	-	3	3	-	-	-	-	3	3	-	3	3	3	3	3	*	-	-	*	3	3	3	3	3	3
Auditorium Speaker	LU-150	*	*	-	-	-	*	-	-	-	*	-	-	-	*	*	-	-	*	*	-	-	-	-	-	-
Auditorium Speaker	LU-151	*	-	-	-	-	*	-	-	-	*	-	-	-	*	*	-	-	*	*	-	-	-	-	-	-
Remote Switch Box	AM-205	1	2	2	1	-	1	1	1	1	1	1	1	1	1	2	-	1	1	1	1	1	1	1	1	1
System Selector Box	AM-207	-	-	1	1	-	1	-	1	1	-	1	1	1	1	-	1	-	-	-	1	1	1	1	1	1
Mon. Ampl. & Control Panel Assm.	AM-1054	1	1	1	1	-	1	1	1	1	1	1	1	1	1	1	1	1	1	1	1	1	1	1	1	1
Monitor Speaker	LU-142	1	1	1	-	-	1	-	1	1	-	1	1	1	1	1	-	1	1	-	1	1	1	1	1	1
Speaker Switch Kit	LU-1122	1	1	1	-	-	1	1	1	1	1	1	1	1	1	1	-	1	1	1	1	1	1	1	1	1
Monitor Panel & System Cab. Kit	AM-1062	1	-	-	-	-	1	1	1	1	1	1	1	1	1	-	-	-	-	-	1	1	-	-	-	-
Power Supply Dummy Load	PU-1013	-	-	-	2	1	1	1	1	1	1	1	1	1	1	1	-	-	-	-	-	-	-	-	-	-
Spare Tube Kit	AM-1063	-	-	-	1	1	1	1	1	1	1	1	1	1	1	1	-	-	-	-	-	-	-	-	-	-
Spare Tube Kit	AM-1067	-	-	-	-	-	1	1	1	1	-	-	-	1	-	1	-	-	-	-	-	-	-	-	-	-
Spare Tube Kit	AM-1068	-	-	-	-	-	-	-	-	-	-	-	-	-	1	-	-	-	-	-	-	-	-	-	-	-
Spare Tube Kit	AM-1072	-	-	-	-	-	-	1	1	-	1	1	1	-	-	-	-	-	-	-	-	-	-	-	-	-

* Quantity depends on size and shape of theatre

Issued by
Engineering Department
Printed in U. S. A.

August 26, 1954
Issue #1

ALTEC SERVICE CORPORATION
SIMPLEX
SOUND EQUIPMENT BULLETIN
DRIVE-IN MAGNETIC SOUND SYSTEMS

ADDITIONAL PROJECTION ROOM SOUND EQUIPM. FOR TWO CHANNEL STEREO. SOUND	COMPONENT NUMBER	DESCRIPTION	EXISTING SYSTEM															
			SIMPLEX XL DRIVE-IN SOUND SYSTEM						SIMPLEX FOUR STAR DRIVE-IN SOUND SYSTEM						NTS DRIVE-IN SOUND SYSTEM			
			XL7-D	XL14-D	XL21-D	XL28-D	XL25-D	XL25X-D	F-70	F-140	F-210	F-280	F-250	F-250X	NTS-125	NTS-250	NTS-125RGX	NTS-250RGX
XL 202-D	SH-1025	Magnetic Sound Head	2	2	2	2	2	2	2	2	2	2	2	2	2	2	2	2
	AM-1065	Pre-amplifier	3	3	3	3	3	3	3	3	3	3	3	3	3	3	3	3
	AM-1066	Pre-amplifier Cabinet	1	1	1	1	1	1	1	1	1	1	1	1	1	1	1	1
	PU-1011	Pre-amplifier Power Supply	1	1	1	1	1	1	1	1	1	1	1	1	1	1	1	1
	PU-1012	Power Supply Cabinet	1	1	1	1	1	1	1	1	1	1	1	1	1	1	1	1
	PU-1013	Power Supply Dummy Load	1	1	1	1	1	1	1	1	1	1	1	1	1	1	1	1
	AM-211	Four Channel Changeover Cabinet	2	2	2	2	2	2	2	2	2	2	2	2	2	2	2	2
	AM-213	System Selector & Control Cabinet	1	1	1	1	1	1	1	1	1	1	1	1	1	1	1	1
	AM-1063	Spare Tube Kit	1	1	1	1	1	1	1	1	1	1	1	1	1	1	1	1
AMPLIFIERS	AM-1026	Power Amplifier	1	2	3	4	-	-	1	2	3	4	-	-	-	-	-	-
	AM-1027	Power Amplifier	-	-	-	-	1	-	-	-	-	-	1	-	-	-	-	-
	AM-1040	Power Amplifier	-	-	-	-	1	-	-	-	-	-	1	-	-	-	-	-
	NTS-1125	Power Amplifier	-	-	-	-	-	-	-	-	-	-	-	-	1	2	1	2
CABINETS AND KITS	AM-1031	System Cabinet (4 place)	-	-	1	1	-	-	-	-	1	1	-	-	-	-	-	-
	AM-1034	System Cabinet	1	2	-	-	1	-	1	2	-	-	1	-	-	-	-	-
	AM-1037	System Cabinet Kit	1	1	-	-	1	-	1	1	-	-	1	-	-	-	-	-
	AM-1038	" " "	-	1	-	-	-	-	-	1	-	-	-	-	-	-	-	-
	AM-1039	" " "	-	-	1	1	-	-	-	-	1	1	-	-	-	-	-	-
	NTS-69	Monitor Volume Control	-	-	-	-	-	-	-	-	-	-	-	-	1	-	1	-
	NTS-70	Mon.Vol.Cont. & Ampl.Selector Sw.	-	-	-	-	-	-	-	-	-	-	-	-	-	1	-	1
RAMP CONTROL AND MONITOR SPEAKERS	LU-3016	Control Panel Cabinet	-	-	1	1	1	1	1	1	1	1	1	1	-	-	-	1
	LU-3017	Mon. Selector & Ramp Cont. Panel	1	1	1	1	1	1	1	1	1	1	1	1	-	-	-	-
	LU-3018	Ampl. Selector & Ramp Cont. Panel	-	-	1	1	1	1	-	-	1	1	1	1	-	-	1	2
	LU-3019	Panel Blank	-	-	-	-	-	-	1	1	-	-	-	-	-	-	-	-
	LU-1/2	Monitor Speaker Assembly	1	1	1	1	1	1	1	1	1	1	1	1	-	-	-	-
	LU-1018	Monitor Unit	-	-	-	-	-	-	-	-	-	-	-	-	1	1	1	1
	LU-1024	Monitor Horn	-	-	-	-	-	-	-	-	-	-	-	-	1	1	1	1

1. STARTING THE SYSTEM

A. AC Power. On "E" Systems turn on the AM-142 Amplifier Equipment and PU-1005 Power Unit by setting the main AC power supply switch in "ON" position. On all other systems, turn on by setting AC switches on the AM-1001 Amplifier(s) and the Power Unit(s) in "ON" position.

NOTE:- If a master switch is provided in the main power supply to the System Cabinet, these "AC" switches may be left in the "ON"position, and the AC power supply controlled by the master switch.

If the main power supply is DC, the rotary converter should be started before the "AC" switches are thrown in "ON" position.

B. AM-1001 Amplifier. Test the Vacuum Tubes in each amplifier daily. Replace any defective tubes at once.

C. PU-1000 Power Unit. Set "Output" switch in "REC" position. Tungar bulbs should begin to glow immediately, the exciter lamp and pilot lamp in one AM-101 Volume Control Amplifier should be bright (4 amps. 9 volts DC). In the other AM-101 Amplifier the pilot lamp should be out, and the exciter lamp dim (2 volts AC).

D. SH-1000 Sound Mechanism.

(1) Lubrication. Lubricate per the "Sound Mechanism Lubrication Chart".

(2) Optical System. Clean exciter lamp, photo-electric cell, reflector lens and lens tube lenses carefully each day with lens tissue. Be sure that all dirt, oil and finger prints are removed.

Check the spot of light on the photo-electric cell daily. It should be 7/16" in diameter and centered on the cathode. Readjust if necessary.

E. Drive Motor. Run each motor for five minutes before starting the show to thoroughly distribute the oil in the gear box. In cold weather, turn the motor over by hand a few times before turning on the power.

F. AM-101 Volume Control Amplifier. Be sure the switch on one of the amplifier terminals strips in each cabinet is set in "ON" position. The switch on the other amplifier terminal strip in each cabinet should be set in "OFF" position. Check the changeover switch during the sound test by changing over at each position twice.

G. Network. Set "H.F." and "L.F." and "Monitor Ampl." switches in "ON" position.

H. AM-2013 Switch. (where installed)

A. Set in position "1-2" for normal operation. All AM-1001 amplifiers operate in parallel.

B. In systems having two AM-1001 Amplifiers, Amplifier #1 (lower) only is operative when the switch is in position "1" Amplifier #2 being disconnected. Amplifier #2 (upper) only is operative when the switch is in position "2", Amplifier #1 being disconnected.

C. In systems having four AM-1001 Amplifiers, amplifiers #1 and #3 (upper cabinet) only are operative when the switch is in position "1", amplifiers #2 and #4 being disconnected. Amplifiers #2 and #4 (lower cabinet) only are operative when the switch is in position #2, amplifiers #1 and #3 being disconnected.

D. Set the switch in all three positions each day and test for sound quality.

I. Sound Test. For a preliminary sound test, move a card rapidly in and out of the light beam (exciter lamp bright) between the reflector lens and the photoelectric cell in each mechanism. A "thump" should be heard from the stage and monitor speakers. If possible, a short reel should be run in each machine to test for sound quality, and at the same time test the stage loudspeakers.

J. Stage Speaker Testing. Stage speakers should be tested each day by means of the switches on the network panel. The procedure is described in Equipment Instruction packed with the network.

2. RUNNING THE SHOW.

A. Threading the Mechanism. The film should be threaded in an "OFF" sound mechanism (exciter lamp dim) in accordance with Equipment Bulletin "SH-1000 Sound Mechanism". This applies especially to the first reel of the show, to prevent threading noises reaching the audience.

Be sure that the lateral guide roller is closed after film is threaded. If the mechanism door does not close, the lateral guide roller is open. Pull the lateral guide roller assembly outward, after threading is completed, until it is in firm contact with the knurled adjusting nut. In some instances the assembly may be pushed inward as it is closed, and may not return to its proper position due to friction. Sprocket hole noise will occur, and cannot be remedied by adjustment.

B. Starting the Projector. Turn the power switch on the motor to "ON", and when the motor is up to speed make the sound changeover.

C. Changeover. In the "E" System the changeover is made by operating the SN-1087 Changeover Switch at either machine. In all other systems, to make sound changeover, operate the changeover switch in either Volume Control Amplifier. The three-way circuit used permits changeover at either machine.

3. STOPPING THE SYSTEM.

A. In "E" Systems set the main "AC" power supply switch in the "OFF" position. In other systems set "AC" switches on the AM-1001 Amplifiers and the Power Unit(s) (or the master power switch) in "OFF" position.

B. In the SH-1000 Sound Mechanism leave the lateral guide roller open. If it is left closed flat spots will develop on the felt roller, cause flutter and make replacement necessary.

1. SOUND MECHANISM SCANNING SYSTEM

The exciter lamp, lens tube, reflector lens and lateral guide roller are adjusted for optimum response at the factory and should be received ready for operation. If however, there is definite evidence that the scanning system is out of adjustment, readjustments should be carefully made in accordance with the procedure in Equipment Bulletin, "SH-1000 Sound Mechanism".

A. To facilitate adjustments of the lens tube, using an 8,000 cycle test film,as described in Equipment Bulletin "SH-1000 Sound Mechanism", the temporary wiring changes (referred to factory adjustment) in the warping circuit of the AM-1001 Amplifier, as shown in Figure 1 are recommended. Similar changes should be made in the warping circuit of the AM-142 Amplifier Equipment and in the high frequency equalization in the AM-141 Volume Control Amplifier as shown in Figures 2 & 3. These changes raise the characteristic at the high end in contrast to the normal droop, and thereby increase the accuracy of the adjustment. The warping circuit should be restored to normal after the adjustments have been completed.

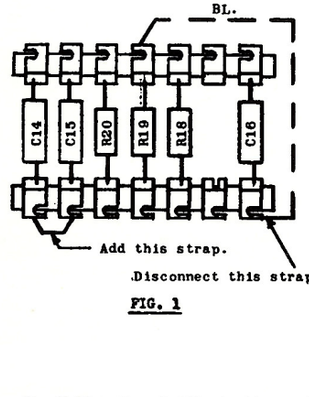

FIG. 1

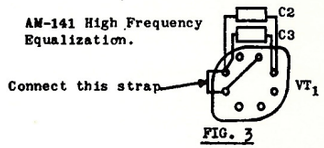

FIG. 3

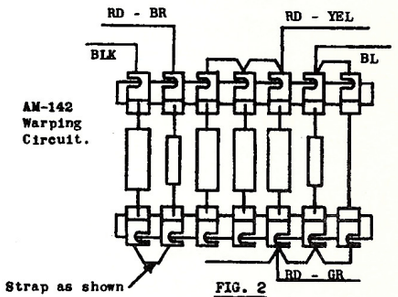

FIG. 2

B. Uniformity of illumination and correct positioning of the lateral guide roller should be checked with the A17P-1 Test Film and buzz track film.

2. ADJUSTMENT OF GAIN

In the AM-1001 Amplifier an adjustable gain control is provided so that adequate volume level may be obtained in an auditorium with a normal setting of step 9 of the main volume control in the AM-101 Volume Control Amplifier. To set this gain control, turn the main volume control in the AM-101 to step 9, run an average standard print (Academy Test Reel may be used), and adjust the gain control in the amplifier so that adequate volume is obtained in the auditorium. Once adjusted there should be no necessity for readjustment, as the main volume control in the AM-101 should be adjusted to take care of variations in prints, size of audience, etc. In the AM-141 Volume Control Amplifier adjust the main volume control as required to obtain adequate volume in the auditorium.

3. PHASING OF STAGE LOUDSPEAKERS

A. Connections - The following are the stage speaker combinations.

1 - One H.F and one L.F. Speaker are connected across the high and low frequency leg of the network respectively.

2 - Two H.F and two L.F. Speakers are connected in parallel across the high and low frequency leg of the network respectively.

3 - Two H.F. speakers are connected in parallel across the high frequency leg of the network and four L.F. Speakers are connected in series parallel across the low frequency leg of the network.

B. Testing - Where P.M. Speakers are installed the high and low frequency speakers should be out-of-phase electrically with respect to each other. Each should be tested by connecting

a DC voltmeter to terminals "L_1" and "L_2", the same lead to the same terminal of each unit. On the LF unit depress the diaphragm by hand from the front of the unit. The deflection should be in the same direction for each unit. On the HF unit depress the diaphragm by a sharp blow on the orifice with the palm of the hand. The deflection of the meter should be in the opposite direction.

Where energized field speakers are employed the high and low frequency speakers should be in phase electrically with respect to each other. Each should be tested by connecting a DC voltmeter across the speech terminals, the same lead to the same terminal of each unit, and a battery across the field terminals, the negative and positive battery terminals being connected to the negative and positive terminals of each speaker field coil respectively. The voltmeter should show a deflection in the same direction on each speaker when the battery supply is opened. Do not break the loud speaker field supply circuit to test polarity as the speakers may be damaged.

C. Positioning of Horns - The horns should be positioned initially in accordance with the Eq. Instruction packed with the set of wings or with LU-1049 Horn & Cradle. After the horns have been finally set for distribution (See Section 5), a standard test reel should be run and the high frequency horn and cradle moved back and forth until best quality is obtained. Then fasten the cradle securely in position.

D. High and Low Frequency Loud Speaker Units.

(1) The LU-1060 High Frequency Loud Speaker Unit is a permanent magnet, metal diaphragm, moving coil speaker, 7" in diameter and weighing 21 lbs. The voice coil impedance is 18 ohms. In all but the "E" system, one unit mounts on the LU-1001 (2 x 4) High Frequency Horn, or two units on the LU-1029 (2 x 4) High Frequency Horn. The high frequency horns are multicellular, exponential horns made of terneplate. In the "E" system one unit mounts on the LU-1049 (1 x 3) High Frequency Horn. This horn is a multicellular exponential horn made of special lead coated metal.

(2) The LU-1011 High Frequency Loud Speaker Unit is an energized, metal diaphragm, moving coil speaker, 6-1/2" in diameter and weighing 26 lbs. The voice coil impedance is 22 ohms. The field coil resistance is 2500 ohms and field excitation of 220 volts DC, is obtained from the PU-1003 Power Unit. Two units mount on the LU-1012 (3 x 4), LU-1013 (3 x 5), LU-1014 (3 x 6) or LU-1019 (2 x 5) High Frequency Horn. The high frequency horns are multicellular, exponential horns made of lead coated metal.

(3) The LU-1004 Low Frequency Loud Speaker Unit is a permanent magnet, moving coil, cone type speaker, 15" in diameter and weighing 20 lbs. The voice coil impedance is 12 ohms. One unit mounts in each LU-1017 Low Frequency Horn. The LU-1017 is a wooden, folded, exponential horn.

(4) The LU-1010 Low Frequency Loud Speaker Unit is an energized, moving coil, cone type speaker, 15" in diameter and weighing 27 lbs. The voice coil impedance is 6 ohms. The field coil resistance is 1600 ohms and field excitation of 220 volts DC is obtained from the PU-1003 Power Unit. Two of these units mount in each LU-1015 Low Frequency Horn. The LU-1015 is a wooden, folded, exponential horn.

4. FREQUENCY RESPONSE ADJUSTMENTS

A. For AM-1001 Amplifiers.

The Warping Circuit in each AM-1001 Amplifier is set for the L_2 H_2 ourve (See drawing SC-21). If, after carefully positioning the horns in accordance with Sections 3 and 5, careful listening tests indicate the necessity for a change in the frequency response characteristic, the warping circuit may be adjusted per drawing SC-21.

B. For AM-141 and 142 Amplifiers

The High and Low End Warping Circuit in the AM-142 Amplifier Equipment is set for the L_{11}, H_{14} curve (See drawing SC-43), while the high frequency equalization in the AM-141 Volume Control Amplifier is "out" as shipped. If, after carefully positioning the horns in accordance with Sections 3 and 5, careful listening tests in the auditorium using the test film (not the monitor speaker in the Projection Room) indicate the necessity for a change in the frequency response characteristic, the warping circuit and high frequency equalization may be adjusted per the associated drawing SC-43.

C. In Concealed Conduit Installations #8401 Belden Microphone Cable should be substituted for the SN-1101 Coaxial Cable furnished for exposed conduit installations. Due to a difference in the capacity of the two cables, a compensating capacitor should be added in each AM-1011 Amplifier in the AM-142 Amplifier Equipment, when #8401 Belden is used, to obtain the frequency response characteristics shown on drawing SC-43. Refer to Equipment Instruction "Cable, #8401 Belden Microphone" for the size and method of connecting the additional capacitor.

5. ACOUSTICS OF AUDITORIUMS

The shape of the auditorium, the material used on the walls and ceiling, the decorative drapes on the walls and the type of seats and carpeting used determine the acoustic properties of the auditorium and the final positioning of the stage horns. When reverberation and reflections are encountered, special considerations apply.

A. Reverberation - Where reverberation exists due to wall and ceiling contour and non-absorbent qualities of surfaces, the stage horns should be set so that direct sound is projected into the seating area and does not strike any reflective surfaces.

B. Reflection - In auditoriums, having large reflective surfaces, such as flat or curved walls, ceiling domes, etc., reflected sound may be concentrated in certain areas within the seating section of the auditorium. Such a condition, depending upon the source of the reflected sound, is known as side wall, back wall or ceiling "slap", and results in distorted sound in those areas.

(1) Side Wall "Slap". To eliminate side wall "Slap", the two upper, outside cells of the high frequency horn may be plugged with wool yarn. Do not pack tight. The yarn should be in a loosely formed cone.

(2) Ceiling "Slap". Tilting the high frequency horn downward so that the direct sound is projected into the seating area and does not strike the ceiling will generally eliminate ceiling "Slap".

(3) Back Wall "Slap". This condition is probably the most difficult to clear, especially in houses with high balconies or large unbroken back wall areas as the direct sound may be reflected from the back wall to the seating area, or to the ceiling and then into the seating area. Under these conditions the following adjustments are suggested

(a) If possible, the high frequency horn should be tilted downward so that direct sound is just heard in the last row of seats, in which case the audience and seats will usually absorb the sound and avoid reflections.

(b) If the condition still exists, the entire loud speaker system should be moved off center on the stage and adjusted to give proper distribution. This change alters the reflection pattern, and back wall "slap" may not be noticeable.

(c) Another method of altering the reflection pattern is to angle the loud speaker system with respect to the screen. The amount of rotation necessary for effective results depends upon the size and shape of the auditorium and the nature of the surfaces. Care should be exercised in this procedure so as not to introduce "screen slap", which may be caused by too much angling of the horns.

Simplex **** SOUND System

TYPE "A-15" SYSTEM EMERGENCY FEATURES AND HOW TO USE THEM

INOPERATIVE APPARATUS		EMERGENCY PROCEDURE
1. ONE EXCITER LAMP. (LAMP BURNED OUT.)		REPLACE EXCITER LAMP. (PREFOCUSED BASE LAMP MAY BE USED TEMPORARILY WITHOUT ADJUSTMENT. CHECK ADJUSTMENT AS SOON AS POSSIBLE.)
2. PU-1000 POWER UNIT. (TUNGAR BULBS NOT LIGHTED, "ON" MECHANISM EXCITER LAMP AND PILOT LAMP NOT LIGHTED.)		SET "OUTPUT" SWITCH ON PU-1000 IN "AC" POSITION. (EXCITER LAMP SUPPLY AC.)
3. HIGH FREQUENCY STAGE SPEAKER. (NO HIGH FREQUENCIES REPRODUCED.)	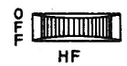	SET "HF" SWITCH ON LU-1002 NETWORK IN "OFF" POSITION. (ALL FREQUENCIES REPRODUCED BY LOW FREQUENCY STAGE SPEAKER.)
4. LOW FREQUENCY STAGE SPEAKER. (NO LOW FREQUENCIES REPRODUCED.)	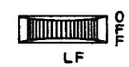	SET "LF" SWITCH ON LU-1002 NETWORK IN "OFF" POSITION. (PREVENTS OVERLOADING H.F.SPEAKER AND MAINTAINS CONSTANT IMPEDANCE.)
5. AM-1003 AMPLIFIER (MONITOR NOT OPERATING.)		SET "MON.AMPL." SWITCH ON LU-1002 NETWORK CHASSIS IN "OFF" POSITION. (LU-1018 MONITOR UNIT OPERATES ACROSS NETWORK INPUT.)
6. AM-1000 AMPLIFIER - SYSTEMS HAVING TWO AM-1000 AMPLIFIERS IN EACH AM-101 VOLUME CONTROL AMPLIFIER.	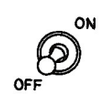	SET INOPERATIVE AMPLIFIER SWITCH IN "OFF" POSITION, AND STANDBY AMPLIFIER IN "ON" POSITION.
7. AM-1001 AMPLIFIER - SYSTEMS HAVING EMERGENCY AM-1001. (NO SOUND OR QUALITY POOR - NO PLATE METER READINGS.)		SET AM-2049 SWITCH IN "EMER" POSITION. (EMERGENCY AMPLIFIER CONNECTED, REGULAR AMPLIFIER DISCONNECTED.)

IF THE SYSTEM BECOMES INOPERATIVE, FOLLOW THE ABOVE EMERGENCY PROCEDURE TO RESTORE SOUND TEMPORARILY

Printed in U.S.A.
Issue #1
October 3, 1941

Simplex **** SOUND System

TYPE "A-30" SYSTEM EMERGENCY FEATURES AND HOW TO USE THEM

INOPERATIVE APPARATUS	EMERGENCY PROCEDURE
1. ONE EXCITER LAMP. (LAMP BURNED OUT.)	REPLACE EXCITER LAMP. (PREFOCUSED BASE LAMP MAY BE USED TEMPORARILY WITHOUT ADJUSTMENT. CHECK ADJUSTMENT AS SOON AS POSSIBLE.)
2. PU-1000 POWER UNIT. (TUNGAR BULBS NOT LIGHTED, "ON" MECHANISM EXCITER LAMP AND PILOT LAMP NOT LIGHTED.)	SET "OUTPUT" SWITCH ON PU-1000 IN "AC" POSITION. (EXCITER LAMP SUPPLY AC.)
3. AM-1001 AMPLIFIER #1. (NO SOUND OR QUALITY POOR - NO PLATE METER READINGS.)	SET AM-2013 SWITCH IN POSITION "2". (AMPLIFIER #2 CONNECTED, #1 DISCONNECTED.)
4. AM-1001 AMPLIFIER #2. (NO SOUND OR QUALITY POOR - NO PLATE METER READINGS.)	SET AM-2013 SWITCH IN POSITION "1". (AMPLIFIER #1 CONNECTED, #2 DISCONNECTED.)
5. HIGH FREQUENCY STAGE SPEAKER(S). (NO HIGH FREQUENCIES REPRODUCED.)	SET "HF" SWITCH ON NETWORK IN "OFF" POSITION. (ALL FREQUENCIES REPRODUCED BY LOW FREQUENCY STAGE SPEAKERS.)
6. LOW FREQUENCY STAGE SPEAKER(S). (NO LOW FREQUENCIES REPRODUCED.)	SET "LF" SWITCH ON NETWORK IN "OFF" POSITION. (PREVENTS OVERLOADING H.F. SPEAKERS AND MAINTAINS CONSTANT IMPEDANCE.)
7. AM-1003 AMPLIFIER (MONITOR NOT OPERATING.)	SET "MON. AMPL." SWITCH ON NETWORK CHASSIS IN "OFF" POSITION. (LU-1018 MONITOR UNIT OPERATES ACROSS NETWORK INPUT.)
8. AM-1000 AMPLIFIER-EITHER OF THE TWO IN EACH AM-101 VOLUME CONTROL AMPLIFIER. (NO SOUND.)	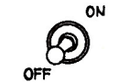 SET INOPERATIVE AMPLIFIER SWITCH IN "OFF" POSITION, AND STANDBY AMPLIFIER IN "ON" POSITION.

IF THE SYSTEM BECOMES INOPERATIVE, FOLLOW THE ABOVE EMERGENCY PROCEDURE TO RESTORE SOUND TEMPORARILY.

Printed in U.S.A. Issue #1
October 3, 1941

Simplex **** SOUND System

TYPE "B-30" SYSTEM EMERGENCY FEATURES AND HOW TO USE THEM

INOPERATIVE APPARATUS	EMERGENCY PROCEDURE
1. ONE EXCITER LAMP. (LAMP BURNED OUT.)	REPLACE EXCITER LAMP. (PREFOCUSED BASE LAMP MAY BE USED TEMPORARILY WITHOUT ADJUSTMENT. CHECK ADJUSTMENT AS SOON AS POSSIBLE)
2. PU-1000 POWER UNIT. (TUNGAR BULBS NOT LIGHTED, "ON" MECHANISM EXCITER LAMP AND PILOT LAMP NOT LIGHTED.)	SET "OUTPUT" SWITCH ON PU-1000 IN "AC" POSITION. (EXCITER LAMP SUPPLY AC.)
3. AM-1001 AMPLIFIER #1. (NO SOUND OR QUALITY POOR - NO PLATE METER READINGS.)	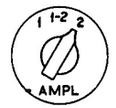 SET AM-2013 SWITCH IN POSITION "2". (AMPLIFIER #2 CONNECTED, #1 DISCONNECTED.)
4. AM-1001 AMPLIFIER #2. (NO SOUND OR QUALITY POOR - NO PLATE METER READINGS.)	SET AM-2013 SWITCH IN POSITION "1". (AMPLIFIER #1 CONNECTED, #2 DISCONNECTED.)
5. HIGH FREQUENCY STAGE SPEAKER(S). (NO HIGH FREQUENCIES REPRODUCED.)	SET "HF" SWITCH ON NETWORK IN "OFF" POSITION. (ALL FREQUENCIES REPRODUCED BY LOW FREQUENCY STAGE SPEAKERS.)
6. LOW FREQUENCY STAGE SPEAKER(S). (NO LOW FREQUENCIES REPRODUCED.)	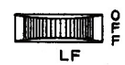 SET "LF" SWITCH ON NETWORK IN "OFF" POSITION. (PREVENTS OVERLOADING H.F. SPEAKERS AND MAINTAINS CONSTANT IMPEDANCE.)
7. AM 1003 AMPLIFIER (MON TOR NOT OPERATING.)	SET "MON. AMPL." SWITCH ON NETWORK CHASSIS IN "OFF" POSITION. (LU-1018 MONITOR UNIT OPERATES ACROSS NETWORK INPUT.)
8. AM 1000 AMPLIFIER-EITHER OF THE TWO IN EACH AM-101 VOLUME CONTROL AMPLIFIER. (NO SOUND.)	SET INOPERATIVE AMPLIFIER SWITCH IN "OFF" POSITION, AND STANDBY AMPLIFIER IN "ON" POSITION.

IF THE SYSTEM BECOMES INOPERATIVE, FOLLOW THE ABOVE EMERGENCY PROCEDURE TO RESTORE SOUND TEMPORARILY.

Printed in U.S.A.
Issue #1
October 3, 1941

Simplex ★★★★ SOUND System

TYPE "B-60" SYSTEM EMERGENCY FEATURES AND HOW TO USE THEM

INOPERATIVE APPARATUS	EMERGENCY PROCEDURE
1. ONE EXCITER LAMP. (LAMP BURNED OUT.)	REPLACE EXCITER LAMP. (PREFOCUSED BASE LAMP MAY BE USED TEMPORARILY WITHOUT ADJUSTMENT. CHECK ADJUSTMENT AS SOON AS POSSIBLE.)
2. PU-1000 POWER UNIT. (TUNGAR BULBS NOT LIGHTED, "ON" MECHANISM EXCITER LAMP AND PILOT LAMP NOT LIGHTED.)	SET "OUTPUT" SWITCH ON PU-1000 IN "AC" POSITION. (EXCITER LAMP SUPPLY AC.)
3. AM-1001 AMPLIFIER #1 OR #3. (NO SOUND OR QUALITY POOR- NO PLATE METER READINGS.)	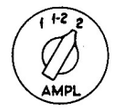 SET AM-2013 SWITCH IN POSITION "2". (AMPLIFIERS #2 AND #4 CONNECTED, #1 AND #3 DISCONNECTED.)
4. AM-1001 AMPLIFIER #2 OR #4. (NO SOUND OR QUALITY POOR - NO PLATE METER READINGS.)	SET AM-2013 SWITCH IN POSITION "1". (AMPLIFIERS #1 AND #3 CONNECTED, #2 AND #4 DISCONNECTED.)
5. HIGH FREQUENCY STAGE SPEAKER(S). (NO HIGH FREQUENCIES REPRODUCED.)	SET "HF" SWITCH ON NETWORK IN "OFF" POSITION. (ALL FREQUENCIES REPRODUCED BY LOW FREQUENCY STAGE SPEAKERS.)
6. LOW FREQUENCY STAGE SPEAKER(S). (NO LOW FREQUENCIES REPRODUCED.)	SET "LF" SWITCH ON NETWORK IN "OFF" POSITION. (PREVENTS OVERLOADING H.F. SPEAKERS AND MAINTAINS CONSTANT IMPEDANCE.)
7. AM-1003 AMPLIFIER. (MONITOR NOT OPERATING.)	SET "MON. AMPL." SWITCH ON NETWORK CHASSIS IN "OFF" POSITION. (LU-1018 MONITOR UNIT OPERATES ACROSS NETWORK INPUT.)
8. AM-1000 AMPLIFIER-EITHER OF THE TWO IN EACH AM-101 VOLUME CONTROL AMPLIFIER. (NO SOUND.)	**SET INOPERATIVE AMPLIFIER SWITCH IN "OFF" POSITION, AND STANDBY AMPLIFIER IN "ON" POSITION.**

IF THE SYSTEM BECOMES INOPERATIVE, FOLLOW THE ABOVE EMERGENCY PROCEDURE TO RESTORE SOUND TEMPORARILY.

Printed in U.S.A.
Issue #1
October 3, 1941

Simplex ★★★★ SOUND System

TYPE "C-60" SYSTEM EMERGENCY FEATURES AND HOW TO USE THEM

INOPERATIVE APPARATUS	EMERGENCY PROCEDURE
1. ONE EXCITER LAMP. (LAMP BURNED OUT.)	REPLACE EXCITER LAMP. (PREFOCUSED BASE LAMP MAY BE USED TEMPORARILY WITHOUT ADJUSTMENT. CHECK ADJUSTMENT AS SOON AS POSSIBLE.)
2. PU-1000 POWER UNIT. (TUNGAR BULBS NOT LIGHTED, "ON" MECHANISM EXCITER LAMP AND PILOT LAMP NOT LIGHTED.)	SET "OUTPUT" SWITCH ON PU-1000 IN "AC" POSITION. (EXCITER LAMP SUPPLY AC.)
3. AM-1001 AMPLIFIER #1 OR #3. (NO SOUND OR QUALITY POOR- NO PLATE METER READINGS.)	SET AM-2013 SWITCH IN POSITION "2". (AMPLIFIERS #2 AND #4 CONNECTED, #1 AND #3 DISCONNECTED.)
4. AM-1001 AMPLIFIER #2 OR #4. (NO SOUND OR QUALITY POOR - NO PLATE METER READINGS.)	SET AM-2013 SWITCH IN POSITION "1". (AMPLIFIERS #1 AND #3 CONNECTED, #2 AND #4 DISCONNECTED.)
5. HIGH FREQUENCY STAGE SPEAKER(S). (NO HIGH FREQUENCIES REPRODUCED.)	SET "HF" SWITCH ON NETWORK IN "OFF" POSITION. (ALL FREQUENCIES REPRODUCED BY LOW FREQUENCY STAGE SPEAKERS.)
6. LOW FREQUENCY STAGE SPEAKER(S). (NO LOW FREQUENCIES REPRODUCED.)	SET "LF" SWITCH ON NETWORK IN "OFF" POSITION. (PREVENTS OVERLOADING H.F. SPEAKERS AND MAINTAINS CONSTANT IMPEDANCE.)
7. AM-1003 AMPLIFIER. (MONITOR NOT OPERATING.)	SET "MON. AMPL." SWITCH ON NETWORK CHASSIS IN "OFF" POSITION. (LU-1018 MONITOR UNIT OPERATES ACROSS NETWORK INPUT.)
8. AM-1000 AMPLIFIER-EITHER OF THE TWO IN EACH AM-101 VOLUME CONTROL AMPLIFIER. (NO SOUND.)	SET INOPERATIVE AMPLIFIER SWITCH IN "OFF" POSITION, AND STANDBY AMPLIFIER IN "ON" POSITION.

IF THE SYSTEM BECOMES INOPERATIVE, FOLLOW THE ABOVE EMERGENCY PROCEDURE TO RESTORE SOUND TEMPORARILY.

Printed in U.S.A. Issue #1 October 3, 1941

ALTEC SERVICE CORPORATION

SIMPLEX

SOUND EQUIPMENT BULLETIN — DRIVE-IN THEATRE SYSTEMS

System	F-250	F-250-X
Power	250 watts	250 watts
Volume Control Amplifier(s)	2 AM-101 (1 AM-1000 each)	2 AM-101-X (2 AM-1000 each)
Driver Amplifier(s)	1 AM-1020	2 AM-1020 (1 Emergency)
Power Amplifier	1 AM-1018 (Altec A-287-WS)	1 AM-1018 (Altec A-287-WS)
Monitor Speaker & Horn	1 LU-1018 - 1 LU-1024	1 LU-1018 - 1 LU-1024
In-A-Car Speaker & Shelter	SK-538 (as required)	SK-538 (as required)
Speaker Control Cabinet	1 LU-3001	1 LU-3001
Power Unit	1 PU-1005	1 PU-1005
Sound Mechanisms	2 SH-1000	2 SH-1000
N.S. Ann. Switching Attachment	1 AM-2069	1 AM-2069
System Switching Panel		1 AM-2013

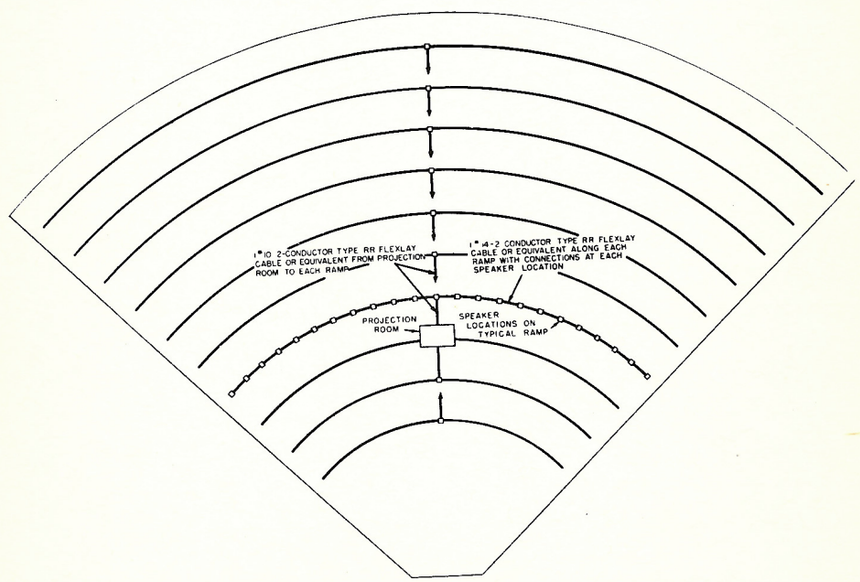

TYPICAL DRIVE-IN THEATRE
WITH POST TYPE SPEAKERS
RAMP WIRING

SK-536

Issued by
Engineering Department
Printed in U. S. A.

Issue #1
December 15, 1946

1. GENERAL

1.1 The XL-101 Single Track Magnetic Sound System consists of the following components:

1 - PU-1012 Power Supply Cabinet
1 - PU-1011 Pre-Amplifier Power Supply
2 - PU-1013 Dummy Loads
2 - SH-1026 Magnetic Soundheads
1 - AM-1066 Pre-Amplifier Cabinet
2 - AM-1065 Pre-Amplifier
1 - AM-1079 Warping Unit
2 - AM-211 Changeover Cabinets
1 - AM-207 System Selector Box

2. INSTALLATION

2.1 Mount and wire equipment in accordance with Fig. 1, Drawing I-2257, Conduit Layout, and Fig. 2, Drawing W-1187, Wiring Diagram.

2.11 SH-1026 Sound Heads - Follow instruction covering SH-1025 Sound Heads, E. B., Series XL-200 Systems, file 40.385, paragraph J, pages 11 and 12.

2.12 AM-211 Changeover Cabinet - Refer to E. B., Series XL-200 Systems, file 40.385, paragraph F, page 8.

2.13 AM-207 System Selector Box - Refer to E. B., Series XL-200 Systems, file 40.385, paragraph H, pages 8-10.

2.14 AM-1066 Pre-Amplifier Cabinet

1. Whenever possible, mount the cabinet on the front wall of the Projection Room between projectors not less than three feet from the projector motors and picture changeovers, and so that it will be convenient for servicing.

2. In some instances, it may be necessary to improvise suitable mounting brackets to clear obstructions.

3. Make connections to the terminal strip per the system wiring diagram.

4. Plug an AM-1065 Pre-Amplifier into each of the two multi-conductor receptacles at left and an AM-1079 Warping Unit into receptacle at the right. (See Figure 1).

2.15 PU-1012 Pre-Amplifier Power Supply Cabinet

1. Mount the cabinet in the selected location and make connections to the terminal strip in accordance with the system wiring diagram.

2. Mount the PU-1011 Power Supply on the back of the cabinet using the mounting screws provided and connect the cable form terminals to the terminal strip in accordance with the system wiring diagram.

3. Plug a PU-1013 Dummy Load into each of the two receptacles on the rear of the cabinet.

4. Strap resistors in each Dummy Load as follows: A-B and B-C.

3. ADJUSTMENTS AND REPLACEMENTS

3.1 SH-1026 MAGNETIC SOUNDHEAD

3.11 Pad Roller Assembly Replacement

a. Open the Pad Roller and compress the actuating spring to relieve the spring tension.

NOTE: Before removing the Lower Pad Roller Assembly, remove the Lower Tension Roller Fastening Screw and the Lower Tension Roller.

b. Remove the Pad Roller Assembly Fastening Screw and the Pad Roller Assembly.

c. Replace parts as necessary, reassemble, and adjust the Pad Roller clearance per the following paragraph.

Issued by
Engineering Department
Printed in U. S. A.

September 3, 1954
Issue #1

3.12 Pad Roller Replacement

a. Open the Pad Roller.

b. Loosen the Pad Roller Stud Set Screw in the Pad Roller Arm Bracket.

c. Remove the Pad Roller Stud and Pad Roller.

d. Replace Parts as necessary and reassemble.

NOTE: Position the Pad Roller Stud so that the Pad Roller rotates freely before tightening the set screw.

e. Adjust the clearance between the Pad Roller and Sprocket as follows:

CAUTION: The Upper and Lower Pad Rollers must be adjusted as described to minimize the possibility of film damage. Under normal operating conditions these pad rollers will not rotate. They should not be adjusted in an attempt to make them rotate.

(1) Thread two thicknesses of film on the sprocket and close the Pad Roller.

(2) Loosen the Pad Roller Arm Adjusting Screw Locknut and position the Pad Roller Arm Adjusting Screw so that the Pad Roller rotates freely.

(3) Tighten the Pad Roller Arm Adjusting Screw Locknut and check the adjustment.

3.13 Sprocket Replacement

a. Open the Pad Rollers.

b. Remove the Sprocket Fastening Screw and the sprocket. Be sure that the spring washer and thrust washer behind the sprocket remain on the stud.

c. Replace parts as necessary and reassemble.

3.14 Upper or Lower Guide Roller Replacement

a. Remove the Guide Roller Fastening Screw and the Guide Roller.

b. Replace parts as necessary and reassemble, making sure that the Guide Roller rotates freely.

3.15 Upper or Lower Tension Roller Replacement

a. Remove the Roller Fastening Screw and the Roller. Be sure that the washers behind the Tension Rollers remain on the stud.

CAUTION: Be careful not to bend the stud. If the stud is bent, the film will be forced against one of the flanges on the upper Stabilizer Drum and flutter will increase.

b. Replace parts as required and reassemble, making sure that the roller rotates freely.

c. Adjust per the following paragraph, if required.

3.16 Upper and Lower Tension Roller Adjustment

a. With film running through the soundhead, the center of the Upper and Lower Tension Rollers should be equi-distant from the center of the Upper and Lower Stabilizer Drum Shafts respectively.

b. Adjust as follows:

(1) Loosen the Tension Roller Adjustment Locking Screw one quarter turn.

(2) Rotate the Tension Roller Adjusting Screw until the Tension Rollers are in proper position and tighten the Tension Roller Adjustment Locking Screw.

3.17 Upper or Lower Stabilizer Drum Replacement

a. Remove the Flywheel Fastening Screw, Washer and the Flywheel on the non-operating side.

b. Remove the Pin, Flat Washer, Spring Washer and Thrust Washer from the shaft.

c. Withdraw the Stabilizer Drum and Shaft from the operating side carefully in view of the ball bearings at both ends of the shaft.

d. Replace parts, as required, and reassemble.

3.18 Magnetic Pickup Head Replacement

a. Disconnect the Cable Connector from the Magnetic Head.

b. Remove the four Magnetic Head Mounting Screws and the shield and head from the bracket.

c. Replace the head, reassemble and adjust per the following paragraph.

3.19 Magnetic Pickup Head Adjustment

NOTE: Magnetic Soundheads are shipped with the Magnetic Pickup Head precisely adjusted. Adjustments should be made at installation only when there is definite evidence that the factory setting has been disturbed. When the Magnetic Pickup Head is replaced, the adjustment procedure below must be followed.

a. Precise adjustment of each Magnetic Pickup Head is essential to obtain maximum uniform output. The gain of the Pre-Amplifier associated with each machine must be adjusted so that the level as measured at the output of the power amplifier is the same for each machine.

b. The following sequence of adjustments is recommended with the two-position switch in the Magnetic Soundhead set on SINGLE TRACK.

(1) Make the visual preliminary lateral adjustment per paragraph "c" below.

(2) Make the pressure adjustment per paragraph "d" below.

(3) Adjust the gain of each AM-1065 Pre-Amplifier per paragraph "c" below.

(4) Complete the lateral and azimuth adjustments per paragraphs "e", "f" and "g" below.

c. Visual Preliminary Lateral Adjustment

(1) Thread a magnetic sound sound film in the soundhead.

(2) Loosen the Lateral Adjustment Locking Screw and turn the Lateral Adjusting Screw until track #1 on the film and on the magnetic pickup head are in alignment visually.

(3) Tighten the Lateral Adjustment Locking Screw.

d. Pressure Adjustment

(1) Thread a 1 KC (4-track level balance) test film in the soundhead.

NOTE: This film loop is threaded in the normal manner except that it is routed over (instead of under) the Upper Guide Roller and around the Upper Feed Sprocket in the Projector Mechanism.

(2) Turn the motor manually, check the running of the film and turn the motor switch ON.

(3) Loosen the Pressure Adjustment Locking Screw approximately one-half turn.

(4) Rotate the Pressure Adjusting Screw so that the film runs smoothly off the Upper Stabilizer Drum without any tendency to ride up on either of the flanges.

(5) Tighten the Pressure Adjustment Locking Screw.

e. Final Lateral Adjustment

(1) Terminate the output of the power amplifier in a matching resistive load.

(2) Connect an AC voltmeter (1,000 ohms/volt sensitivity or better) across the output of the power amplifier.

(3) With the 1 KC film loop running in each machine successively, loosen the Lateral Adjustment Locking Screw.

(4) Turn the Lateral Adjusting Screw to obtain the maximum voltage reading on the AC voltmeter.

f. The Lateral and Pressure Adjustments are interacting. Paragraphs "d" and "e" should be repeated until voltage readings for both machines are a maximum.

g. Azimuth Adjustment.

NOTE: The two-position switch should still be on SINGLE TRACK, the power amplifier terminated and the AC voltmeter connected as before.

(1) Thread an 8 KC azimuth test film, in each machine successively, in the same manner as the 1 KC test film.

(2) With the film running, loosen the Azimuth Adjustment Locking Screw approximately one-half turn.

(3) Turn the Azimuth Adjusting Screw to obtain the maximum voltage reading.

(4) Tighten the Azimuth Adjustment Locking Screw.

3.2 AM-1065 PRE-AMPLIFIER

3.21 The gain of the Pre-Amplifier, associated with each machine, is adjusted in conjunction with the magnetic Pickup Head adjustments, described in paragraph 3.19, so that each machine output as measured at the output of the power amplifier is the same.

3.22 Initially set each Pre-Amplifier gain control, R-10, in mid-position.

3.23 Adjust the R-10, as required, when the lateral and azimuth adjustments of the Magnetic Pickup Head are made so that the output of each machine is the same.

3.3 AM-211 CHANGEOVER CABINET

3.31 Changeover Switch Removal

a. Depress the Changeover Button and rotate so that the set screw is accessible inside the cabinet.

b. Loosen the Set Screw and slide the button from the switch shaft. Retain the spring.

c. Through the hole in the Cabinet Cover, remove the Changeover Switch Fastening Nut.

d. Remove the Switch from the Bracket and disconnect the wires.

e. Reconnect the wires to the replacing Switch.

3.4 PU-1011 PRE-AMPLIFIER POWER SUPPLY

3.41 Power Transformer Strapping

a. At T1, the green wire should be connected in accordance with the following table for the average line voltage during operating hours.

Average Line Voltage	Connect to T3 Tap
120-130	125 Volt
110-120	115 Volt (Connection as shipped)
100-110	105 Volt

NOTE: Average line voltage is the average of the voltage readings taken during operating hours. If the average line voltage is above or below the above limits, the cooperation of the Power Company should be requested to bring the voltage within the recommended 105-125 volt limits.

3.42 Heater Supply Adjustment

a. With all Pre-Amplifiers operating, connect a 20,000 ohm/volt voltmeter across terminals "-19V DC" and "+19V DC" and adjust R4 until the reading is exactly 19 volts DC.

3.43 Replacement

a. Disconnect each of the cable form wires from the terminal strip.

b. Remove the four Power Supply Fastening Screws and the Power Supply.

c. Install the replacing unit and reconnect the wires.

3.5 AM-1079 WARPING UNIT - (Refer to Drawing SK-951).

3.51 Balance and Warping Adjustments

a. Adjust the system gain so that under normal operating conditions the volume control in the AM-207 System Selector Box is in about mid-position.

3.52 Make careful listening tests throughout the auditorium and adjust the frequency response, as required, to obtain the highest quality sound in the auditorium.

ASSOCIATED DRAWINGS

Schematic	Wiring Diagram		
W-1145	W-1147	AM-207	System Selector Box
W-1172	W-1171	AM-211	Four Channel Changeover Cabinet
W-1150	W-1155	AM-1065	Pre-Amplifier
	G-2401	AM-1066	Pre-Amplifier Cabinet
	AM-1079	AM-1079	Warping Unit
	SK-951	Balance and Warping Adjustments	
	I-2257	System Conduit Layout	
	W-1187	System Wiring Diagram	
W-1153	W-1152	PU-1011	Pre-Amplifier Power Supply
	G-2386	PU-1012	Pre-Amplifier Power Supply Cabinet

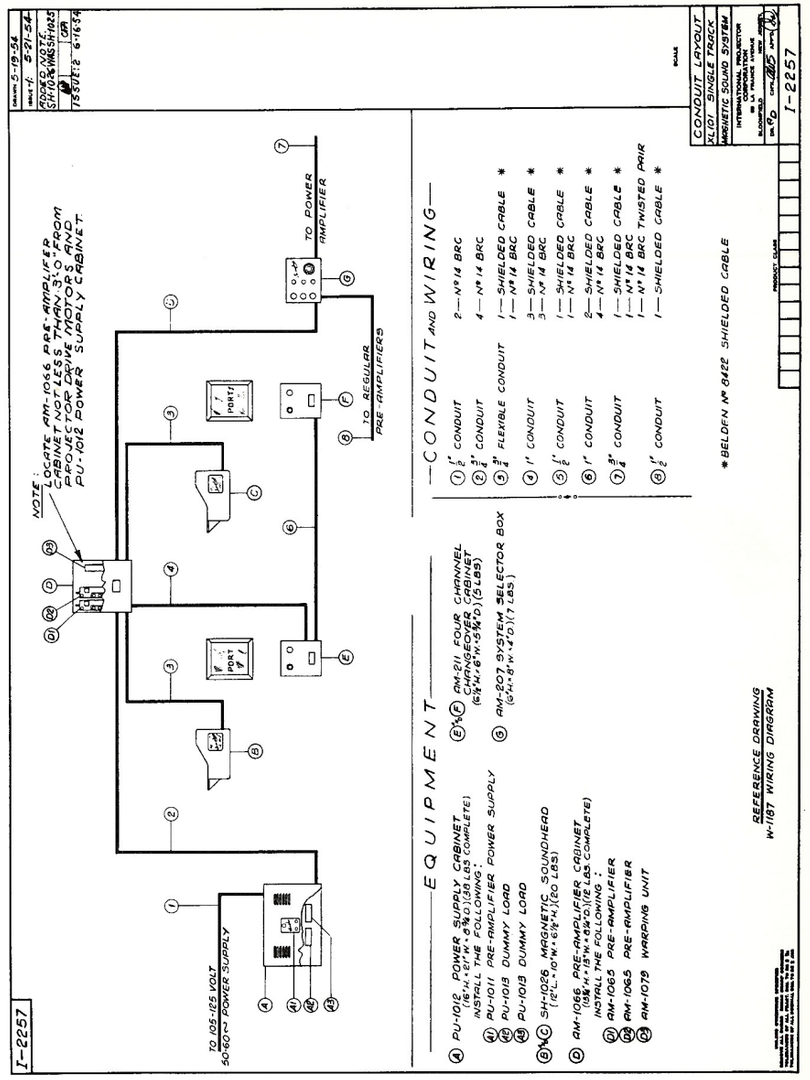

FIGURE 1
XL101 SINGLE CHANNEL
MAGNETIC SOUND SYSTEM
CONDUIT LAYOUT

Issued by
Engineering Department
Printed in U.S.A.

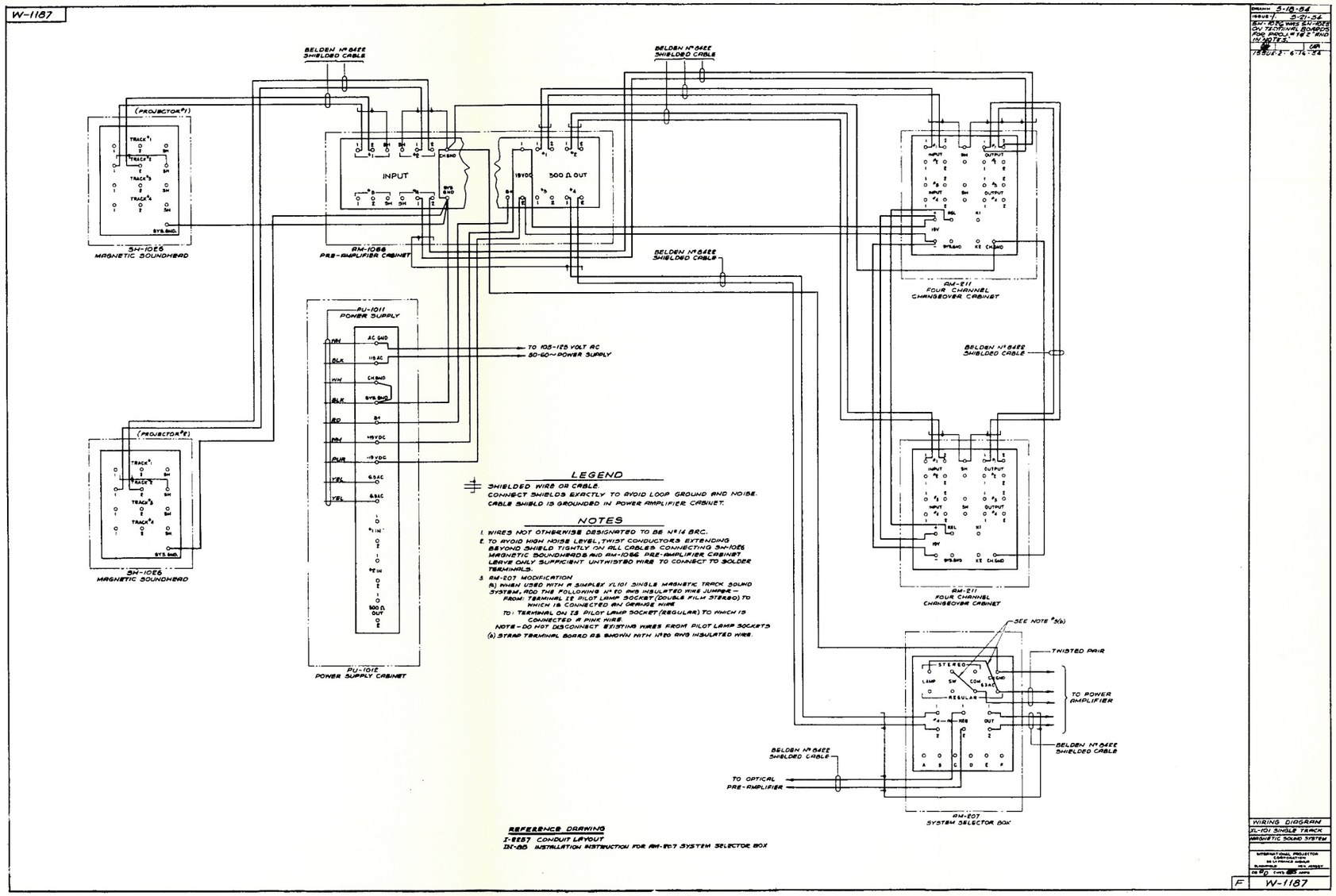

Issued by
Engineering Department
Printed in U.S.A.

FIGURE 2
XL101 SINGLE CHANNEL
MAGNETIC SOUND SYSTEM
WIRING DIAGRAM

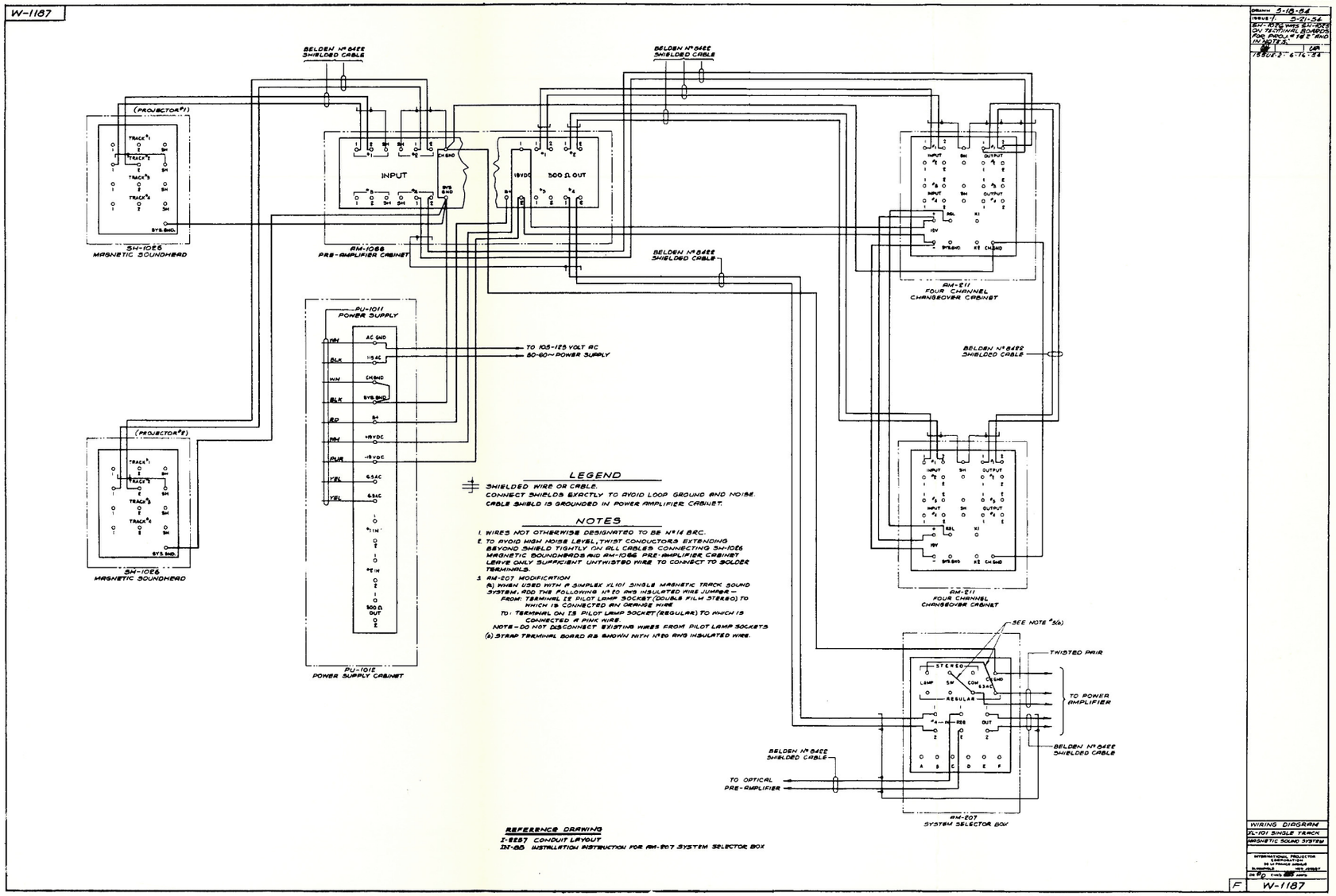

Issued by
Engineering Department
Printed in U.S.A.

FIGURE 2
XL101 SINGLE CHANNEL
MAGNETIC SOUND SYSTEM
WIRING DIAGRAM

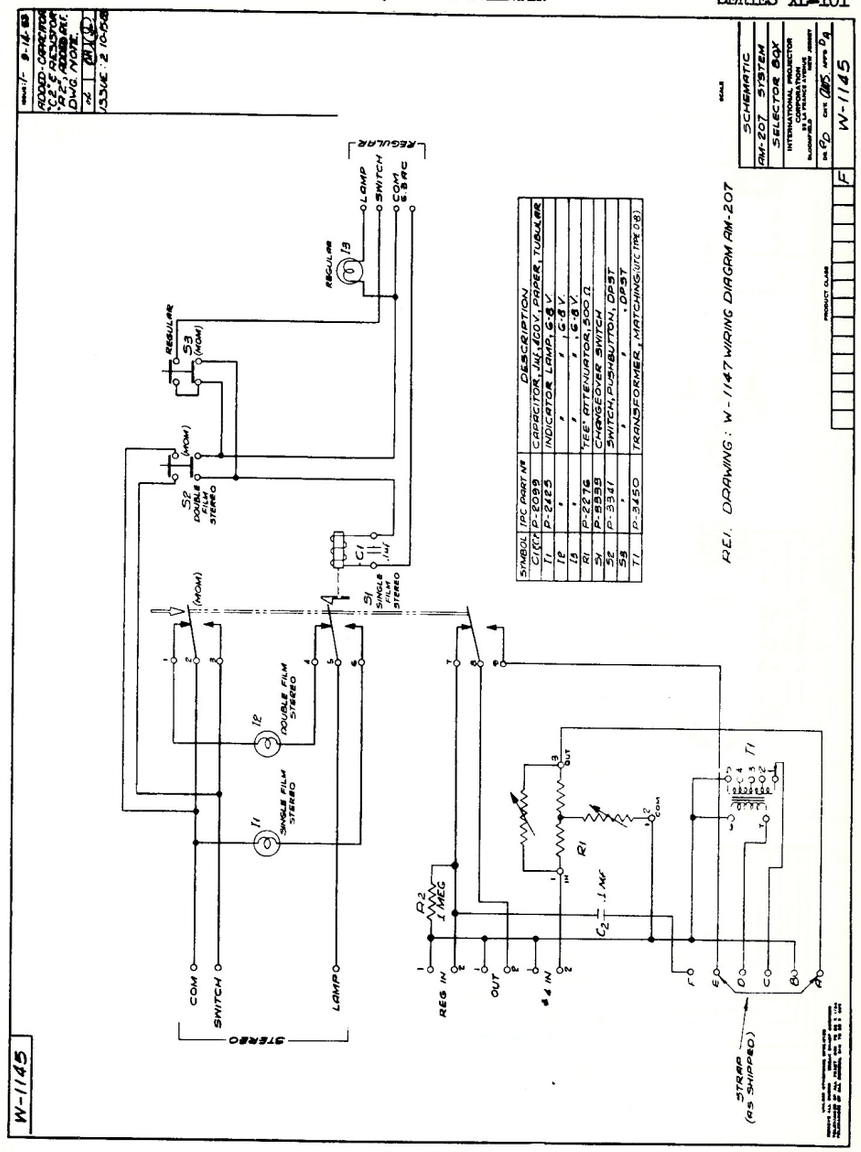

SYMBOL	TPC PART Nº	DESCRIPTION
C1,C2	P-2099	CAPACITOR, .1MF, 400V, PAPER, TUBULAR
I1	P-2185	INDICATOR LAMP, 6.8 V.
I2	"	" " 6.8 V.
I3	"	" " 6.8 V.
R1	P-2276	"T" ATTENUATOR, 500 Ω
S2	P-2278	CHANGEOVER SWITCH, DPDT
S3	P-3341	SWITCH, PUSHBUTTON, DPST
S1	"	" " DPST
T1	P-3450	TRANSFORMER, MATCHING (UTC TYPE OB)

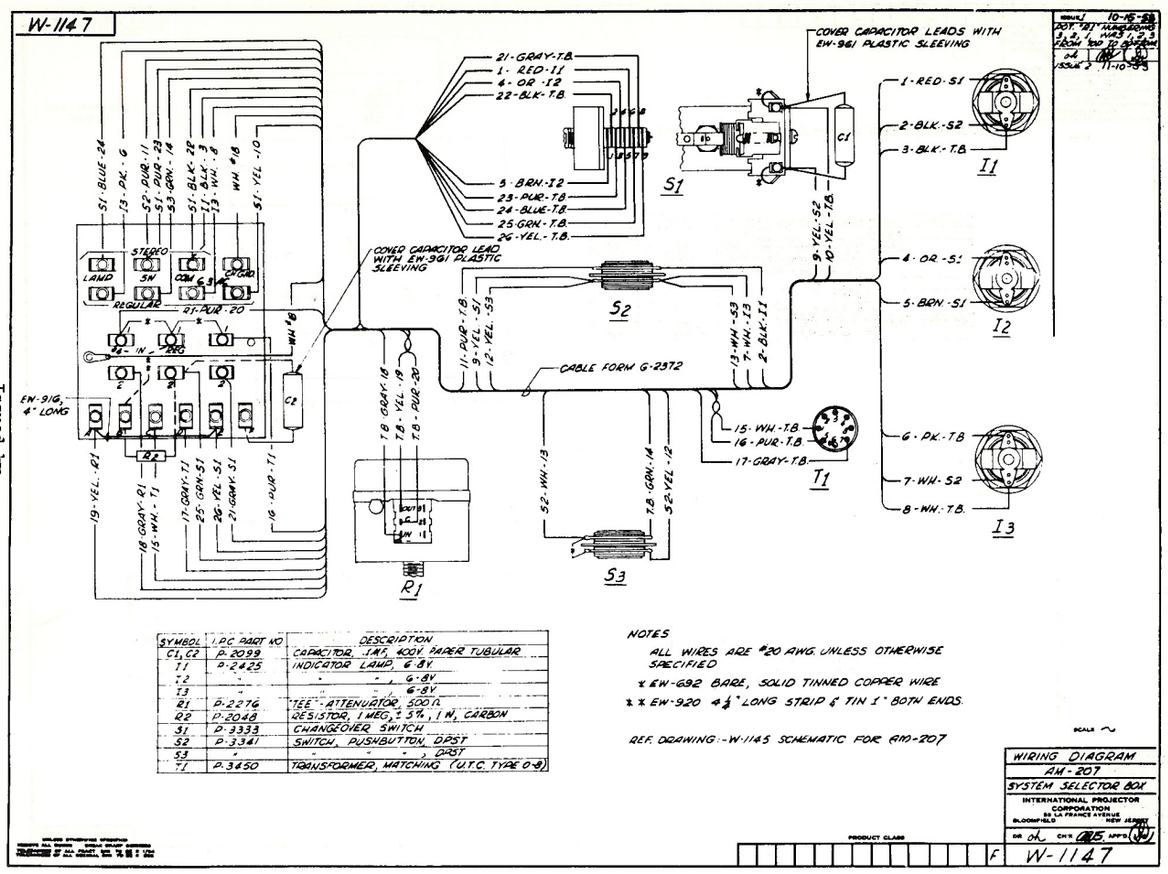

SYMBOL	I.P.C. PART NO	DESCRIPTION
C1, C2	P-2099	CAPACITOR, .1 MF, 400V, PAPER TUBULAR
I1	P-2425	INDICATOR LAMP, 6-8V.
I2	"	" " 6-8V
I3	"	" " 6-8V
R1	P-2276	TEE-ATTENUATOR, 500Ω
R2	P-2048	RESISTOR, 1 MEG, ± 5%, 1 W, CARBON
S1	P-3333	CHANGEOVER SWITCH
S2	P-3341	SWITCH, PUSHBUTTON, DPST
S3	"	" " DPST
T1	P-3450	TRANSFORMER, MATCHING (U.T.C. TYPE O-8)

NOTES
ALL WIRES ARE #20 AWG. UNLESS OTHERWISE SPECIFIED
* EW-692 BARE, SOLID TINNED COPPER WIRE
** EW-920 4½" LONG STRIP & TIN 1" BOTH ENDS.

REF. DRAWING:-W-1145 SCHEMATIC FOR RM-207

WIRING DIAGRAM
AM-207
SYSTEM SELECTOR BOX
INTERNATIONAL PROJECTOR CORPORATION
W-1147

Issued by
Engineering Department
Printed in U.S.A.

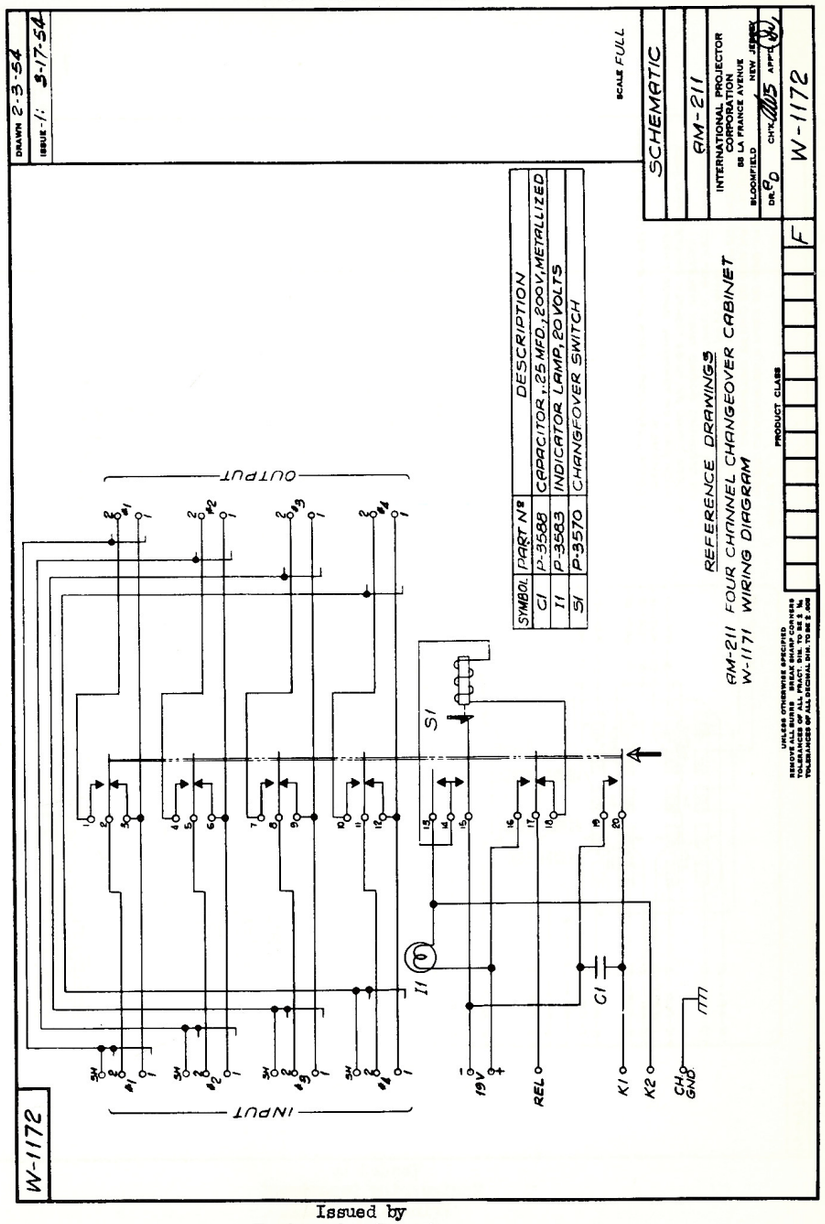

Issued by
Engineering Departmen
Printed in U.S.A.

W-1171

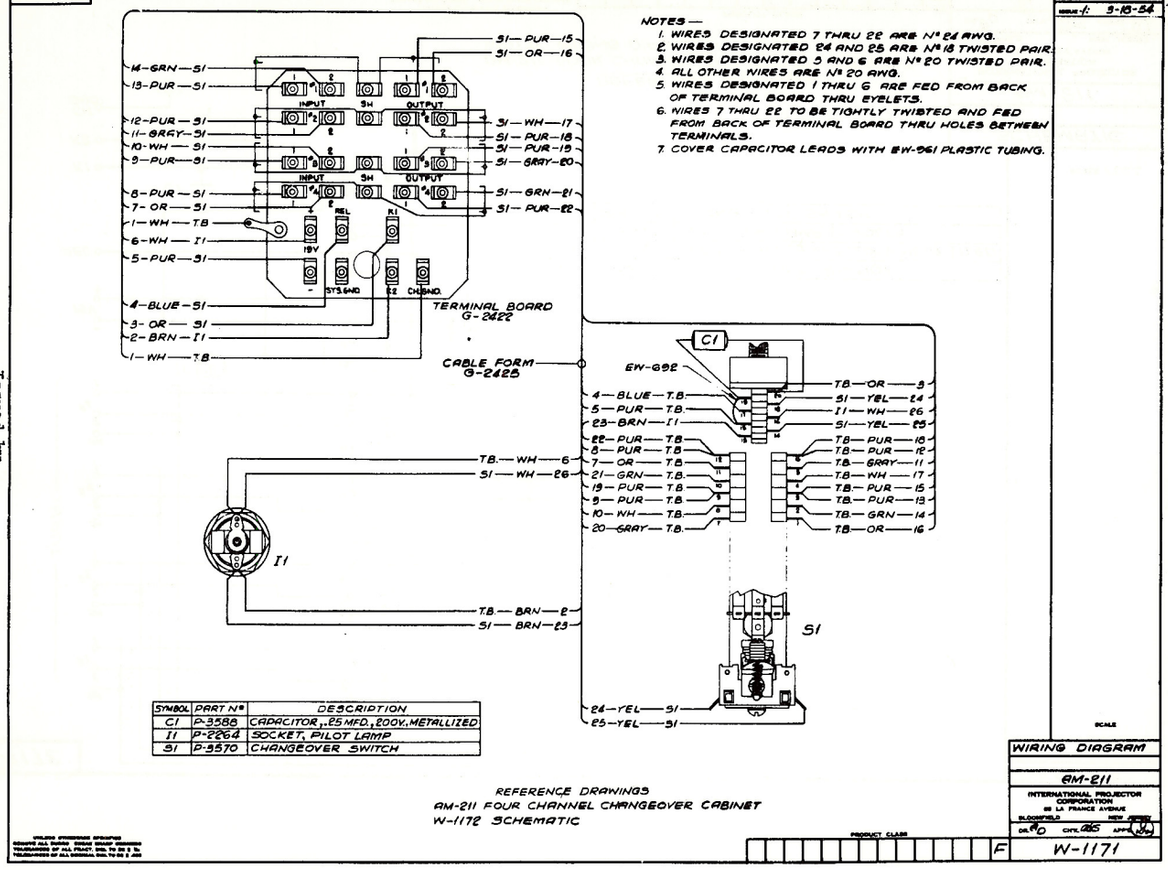

SYMBOL	PART Nº	DESCRIPTION
C1	P-3588	CAPACITOR, .25 MFD., 200V., METALLIZED
I1	P-2264	SOCKET, PILOT LAMP
S1	P-3570	CHANGEOVER SWITCH

REFERENCE DRAWINGS
AM-211 FOUR CHANNEL CHANGEOVER CABINET
W-1172 SCHEMATIC

DRAWN 5-11-54
ISSUED 5-18-54
SCALE
WIRING DIAGRAM
AM-211
INTERNATIONAL PROJECTOR CORPORATION
60 LA FRANCE AVENUE
BLOOMFIELD NEW JERSEY
DR. CHK. APP.
PRODUCT CLASS F
W-1171

Issued by
Engineering Department
Printed in U.S.A.

W-1150

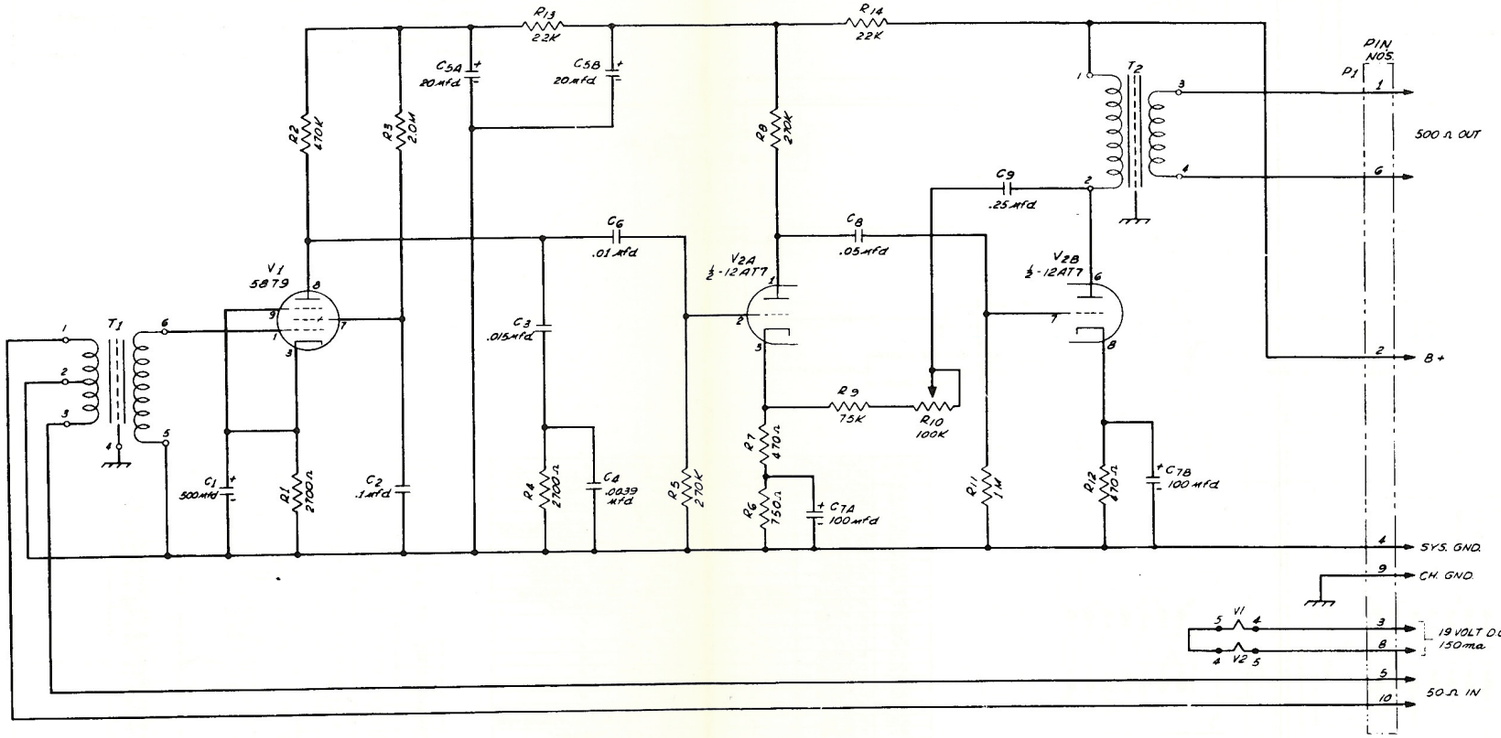

SYMBOL	I.P.C. PART NO.	DESCRIPTION
R1	P-2127	RESISTOR, 2700Ω, 1 W, CARBON
R2	P-2046	" , 470K, 1W, "
R3	P-2074	" , 2.0M, 1W, "
R4	P-2127	" , 2700Ω, 1W, "
R5	P-2055	" , 270K, 1W, "
R6	P-1004	" , 750Ω, 1W, "
R7	P-2075	" , 470Ω, 1W, "
R8	P-2055	" , 270K, 1W, "
R9	P-1013	" , 75K, 1W, "
R10	P-1076	" , 100K, 2W, POTENTIOMETER
R11	P-2048	" , 1M, 1W, CARBON

SYMBOL	I.P.C. PART NO.	DESCRIPTION
R12	P-2075	RESISTOR, 470Ω, 1W, CARBON
R13	P-2126	" 22K, 1W, "
R14	P-2126	" 22K, 1W, "
C1	P-3415	CAPACITOR, 500 mfd, 6V DCW, ELECTROLYTIC
C2	P-2099	" .1 mfd, 400V, PAPER
C3	P-3417	" .015 mfd, 300V, MICA
C4	P-3420	" .0039 mfd, 500V, MICA
C5A	P-3416	" 20/20 mfd, 450V DCW, ELECTROLYTIC
C5B		
C6	P-3421	" .01 mfd, 500V MICA

SYMBOL	I.P.C. PART NO.	DESCRIPTION
C7A	P-3418	CAPACITOR, 100/100 mfd, 10V DCW, ELECTROLYTIC
C7B		
C8	P-3422	" .05 mfd, 400V, PAPER
C9	P-3419	" .25 mfd, 600V, METALIZED
T1	P-3427	TRANSFORMER, INPUT
T2	P-3428	TRANSFORMER, OUTPUT
P1	P-2063	MALE PANEL CONNECTOR - 10 PRONG
V1	P-3423	VACUUM TUBE, 5879
V2A	P-3424	" " , 12AT7
V2B		

ASSOCIATED DWGS
AM-1065 - ASSEMBLY
W-1155 - WIRING DIAGRAM

DRAWN 10-5-53
ISSUED 11-11-53

SCALE ~

SCHEMATIC
DRE-AMPLIFIER
AM-1065
INTERNATIONAL PROJECTOR CORPORATION
W-1150

ALTEC SERVICE CORPORATION
SIMPLEX
SOUND EQUIPMENT BULLETIN

W-1155

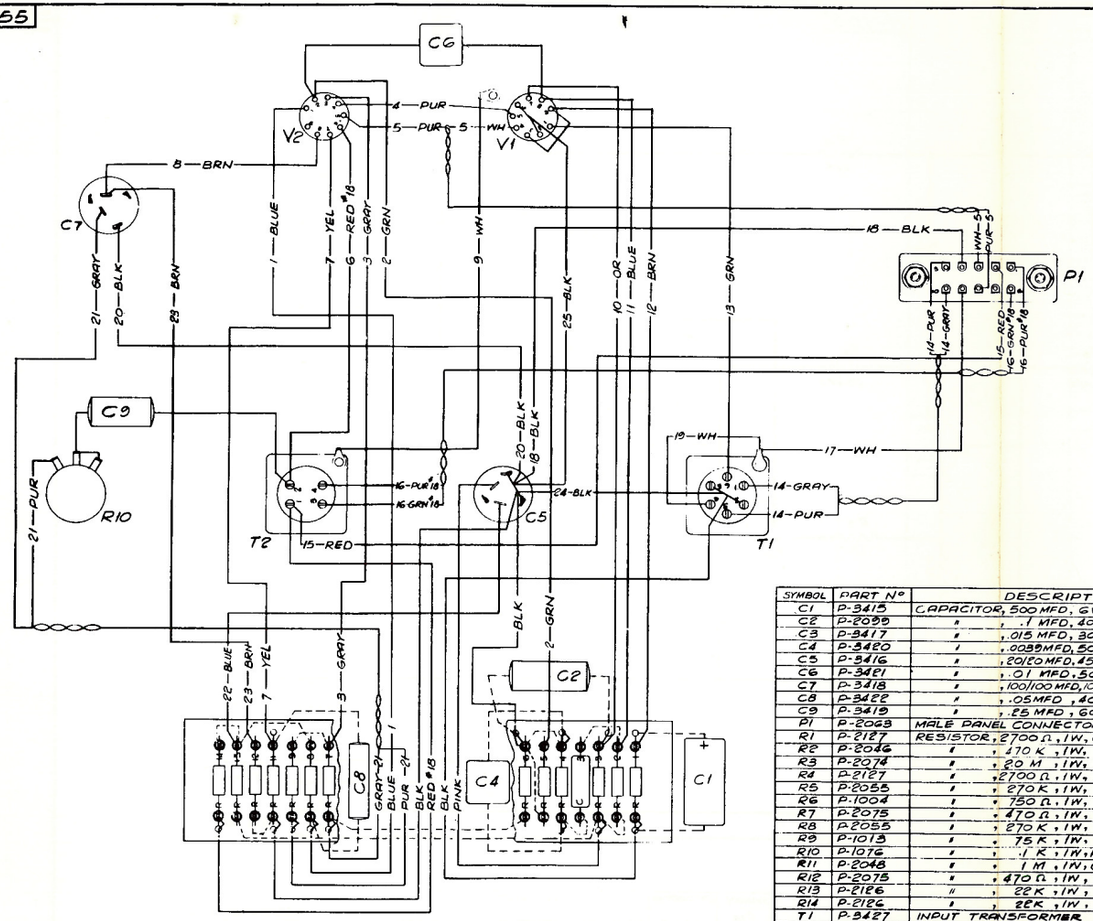

SUGGESTED METHOD FOR WIRING

1. SOLDER WIRES TO P1 (MALE PANEL CONNECTOR) BEFORE ASSEMBLY OF PLUG TO CHASSIS
2. MOUNT CAPACITOR C9.
3. SOLDER WIRES BETWEEN COMPONENTS ON CHASSIS.
4. SOLDER WIRES AND CAPACITOR C6 TO TUBE SOCKETS V1 AND V2 BEFORE ASSY OF SUPPORT TO CHASSIS.
5. MOUNT SUPPORT TO CHASSIS AND SOLDER WIRES TO COMPONENTS ON CHASSIS.
6. SECURE MOUNTING STRIP TO CHASSIS AND SOLDER WIRES BETWEEN COMPONENTS ON CHASSIS AND MOUNTING STRIP.
7. MAINTAIN TWIST IN WIRE AS CLOSE AS POSSIBLE TO TERMINALS

DRAWN 10-27-53
ISSUE 1 11-6-53

SYMBOL	PART Nº	DESCRIPTION
C1	P-3415	CAPACITOR, 500 MFD., 6V., ELECTROLYTIC
C2	P-2099	" .1 MFD., 400V., PAPER
C3	P-3417	" .015 MFD., 300V., MICA
C4	P-3420	" .0035 MFD., 500V., "
C5	P-3416	" .20/20 MFD., 450V., ELECTROLYTIC
C6	P-3421	" .01 MFD., 500V., MICA
C7	P-3418	" 100/100 MFD., 10V., ELECTROLYTIC
C8	P-3422	" .05 MFD., 400V., PAPER
C9	P-3419	" .25 MFD., 600V., PAPER
P1	P-2088	MALE PANEL CONNECTOR-10 PRONG
R1	P-2127	RESISTOR, 27.00 Ω., 1W., CARBON
R2	P-2046	" .470 K., 1W., "
R3	P-2074	" .20 M., 1W., "
R4	P-2127	" 27.00 Ω., 1W., "
R5	P-2055	" .270 K., 1W., "
R6	P-1004	" .750 Ω., 1W., "
R7	P-2075	" .470 Ω., 1W., "
R8	P-2055	" .270 K., 1W., "
R9	P-1013	" .75 K., 1W., "
R10	P-1076	" .1 K., 1W., POTENTIOMETER
R11	P-2048	" 1 M., 1W., CARBON
R12	P-2075	" .470 Ω., 1W., "
R13	P-2126	" 22 K., 1W., "
R14	P-2126	" 22 K., 1W., "
T1	P-3427	INPUT TRANSFORMER
T2	P-3428	OUTPUT TRANSFORMER
V1	P-3423	VACUUM TUBE 5879
V2	P-3424	" " 12AT7

WIRE #	FROM	TO	LENGTH	COLOR	PART #
1	V2	R8	4 3/4	BLUE	EW-912
2	V2	R5	2 3/4	GREEN	-917
3	V2	R7	2 1/4	GRAY	-909
4	V2	V1	1 3/4	PUR	-908
5	V2+V1	P1	7 1/2	PUR WH TW	-1009
6	V2	T2	2	RED	-953
7	V2	R11	2 3/4	YEL	-916
8	V2	C7	2 3/4	BRN	-913
9	V1 GND	T2 GND	1 1/2	WH	-919
10	V1	R3	2 1/4	OR	-956
11	V1	R2	2 1/2	BLUE	-918
12	V1	R1	2 1/4	BRN	-913
13	V1	T1	1 1/2	GRN	-917
P5	V1	C6	2 3/4	BLK	-920
14	P1	T1	2 3/4	PUR GRAY TW	-954
15	P1	T2	8	RED	-957
16	P1	T2	7 1/2	PUR GRN TW	-948
17	P1	T1 GND	4 1/2	WH	-919
18	P1	C6	6 3/4	BLK	-920
19	T1	T1 GND	3	WH	-919
20	C5	C7	6 3/4	BLK	-920
21	C7	R7	7	GRAY TW PUR	-944
22	C5	R13	6 1/2	BLUE	-954
23	C7	R12	2 1/4	BRN	-913
24	C5	T1	2 1/4	BLK	-920

SEE NOTE 7

REFERENCE DWGS
W-1150 SCHEMATIC
AM-1065 PRE-AMPLIFIER

NOTE
1. STRAPS ARE EW-692 SOLID, TINNED COPPER WIRE.
2. COVER STRAP AT "V1" BETWEEN PINS 3 AND 5, AND CAPACITOR LEADS WITH EW-961 BLACK PLASTIC SLEEVING.
3. WIRES ARE Nº 20 AWG, UNLESS OTHERWISE SPECIFIED.

SCALE

WIRING DIAGRAM
AM-1065 PRE-AMPLIFIER
INTERNATIONAL PROJECTOR CORPORATION
96 LA FRANCE AVENUE
BLOOMFIELD NEW JERSEY
DR. PD CHK. MW APP'D.

UNLESS OTHERWISE SPECIFIED
REMOVE ALL BURRS BREAK SHARP EDGES
TOLERANCES OF ALL FRACT. DIM. TO BE ± 1/64
TOLERANCES OF ALL DECIMAL DIM. TO BE ± .010

PRODUCT CLASS F

W-1155

Issued by
Engineering Department
Printed in U.S.A.

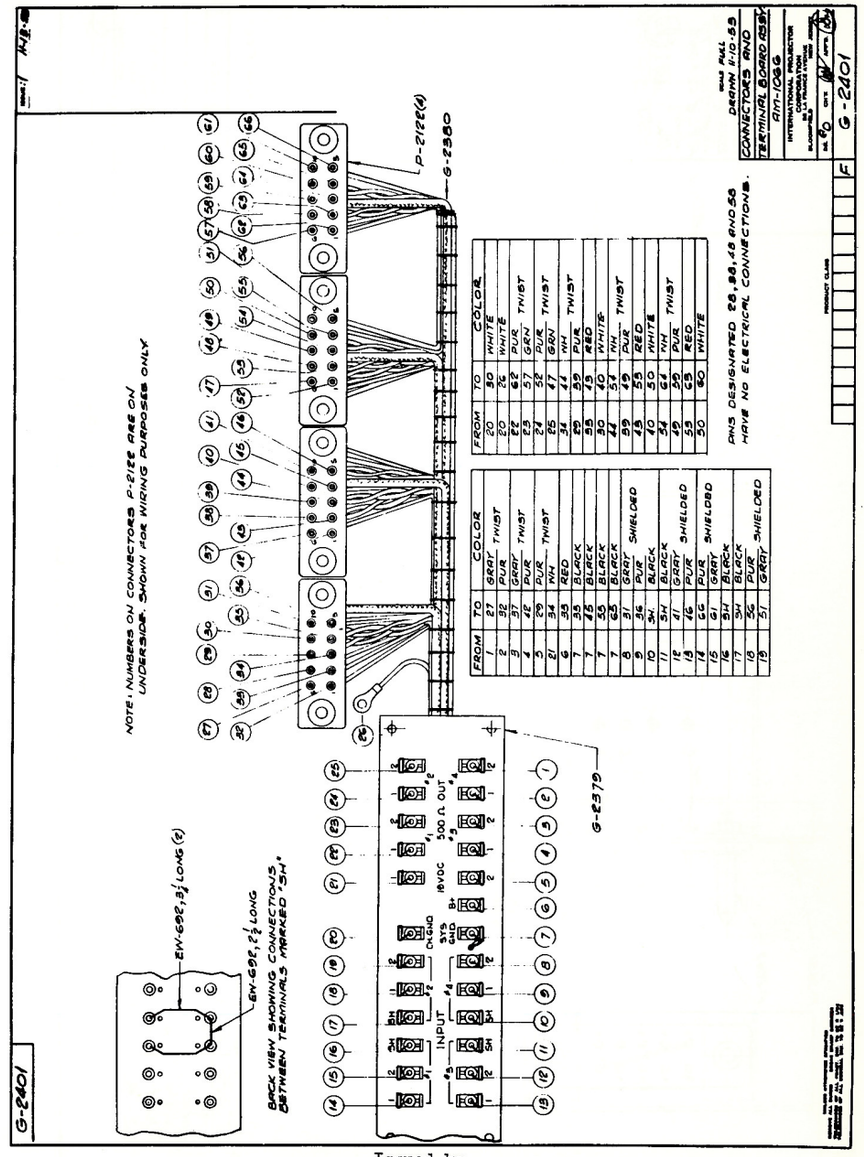

Issued by
Engineering Department
Printed in U.S.A.

40.385
SIMPLEX XL SINGLE FILM
MAGNETIC SOUND SYSTEMS
SERIES XL-101

ALTEC SERVICE CORPORATION
SIMPLEX
SOUND EQUIPMENT BULLETIN

AM-1079

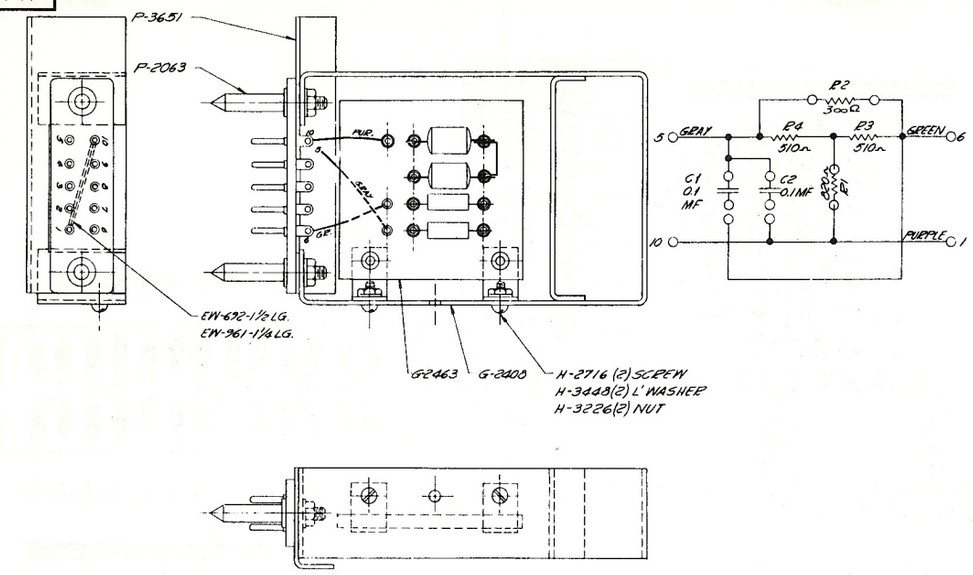

DRAWN 5-19-54
ISSUE :-1 5-21-54
CORRECTED G-2463 TO CONFORM WITH ISSUE C OF G-2463
MAC [illegible]
ISSUE 2-6-14-54
ADDED RESISTOR VALUE 300Ω TO R2, & REF DWG. NOTE.
MAC [illegible]
ISSUE 3-6-16-54

SCALE FULL

CONNECTOR WIRING

COLOR	PART NO.	TO CONTACT
PUR.	EW-908	10
GRAY	EW-909	5
GREEN	EW-917	6
BARE	EW-632	1 & 10
SLEEVING	EW-961	

REF. DRAWING:- SK-551 BALANCE AND WARPING ADJUSTMENTS.

WARPING UNIT

INTERNATIONAL PROJECTOR CORPORATION
55 LA FRANCE AVENUE
BLOOMFIELD NEW JERSEY

DR. GN. CHK. [illegible] APP'D. [illegible]

UNLESS OTHERWISE SPECIFIED
REMOVE ALL BURRS BREAK SHARP CORNERS
TOLERANCES OF ALL FRACT. DIM. TO BE ± 1/64
TOLERANCES OF ALL DECIMAL DIM. TO BE ± .005

PRODUCT CLASS F

AM-1079

Issued by
Engineering Department
Printed in U.S.A.

ISSUE:/ 3-27-64

AM-212 BALANCE & WARPING CABINET ADJUSTMENTS

INTERNATIONAL PROJECTOR CORPORATION
85 CORNELISON AVENUE
BLOOMFIELD, NEW JERSEY

SCALE

PRODUCT CLASS

SK-951

HIGH FREQUENCY WARPING & BALANCE ADJUSTMENT

SYS. GAIN ADJ.	C-1,3,5, 7, 9 & 11	C-2,4,6, 8, 10 & 12	STAND. PREAMP FIG.	RELATIVE RESPONSE - 1000 CYCLES CPS REFERENCE CYCLES PER SECOND					
				2000	3000	4000	5000	6000	7000	8000
	OPEN	OPEN	1 (a)	0	0	0	0	0	0	+1.5
	OPEN	0.1	2	0	-1	-1.5	-2	-2.6	-3.2	-3.8
	OPEN	0.15	2	-.5	-2	-3.2	-4	-4.5	-5.4	-6.2
	0.1	0.1	3	-1.5	-3	-4.2	-5.5	-6.6	-7.5	-8.4
	0.15	0.15	3	-2.5	-4.3	-6.0	-8.0	-9.3	-10.5	-11.6
-4	0.1	OPEN	4	+.5	+.7	+.9	+1.2	+1.5	+1.7	+2.0
-8	0.15	0.1	5	+.5	+.7	+.9	+1.2	+1.5	+1.7	+2.0
-8	0.1	OPEN	4	+1.0	+1.7	+2.5	+3.0	+3.5	+4.0	+4.3
-8	0.1	0.1	6	+2.0	+2.7	+3.4	+4.0	+4.4	+4.8	+5.2
-12	0.1	0.15	5	+.7	+1.0	+1.3	+1.5	+1.8	+2.1	+2.4
-12	0.1	0.1	5	+.9	+1.5	+2.4	+2.9	+3.3	+3.7	+4.0
-12	0.1	OPEN	4	+2.1	+2.9	+3.7	+4.4	+5.1	+5.7	+6.5

NOTES: (a) RESPONSE AS SHIPPED.
(b) TYPICAL RESPONSE, TOLERANCE ±1dB
SIGNAL SOURCE- OSCILLATOR WITH
500 OHMS IN SERIES.

SYSTEM GAIN ADJUSTMENT

SYS. GAIN-db	RESISTANCE IN OHMS C-1,3,5,7,9 & 11	C-2,4,6,8,10 & 12
0	OPEN	0
-2	2000	130
-4 (a)	820	300
-6	510	510
-8	330 (b)	750 (b)
-10	240	1000
-12	160 (b)	1500 (b)

NOTES: (a) AS SHIPPED.
(b) RESISTORS SUPPLIED IN KIT
S-2442 SHIPPED WITH AM-212.

FIG. 1

FIG. 2

FIG. 3

FIG. 4

FIG. 5

FIG. 6

TYPICAL STRAPPING - ONLY CHANNEL #1 - PROJECTOR #1 SHOWN.

Issued by
Engineering Department
Printed in U.S.A.

W-1153

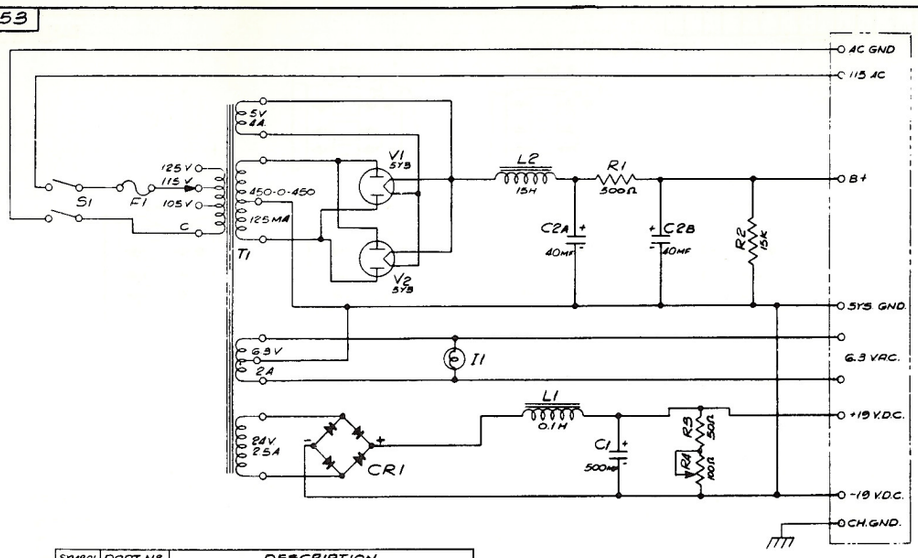

SYMBOL	PART N°	DESCRIPTION
C1	P-3488	CAPACITOR, 500 MF, 25 V, ELECTROLYTIC
C2	P-2084	" ,40-40 MF, 450 V, "
CR1	P-3504	SELENIUM RECTIFIER
F1	P-2592	FUSETRON, 1 AMP
I1	P-2825	LAMP, G-8 V.
L1	P-3486	REACTOR, FILTER - 0.1 H
L2	P-3485	" " " - 15 H
R1	P-3487	RESISTOR, 500 OHMS, 25 W. WIREWOUND
R2	P-3488	" ,15 K OHMS, 25 W. "
R3	P-3529	" 50 OHMS, 25 W. "
S1	P-2099	SWITCH, TOGGLE DPST
T1	P-3484	TRANSFORMER, POWER
V1	P-2130	VACUUM TUBE, 5Y3GT
V2	P-2130	" " ,5Y3GT
R4	P-3024	RESISTOR, 100 OHMS, 25 W. ADJUSTABLE

REFERENCE DRAWINGS
W-1152 WIRING DIAGRAM
PU-1011 POWER SUPPLY

ISSUE: 1- 11-19-58
ISSUE: 2- N°23-62

SCALE
DRAWN 10-21-58
SCHEMATIC
PU-1011 POWER SUPPLY

INTERNATIONAL PROJECTOR CORPORATION
BLOOMFIELD, NEW JERSEY
DR. PD CH'K APP'D

PRODUCT CLASS F W-1153

Issued by
Engineering Department
Printed in U.S.A.

ALTEC SERVICE CORPORATION
SIMPLEX
SOUND EQUIPMENT BULLETIN

W-1152

SYMBOL	PART Nº	DESCRIPTION
C1	P-3485	CAPACITOR, 500 MMF. 25V. ELECTROLYTIC
C2	P-2084	" .40-40 MF. 450V. "
CR1	P-3504	SELENIUM RECTIFIER
F1	P-2538	FUSETRON, 1 AMP
I1	P-2425	LAMP, 6-8 V
L1	P-3486	REACTOR, FILTER - 0.1 H
L2	P-3485	" " - 15 H
R1	P-3487	RESISTOR, 300 Ω, 25W, WIREWOUND
R2	P-3488	" .15 K, 25W, "
R3	P-3529	" 50 Ω, 25W, "
S1	P-2089	SWITCH, TOGGLE DPST
T1	P-3484	TRANSFORMER, POWER
V1	P-2150	VACUUM TUBE, 5Y3GT
V2	P-2150	" " 5Y3GT
R4	P-3024	RESISTOR, 100 Ω, 25W, ADJUSTABLE

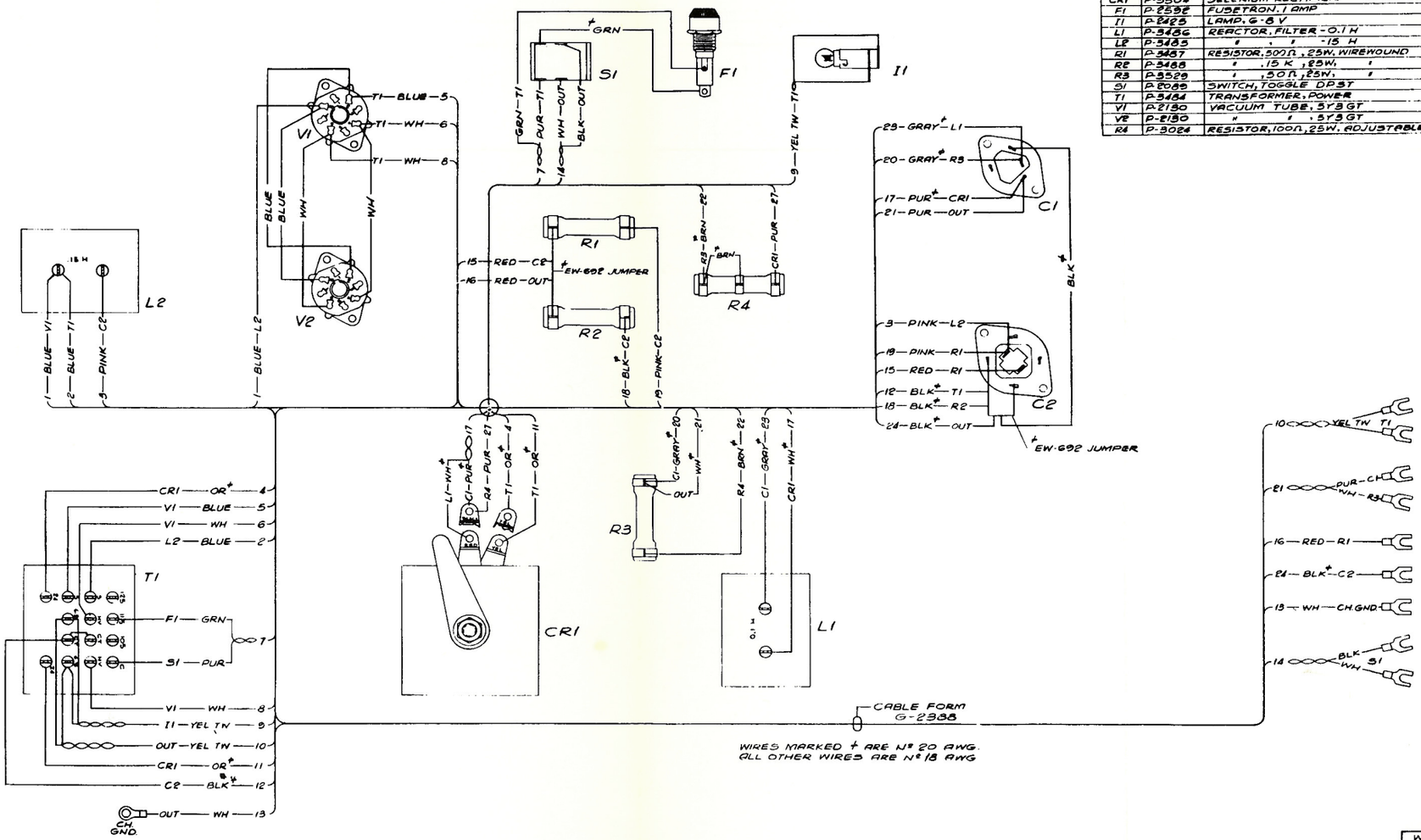

WIRES MARKED + ARE Nº 20 AWG.
ALL OTHER WIRES ARE Nº 18 AWG.

REFERENCE DWGS
W-1158 SCHEMATIC
PU-1011 POWER SUPPLY

DRAWN 10-29-53
ISSUE 1- 11-13-53
FI WIRE P-5492
ISSUE 2 11-23-53

WIRING DIAGRAM
PU-1011 POWER SUPPLY
INTERNATIONAL PROJECTOR CORPORATION
BLOOMFIELD, NEW JERSEY

PRODUCT CLASS F

W-1152

Issued by
Engineering Department
Printed in U.S.A.

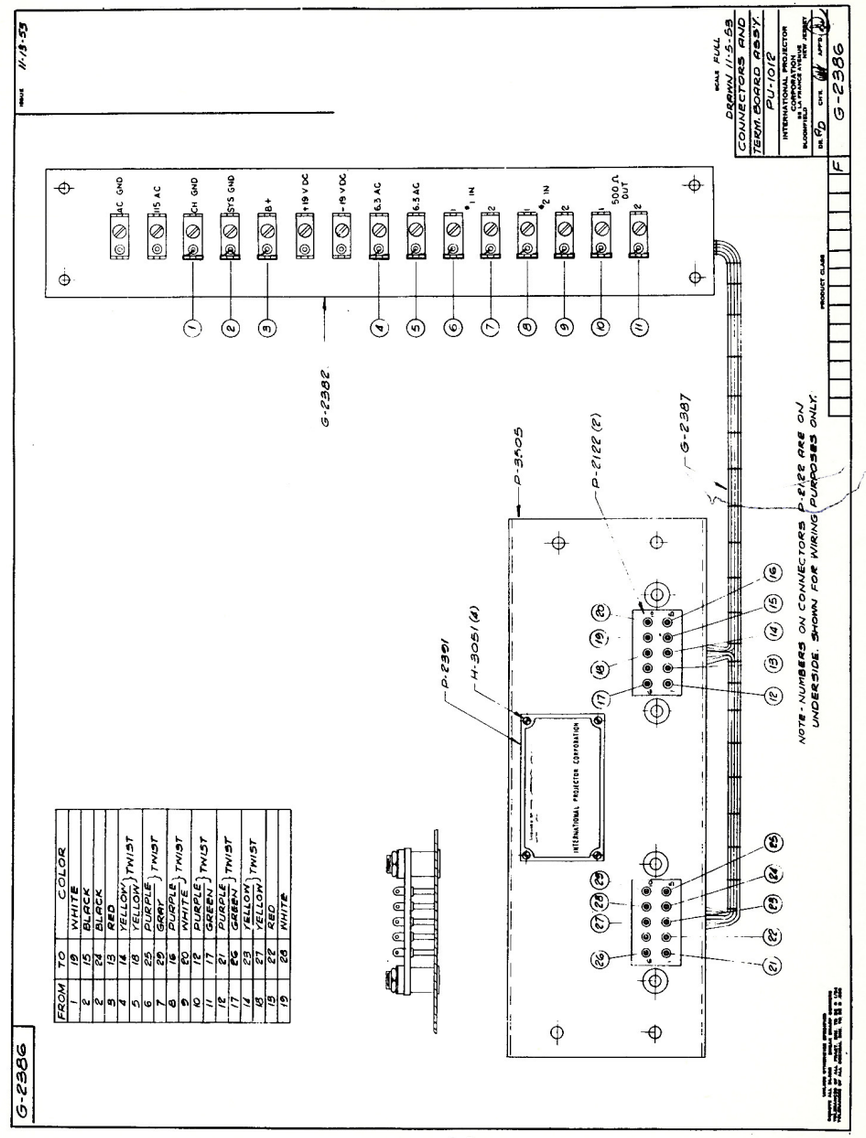

FROM	TO	COLOR
1	19	WHITE
2	15	BLACK
3	24	BLACK
4	13	RED
5	14	YELLOW } TWIST
6	18	PURPLE } TWIST
7	25	GREEN } TWIST
8	26	PURPLE } TWIST
9	16	WHITE } TWIST
10	20	PURPLE } TWIST
11	12	GREEN } TWIST
12	17	PURPLE } TWIST
17	21	GREEN } TWIST
14	26	YELLOW } TWIST
15	29	YELLOW } TWIST
16	27	RED
19	28	WHITE

Issued by
Engineering Department
Printed in U.S.A.

SIMPLEX THREE CHANNEL MAGNETIC STEREOPHONIC / OPTICAL SOUND SYSTEM
(EQUIPMENT REQUIREMENTS FOR CONVERSION OF AN EXISTING XL OPTICAL SOUND SYSTEM TO AN XL 500 3 CHANNEL STEREOPHONIC SYSTEM)

COMPONENT NUMBER	DESCRIPTION	XL2-11 TO 532-311	XL2-12 TO 532-312	XL4-12 TO 532-312	XL4-22 TO 532-322	XL6-12 TO 536-312	XL6-22 TO 536-322	XL6-24 TO 536-324
		← SPECIFY XL-500 SYSTEM REQUIRED →						
		← LESS THE FOLLOWING COMPONENTS →						
AM-1027	POWER AMPLIFIER	1	1	2	2	–	–	–
AM-1026	" "	–	–	–	–	1	1	1
LU-143	STAGE SPEAKER EQUIP.	1	–	–	–	–	–	–
LU-144	" " "	–	1	1	–	1	–	–
LU-145	" " "	–	–	–	1	–	1	–
LU-146	" " "	–	–	–	–	–	–	1
AM-1028	PRE-AMPLIFIER	1	1	1	1	1	1	1
AM-1031	SYSTEM CABINET (4 PLACE)	1	1	1	1	1	1	1
AM-1054	MONITOR AMP. & CONTROL PANEL	1	1	1	1	1	1	1
LU-142	MONITOR SPEAKER	1	1	1	1	1	1	1
LU-1121	SPEAKER NETWORK ASSY.	1	1	1	1	1	1	1
		ADDITIONAL EQUIPMENT REQUIRED						
AM-1092	XL OPTICAL CONVERSION KIT	1	1	1	1	1	1	1
	FOR FOUR CHANNEL INSTALLATION ADD:							
AM-1064	CONTROL UNIT	1	1	1	1	1	1	1
AM-1065	PRE-AMPLIFIER	1	1	1	1	1	1	1
P-3257	TRANSFORMER	1	1	1	1	1	1	1
LU-150	AUDITORIUM SPEAKER	← AS REQUIRED →						
LU-151	" "	← AS REQUIRED →						

EQUIPMENT REQUIREMENTS FOR A COMPLETE "NEW THEATRE"
XL-500 3 CHANNEL MAGNETIC STEREOPHONIC / OPTICAL SYSTEM

COMPONENT NUMBER	DESCRIPTION	532-38	532-39	532-311	532-312	536-312	536-322	536-324
		← SPECIFY XL-500 SYSTEM REQUIRED →						
		← PLUS THE FOLLOWING OPTICAL KIT →						
AM-1093	XL-500 NEW THEATRE EQUIP. KIT	*1	*1	*1	*1	*1	*1	*1
	FOR FOUR CHANNEL INSTALLATION ADD:							
AM-1026	POWER AMPLIFIER	–	–	–	–	1	1	1
AM-1027	" "	1	1	1	1	–	–	–
AM-1031	SYSTEM CABINET (4 PLACE)	1	1	1	1	1	1	1
AM-1037	SYSTEM CABINET KIT	1	1	1	1	1	1	1
AM-1091	XL-500 4th CHANNEL KIT	1	1	1	1	1	1	1
LU-150	AUDITORIUM SPEAKER	← AS REQUIRED →						
LU-151	" "	← AS REQUIRED →						

*FOR FOUR CHANNEL INSTALLATION ORDER AM-1093 OPTICAL KIT LESS ONE (1) AM-1034

3 Pages - Page 1

Issued by
Engineering Department
Printed in U. S. A.

August 23, 1955
Issue #1

SIMPLEX THREE CHANNEL MAGNETIC STEREOPHONIC / OPTICAL SOUND SYSTEMS (2ON)
(FOR MODERNIZATION OF ANY EXISTING OPTICAL SOUND SYSTEM OTHER THAN XL)

	COMPONENT NUMBER	DESCRIPTION	XL101	XL532 -38	XL532 -39	XL532 -311	XL532 -312	XL536 -312	XL536 -322	XL536 -324
REPRODUCER EQUIPMENT	SH-1025	MAGNETIC SOUNDHEAD	–	2	2	2	2	2	2	2
	SH-1026	" " " (MIXER TYPE)	2	–	–	–	–	–	–	–
	AM-211	FOUR CHANNEL CHANGEOVER CAB.	2	2	2	2	2	2	2	2
	AM-1079	WARPING UNIT	1	–	–	–	–	–	–	–
AMPLIFIER EQUIPMENT	AM-1026	POWER AMPLIFIER	–	–	–	–	–	3	3	3
	AM-1027	" "	–	3	3	3	3	–	–	–
	AM-1028	PRE-AMPLIFIER	–	1	1	1	1	1	1	1
	AM-1031	SYSTEM CABINET (4 PLACE)	–	1	1	1	1	1	1	1
	AM-1054	MONITOR AMP. & CONTROL PANEL	–	–	–	1	1	1	1	1
	AM-1055	SYSTEM CABINET KIT	–	–	–	1	1	1	1	1
	AM-1062	MONITOR CONTROL PANEL & SYSTEM CAB. KIT	–	1	1	–	–	–	–	–
	AM-1065	PRE-AMPLIFIER	2	3	3	3	3	3	3	3
	AM-1066	" " CABINET	1	1	1	1	1	1	1	1
	AM-1089	SYSTEM CONTROL CABINET	+	1	1	1	1	1	1	1
	PU-1011	PRE-AMPLIFIER POWER SUPPLY	1	1	1	1	1	1	1	1
	PU-1012	POWER SUPPLY CABINET	1	–	–	–	–	–	–	–
	PU-1014	" " "	–	1	1	1	1	1	1	1
LOUD - SPEAKER EQUIPMENT	LU-143	STAGE SPEAKER EQUIPMENT	–	–	–	3	–	–	–	–
	LU-144	" " "	–	–	–	–	3	3	–	–
	LU-145	" " "	–	–	–	–	–	–	3	–
	LU-146	" " "	–	–	–	–	–	–	–	3
	LU-148	" " "	–	3	–	–	–	–	–	–
	LU-160	" " "	–	–	3	–	–	–	–	–
	LU-1121	SPEAKER NETWORK ASSEMBLY	–	–	–	3	3	3	3	3
ACCESSORY EQUIPMENT	AM-207	SYSTEM SELECTOR BOX	1	–	–	–	–	–	–	–
	LU-142	MONITOR SPEAKER	–	1	1	1	1	1	1	1
	PU-1013	POWER SUPPLY DUMMY LOAD	2	–	–	–	–	–	–	–
EMERGENCY TUBE KITS	AM-1063	SPARE TUBE KIT	1	1	1	1	1	1	1	1
	AM-1067	" " "	–	1	1	1	1	–	–	–
	AM-1068	" " "	–	–	–	–	–	1	1	1
FOR FOUR CHANNEL INSTALLATION ADD:										
	*AM-1091	XL500 4th CHANNEL KIT	1	1	1	1	1	1	1	1
	LU-150	AUDITORIUM SPEAKER	← AS REQUIRED →							
	LU-151	" "	← AS REQUIRED →							
IF NEW FOURTH CHANNEL POWER AMPLIFIER EQUIPMENT IS DESIRED, ADD:										
	AM-1070	AUDITORIUM AMP. KIT	–	–	–	–	–	1	1	1
	AM-1071	" " "	1	1	1	1	1	–	–	–

*SOLD ONLY WITH COMPLETE SOUND SYSTEM

6/23/55

August 23, 1955
Issue #1

Issued by
Engineering Department
Printed in U.S.A.

SIMPLEX XL MAGNETIC STEREOPHONIC/OPTICAL SOUND KITS

AM-1070 AMPLIFIER KIT

1 - AM-1026	Power Amplifier
1 - AM-1034	System Cabinet (Single Place)
1 - AM-1037	Cabinet Kit
1 - P-2076	Resistor

AM-1071 AMPLIFIER KIT

1 - AM-1027	Power Amplifier
1 - AM-1034	System Cabinet (Single Place)
1 - AM-1037	Cabinet Kit
1 - P-2076	Resistor

AM-1091 XL500 4TH CHANNEL KIT

1 - AM-1064	Control Unit
1 - AM-1065	Pre-Amplifier
1 - P-3257	Transformer

AM-1092 XL500 OPTICAL CONVERSION KIT

1 - AM-1034	System Cabinet (Single Place)
1 - AM-1050	Cabinet Kit
1 - AM-1081	Monitor Control Panel
1 - G-2474	Network Box

AM-1093 XL500 NEW THEATRE EQUIPMENT KIT

1 - AM-1034	System Cabinet (Single Place)
2 - SH-1007	Sound Head Assembly (60 Cycle)
or	
2 - SH-1008	" " " (50 Cycle)
2 - SH-1009	Motor Assembly (60 Cycle)
or	
2 - SH-1010	" " (50 Cycle)
1 - SH-1011	Sound head Accessory Kit
1 - PU-1009	Power Unit (60 Cycle)
or	
1 - PU-1010	" " (50 Cycle)
1 - AM-1050	Cabinet Kit

Issued by
Engineering Department
Printed in U. S. A.

August 23, 1955
Issue #1

SECTION I

PRE-INSTALLATION RECOMMENDATIONS

A. GENERAL

1. The customer should become thoroughly familiar with the conduit layout and wiring diagram included at the end of this section. The appropriate Stage Speaker Equipment layout and wiring diagram should be selected from the several available combinations of high and low frequency speakers included in this section. These illustrations not only list the dimensions and weight of the various components, but show the size of the interconnecting conduit and the size and type of wire. They are a valuable aid in planning for the efficient installation of the system.

2. He is urged to conform to these recommendations before arrangements are made for the installation of the Sound System.

3. He should contract for the necessary labor and material required for the complete installation of the entire Sound System far enough in advance of the arrival of the Installation Inspector so that there will be no delays in completing the work.

4. These recommendations are based on the regulations of the National Board of Fire Underwriters and it is the duty of the Customer to insist that all work performed by the electrical contractor shall be in accordance with these regulations.

5. Sometimes special conditions may necessitate deviation from these instructions. In such cases, it is recommended that the nearest Branch Office of National Theatre Supply be advised before any work progresses.

6. Close adherence to all national and local codes and regulations and complete cooperation with the Installation Inspector will result in the most satisfactory installation at a minimum of expense and time.

B. SPACE REQUIREMENTS

1. Projection Room.

   a. The Magnetic Soundhead, which is mounted above the projector mechanism, raises the upper magazine 4-1/2 inches. There must be sufficient head room for this increase in height.

   b. The System Cabinet requires a wall mounting space 44-1/4" high, 21" wide and 14" deep. There should be at least 6" clearance on all sides and not less than two feet in front for inspection and servicing.

Issued by
Engineering Department
Printed in U. S. A.

June 30, 1954
Issue #1

The bottom of the cabinet should not be less than 6" from the floor.

c. The Pre-Amplifier Cabinet, which provides for the mounting of four pre-amplifiers, requires a space 13-3/8" high, 12-3/4" wide and 7-1/4" deep. Wherever possible, it should be mounted on the front wall between machines. In some instances, it may be necessary to build offset mounting brackets that will provide clearance for obstructions on the front wall. It should not be less than three feet from the projector drive motors, the projector changeover or the Pre-Amplifier Power Supply Cabinet to prevent the possibility of hum pickup. The clearance on all sides should not be less than 3" and not less than two feet in front for servicing and inspection.

d. The Four-Channel Changeover Cabinet, requiring a wall mounting space of 6-1/2" high, 6" wide and 5-3/4" deep, should be mounted on the front wall in a convenient operating position at each projector.

e. The Balance and Warping Cabinet, requiring a wall mounting space 12" high x 10" wide x 6" deep, should be mounted on the front wall between machines. Since the system volume control is in this cabinet, it should be conveniently located from an operating standpoint.

f. The System Selector Box, requiring a wall mounting space of 6" high, 8" wide and 4" deep, should also be mounted on the front wall, preferably between the two machines in a two-projector installation. If however, front wall conditions prohibit such a location, it may be mounted adjacent to the system cabinet, referred to in paragraph "b" above.

g. The Pre-Amplifier Power Supply, requiring a wall mounting space of 16" high, 21" wide and 8-3/4" deep, may be located in any convenient position in the Projection Room, not less than three feet from the Pre-Amplifier Cabinet, although the conduit runs required, should be considered in this location.

2. Auditorium.

   a. Select locations for the Auditorium Speakers on the walls around the seating area (including the balcony, if any) to obtain complete coverage of the seating area. Approximately 60° vertical and horizontal coverage may be assumed for each speaker.

   b. The conduit run from the Projection Room to the Speakers should be planned. A 1/2" conduit is required between speakers and from the most convenient speaker to the Projection Room.

3. Stage.

   a. Three identical stage speaker equipments are mounted behind the screen, one located at the center and the other two at two-thirds of the distance from the center to either edge of the screen.

      NOTE: Each stage speaker equipment should cover the entire seating area. It may be necessary, therefore, in some instances, to move the left and right equipments and angle them to obtain full coverage.

   b. The overall size of one of each of the various stage speaker equipments available supplied is tabulated below, Space should be provided for the three equipments and also not less than 18" behind the Low Frequency Horn for servicing.

System	No. HF Units	No. LF Units	Overall Dimensions - Inches			
			Height	Width	Depth	Fig. No.
XL232-38 XL233-39	1	1	67	50	23	2A
XL232-39 XL233-39	1	1	72	48	26	2B
XL232-311 XL233-311	1	1	65	77	35	2C
XL232-312 XL233-312 XL236-312	1	2	65	77	35	2D
XL232-322 XL233-322 XL236-322	2	2	73	77	35	2E
XL236-324	2	4	115	77	35	2F
XL2312-346	4	6	161	77	38	2G

Issued by
Engineering Department
Printed in U. S. A.

June 30, 1954
Issue #1

C. POWER REQUIREMENTS

1. A power supply of 105-125 volts AC, 50-60 cycles ±3% is required for this equipment, the maximum power consumption being 500 watts.

   NOTE: If the power supply is other than that specified, special equipment is required, unless the Power Company will cooperate to provide a power supply within the above limits.

D. MATERIAL SUPPLIED BY THE CUSTOMER

1. The Customer furnishes all electrical conduit and wiring and associated material required for the installation of this system.

   NOTE: Before ordering such material, the appropriate drawings should be studied carefully, the location of the equipment determined and the conduit runs planned.

2. Conduits are recommended so that wires may be pulled through readily.

3. The following list of material isgiven as an indication of the various items required to complete the installation satisfactorily.

   NOTE: Since the amount of the material will vary, this list is typical only.

Quantity	
As required	Conduit, 1/2", 3/4" and 1" rigid
Approximately 5 feet	Conduit, 1" flexible
As required	Condulets and outlet boxes, 1/2", 3/4" and 1".
4	Connectors, 1" flexible conduit
As required	Wire, No. 14 BRC, black and white
As required	Microphone cable, Belden #8422*
As required	Locknuts, bushings, 1/4" toggle bolts, expansion bolts or through bolts, shields, straps, etc.for equipment mounting.

*May be obtained from National Theatre Supply.

SECTION II

INSTALLATION OF EQUIPMENT

A. GENERAL

The Single Film Stereophonic Sound Systems should be installed in accordance with the instructions below. Figures 1 and 2 show typical arrangements to provide maximum ease of operation and servicing. In some instances, however, close adherence to the layouts shown may be impractical. In such cases, it is recommended that either National Theatre Supply or the Installation Inspector be consulted before any work progresses. In any case, the various system components should not be mounted closer to each other than the minimum dimensions shown.

B. UNPACKING

1. Unpack the equipment only as required during installation, to avoid possible damage and the introduction of foreign material that may affect operation.

2. Inspect carefully during unpacking and remove any foreign material at once.

C. EQUIPMENT MOUNTING

1. Fasten all wall mounting equipment, outlet boxes, conduits and condulets to brick or concrete walls with bolts and expansion shields, to tile walls with toggle bolts and to gypsum blocks or transite walls with through bolts.

D. CONDUIT AND WIRING

1. Conduit sizes and wire sizes should be as specified on the appropriate associated drawings.

2. Conduit runs should be as short as possible.

3. Connections should be made in accordance with the associated drawings.

   NOTE: The AC power supply wires may, if desired, be fastened under the terminal screws, using the P-2942 Cup Washers supplied with the cabinet kit.

4. Splices are to be made only as specified.

5. Shielded cable connections in the magnetic soundhead and pre-amplifier cabinet, should be made with the minimum of unshielded conductors exposed and these unshielded conductors twisted as close to the terminals as possible.

   CAUTION: Unless this method of connection is followed carefully, noise and hum may be introduced into the system.

Issued by
Engineering Department
Printed in U. S. A.
June 30, 1954
Issue #1

E. AMPLIFIER EQUIPMENT

1. Mount the system cabinet in the location selected so that it is convenient for inspection and servicing and the controls are readily accessible and visible from the operating position at the projectors.

   NOTE: The speaker switch kit is installed first, the cabinet kit second, followed by the control panel and amplifiers.

2. Install the speaker switch kit in the bottom section of the cabinet as follows:

   a. Fasten the mounting plate to the upper four studs on the rear of the cabinet with the cable form at the left, using the screws supplied.

   b. Fasten the terminal strip to the lower four studs on the rear of the cabinet, using the screws supplied.

   c. Make all connections to the terminal strip per the system wiring diagram.

   d. Connect to and strap the transformer primary, in accordance with the following table, to match the output impedance of the amplifier driving the Auditorium Speakers.

Primary			Secondary			
Impedance Ohms	Connect to	Strap	Impedance Ohms	Connect to	Strap	Power in 70 Volt Line-Watts
16	7 and 12	9 to 10	625	1 and 6	3 to 4	8
12	7 and 11	9 to 10	470	1 and 5	3 to 4	11
8	8 and 11	9 to 10	312	2 and 5	3 to 4	16
4	7 and 12	7 to 10	156	1 and 6	1 to 4	32
		9 to 12			3 to 6	
2	8 and 11	8 to 10	78	2 and 5	2 to 4	64
		9 to 11			3 to 5	

   e. Initially, connect to and strap the transformer secondary, per the above table, so that the power available in the 70 volt line to the Auditorium Speakers is the rated power of the Auditorium Speaker Amplifier or for the next higher power if the amplifier rating is in between two powers listed above.

      NOTE: For example, if the rated power of the amplifier is 40 watts, strap and connect for 64 watts.

   f. Determine the normal volume level per paragraph L, 4 below and if necessary revise the connections to the transformer to change the power available.

3. Install the cabinet kit in the system cabinet as follows:

NOTE: The cabinet kit includes the terminal strips properly interconnected and the necessary mounting details.

a. Position the terminal strips, having terminal designations beside the terminals, on the vertical mounting rails, so that the bottom of each is even with the top of the cable clamp.

b. Secure each terminal strip with four H-2724 Screws, P-1146 Lockwashers and two P-2314 Clamping Plates.

c. Make all external connections to the terminal strips per the system wiring diagram.

4. Install each unit in the system cabinet as follows, starting at the bottom.

a. With the cabinet cover off, pull out both chassis slides, depress each locking lever so that it clears the stop screw and release, thereby preventing the slides from returning into the cabinet.

b. Guide the chassis between the slides and position with the rear chassis support screws in the slots in each slide.

NOTE: The rear chassis support screws depress the locking lever so that they clear the stop pins and the chassis may be pushed into the cabinet.

c. Push the chassis and slides in so that the front of the chassis rests on the crossbar of the cabinet, but the pivot mounting holes are still accessible.

d. Line up the pivot screw hole in the slide and chassis, insert a spacing washer between the chassis and slide and line up with the hole.

e. Insert the pivot screw and fasten with the nut..

NOTE: The washer must be positioned so that it is free to turn after the nut is tightened.

f. Insert the cable form in the P-1066 Cable Clamp, (position to clamp the cable form at the lacing) and mount the cable clamp with an H-2723 Screw.

NOTE: Be sure that there is no twist in the cable form that may tend to cause interference with the chassis.

g. Connect the cable form wires from each chassis to its associated terminal strip per the system wiring diagram.

F. AM-211 FOUR-CHANNEL CHANGEOVER CABINET

1. Mount one cabinet on the front wall of the Projection Room adjacent to each Projection Port and in such a location that the Projectionist can make the sound changeover at the operating position at each Projector.

2. The cabinets should be so located that the connecting conduits may be run between them without interference from other equipment that may be mounted on the front wall.

3. Make connections to the terminal strip per the system wiring diagram and form the wires so that they will not contact the changeover switch when the door is closed.

G. AM-212 BALANCE AND WARPING CABINET

1. Mount the cabinet on the front wall so that the system volume control and emergency switch contained therein, are readily accessible.

2. Locate so that the connecting conduits may be run to it without interference from other equipment that may be mounted on the front wall.

3. Make connections to the terminal strip per the system wiring diagram.

4. During the tuning-up procedure described in the Operating Instructions, Section III, paragraph K, adjust the high frequency response and system gain as required.

H. AM-207 SYSTEM SELECTOR BOX

1. Wherever possible, mount on the front wall in a convenient location between machines, bearing in mind that this cabinet is used to select the type of reproduction:- optical or single film magnetic sound.

2. This unit selects either optical or single film stereophonic. During stereophonic operation, the regular sound system power amplifier usually drives the auditorium speakers. For the special condition, involving the use of a separate power amplifier to drive these speakers, refer to paragraph 8 below. The connections and strapping required for use with various types of sound systems are described below.

3. Simplex XL Sound Systems and other systems having these characteristics:-

500 ohm line between the Pre-Amplifier output and the Power Amplifier input:- one side grounded.

Power Amplifier with a nominal input level of -20 db/6 mw.

No DC voltage on the line between the Pre-Amplifier and the Power Amplifier.

a. Make external connections per the appropriate system wiring diagram. No internal strapping changes required.

4. Simplex Four Star Sound Systems and other Systems having these characteristics:-

High impedance line (10,000 to 20,000 ohms) between the Pre-Amplifier output and the Power Amplifier input:- one side grounded.

Power Amplifier with a nominal input level of -20 db/6 mw.

DC voltage on the line between the Pre-Amplifier and the Power Amplifier.

a. Remove the yellow wire between terminals "A" and "E".

b. Strap terminal "A" to terminal "C" and terminal "D" to terminal "E".

c. Connect the regular Pre-Amplifier output to terminals "REG IN 1" and "F" (instead of "REG IN 1" and "REG IN 2" as shown on the system wiring diagram).

d. Make all other connections per the appropriate system wiring diagram.

CAUTION: Connect the ground side of all circuits to terminal "1" of each pair of terminals.

5. Systems having these characteristics.

High impedance line (10,000 to 20,000 ohms) between the Pre-Amplifier output and the Power Amplifier input:- one side grounded.

Power Amplifier with a nominal input level of -20 db/6 mw.

No DC voltage on the line between the Pre-Amplifier and the Power Amplifier.

a. Remove the yellow wire between terminals "A" and "E".

b. Strap terminal "A" to terminal "C" and terminal "D" to terminal "E".

c. Make all external connections per the appropriate system wiring diagram.

CAUTION: Connect the ground side of all circuits to terminal "1" of each pair of terminals.

6. Systems having a power amplifier with a Nominal Input Level of less than -20 db/6mw.

   a. Remove the yellow wire between terminals "A" and "E".

   b. Determine the attenuation required so that normal setting of the volume control in this cabinet will be approximately in mid-position (refer to Section II, paragraph L), select the resistors from the table below and connect.

Attenuation db	R1 & R3 Ohms	R2 Ohms
-10	1,000	750
-20	620	2,400
-30	510	7,500
-40	510	24,000

   Connect R1 to terminals "A" and "B"
   R2 to terminals "A" and "E"
   R3 to terminals "B" and "E"

   c. Make all external connections per the appropriate system wiring diagram.

   CAUTION: Connect the ground side of all circuits to terminal "1" of each pair of terminals.

7. Systems having a Power Amplifier with a Balanced or Ungrounded input.

   NOTE: A 500/500 ohm matching transformer (Peerless Type E-372-Q or equivalent, furnished by customer)is required.

   a. Mount this matching transformer in a suitable box adjacent to the System Selector Box and make the following connections in the System Selector Box.

   b. Remove the yellow wire between terminals "A" and "E".

   c. Remove the strap between terminals "#4 IN 1" and "REG IN 1".

   d. Strap terminal "REG IN 1" to terminal "OUT 1".

   e. Connect one winding of the 500/500 ohm matching transformer to terminals "#4 IN1" and "A" and the other winding to terminals "B" and "E".

   f. Make all other external connections to the terminal strip per the appropriate system wiring diagram.

8. Additional Amplifier to Drive the Auditorium Speakers.

a. The Auditorium Kit (AM-1070 for large theatres, AM-1071 for small theatres or the AM-1073 for medium theatres) provides a separate amplifier to drive the Auditorium Speakers when it is difficult or undesirable to use the regular Power Amplifier for both optical sound reproduction and to drive the Auditorium Speakers. The changes are described below.

b. Remove the yellow wire between terminals "A" and "E".

NOTE: In some installations it may be necessary to remove the strap between terminals "#4-IN-1" and "REG-IN-1" to avoid a system loop ground.

c. Connect a 500 ohm, 1/2 watt resistor between terminals "A" and "B".

d. Install the terminal strip in the AM-1034 System Cabinet and make external connections to this terminal strip and the System Selector Box per Figure 5. Other connections should be made per the appropriate system wiring diagram.

e. Install the amplifier in the cabinet per Section II, paragraph E, 4, and connect the amplifier cable form wires to the terminal strip per Figure 5.

I. AM-1066 PER-AMPLIFIER CABINET

1. Whenever possible, mount the cabinet on the front wall of the Projection Room between Projectors not less than three feet from the projector motors and picture changeovers, and so that it will be convenient for servicing.

2. In some instances, it may be necessary to improvise suitable mounting brackets to clear obstructions.

3. Make connections to the terminal strip per the system wiring diagram and per paragraph D, 5 on page 2-1.

4. Plug an AM-1065 Pre-Amplifier into each of the four multiconductor receptacles in each cabinet. Refer to the Operating Instructions, Section III, c for adjustment procedure.

J. SH-1025 MAGNETIC SOUNDHEAD

1. Remove the upper magazine from the projector mechanism.

NOTE: When the upper magazine is a Simplex XL, remove the pilot light cover plate and unsolder the wire from the toggle switch before removing the magazine.

2. Remove the rear cover from the magnetic soundhead by loosening the two knurled captive screws.

Issued by
Engineering Department
Printed in U. S. A.

June 30, 1954
Issue #1

3. Mount the soundhead on the top of the projector mechanism with the four socket head screw supplied.

   NOTE: When the projector mechanism is other than Simplex XL, an adapter will be necessary and should be installed per the instructions packed with it.

4. Using a straight edge held against the face of the upper feed sprocket of the projector mechanism and extending into the magnetic soundhead, adjust the soundhead so that the straight edge just touches the sprocket in the magnetic soundhead. Also align the bottom edge of the magnetic soundhead with the top edge of the projector mechanism. Tighten the four mounting screws.

5. Fasten the film slot closure plate to the bottom of the soundhead.

6. Slide a flywheel on the lower and upper stabilizer shafts. Position so that the pin on the shaft is in alignment with the keyway in the hub of each flywheel and fasten securely with the screws supplied and replace the rear cover.

7. Modify each upper magazine per paragraph N below and mount on top of the magnetic soundhead with the screws previously removed.

   NOTE: If the mechanism is other than Simplex XL, an adapter will be necessary and should be installed per the instructions shipped with it.

8. Remove the terminal strip cover, make all connections to the terminal strip per the system wiring diagram and per paragraph D, 5. Replace the cover.

9. Refer to the Operating Instructions, Section III, B, 9 for magnetic pickup head adjustments.

K. PU-1012 PRE-AMPLIFIER POWER SUPPLY CABINET

1. Mount the cabinet in the selected location and make connections to the terminal strip in accordance with the system wiring diagram.

2. Mount the PU-1011 Power Supply on the back of the cabinet using the mounting screws provided and connect the cable form terminals to the terminal strip in accordance with the system wiring diagram.

3. Plug an AM-1064 Control Unit into the left receptacle and a PU-1013 Dummy Load into the right receptacle on the rear of the cabinet.

4. Refer to the Operating Instructions, Section III, F for PU-1011 Power Supply adjustments and to Section III, G for adjustment of the AM-1064 Control Unit.

5. The resistors in the PU-1013 Dummy Load should be strapped in accordance with the figure and table below to maintain a constant load on the PU-1011 Power Supply B+ output.

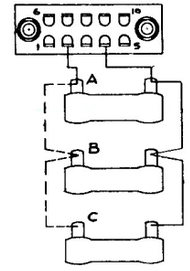

No. of AM-1065 Pre-Amplifiers	No. of AM-1064 Control Units	Strap
6	None	A to B
4	1	A to B
4	None	A to B, B to C
3	None	A to B, B to C

L. AUDITORIUM SPEAKERS

1. Remove the cabinet cover from each cabinet, mount the cabinets in the selected locations, run the connecting conduit and wires.

NOTE: In some instances, it may be necessary to use spacers at the top of the LU-151 Cabinet to tilt it downward to improve distribution.

Issued by
Engineering Department
Printed in U. S. A.

June 30, 1954
Issue #1

2. Fasten the speaker unit behind the grille on the cover and the matching transformer in a convenient location on the cover or in the bottom of the cabinet, using the screws supplied.

3. Connect the primary windings of all matching transformers in parallel across the line from the Speaker Switch Kit.

4. Divide the wattage rating of the power amplifier, driving the speakers, by the number of speakers to obtain the nor- number of watts per speaker.

   NOTE: Normal Auditorium Speaker level should be obtained with the volume control in the System Selector Box in mid-position. If, however, normal volume control setting is near either end, changes in the strapping of the matching transformer secondary in the Speaker Switch Kit (see paragraph E, 2 above) and of the matching transformer primary in each Auditorium Speaker (see table in paragraph 7, b below) should be made so that normal setting is near mid-position. Also, it may be necessary to change the primary strapping of some transformers to reduce the level of individual speakers. The line impedance, referred to in the following paragraph, should then be determined by the parallel resistance method.

5. The line impedance from the Speaker Switch Kit will usually be the primary impedance of the Auditorium Speaker transformer, as strapped, divided by the number of transformers, which determines the strapping of the matching transformer in the Speaker Switch Kit.

6. For example, if the power amplifier driving the speakers is rated at 40 watts, and there are 10 speakers, the power available for each speaker will be four watts. The primary winding of each matching transformer should then be strapped initially for 1,250 ohms. The matching transformer secondary in the LU-1122 Speaker Switch Kit should be strapped initially for 78 ohms, that is, for the next higher power rating.

7. LU-150 Matching Transformer Strapping.

   a. Secondary - Strap terminals 9 and 10 and connect terminals 8 and 11 (8 ohms impedance) to the voice coil terminals of the speaker.

   b. Primary - Strap and connect per the following table.

Primary Impedance	Connect To	Strap	Power From 70 Volt Line
10,000 ohms	1 - 6	3 to 4	1/2 Watt
7,500 ohms	1 - 5	3 to 4	2/3 Watt
5,000 ohms	2 - 5	3 to 4	1 Watt
2,500 ohms	1 - 6	1 to 4 & 3 to 6	2 Watts
1,250 ohms	2 - 5	2 to 4 & 3 to 5	4 Watts

8. LU-151 Matching Transformer Strapping.

   a. Secondary - Connect terminals S1 and S2 (8 ohms impedance) to the voice coil terminals of the speaker.

   b. Primary - Strap and connect per the table in the preceding paragraph 7, b.

9. Fasten the cover to each cabinet when all connections have been made.

M. STAGE SPEAKER EQUIPMENT

1. Three identical two-way loudspeaker equipments, including networks, are to be located on the stage directly behind the screen.

   NOTE: The stage must be level and rigid and support the weight of the speaker equipment.

2. One of these equipments is centrally located behind the screen, the other two to the left and right of center, approximately two-thirds of the distance from the center to the edge of the screen.

   NOTE: The location of the left and right equipments may have to be adjusted in some installations to obtain complete coverage of the seating area and so that drapes, etc. will not interfere.

3. Assemble each low frequency horn component per the appropriate layout, fastening them together with the bolts supplied.

   NOTE: The final position of each low frequency horn assembly, after tuning up is completed (see Operating Instructions, Section III) should be such that the high frequency horn is as close to the screen as is practicable.

4. Set a horn sled on top of each low frequency horn assembly (Figures 2A and 2C to 2G inclusive) and mount the high frequency horn. In Figure 2B, fasten the high frequency horn bracket to the top of the low frequency horn. Two mounting holes are drilled in the top of the low frequency horn.

Issued by
Engineering Department
Printed in U. S. A.

June 30, 1954
Issue #1

NOTE: Hole locations are spotted on the horn sled (Figures 2A and 2C to 2G inclusive) for the various types of high frequency horns to aid in properly positioning the brackets and tilting arm, furnished to secure the horn to the sled.

5. Fasten the horn throat and high frequency unit(s) to the horn (Figures 2A and 2C to 2G inclusive), making sure that the throat and speaker(s) are in alignment before the stud nuts are tightened. In Figure 2B, the horn throat is part of the horn and the high frequency unit threads into the horn.

6. Initially, set the front edge of the leading cell of the high frequency horn 2" in front of the low frequency horn (Figures 2C to 2G inclusive) or 1" in front (Figure 2A) and tilt for proper distribution. In Figure 2B the high frequency horn is fastened to the top of the low frequency horn, using holes provided, and its position is fixed.

7. Remove the rear cover of the low frequency horn(s) and mount the low frequency speaker unit(s).

8. Mount a network on each of the three sets of low frequency horns in a convenient accessible location.

9. Make all connections per the appropriate speaker wiring diagram (Figures4A to 4G inclusive) and replace the cover on all low frequency horns.

N. UPPER AND LOWER MAGAZINE MODIFICATIONS - Refer to Equipment Bulletin, Paragraph M, Pages 10-12, XL-432 & XL-436 Systems, file 40.385.

O. XL OR FOUR STAR SOUND MECHANISM MODIFICATION - Refer to Equipment Bulletin, Paragraph N, Pages 12-13, XL-432 & XL-436 Systems, file 40.385

P. XL PROJECTOR MECHANISM MODIFICATION - Refer to Equipment Bulletin, Paragraph O, Pages 13-18, XL-432 & XL-436 Systems, file 40.385.

I-7753

DRAWN 2-16-54
MARK 3-1 3-15-54

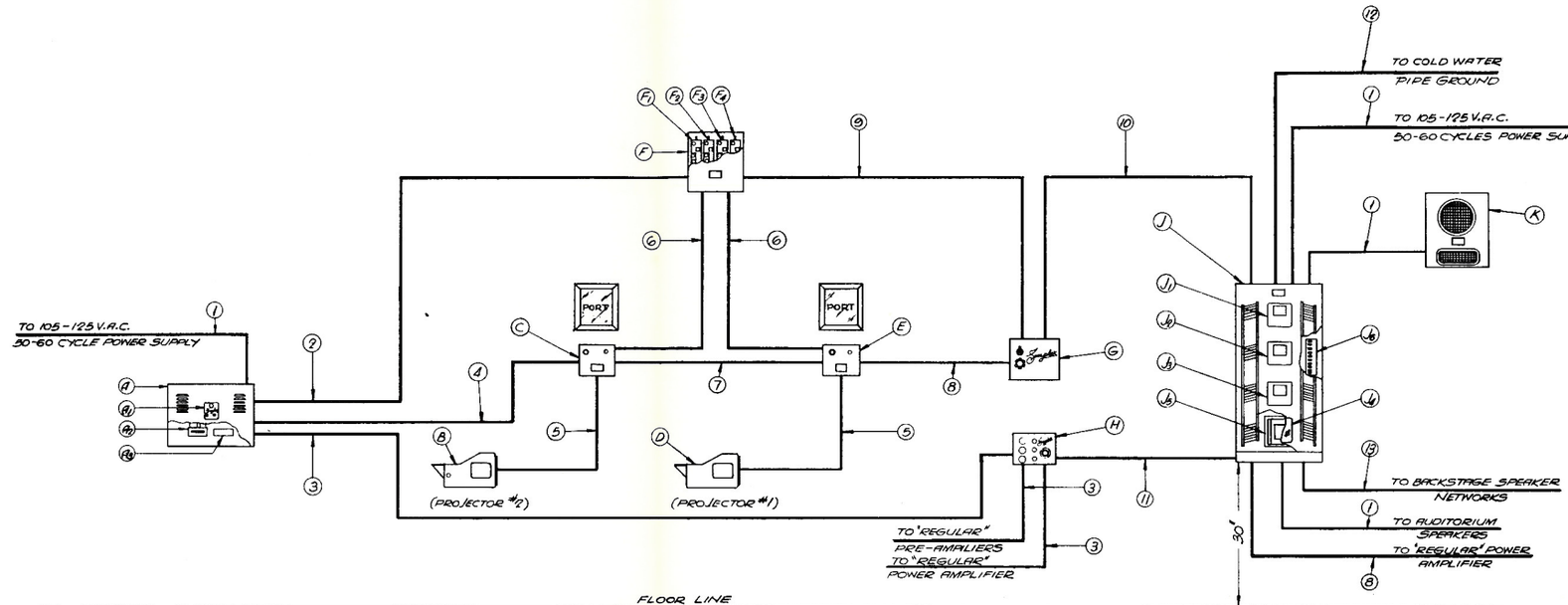

EQUIPMENT

(A) PU-1019 POWER SUPPLY CABINET (18"H. x 21"W. x 8 9/16"D) (38 LBS COMPLETE) INSTALL THE FOLLOWING:—
- (A1) PU-1011 PRE-AMPLIFIER POWER SUPPLY
- (A2) AM-1084 CONTROL UNIT
- (A3) PU-1013 DUMMY LOAD

(B)(D) SH-1025 MAGNETIC SOUNDHEAD (12"L. x 10"W. x 6 1/2"H.) (20 LBS.)

(C)(E) AM-211 FOUR CHANNEL CHANGEOVER CABINET (6 1/2"H. x 6"W. x 5 3/4"D.) (5 LBS.)

(F) AM-1066 PRE-AMPLIFIER CABINET (13 1/4"H. x 15"W. x 8 1/4"D.) (17 LBS. COMPLETE) INSTALL THE FOLLOWING:—
- (F1) AM-1065 PRE-AMPLIFIER
- (F2) AM-1065 PRE-AMPLIFIER
- (F3) AM-1065 PRE-AMPLIFIER
- (F4) AM-1065 PRE-AMPLIFIER

(G) AM-212 BALANCE & WARPING CABINET (12"L. x 10"W. x 6"D.) (13 LBS.)

(H) AM-207 SYSTEM SELECTOR BOX (6"H. 8"W. x 4"D.) (7 LBS.)

(J) AM-1031 FOUR PLACE SYSTEM CABINET (44 1/4"H. x 21"W. x 15 3/4"D) (265 LBS. COMPLETE) INSTALL THE FOLLOWING:—
- (J1) AM-1026, AM-1027 OR AM-1080 POWER AMPLIFIER
- (J2) AM-1026, AM-1027 OR AM-1080 POWER AMPLIFIER
- (J3) AM-1026, AM-1027 OR AM-1080 POWER AMPLIFIER
- (J4) AM-1054 MONITOR AMPLIFIER & CONTROL PANEL
- (J5) LU-1122 SPEAKER SWITCH KIT
- (J6) AM-1055 SYSTEM CABINET KIT

(K) LU-142 MONITOR SPEAKER (18"H. x 15"W. x 8"D.) (19 LBS.)

NOTE:— LOCATION FOR AM-1066 CABINET MIN. DISTANCE 3 FEET FROM MOTORS & PU-1012 CABINET.

CONDUIT AND WIRING

(1) 1/2" CONDUIT	2 - Nº 14 BRC	
(2) 3/4" CONDUIT	5 - Nº 14 BRC 1 - SHIELDED CABLE *	
(3) 1/2" CONDUIT	1 - SHIELDED CABLE *	
(4) 1/2" CONDUIT	3 - Nº 14 BRC	
(5) 1" FLEXIBLE CONDUIT	1 - Nº 14 BRC 4 - SHIELDED CABLE *	
(6) 1" CONDUIT	4 - SHIELDED CABLE * 1 - Nº 14 BRC	
(7) 3/4" CONDUIT	5 - Nº 14 BRC	
(8) 3/4" CONDUIT	4 - Nº - 14 BRC	
(9) 3/4" CONDUIT	3 - SHIELDED CABLE *	
(10) 3/4" CONDUIT	3 - SHIELDED CABLE * 1 - Nº 14 BRC	
(11) 1" CONDUIT	8 - Nº 14 BRC	
(12) 1/2" CONDUIT	1 - Nº 10 BRC	
(13) 3/4" CONDUIT	6 - Nº 14 BRC	

* BELDEN Nº 8122 SHIELDED CABLE

SCALE
CONDUIT LAYOUT
XL-232, XL-233 &
XL-236 STEREOPHONIC
SOUND SYSTEMS
INTERNATIONAL PROJECTOR CORPORATION
96 LA FRANCE AVENUE
BLOOMFIELD NEW JERSEY
DR. MacC CK. RT APP. RT
PRODUCT CLASS F
I-7753

Issued by
Engineering Department
Printed in U.S.A.

FIGURE 1
XL232, XL233, XL236 SERIES
SIMPLEX SINGLE FILM STEREOPHONIC SOUND SYSTEMS
CONDUIT LAYOUT

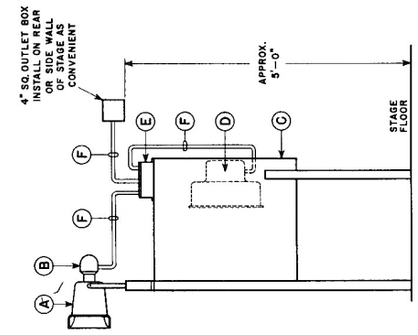

Ⓐ LU-1125 HIGH FREQUENCY HORN (9¾"H x 18½"W x 14½"D) (14 LBS WITH UNIT)
Ⓑ LU-1124 HIGH FREQUENCY UNIT
Ⓒ LU-1127 LOW FREQUENCY HORN (60"H x 48"W x 26"D) (124 LBS WITH UNIT)
Ⓓ LU-1123 LOW FREQUENCY UNIT
Ⓔ LU-1126 NETWORK
Ⓕ NO.16 2-CONDUCTOR TIREX CABLE

FIGURE 2B
STAGE SPEAKER EQUIPMENT LAYOUT
(XL432-36, XL433-39)
1 HIGH FREQUENCY UNIT
1 LOW FREQUENCY UNIT

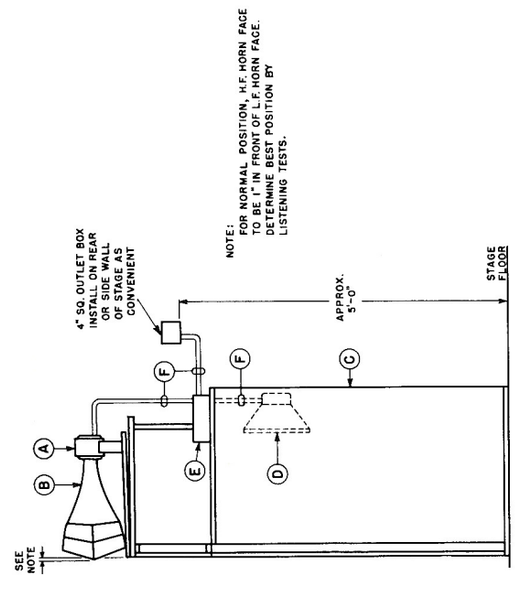

Ⓐ Ⓑ LU-1102 HIGH FREQUENCY UNIT (1)
LU-1099 HIGH FREQUENCY HORN (2 x 4) (9" H x 18" W x 17" D) (17 LBS. WITH UNIT)
Ⓒ LU-1100 LOW FREQUENCY HORN AND WINGS (67"H x 50"W x 24"D, 167 LBS. WITH UNIT)
Ⓓ LU-1101 LOW FREQUENCY UNIT (1)
Ⓔ LU-1098 NETWORK
Ⓕ NO.16 2-CONDUCTOR TIREX CABLE

FIGURE 2A
STAGE SPEAKER EQUIPMENT LAYOUT
(XL232-38, XL233-38)
1 HIGH FREQUENCY UNIT
1 LOW FREQUENCY UNIT

FIGURES 2A AND 2B

ALTEC SERVICE CORPORATION
SIMPLEX
SOUND EQUIPMENT BULLETIN

FIGURE 2D
STAGE SPEAKER EQUIPMENT LAYOUT
(XL232-312, XL233-312, XL236-312)
1 HIGH FREQUENCY UNIT
2 LOW FREQUENCY UNITS

FIGURE 2C
STAGE SPEAKER EQUIPMENT LAYOUT
(XL232-311, XL233-311)
1 HIGH FREQUENCY UNIT
1 LOW FREQUENCY UNIT

FIGURES 2C AND 2D

Issued by
Engineering Department
Printed in U. S. A.

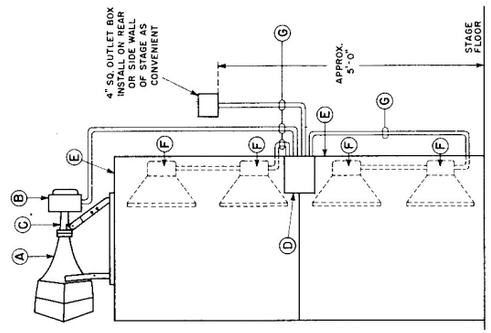

Ⓐ HIGH FREQUENCY HORN
LU-1086 (2×5) OR LU-1087 (3×5)
(25"H×30"W×27"D MAXIMUM)
(132 LBS. WITH 2 UNITS MAXIMUM)

ⒷⒸ LU-1104 HIGH FREQUENCY UNIT (2)

ⒷⒸ LU-2065 HORN THROAT (LU-1086)
LU-2066 HORN THROAT (LU-1087)

ⒹⒺ LU-1121 NETWORK

ⒹⒺ LU-1107 LOW FREQUENCY HORN (2)
(42"H×77"W×35"D EACH)
(550 LBS., ONE HORN WITH 2 UNITS)

Ⓕ LU-1081 LOW FREQUENCY UNIT (4)

ⒻⒼ NO. 16 2-CONDUCTOR CABLE

FIGURE 2F
STAGE SPEAKER EQUIPMENT LAYOUT
(XL236-32+, XL232-324)
2 HIGH FREQUENCY UNITS
4 LOW FREQUENCY UNITS

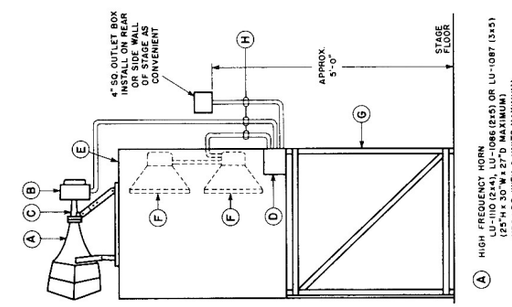

Ⓐ HIGH FREQUENCY HORN
LU-1110 (2×4), LU-1086 (2×5) OR LU-1087 (3×5)
(25"H×30"W×27"D MAXIMUM)
(132 LBS. WITH 2 UNITS MAXIMUM)

ⒷⒸ LU-1104 HIGH FREQUENCY UNIT (2)

ⒷⒸ LU-2065 HORN THROAT (LU-1110, LU-1086)
LU-2066 HORN THROAT (LU-1087)

ⒹⒺ LU-1121 NETWORK

ⒹⒺ LU-1107 LOW FREQUENCY HORN
(42"H×77"W×35"D)
(550 LBS., ONE HORN WITH 2 UNITS)

Ⓕ LU-1081 LOW FREQUENCY UNIT (2)

ⒼⒽ LU-1108 LOW FREQUENCY HORN STAND

ⒼⒽ NO. 16 2-CONDUCTOR TIREX CABLE

FIGURE 2E
STAGE SPEAKER EQUIPMENT LAYOUT
(XL232-322, XL233-322, XL236-322)
2 HIGH FREQUENCY UNITS
2 LOW FREQUENCY UNITS

FIGURES 2E AND 2F

Issued by
Engineering Department
Printed in U. S. A.

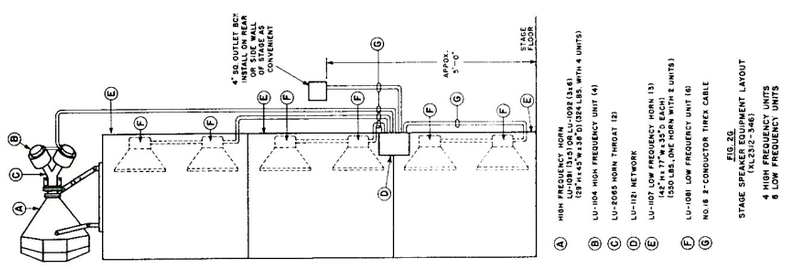

FIG. 2G
STAGE SPEAKER EQUIPMENT LAYOUT
(ALTEC 3-346)
4 HIGH FREQUENCY UNITS
6 LOW FREQUENCY UNITS

FIGURE 2G

Issued by
Engineering Department
Printed in U. S. A.

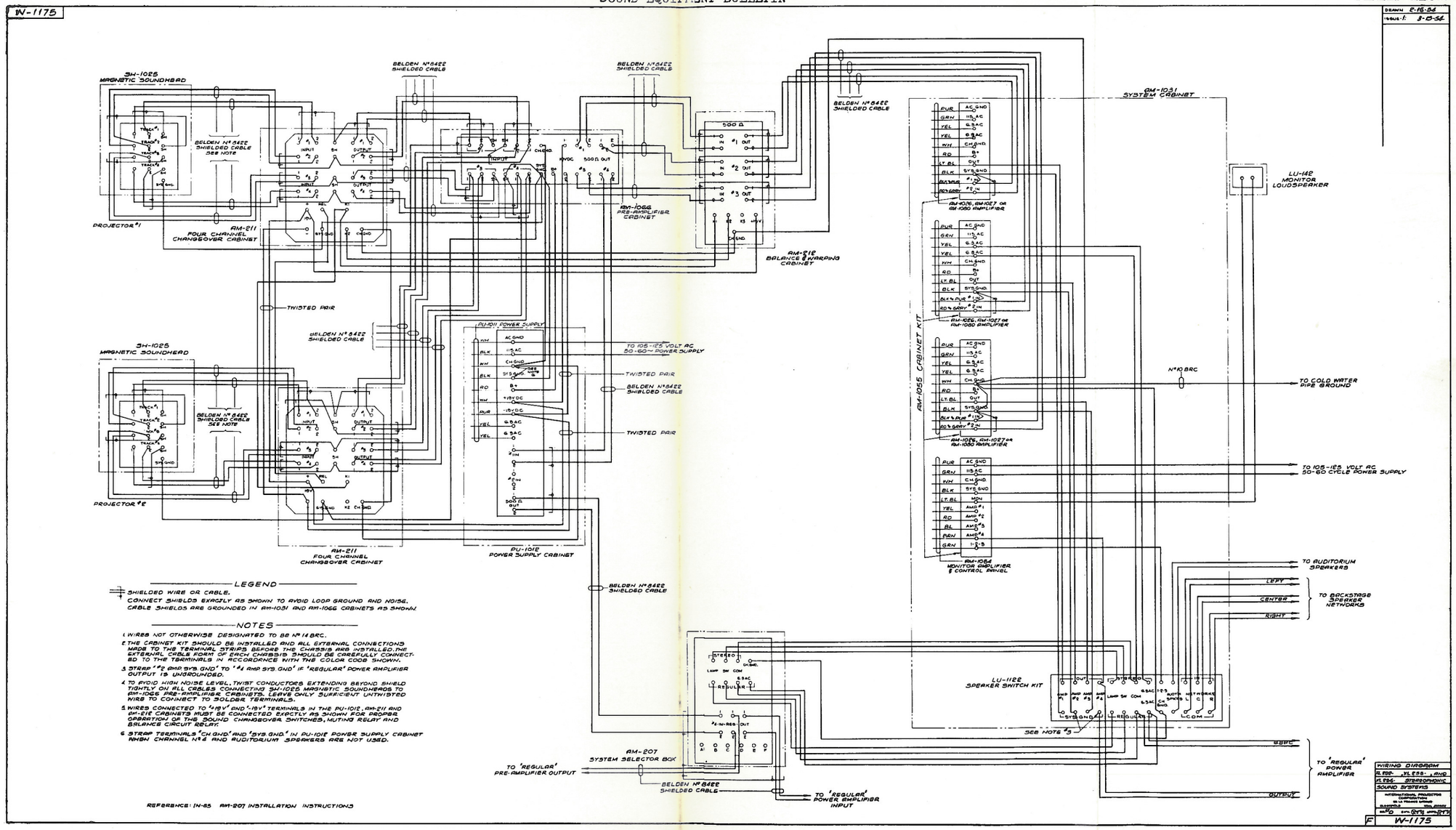

Issued by
Engineering Department
Printed in U.S.A.

FIGURE 3
XL232, XL233, XL236 SERIES
SIMPLEX SINGLE FILM STEREOPHONIC SOUND SYSTEMS
WIRING DIAGRAM

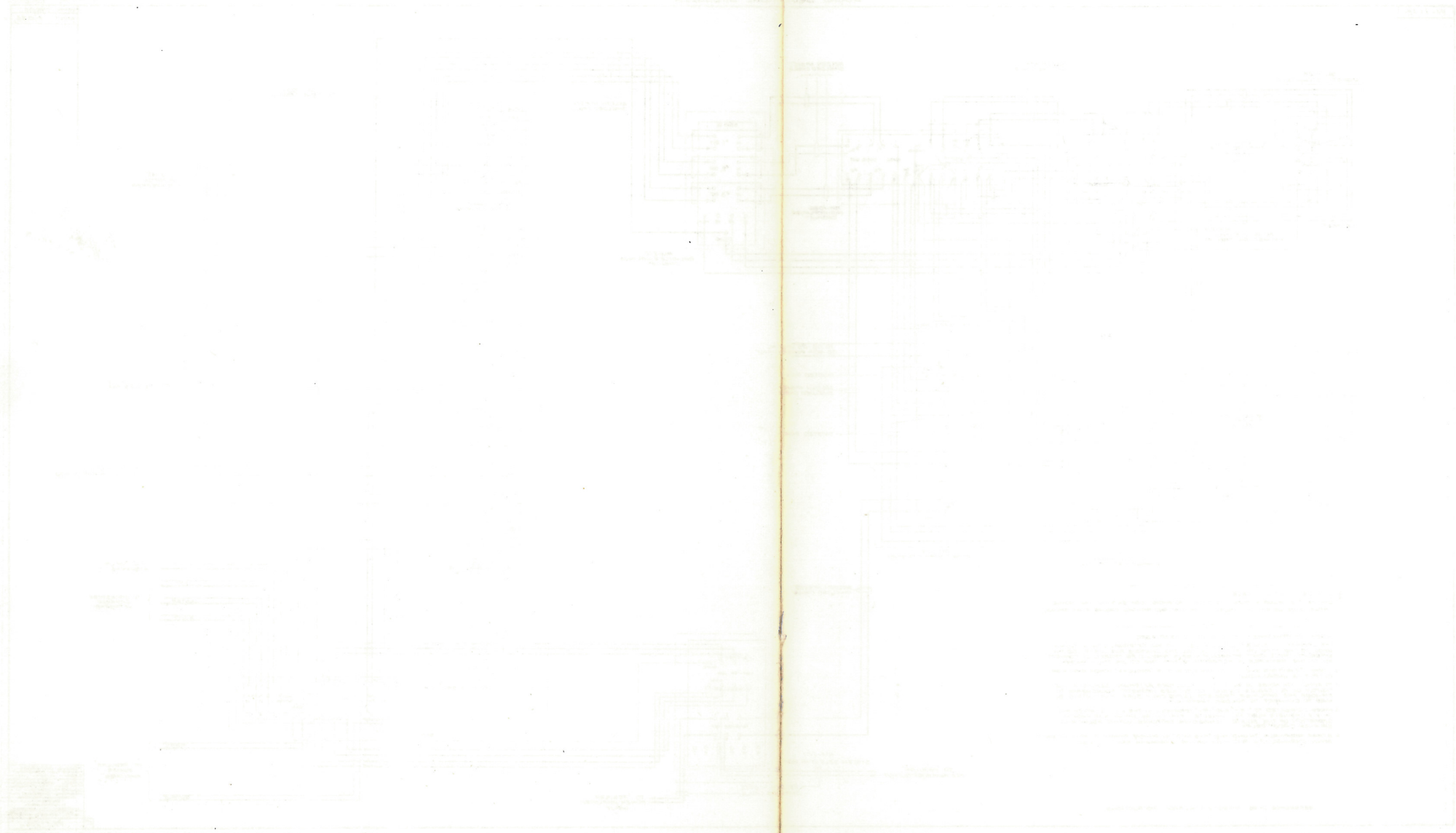

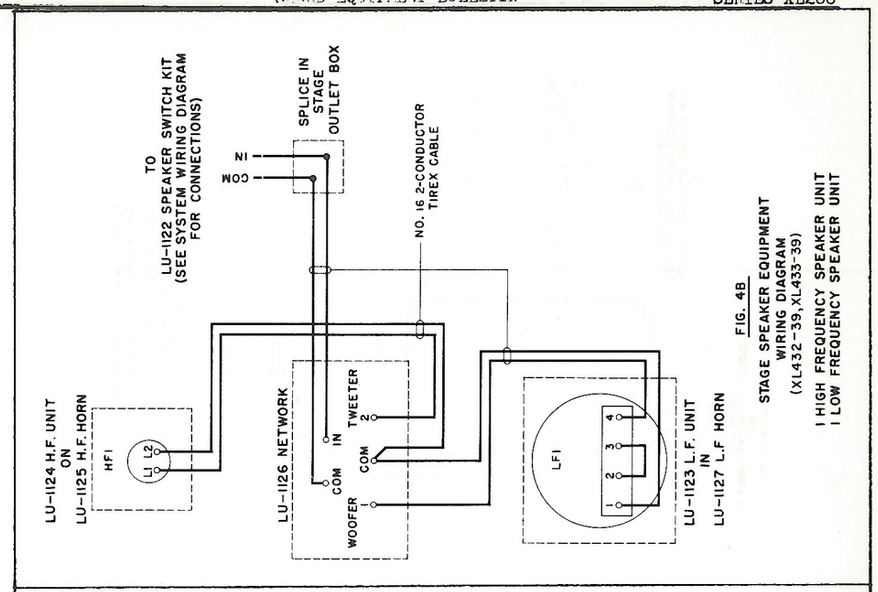

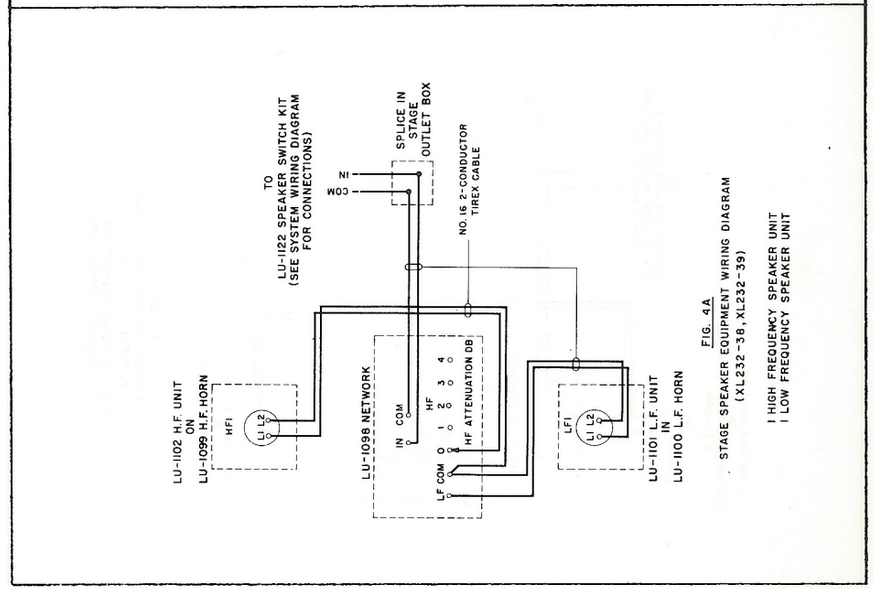

FIGURES 4A AND 4B

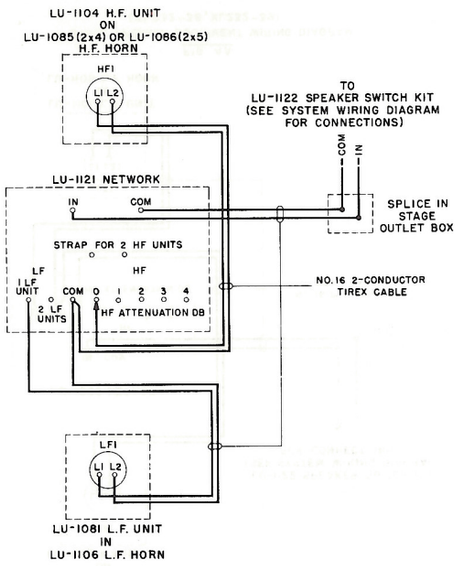

FIG. 4C

STAGE SPEAKER EQUIPMENT WIRING DIAGRAM
(XL232-311, XL233-311)

1 HIGH FREQUENCY SPEAKER UNIT
1 LOW FREQUENCY SPEAKER UNIT

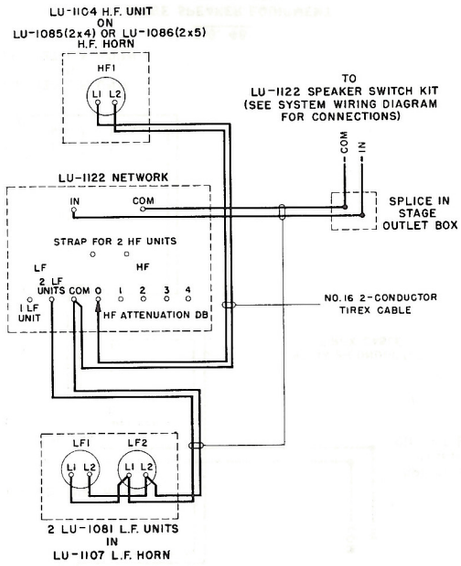

FIG. 4D

STAGE SPEAKER EQUIPMENT WIRING DIAGRAM
(XL232-312, XL233-312, XL236-312)

1 HIGH FREQUENCY SPEAKER UNIT
2 LOW FREQUENCY SPEAKER UNITS

FIGURES 4C AND 4D

Issued by
Engineering Department
Printed in U. S. A.

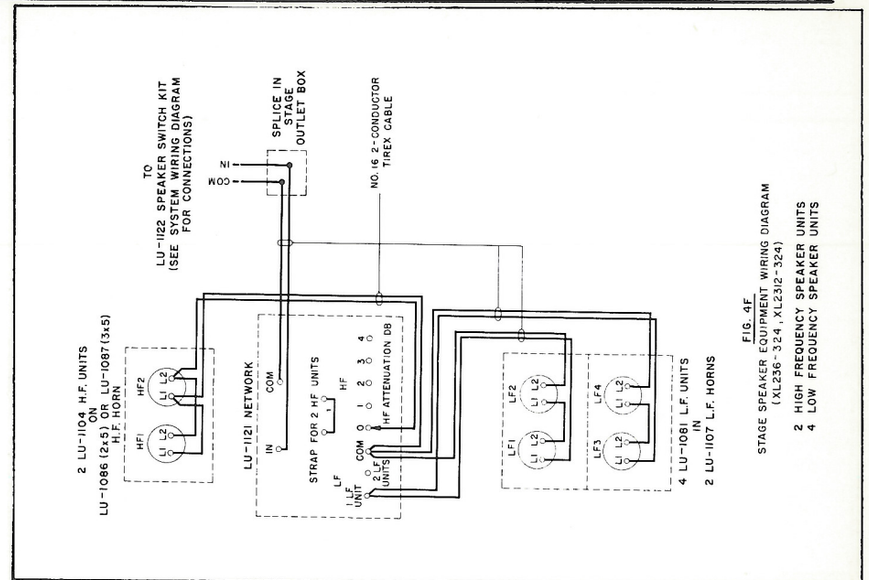

FIG. 4F
STAGE SPEAKER EQUIPMENT WIRING DIAGRAM
(XL236-324, XL2312-324)
2 HIGH FREQUENCY SPEAKER UNITS
4 LOW FREQUENCY SPEAKER UNITS

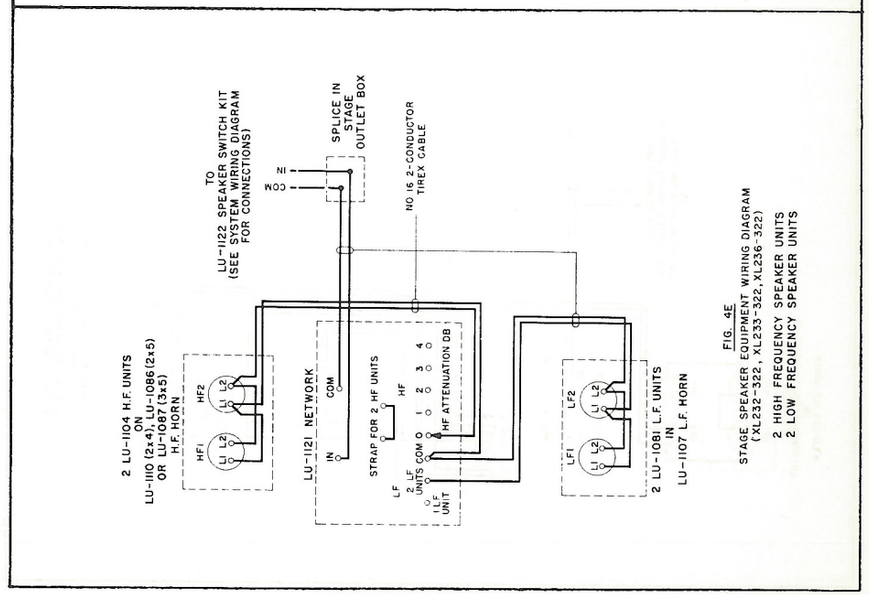

FIG. 4E
STAGE SPEAKER EQUIPMENT WIRING DIAGRAM
(XL232-322, XL233-322, XL236-322)
2 HIGH FREQUENCY SPEAKER UNITS
2 LOW FREQUENCY SPEAKER UNITS

FIGURES 4E AND 4F

ALTEC SERVICE CORPORATION
SIMPLEX
SOUND EQUIPMENT BULLETIN

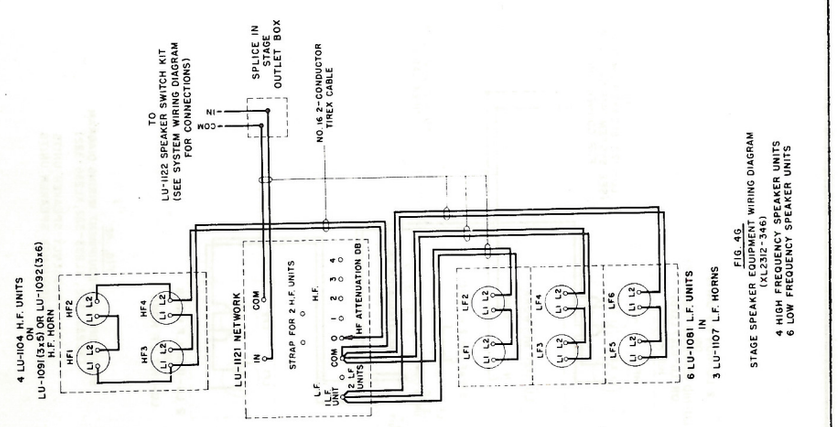

FIG. 4G
STAGE SPEAKER EQUIPMENT WIRING DIAGRAM
(XL2312-346)
4 HIGH FREQUENCY SPEAKER UNITS
6 LOW FREQUENCY SPEAKER UNITS

FIGURE 4G

Issued by
Engineering Department
Printed in U. S. A.

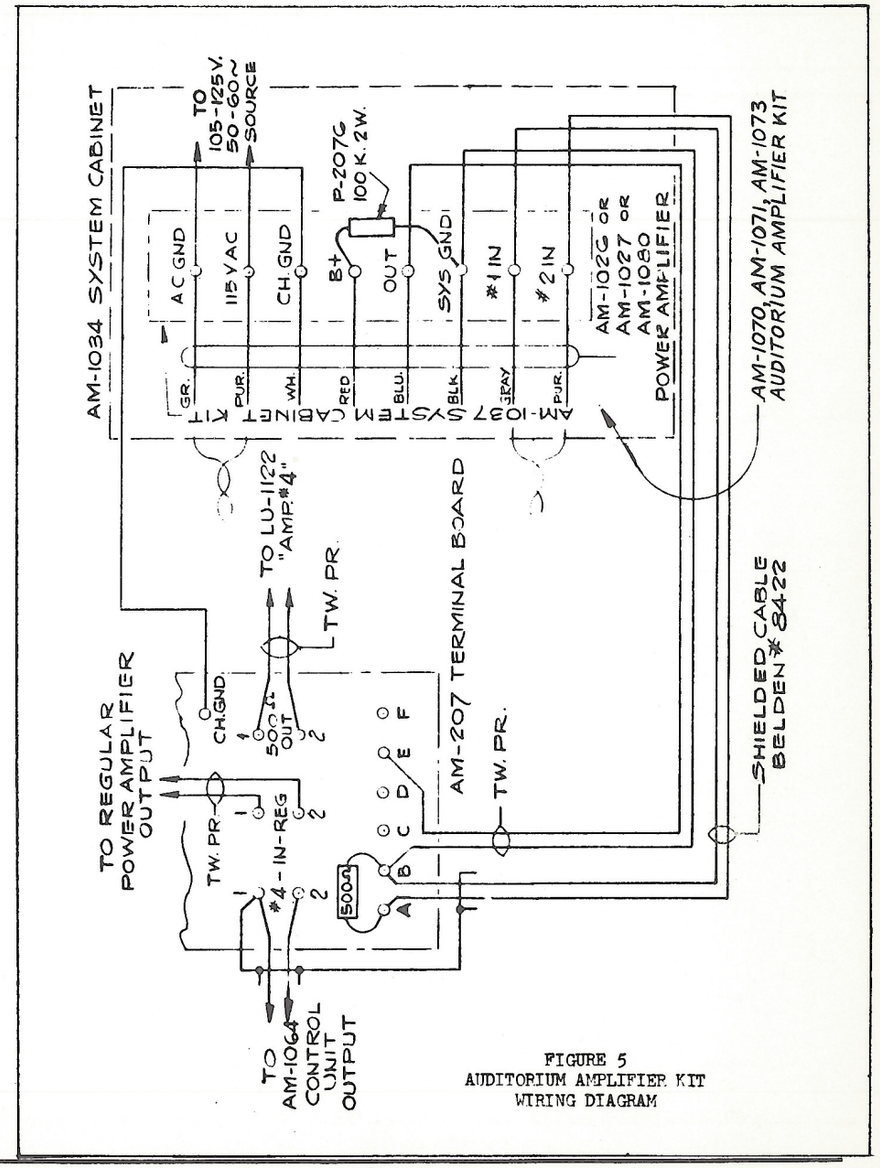

FIGURE 5
AUDITORIUM AMPLIFIER KIT
WIRING DIAGRAM

Issued by
Engineering Department
Printed in U. S. A.

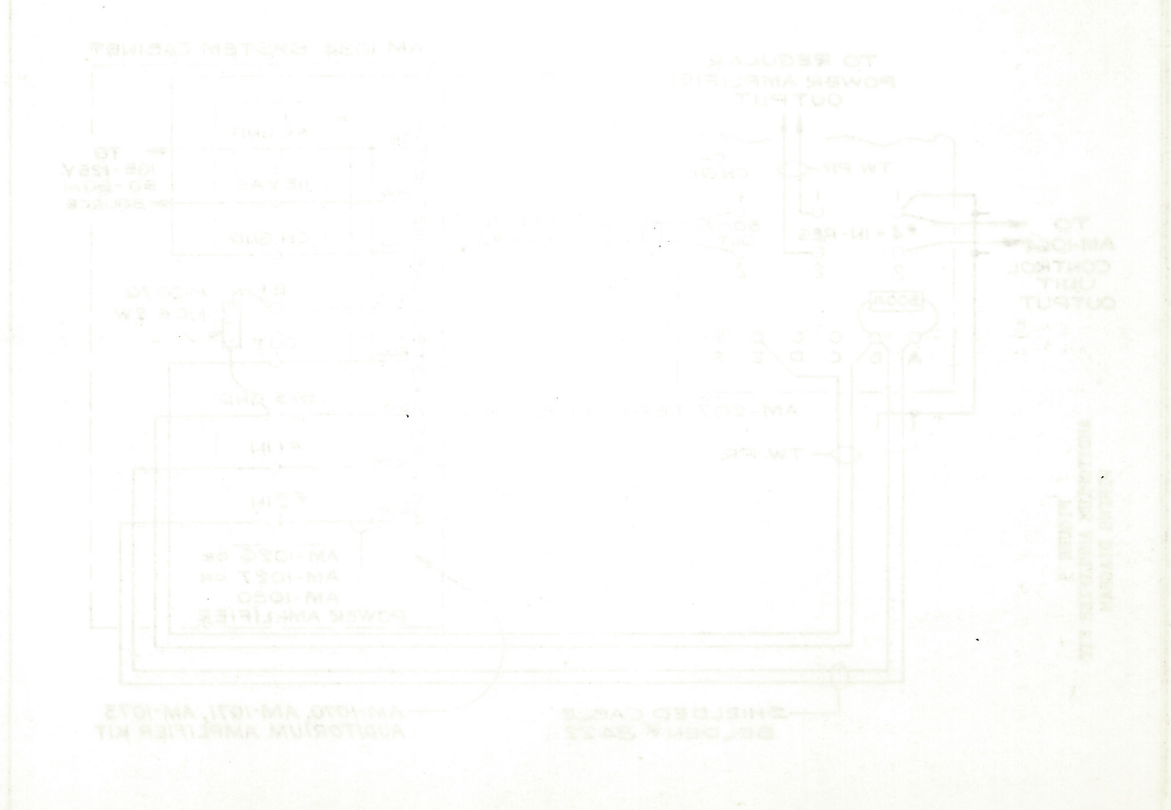

SECTION I

INSTALLATION OF EQUIPMENT

A. GENERAL

The Single Film Stereophonic Sound Systems should be installed in accordance with the instructions below. Figures 1 to 4 inclusive show typical arrangements to provide maximum ease of operation and servicing. In some instances, however, close adherence to the layouts shown may be impractical.

In any case, the various system components should not be mounted closer to each other than the minimum dimensions shown.

B. UNPACKING

1. Unpack the equipment only as required during installation, to avoid possible damage and the introduction of foreign material that may affect operation.

2. Inspect carefully during unpacking and remove any foreign material at once.

C. EQUIPMENT MOUNTING

1. Fasten all wall mounting equipment, outlet boxes, conduits and condulets to brick or concrete walls with bolts and expansion shields, to tile walls with toggle bolts and to gypsum blocks or transite walls with through bolts.

D. CONDUIT AND WIRING

1. Conduit sizes and wire sizes should be as specified on the appropriate associated drawings.

2. Conduit runs should be as short as possible.

3. Connections should be made in accordance with the associated drawings.

   NOTE:- The AC power supply wires may, if desired, be fastened under the terminal screws, using the P-2942 Cup Washers supplied with the cabinet kit.

4. Splices are to be made only as specified.

5. Microphone cable connections in the magnetic soundhead and pre-amplifier cabinet, should be made with the minimum of unshielded conductors exposed and these unshielded conductors twisted as close to the terminals as possible.

   CAUTION:- Unless this method of connection is followed carefully, noise and hum may be introduced into the system.

Issued by
Engineering Department
Printed in U. S. A.

February 1, 1954
Issue #1

E. AMPLIFIER EQUIPMENT

1. Mount the system cabinet in the location selected so that it is convenient for inspection and servicing and the controls are readily accessible and visible from the operating position at the projectors.

   NOTE:- The speaker switch kit is installed first, the cabinet kit second, followed by the control unit and amplifiers.

2. Install the speaker switch kit in the bottom section of the cabinet as follows:-

   a. Fasten the mounting plate to the upper four studs on the rear of the cabinet with the cable form at the left, using the screws supplied.

   b. Fasten the terminal strip to the lower four studs on the rear of the cabinet, using the screws supplied.

   c. Make all connections to the terminal strip per the system wiring diagram.

   d. Strap the Transformer Terminals in accordance with drawing W-1131 in the Operating Instructions, subject to Section II, paragraph K.

3. Install the cabinet kit in the system cabinet as follows:-

   NOTE:- The cabinet kit includes the terminal strips properly interconnected and the necessary mounting details.

   a. Position the terminal strips, having terminal designations beside the terminals, on the vertical mounting rails, so that the bottom of each is even with the top of the cable clamp.

   b. Secure each terminal strip with four H-2724 Screws, P-1146 Lockwashers and two P-2314 Clamping Plates.

   c. Make all external connections to the terminal strips per the system wiring diagram.

4. Install each unit in the system cabinet as follows, starting at the bottom.

   a. With the cabinet cover off, pull out both chassis slides, depress each locking lever so that it clears the stop screw and release, thereby preventing the slides from returning into the cabinet.

   b. Guide the chassis between the slides and position with the rear chassis support screws in the slots in each slide.

NOTE:- The rear chassis support screws depress the locking lever so that they clear the stop pins and the chassis may be pushed into the cabinet.

c. Push the chassis and slides in so that the front of the chassis rests on the crossbar of the cabinet, but the pivot mounting holes are still accessible.

d. Line up the pivot screw hole in the slide and chassis, insert a spacing washer between the chassis and slide and line up with the hole.

e. Insert the pivot screw and fasten with the nut.

NOTE:- The washer must be positioned so that it is free to turn after the nut is tightened.

f. Insert the cable form in the P-1066 Cable Clamp, (position to clamp the cable form at the lacing) and mount the cable clamp with an H-2723 Screw.

NOTE:- Be sure that there is no twist in the cable form that may tend to cause interference with the chassis.

g. Connect the cable form wires from each chassis to its associated terminal strip per the system wiring diagram.

F. TRIPLE CHANGEOVER CABINET

1. Mount one cabinet on the front wall of the Projection Room adjacent to each Projection Port and in such a location that the Projectionist can make the sound changeover at the operating position at each Projector.

2. The cabinets should be so located that the connecting conduit may be run between them without interference from other equipment that may be mounted on the front wall.

3. Make connections to the terminal strip per the system wiring diagram.

G. SYSTEM SELECTOR BOX

1. Wherever possible, mount on the front wall in a convenient location between machines, bearing in mind that this cabinet is used to select the type of reproduction:- optical, single film magnetic sound or dual film magnetic sound.

2. This unit selects any one of three types of sound reproduction:- optical, double film stereophonic or single film stereophonic. For either type of stereophonic operation, the regular sound system power amplifier usually drives the auditorium speakers. For the special condition, involving the use of a separate power amplifier to drive these speakers, refer to paragraph 8 below. The connections and

Issued by
Engineering Department
Printed in U. S. A.
February 1, 1954
Issue #1

strapping required for use with various types of sound systems are described below.

3. Simplex XL Sound Systems and other systems having these characteristics:-

500 ohm line between the Pre-Amplifier output and the Power Amplifier input:- one side grounded.

Power Amplifier with a nominal input level of 0 db/6 mw.

No DC voltage on the line between the Pre-Amplifier and the Power Amplifier.

a. Make external connections per the appropriate system wiring diagram. No internal strapping changes required.

4. Simplex Four Star Sound Systems and other Systems having these characteristics:-

High impedance line (10,000 to 20,000 ohms) between the Pre-Amplifier output and the Power Amplifier input:- one side grounded.

Power Amplifier with a nominal input level of 0 db/6 mw.

DC voltage on the line between the Pre-Amplifier and the Power Amplifier.

a. Remove the yellow wire between terminals "A" and "E".

b. Strap terminal "A" to terminal "C" and terminal "D" to terminal "E".

c. Connect the regular Pre-Amplifier output to terminals "REG IN 1" and "F" (instead of "REG IN 1" and "REG IN 2" as shown on the system wiring diagram).

d. Make all other connections per the appropriate system wiring diagram.

CAUTION:- Connect the ground side of all circuits to terminal "1" of each pair of terminals.

5. Systems having these Characteristics.

High impedance line (10,000 to 20,000 ohms) between the Pre-Amplifier output and the Power Amplifier input:- one side grounded.

Power Amplifier with a nominal input level of 0 db/6 mw.

No DC voltage on the line between the Pre-Amplifier and the Power Amplifier.

a. Remove the yellow wire between terminals "A" and "E".

b. Strap terminal "A" to terminal "C" and terminal "D" to terminal "E".

c. Make all external connections per the appropriate system wiring diagram.

CAUTION:- Connect the ground side of all circuits to terminal "1" of each pair of terminals.

6. Systems having a power amplifier with a Nominal Input Level of -20db or less.

a. Remove the yellow wire between terminals "A" and "E".

b. Determine the attenuation required so that normal setting of the volume control in this cabinet will be approximately in mid-position (refer to Section II, paragraph K), select the resistors from the table below and connect.

Attenuation db	R1 & R3 Ohms	R2 Ohms
-10	1,000	750
-20	620	2,400
-30	510	7,500
-40	510	24,000

Connect R1 to terminals "A" and "B"
R2 to terminals "A" and "E"
R3 to terminals "B" and "E"

c. Make all external connections per the appropriate system wiring diagram.

CAUTION:- Connect the ground side of all circuits to terminal "1" of each pair of terminals.

7. Systems having a Power Amplifier with a Balanced or Ungrounded input.

NOTE:- This connection will result in an insertion loss of approximately 14 db.

a. Remove the yellow wire between terminals "A" and "E".

b. Remove the strap between terminals "#4 IN 1" and "REG IN 1".

c. Strap terminal "A" to terminal "D" and terminal "C" to terminal "E".

d. Connect a 500 ohm, 1/2 watt resistor between terminals "A" and "B".

Issued by
Engineering Department
Printed in U. S. A.

February 1, 1954
Issue #1

e. At T1, remove the strap between terminals #5 and #6 and transfer the purple wire from terminal #5 to terminal #6.

f. Run a wire from T1, terminal #6, to terminal"#4 IN 1".

g. Make all external connections to the terminal strip per the appropriate system wiring diagram.

8. Additional Amplifier to Drive the Auditorium Speakers.

a. The AM-1070 Auditorium Amplifier Kit is used to provide separate amplifier to drive the Auditorium Speaker when it is difficult or undesirable to use the regular Power Amplifier for both optical sound reproduction and to drive the Auditorium Speakers. The changes are described below.

b. Remove the yellow wire between terminals "A" and "E".

c. Connect a 500 ohm, 1/2 watt resistor between terminals "A" and "B".

d. Install the terminal strip in the AM-1034 System Cabinet and make external connections to this terminal strip and the System Selector Box per Figure 5. Other connections should be made per the appropriate system wiring idagram.

e. Install the amplifier in the cabinet per paragraph E, 4, and connect the amplifier cable form wires to the terminal strip per Figure 5.

H. PRE-AMPLIFIER CABINET

1. Wherever possible, mount one cabinet on the front wall of the Projection Room adjacent to each Projector not less than three feet from the projector motors and picture changeovers, and so that it will be convenient for servicing.

2. In some instances, it may be necessary to improvise suitable mounting brackets to clear obstructions.

3. Make connections to the terminal strip per the system wiring diagram.

4. Plug a pre-amplifier into each of the four multi-conductor receptacles in each cabinet.

I. MAGNETIC SOUNDHEAD

1. Remove the upper magazine from the projector mechanism.

NOTE:- When the upper magazine is a Simplex XL, remove the pilot light cover plate and unsolder the wire from the toggle switch before removing the magazine.

2. Fasten the film slot closure plate to the bottom of the soundhead.

3. Remove the rear cover from the magnetic soundhead by loosening the two knurled captive screws.

4. Mount the soundhead on the top of the projector mechanism with the four socket head screws supplied.

   NOTE:- When the projector mechanism is other than Simplex XL, an adapter will be necessary and should be installed per the instructions packed with it.

5. Using a straight edge held against the face of the upper feed sprocket of the projector mechanism and extending into the magnetic soundhead, adjust the soundhead so that the straight edge just touches the sprocket in the magnetic soundhead. Also align the bottom edge of the magnetic soundhead with the top edge of the projector mechanism. Tighten the four mounting Screws.

6. Slide a flywheel on the lower and upper stabilizer shafts. Position so that the pin on the shaft is in alignment with the keyway in the hub of each flywheel and fasten securely with the screws supplied and replace the rear cover.

7. Modify each upper magazine per paragraph M below and mount on top of the magnetic soundhead with the screws previously removed.

   NOTE:- If the upper magazine is a Simplex XL, thread the wire previously removed through the soundhead, resolder to the toggle switch and replace the cover plate. If the magazine is other than Simplex XL, an adapter will be necessary and should be installed per the instructions shipped with it.

8. Remove the terminal strip cover, make all connections to the terminal strip per the system wiring diagram and replace the cover.

J. PRE-AMPLIFIER POWER SUPPLY

1. Mount the cabinet in the selected location and make connections to the terminal strip in accordance with the system wiring diagram.

2. Mount the power supply chassis on the back of the cabinet using the mounting screws provided and connect the cable form terminals to the terminal strip in accordance with the system wiring diagram.

3. Plug the two control units into the receptacles on the rear of the cabinet.

Issued by
Engineering Department
Printed in U. S. A.

February 1, 1954
Issue #1

K. AUDITORIUM SPEAKERS

1. Remove the cabinet cover from each cabinet, mount the cabinets in the selected locations, run the connecting conduit and wires.

   NOTE:- In some instances, it may be necessary to use spacers at the top of the LU-151 Cabinet to tilt it downward to improve distribution.

2. Fasten the speaker unit behind the grille on the cover and the matching transformer in a convenient location on the cover or in the bottom of the cabinet, using the screws supplied.

3. The primary windings of all matching transformers are connected in parallel across the line from the Speaker Switch Kit.

4. The number of watts per speaker will normally be the wattage rating of the power amplifier driving the speakers divided by the number of speakers.

   NOTE:- Normal level should be obtained with the volume control in the System Selector Box in mid-position. If, however, normal volume control setting is near either end, changes in the strapping of the matching transformer primary (see table in paragraph 7b below) should be made so that normal setting is near mid-position. Also, it may be necessary to change the primary strapping of some transformers to reduce the level of individual speakers. The line impedance, referred to in the following paragraph, should then be determined by the parallel resistance method.

5. The line impedance from the Speaker Switch Kit will usually be the primary impedance of the transformer, as strapped, divided by the number of transformers, which determines the strapping of T1 (P-3257 Transformer) in the Speaker Switch Kit (refer to drawing W-1131 in the Operating Instructions).

6. For example, if the power amplifier driving the speakers is rated at 40 watts, and there are 10 speakers, the power available for each speaker will be four watts. The primary winding of each matching transformer should then be straped for 1,250 ohms. The P-3257 Transformer secondary should be strapped for 78 ohms, that is, for the next higher power rating.

7. LU-150 Matching Transformer Strapping.

   a. Secondary - Strap terminals 9 and 10 and connect terminals 8 and 11 (8 ohms impedance) to the voice coil terminals of the speaker.

   b. Primary - Strap and connect per the following table.

Primary Impedance	Connect To	Strap	Power From 70 Volt Line
10,000 Ohms	1 - 6	3 to 4	1/2 Watt
7,500 Ohms	1 - 5	3 to 4	2/3 Watt
5,000 Ohms	2 - 5	3 to 4	1 Watt
2,500 Ohms	1 - 6	1 to 4 & 3 to 6	2 Watts
1,250 Ohms	2 - 5	2 to 4 & 3 to 5	4 Watts

8. LU-151 Matching Transformer Strapping.

   a. Secondary - Connect terminals S1 and S2 (8 ohms impedance) to the voice coil terminals of the speaker.

   b. Primary - Strap and connect per the table in the preceding paragraph 7b.

9. Fasten the cover to each cabinet when all connections have been made.

L. STAGE SPEAKER EQUIPMENT

1. Three identical two-way loudspeaker equipments, including networks, are to be located on the stage directly behind the screen.

   NOTE:- The stage must be level and rigid and support the weight of the speaker equipment.

2. One of these equipments is centrally located behind the screen, the other two to the left and right of center, approximately two-thirds of the distance from the center to the edge of the screen.

   NOTE:- The location of the left and right equipments may have to be adjusted in some installations to obtain complete coverage of the seating area and so that drapes, etc. will not interfere.

3. Assemble each low frequency horn component per the appropriate layout, fastening them together with the bolts supplied.

   NOTE:- The final position of each low frequency horn assembly, after tuning up is completed should be such that the high frequency horn is as close to the screen as is practicable.

4. Set a horn sled on top of each low frequency horn assembly and mount the high frequency horn.

   NOTE:- Hole locations are spotted on the horn sled for the various types of high frequency horns to aid in properly positioning the brackets and tilting arm, furnished to secure the horn to the sled.

Issued by
Engineering Department
Printed in U. S. A.

February 1, 1954
Issue #1

5. Fasten the horn throat and high frequency unit(s) to the horn, making sure that the throat and speaker(s) are in alignment before the stud nuts are tightened.

6. Initially, set the front edge of the leading cell of the high frequency horn. 2" in front of the low frequency horn (1" for Figure 2A) and tilt for proper distribution.

7. Remove the rear cover of the low frequency horn(s) and mount the low frequency speaker unit(s).

8. Mount a network on each of the three sets of low frequency horns in a convenient accessible location.

9. Make all connections per the appropriate speaker wiring diagram and replace the cover on all low frequency horns.

M. UPPER AND LOWER MAGAZINE MODIFICATIONS

1. Non-magnetic rollers are substituted for certain of the magnetic rollers used. The film used in the Single Film System has four magnetic sound tracks, which may be adversely affected, if these tracks contact magnetic materials.

2. Simplex XL 18" Magazines (G-2337 XL Magazine Roller Kit).

   a. Upper Magazine (refer to the XL Projector Mechanism Parts Catalogue, page 3-0).

      (1) Remove the P-1886 Roller Holder Right Cover Fastening Screw and the G-1880 Roller Holder Right Cover.

      (2) Replace two P-1873 Small Rollers with two P-3316 Small Rollers.

      (3) Reassemble, securing the G-1880 Roller Holder Right Cover with the P-1886 Roller Holder Right Cover Fastening Screw.

      (4) On installed magazines, cut off enough of the flanges of G-1880 and G-1881 so that the door of the Magnetic Soundhead closes.

      NOTE:- On new magazines, the portion of the flanges, that must be removed is pinned in place and can be pulled away.

   b. Lower Magazine (refer to the XL Projector Mechanism Parts Catalogue, page 3-2).

      (1) Remove the two P-1887 Roller Holder Fastening Screws and the Roller Holder Assembly from the magazine.

(2) Remove the two P-1557 Roller Holder Right Cover Fastening Screws and the G-1883 Roller Holder Right Cover.

(3) Replace the P-1873 Small Roller and the P-1568 Large Lower Roller with the P-3316 Small Roller and the P-3315 Large Roller respectively.

(4) Reassemble the Roller Holder, fastening the G-1883 Roller Holder Right Cover with the two P-1557 Roller Holder Right Cover Fastening Screws.

(5) Mount the Roller Holder Assembly in the magazine with the two P-1887 Roller Holder Fastening Screws removed under (1) above.

3. Simplex Regular 18" Magazines (G-2336 Regular Magazine Roller Kit).

a. Upper Magazine (refer to the XL Projector Mechanism Parts Catalogue, page 2-7).

(1) On the G-2108 Upper Magazine Adapter, remove the two P-2746 Roller Pivot Screws that mount the two P-2747 Small Rollers and remove the rollers.

(2) Install two P-3317 Small Rollers and secure them with the P-2746 Roller Pivot Screws previously removed.

b. Lower Magazine (refer to the Accessories Parts List, page 8).

(1) Remove six S-485-C Roller Pivot Screws that hold the three R-160-C Small Rollers and remove the rollers.

(2) Install three P-3317 Small Rollers and secure with the six S-485-C Roller Pivot Screws previously removed.

4. Simplex XL 25" Magazines (G-2338 25" Magazine Roller Kit).

a. Upper Magazine (refer to the XL Projector Mechanism Parts Catalogue, page 2-7).

(1) On the G-2108 Upper Magazine Adapter, remove the two P-2746 Roller Pivot Screws that hold the two P-2747 Small Rollers and remove the rollers.

(2) Install two P-3317 Small Rollers using the P-2746 Roller Pivot Screws previously removed.

b. Lower Magazine.

(1) Remove the nine Support Bracket Fastening Screws

Issued by
Engineering Department
Printed in U. S. A.

February 1, 1954
Issue #1

(P-1921) and separate the Support Bracket from the Magazine Case and Cover Assembly.

(2) Loosen the four Roller Holder Fastening Screws (H-2038 and H-2039).

(3) Remove the two Roller Holder Right Cover Fastening Screws (P-1557) and the Roller Holder Right Cover (G-1883).

(4) Replace the small and large Rollers (P-1873 and P-1568) respectively with P-3316 and P-3315 respectively.

(5) Reassemble, securing the roller holder right cover with the two Roller Holder Right Cover Fastening Screws (P-1557) previously removed.

(6) Tighten the four roller holder fastening screws to secure the roller holder assembly to the support bracket.

(7) Mount the magazine case and cover assembly on the support bracket with the nine bracket fastening screws previously removed.

N. XL OR FOUR STAR SOUND MECHANISM MODIFICATION (refer to the XL Sound Mechanism Parts Catalogue, page 5-1 or the Four Star Sound Mechanism Parts List) (G-2334 Sound Mechanism Kit).

1. The sound and holdback sprockets, which conform to the narrower perforations on the film, are substituted and nylon (non-magnetic) pad rollers replace the magnetic pad rollers currently used.

NOTE:- In the following paragraphs, the numbers in parenthesis apply to the Four Star Sound Mechanism.

2. Sprocket Replacement.

a. Remove the two H-1501 (SN-140) Stripper Fastening Screws from each stripper and each P-2211 (SN-125) Stripper Plate.

b. Remove the H-1502 (SN-144) Sound Sprocket Fastening Screw from the sound sprocket and replace the P-2197 (SN-122) Sound Sprocket with the P-3322 Sound Sprocket and secure with the H-1502 (SN-144) Screw previously removed.

c. Remove the H-1502 (SN-144) Holdback Sprocket Fastening screw and the P-2198 (SN-123) Holdback Sprocket and replace with the G-2331 Holdback Sprocket. Secure with the screw previously removed.

d. Mount the P-2211 (SN-125) Stripper Plates previously removed and fasten with the H-1501 (SN-140) Screws.

3. Pad Roller Replacement.

   a. Loosen the three H-2702 (SN-139) Pad Roller Stud Set Screws and remove the three G-1959 (SN-131) Pad Roller Studs and Knobs.

   b. Slide the pad rollers from each of these studs and substitute the P-3085 Nylon Pad Rollers.

      NOTE:- Any washers between the pad rollers and pad roller arms should be replaced in the same position when installing nylon pad rollers.

   c. Slide the pad roller stud and knob into the hole in the pad roller arm and secure with the H-2702 (SN-139) Screw previously loosened.

C. XL PROJECTOR MECHANISM MODIFICATION (G-2333 XL Projector Modification Kit)

1. Upper and lower sprockets, which conform to the narrower perforations on the film, are substituted. Nylon (non-magnetic) pad rollers replace the magnetic pad rollers currently used. Heat shields, to accommodate the increased picture size, are substituted and a support for 4" diameter projection lens is added.

2. For other than 4" diameter projection lenses, the lens support is not required. Spacers and/or adapters, obtainable from the lens manufacturer, provide for the attachment of the Cinemascope lens to the projection lens.

3. Upper and Lower Sprocket Replacement (refer to the XL Projector Mechanism Parts Catalogue, pages 1-18 and 1-28).

   a. Remove one of the P-1432 Stripper Fastening Screws on each sprocket assembly, loosen the other and rotate the stripper to clear the sprocket.

   b. Open the pad rollers.

   c. Remove P-1652 Sprocket Retaining Screw and slide the sprocket from the shaft.

   d. Slide the replacing G-2332 Sprocket on the shaft with the key pin and keyway in alignment and secure with the sprocket fastening screw.

   e. Insert the P-1432 Stripper Fastening Screw and tighten both screws.

4. Upper and Lower Feed Sprocket Pad Roller Replacement (see XL Projector Mechanism Parts Catalogue, pages 1-18 and 1-28).

Issued by
Engineering Department
Printed in U. S. A.

February 1, 1954
Issue #1

a. Open each of the pad rollers.

b. Loosen the P-1557 Stud Roller Set Screw (H-3707 in some mechanisms) in each assembly and remove the pad rollers.

c. Substitute P-3085 Nylon Pad Rollers and reassemble.

NOTE:- Any P-3066 Pad Roller Spacing Washers between the pad rollers and pad roller arms should remain in the same position when the pad rollers are replaced.

d. Position the pad roller arm adjusting screw on the sprocket assembly casting so that with two thicknesses of film between the sprocket and pad rollers, both pad rollers just rotate. Be sure that the adjusting screw locknut is then tightened securely.

5. Intermittent Sprocket Replacement (refer to XL Projector Mechanism Parts Catalogue, page 1-17).

a. Open the film trap door, remove the knurled trap door fastening nut at the top and bottom of the door and the door.

b. Loosen the single captive film trap fastening screw and remove the film trap.

c. Turn the framing knob clockwise (film side) until the P-1190 Stripper Fastening Screw is accessible. Remove the screw and the P-1593 Stripper.

d. Rotate the intermittent so that one of the index lines on the P-1938 Starwheel Shaft Collar is in alignment with the index line on the G-2144 Front Bearing Plate and retain this setting.

e. Remove the P-1601 Intermittent Sprocket Fastening Screw and the P-1602 Nut.

f. Loosen the two P-1971 Collar Set Screws and remove the P-1938 Starwheel Shaft Collar.

g. Remove the two P-1778 Front Bearing Plate Fastening Screws and the G-2144 Front Bearing Plate.

h. Remove the intermittent sprocket and substitute the G-2330 Sprocket.

NOTE:- Make sure that the "Simplex" trademark is direct reading when viewed from the outboard end of the sprocket. This method of assembly is necessary as the contact rings on either side of the sprocket are of different widths. These rings are so dimensioned that a minimum width film will not be less than the overall length of the sprocket, thereby avoiding the wearing of a groove on the inner contact ring.

i. Position the G-2144 Front Bearing Plate with the P-1778 Front Bearing Plate Fastening Screws finger tight.

j. Adjust G-2144, as required so that the bearing is precisely centered with respect to the intermittent shaft and tighten the fastening screws.

k. Fasten the intermittent sprocket to the shaft with the fastening screw and nut.

l. Slide the starwheel shaft collar on the shaft with one of its index lines in alignment with the index line on the front bearing plate.

m. Pull the sprocket forward and at the same time, press the collar inward so that there is just perceptible end play.

n. Tighten the collar fastening screw securely and check for just perceptible end play.

6. Film Trap Heat Shield Replacement (refer to the XL Projector Mechanism Parts Catalogue, page 1-2).

a. Remove the P-1703 Heat Shield Fastening Screws and the G-1908 Heat Shield.

b. Substitute the G-2329 Heat Shield and secure with the P-1703 Fastening Screws.

c. Substitute the G-2323 Aperture Plate for that previously used.

d. Reinstall the film trap and align the intermittent sprocket and film guide edge as follows:-

(1) Place a straight edge along the guide edge of the film trap and extend to the intermittent sprocket.

(2) Loosen the intermittent sprocket fastening screw and slide the sprocket on the shaft as required, until the outboard face of the sprocket is in exact alignment with the straight edge.

(3) Tighten the sprocket fastening screw securely.

7. Film Trap Door Intermittent Sprocket Tension Shoe Replacement (refer to XL Projector Mechanism Parts Catalogue, page 1-4 and page 2-20 of this manual).

a. Remove the P-1676 Tension Shoe Spring Fastening Screw and the tension shoe assembly.

b. Replace with the G-2350 Tension Shoe Assembly, making

sure that the curved portion of the shoe is in the same position as shown on Figure 6, and the P-1676 Screw finger tight.

c. Install the film trap door, close it slowly and adjust the tension shoe assembly until the outboard edge of the shoe and the outboard face of the intermittent sprocket are in exact alignment.

d. Tighten the P-1676 Screw securely.

8. Heat Shield Replacement (refer to XL Projector Mechanism Parts Catalogue, pages 1-14 and 1-28).

a. Loosen the G-1909 Spot Sight Box Fastening Screw, remove the P-1758 Spot Sight Box Fastening Nut and the Spot Sight Box (XL Projector Mechanism Parts Catalogue, page 1-28).

b. Loosen the two dowser pivot clamp set screws and withdraw the flexible shaft from the hole in the dowser pivot.

c. Remove the five P-1557 Rear Cover Fastening Screws and the rear cover.

d. Remove the two P-1527 Rear Heat Shield Fastening Screws and the P-1992 Heat Shield.

e. Substitute the P-3314 Rear Heat Shield and secure with the two P-1527 Screws.

f. Remove the two P-1940 Front Heat Shield Fastening Screws and the P-1982 Heat Shield.

g. Substitute the P-3312 Heat Shield and secure with the P-1940 Screws.

NOTE:- Make certain that the heat shield is installed with the thinner wall toward the non-operating side.

h. Mount the rear cover and fasten with the five P-1557 Screws.

i. Slide the flexible shaft into the hole in the dowser pivot. Position the flexible shaft so that the dowser completely covers the aperture in down position and is completely clear of the aperture in the up position and tighten the two clamping screws.

9. Spot Sight Box Heat Shield Replacement (refer to XL Projector Mechanism Parts Catalogue, page 1-28).

a. Remove the three P-1857 Heat Shield Fastening Screws and the P-1856 Heat Shield.

b. Substitute the P-3313 Heat Shield and fasten with the P-1857 Screws.

c. Reinstall the spot sight box.

10. Lens Holder Modification (refer to XL Projector Mechanism Parts Catalogue, page 1-20 and **Figure 7** of this **bulletin**) (G-2335 Lens Mounting Kit).

NOTE:- Required when a 4" diameter projection lens is used. This modification supports and locates rotationally the 4" Cinemascope lens. A spacer clamp, obtainable from the lens manufacturer, will be required to attach the Cinemascope lens to the projection lens. The spacer clamp will act as a stop ring when 5-1/4 to 5-3/4" projection lenses are used. The regular G-2161 Lens Stop Ring may be used with lenses larger than 5-3/4".

a. Remove the projection lens.

b. Loosen The P-1433 Lens Holder Guide Clearance Adjusting Screw.

c. Remove the two P-1551 Upper Guide Bracket Fastening Screws and the P-2008 Mounting Bracket (including the P-1549 Upper Lens Holder Guide). Discard P-1549 and P-2008 only.

d. Slide the P-3305 Guide Stud into the P-3309 Bracket and fasten with the P-1462 Screw removed under "c" above.

e. Slide the P-3307 Support Rod into the P-3309 Bracket and fasten with P-1462 Screw contained in the modification kit.

f. Fasten the Bracket Assembly to the Projector with the two P-1551 Bracket Fastening Screws removed under "c" above, and with the bracket as high as possible. Be sure that the P-3305 Guide Stud slides into the guide on the top of the P-1550 Lens Holder.

g. Slide the G-2327 Lens Support Ring over the Cinemascope lens to the shoulder and tighten the lock ring fastening screw.

h. Using the spacer clamp provided by the manufacturer, attach the Cinemascope lens to the projector lens to be used.

i. Slide this lens combination into the XL Lens Holder with the G-2327 Lens Support Ring Roller sliding on the P-3307 Support Rod.

j. Loosen the two P-1551 Bracket Fastening Screws and adjust the P-3309 Bracket so that the lens combina-

tion slides in and out of the lens holder as the roller on top of the G-2327 Lens Support Ring is rotated.

NOTE:- It may be necessary to loosen the four P-1551 Lower Lens Holder Bracket Fastening Screws and adjust the positioning of the G-2143 Lower Lens Holder Guide Bracket.

k. After all adjustments are made and all mounting screws tightened, rotate the lens focusing knob and tighten the P-1433 Screw so that there is smooth, uniform travel throughout the range of adjustment without binding or excessive looseness.

SECTION II

ADJUSTMENTS AND REPLACEMENTS

A. GENERAL

The adjustments are rapidly made and the utmost in simplicity of replacements has been attained by quickly removable units and components.

B. FOUR TRACK MAGNETIC SOUND MECHANISM - (Figure 9).

1. Pad Roller Assembly Replacement.

   a. Open the Pad Roller, compress the actuating spring so that the small hole in the forked spring guide is accessible and pass a pin (paper clip is satisfactory) through this hole to relieve the spring tension.

      NOTE:- Before removing the Lower Pad Roller Assembly, remove the Lower Tension Roller Fastening Screw and the Lower Tension Roller.

   b. Remove the Pad Roller Assembly Fastening Screw and the Pad Roller Assembly.

   c. Replace parts as necessary, reassemble, remove the pin and adjust the Pad Roller clearance per the following paragraph.

2. Pad Roller Replacement.

   a. Open the Pad Roller.

   b. Loosen the Pad Roller Stud Set Screw in the Pad Roller Arm Bracket.

   c. Remove the Pad Roller Stud and Pad Roller.

   d. Replace parts as necessary and reassemble.

      NOTE:- Position the Pad Roller Stud so that the Pad Roller rotates freely before tightening the set screw.

e. Adjust the clearance between the Pad Roller and Sprocket, as follows:-

CAUTION:- The Upper and Lower Pad Rollers must be adjusted as described to minimize the possibility of film damage. Under normal operating conditions these pad rollers will not rotate. They should not be adjusted in an attempt to make them rotate.

(1) Thread two thicknesses of film on the sprocket and close the Pad Roller.

(2) Loosen the Pad Roller Arm Adjusting Screw Locknut and position the Pad Roller Arm Adjusting Screw so that the Pad Roller rotates freely.

(3) Tighten the Pad Roller Arm Adjusting Screw Locknut and check the adjustment.

3. Sprocket Replacement.

a. Open the Pad Rollers.

b. Remove the Sprocket Fastening Screw and the sprocket. Be sure that the spring washer and thrust washer behind the sprocket remain on the stud.

c. Replace parts as necessary and reassemble.

4. Upper or Lower Guide Roller Replacement.

a. Remove the Guide Roller Fastening Screw and the Guide Roller. Be sure that the washers behind the Guide Rollers remain on the stud.

b. Replace parts as necessary and reassemble, making sure that the Guide Roller rotates freely.

5. Upper or Lower Tension Roller Replacement.

a. Remove the Roller Fastening Screw and the Roller. Be sure that the washers behind the Tension Rollers remain on the stud.

b. Replace parts as required and reassemble, making sure that the Roller rotates freely.

c. Adjust per the following paragraph if required.

6. Upper and Lower Tension Roller Adjustment.

a. With film running through the soundhead, the center of the Upper and Lower Tension Rollers should be equidistant from the center of the Upper and Lower Stabilizer Drum shafts respectively.

b. Adjust as follows:-

(1) Loosen the Tension Roller Adjustment Locking Screw one quarter turn;

Issued by
Engineering Department
Printed in U. S. A.
February 1, 1954
Issue #1

(2) Rotate the Tension Roller Adjusting Screw until the Tension Rollers are in proper position and tighten the Tension Roller Adjustment Locking Screw.

7. Upper Or Lower Stabilizer Drum Replacement.

a. Remove the Flywheel Fastening Screw, Washer and the Flywheel on the non-operating side.

b. Remove the Pin, Flat Washer, Spring Washer and Thrust Washer from the shaft.

c. Withdraw the Stabilizer Drum and shaft from the operating side carefully in view of the ball bearings at both ends of the shaft.

d. Replace parts, as required, and reassemble.

8. Magnetic Pickup Head Replacement.

a. Remove the Lateral Adjustment Locking Screw and the Lateral Adjusting Knob.

b. Disconnect the Cable Connector from the Magnetic Head and slide the Magnetic Head in its Bracket from the mounting stud.

c. Remove the four Magnetic Head Mounting Screws and the shield and head from the bracket.

d. Replace the head, reassemble and adjust per the following paragraph.

9. Magnetic Pickup Head Adjustment.

NOTE:- Magnetic Soundheads are shipped with the Magnetic Pickup Head precisely adjusted. While the adjustment should be checked at installation, the adjustment procedure below must be followed exactly when a Magnetic Pickup Head is replaced.

a. The outputs of all Pre-Amplifiers must be precisely balanced (for each machine and between machines) by adjustment of the Magnetic Pickup Head and the gain of the Pre-Amplifiers. When it is difficult to obtain a balance on the fourth track of either machine, a balance between machines should be obtained.

b. The following adjustments apply to the Magnetic Pickup Head, but, since the balancing measurements are made at the output of the Pre-Amplifiers, the gain of each Pre-Amplifier effects individual balancing as well as the balance between machines. Accordingly, gain adjustment of each Pre-Amplifier will usually have to be made in conjunction with the adjustment of the Magnetic Pickup Head.

c. These adjustments must be precisely made in the order listed and the procedure in paragraph C below also followed to obtained the final exact balancing required.

d. Visual Preliminary Lateral Adjustment.

(1) Thread a four-track magnetic sound film in the soundhead.

(2) Loosen the Lateral Adjustment Locking Screw and turn the Lateral Adjusting Screw until track #1 on the film and on the magnetic pickup head are in alignment visually.

(3) Tighten the Lateral Adjustment Locking Screw.

e. Pressure Adjustment.

(1) Thread a 1 KC (4-track level balance) test film in the soundhead.

NOTE:- This film loop is threaded in the normal manner except that it is routed over (instead of under) the Upper Guide Roller and around the Upper Feed Sprocket in the Projector Mechanism.

(2) Turn the motor manually, check the running of the film and turn the motor switch ON.

(3) Loosen the Pressure Adjustment Locking Screw approximately one-half turn.

(4) Rotate the Pressure Adjusting Screw so that the film runs smoothly off the Upper Stabilizer Drum without any tendency to ride up on either of the flanges.

(5) Tighten the Pressure Adjustment Locking Screw.

f. Final Lateral Adjustment.

(1) With the 1 KC film loop running, loosen the Lateral Adjustment Locking Screw.

(2) Connect an AC voltmeter (1,000 ohms/volt sensitivity or better) across terminals 1 and 2 (output) of each of the four Pre-Amplifiers successively and note the readings.

(3) Turn the Lateral Adjusting Screw so that all voltage readings are as nearly uniform as possible.

Issued by
Engineering Department
Printed in U. S. A.
February 1, 1954
Issue #1

NOTE:- In some instances, it may be difficult to obtain the same reading on the fourth (effects) track. The output of the fourth track of both machines should then be the same.

(4) Adjust the gain of each Pre-Amplifier as required, per paragraph C below.

g. Azimuth Adjustment.

(1) Thread an 8 KC (4-track azimuth) test film in the same manner as the 1 KC test film.

(2) With the film running, loosen the Azimuth Adjustment Locking Screw approximately one-half turn.

(3) Connect an AC voltmeter (1,000 ohms/volt sensitivity or better) across terminals 1 and Z (output) of each of the four Pre-Amplifiers successively and note the readings.

(4) Turn the Azimuth Adjusting Screw so that all voltage readings are the same.

NOTE:- In some instances, it may be difficult to obtain the same reading on the fourth (effects) track. The output of the fourth track of both machines should then be the same.

(5) Adjust the gain of each Pre-Amplifier, as required, per paragraph C below.

(6) Tighten the Azimuth Adjustment Locking Screw.

h. The Lateral and Azimuth adjustments are interacting. Paragraphs c and d above should be repeated and paragraph C below followed until all voltage readings are the same on both adjustments.

C. PRE-AMPLIFIER

1. Outputs of all Pre-Amplifiers associated with both machines must be balanced. Paragraph B, 9 above describes the adjustments required to equalize the outputs of the Magnetic Soundhead assuming that the Pre-Amplifiers themselves are balanced. Since the gain setting of the Pre-Amplifiers will affect this balancing, the adjustments of the Magnetic Soundhead and of the Pre-Amplifier are interacting and alternate adjustments of both are necessary to obtain exact balancing.

2. Initially set each Pre-Amplifier gain control, R-10, in mid-position.

3. With a 1 KC test film running, connect an AC voltmeter (1,000 ohms/volt or better) across the output of each Pre-Amplifier successively and note the reading.

4. Adjust R-10 of each Pre-Amplifier so that all readings are the same for all Pre-Amplifiers on both machines.

NOTE:- It may be difficult to balance the fourth (effects track) Pre-Amplifier with the other three. In such cases, balance between machines.

D. TRIPLE CHANGEOVER CABINET

1. Changeover Switch Removal.

a. Depress the Changeover Button and rotate so that the set screw is accessible inside the cabinet.

b. Loosen the Set Screw and slide the button from the switch shaft. Retain the spring.

c. Through the hole in the Cabinet Cover, remove the Changeover Switch Fastening Nut.

d. Remove the Switch from the Bracket and disconnect the wires.

e. Reconnect the wires to the replacing Switch, check the adjustment per the following paragraph and mount the Switch.

2. Changeover Switch Adjustment.

a. Remove the Switch per the preceding paragraph.

b. Loosen the Release Coil Fastening Screw on the Bracket and adjust the position of the Release Coil so that the Latching Spring engages the Latch on the Release Coil Armature with just slight over-travel when the shaft is depressed to its limit. Tighten the fastening screw.

NOTE:- The Release Coil must be positioned so that all making contacts close with slight follow as the Latching Spring locks up. When the Latching Spring is released by moving the armature toward the coil, all making contacts should have slight follow.

3. System Gain Adjustment (AM-202 Only).

a. Terminals 0, -6 and -12 provide fixed system gain attenuation in db.

b. Set the Volume Control in each Changeover Cabinet in mid-position and reconnect the wire (shipped connected to the -6 db terminal) as required to give normal auditorium volume.

Issued by
Engineering Department
Printed in U. S. A.

February 1, 1954
Issue #1

4. High Frequency Equalization.

   a. A Kit of Capacitors, that may be substituted for C1 to C6 inclusive, provide flexible adjustment of the high frequency response.

   b. Values of these capacitors should be established per paragraph K.

E. POWER AMPLIFIER

1. Output Transformer Connection.

   a. Connect the blue wire to the terminal of T2 in accordance with the following table. The yellow wire should not be moved.

Amplifier Per Channel	Connect to T-2 Terminal	No. of LF Speaker Units
1 AM-1027	16 Ohm	1
1 AM-1027	8 Ohm	2
1 AM-1026	16 Ohm	4
1 AM-1026	8 Ohm	2
1 AM-1026	32 Ohm	4 or 6

2. Power Transformer Strapping.

   a. At T3, the green wire should be connected in accordance with the following table for the average line voltage during operating hours.

Average Line Voltage	Connect to T3 Tap
120-130	125 Volt
110-120	115 Volt (Connection as shipped)
100-110	105 Volt

   NOTE:- Average line voltage is the average of line voltage readings taken during operating hours. If the average line voltage is above or below the above limits, the cooperation of the Power Company should be requested to bring the voltage within the recommended 105-125 volt limits.

3. Tube Testing.

   a. The meter on the front panel of each amplifier, together with the Selector Switch serves to test the input and output tubes.

   b. On the AM-1026 Amplifier, set the Selector Switch in position "1" to test V-1 and V-2, position "2" to test V-4 and position "3", to test V-5. If the pointer of the meter is outside the green block, a defective tube is indicated and should be replaced immediately.

NOTE:- Normal setting of the Selector Switch is position "1".

c. On the AM-1027 Amplifier, set the selector switch in position "1" to test V-1, position "2" to test V-3 and position "3" to test V-4. If the pointer of the meter is outside the green block, a defective tube is indicated and should be replaced immediately.

NOTE:- Normal setting of the Selector Switch is position "1".

4. Replacement.

a. Disconnect each of the cable form wires from the terminal strip.

b. Remove the cable clamp.

c. Withdraw the amplifier until the pivot screws are accessible.

d. Remove the pivot screws and nuts and spacing washers.

e. Remove the Amplifier from the cabinet, install the replacing Amplifier and reconnect the wires.

F. PRE-AMPLIFIER POWER SUPPLY

1. Power Transformer Strapping.

a. At T1, the green wire should be connected in accordance with the following table for the average line voltage during operating hours.

Average Line Voltage	Connect to T3 Tap
120-130	125 Volt
110-120	115 Volt (Connection as shipped)
100-110	105 Volt

NOTE:- Average line voltage is the average of line voltage readings taken during operating hours. If the average line voltage is above or below the above limits, the cooperation of the Power Company should be requested to bring the voltage within the recommended 105-125 volt limits.

2. Heater Supply Adjustment.

a. With all Pre-Amplifiers operating, connect a 20,000 ohm/volt voltmeter across terminals "-19V DC" and "+19V DC" and adjust R4 until the reading is exactly 19 volts DC.

Issued by
Engineering Department
Printed in U. S. A.

February 1, 1954
Issue #1

3. Replacement.

   a. Disconnect each of the cable form wires from the terminal strip.

   b. Remove the cable clamp.

   c. Remove the four Power Supply Fastening Screws and the Power Supply.

   d. Install the replacing unit and reconnect the wires.

G. CONTROL UNIT

1. These units are accurately adjusted at the factory and under normal conditions adjustment should not be necessary. However, the performance should be checked at installation as described below.

2. Thread a mixed 1 KC and 12 KC test film in the soundhead in the same manner as described in paragraph B,9,e above.

3. Set the Monitor Selector Switch on the Monitor Control Panel in position #4.

4. With the film running, listen in the System Monitor for the 1 KC signal followed by a silent interval. Proper operation is indicated by clean starting of the 1 KC signal with no "scratchy" sounds caused by bouncing of the relay contacts. Intervals between the 1 KC signals should be completely "dead" with no audible film noise.

5. If adjustment is required, turn R-1 (center hole on the front of the Control Unit) until the operation described in the previous paragraph is obtained.

H. LU-1121 NETWORK

1. High Frequency Speaker Matching.

   a. Strap terminals designated "Strap for 2 HF Units", only when there are two high frequency units in each stage speaker equipment.

   b. Do not strap for one or four high frequency units.

2. High Frequency Speaker Balancing.

   a. Terminals designed "HF Attenuation db 0-1-2-3-4" provide adjustable attenuation of each group of High Frequency Speakers up to 4 db in one db steps.

   b. Connect the wire from the HF Speaker Units initially to terminal "2" and determine the final connection per Section II, paragraph K.

3. Low Frequency Speaker Matching.

   a. Connect the wire from the Low Frequency Speakers to terminal "2 LF" when there are two Low Frequency Units in each stage speaker equipment.

   b. Connect wires from the Low Frequency Units to terminal "1 LF" for 1, 4 or 6 Low Frequency Units.

I. AM-1054 MONITOR AMPLIFIER AND CONTROL PANEL

1. Emergency Monitor Volume Control Setting.

   a. Adjustable Resistor R1, provides pre-set monitor speaker volume when the Monitor Amplifier is "OFF" or has been removed and the Monitor Volume Control is not effective.

      NOTE:- When the Monitor Amplifier is "OFF", R1 provides pre-set monitor volume automatically.

   b. Turn Monitor Amplifier AC Switch "OFF".

   c. Disconnect wires from "SPKR" and "15 Ohm" terminals.

   d. Strap "SPKR" and "15 Ohm" terminals.

   e. Adjust R1 for satisfactory monitor volume with main System Volume Control at normal setting.

2. Monitor Amplifier Removal.

   a. Turn Monitor AC Switch on panel "OFF".

   b. Disconnect the Monitor Amplifier cable form wires from the terminal strip.

   c. Remove the four Monitor Amplifier Mounting Screws and the Amplifier.

      NOTE:- Strap terminal "SPKR" and "15 Ohm" for emergency monitor sound until the monitor amplifier is replaced.

3. Replacement of Monitor Amplifier and Control Panel.

   a. Disconnect each one of the cable form wires from the terminal strip.

   b. Remove the cable clamp.

   c. Withdraw the unit until the pivot screws are accessible.

   d. Remove the pivot screws, nuts and spacing washers.

Issued by
Engineering Department
Printed in U. S. A.

February 1, 1954
Issue #1

e. Remove the unit from the cabinet and install the replacing unit and reconnect the wires.

J. SPEAKER SWITCH KIT

1. Matching Transformer Strapping.

a. T1 should be strapped in accordance with the tabulation on drawing W-1131, subject to the number and type of auditorium speakers used, as described in the Installation Instructions, Section I, paragraph K.

2. Replacement.

a. Remove all external wires connected to the terminal strip.

b. Remove the four terminal strip mounting screws and the four chassis mounting screws in the unit.

c. Install the replacing unit and reconnect the external wires.

K. STAGE SPEAKER EQUIPMENT

1. Make careful listening tests throughout the auditorium and adjust the tilt and angle of each of the three High Frequency Horns to obtain uniform distribution of sound throughout the auditorium.

2. Using a suitable test film, move each High Frequency Horn backward and forward in small steps, instantly reversing the connections to the High Frequency Unit in each position.

NOTE:- Since the reversal of connections must be instantaneous for critical listening, a reversing switch with long leads will be very useful.

3. As determined by listening in the auditorium, the best position of each High Frequency Horn is established when the greatest difference in sound quality is observed upon reversal of connections.

4. Again reverse the connections, the proper connection being that which fills in the mid-range sound giving best quality. Make this connection permanent.

NOTE:- When these connections and the position of each High Frequency Horn are correct, screen characters appear to be speaking from the screen rather than behind or in front of it and high frequency sounds are clean and clear.

5. Also listen throughout the auditorium for echoes, dead spots and reflections from the walls and ceiling. Frequently tilting or angling one or more of the high frequency horns with respect to the auditorium or even moving one of the three horn assemblies slightly, will change the reflection pattern so that there will be uniform level and high quality sound over the entire auditorium.

NOTE:- Since the final frequency response adjustment (see the following paragraph) may have some effect on the reflection pattern, this particular adjustment may be deferred until the frequency response has been established.

6. After all adjustments have been made, fasten the horn sled to the top of the Low Frequency Horn and make sure that all connections and all fastening bolts and nuts are tight.

L. SYSTEM FREQUENCY RESPONSE

1. After the electrical and acoustic phasing have been completed, further listening tests should be made as a preliminary to the adjustment of the frequency response of the system.

2. Selection of the frequency response that will give the highest quality sound reproduction in the auditorium is of extreme importance. The acoustic characteristics of auditoriums vary widely and therefore, careful listening tests should be made and the response changed as necessary.

3. All High Frequency Response adjustments are made in the AM-202 Triple Changeover and Warping Cabinet by the selection of the values of C1 to C6 inclusive, listed in Figure 8 from the Kit supplied.

4. The frequency response of each of the three channels should be the same.

Issued by
Engineering Department
Printed in U. S. A.

February 1, 1954
Issue #1

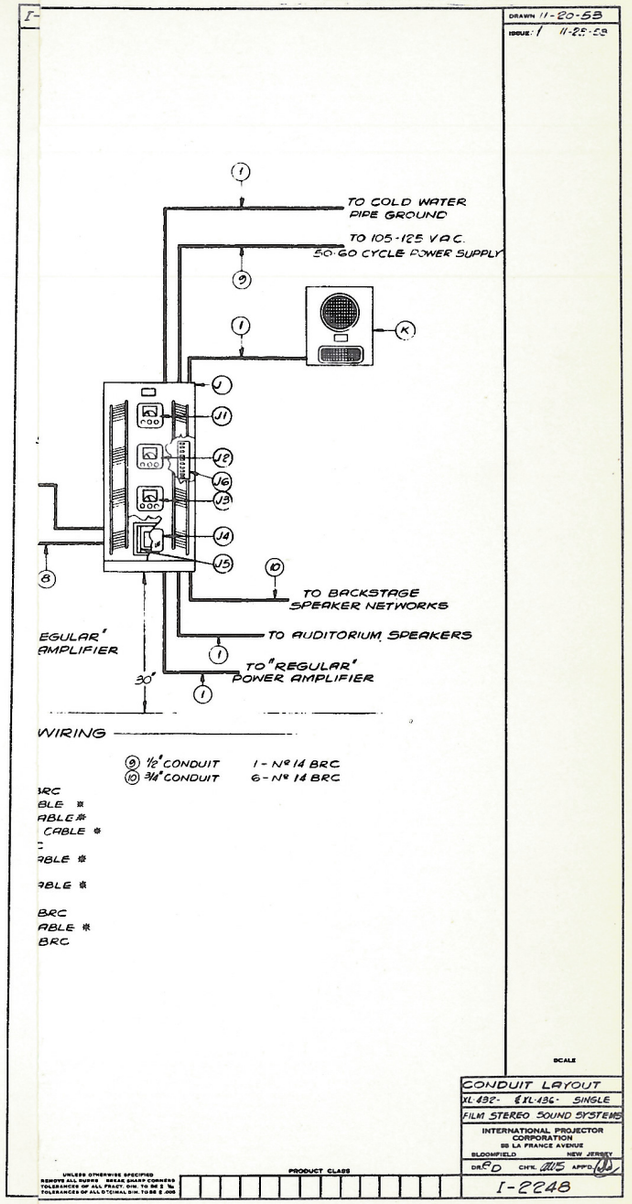

FIGURE 1

XL432 & XL436 TYPE SINGLE FILM
SIMPLEX STEREOPHONIC SOUND SYSTEMS
CONDUIT LAYOUT

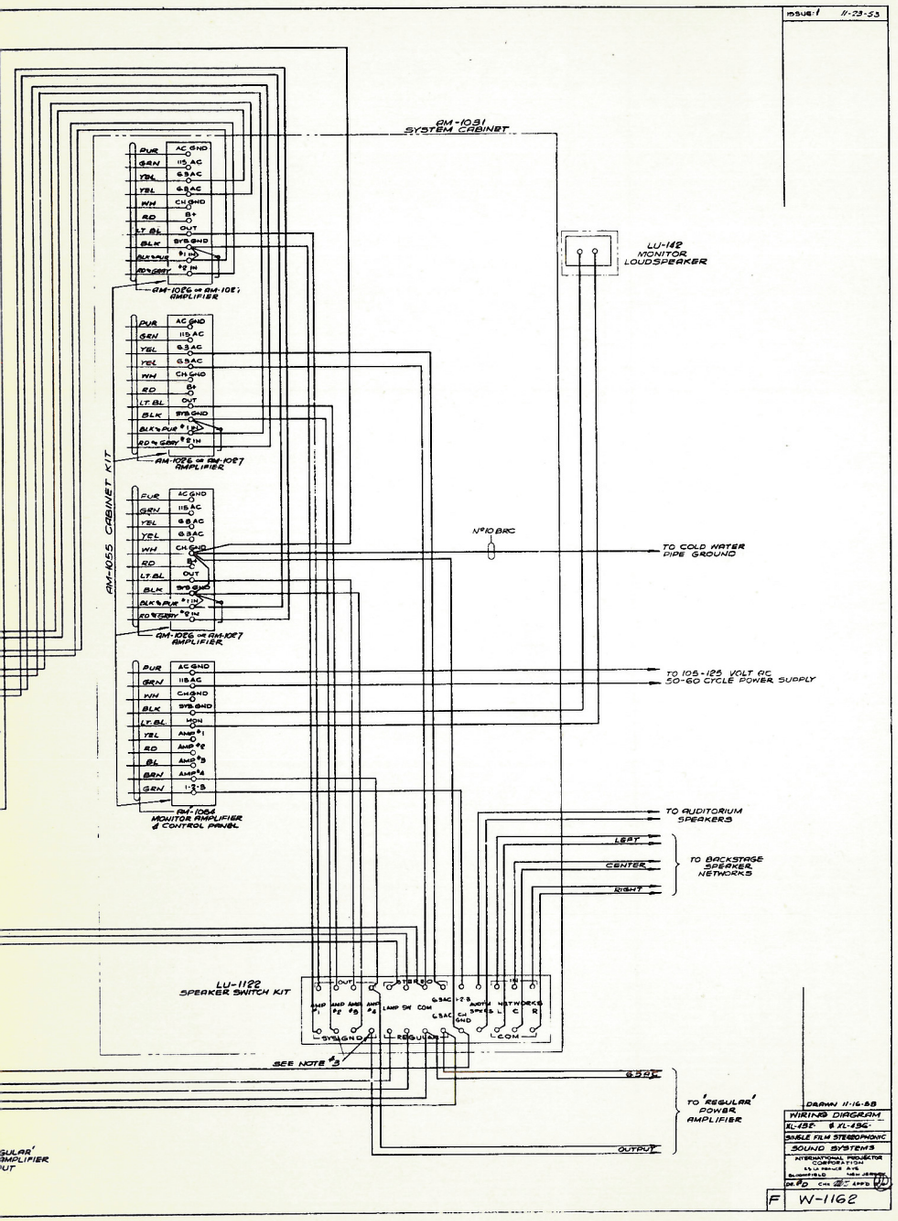

FIGURE 3

XL432 & XL436 TYPE SINGLE FILM
SIMPLEX STEREOPHONIC SOUND SYSTEMS
WIRING DIAGRAM

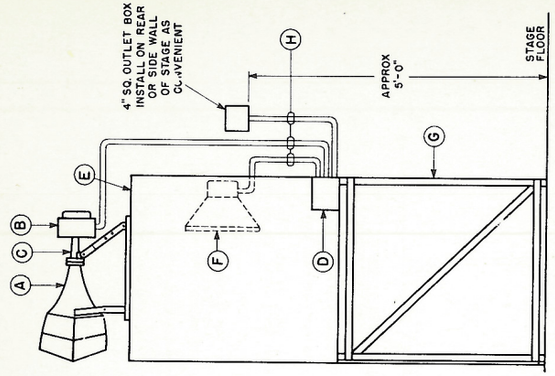

Ⓐ HIGH FREQUENCY HORN LU-1085 (2 x 4) OR LU-1086 (2 x 5) (17"H x 30"W x 27"D) 176 LBS. WITH UNIT)
Ⓑ LU-1104 HIGH FREQUENCY UNIT
Ⓒ LU-2062 HORN THROAT (LU-1085) LU-2063 HORN THROAT (LU-1086)
Ⓓ LU-1121 NETWORK
Ⓔ LU-1106 LOW FREQUENCY HORN (42"H x 77"W x 35"D) (500 LBS., 1 HORN WITH 1 UNIT)
Ⓕ LU-1081 LOW FREQUENCY UNIT
Ⓖ LU-1108 LOW FREQUENCY HORN STAND
Ⓗ NO.16 2-CONDUCTOR TIREX CABLE

FIGURE 2B
STAGE SPEAKER EQUIPMENT LAYOUT
1 HIGH FREQUENCY UNIT
1 LOW FREQUENCY UNIT

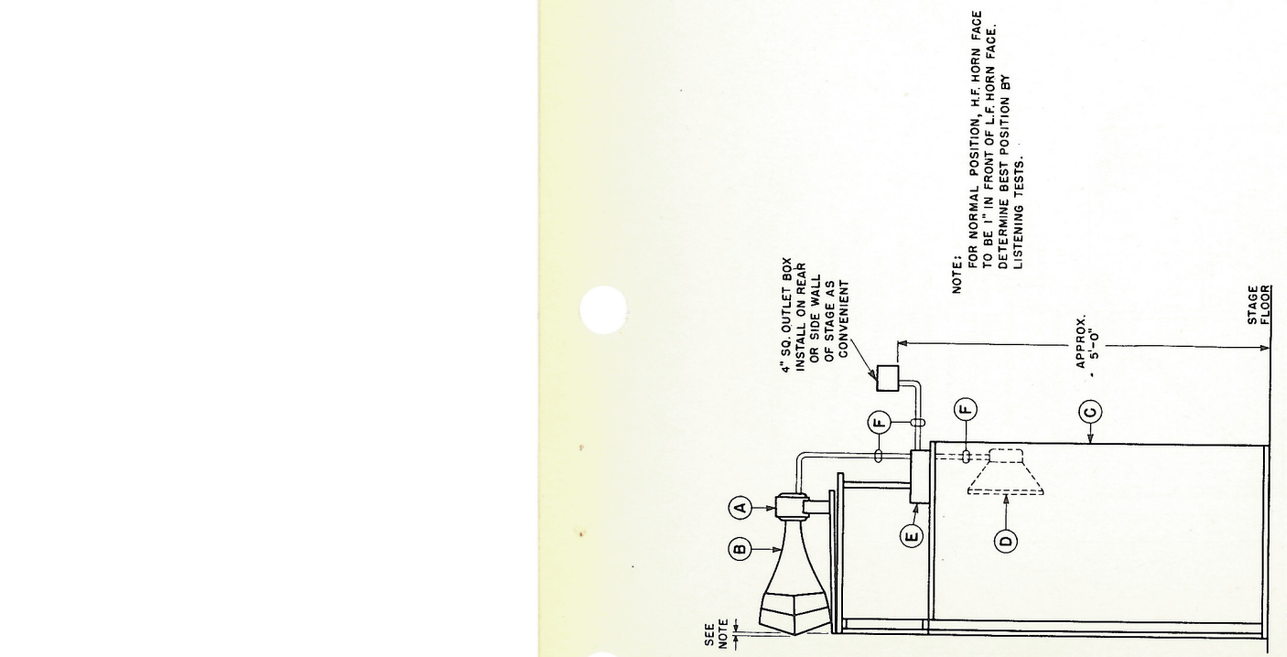

Ⓐ LU-1102 HIGH FREQUENCY UNIT (1)
Ⓑ LU-1099 HIGH FREQUENCY HORN (2 x 4) (9"H x 18"W x 17"D) (17 LBS. WITH UNIT)
Ⓒ LU-1100 LOW FREQUENCY HORN AND WINGS (67"H x 50"W x 24"D, 167 LBS. WITH UNIT)
Ⓓ LU-1101 LOW FREQUENCY UNIT (1)
Ⓔ LU-1098 NETWORK
Ⓕ NO.16 2-CONDUCTOR TIREX CABLE

FIGURE 2A
STAGE SPEAKER EQUIPMENT LAYOUT
(XL432-38 ONLY)
1 HIGH FREQUENCY UNIT
1 LOW FREQUENCY UNIT

Issued by
Engineering Department
Printed in U. S. A.

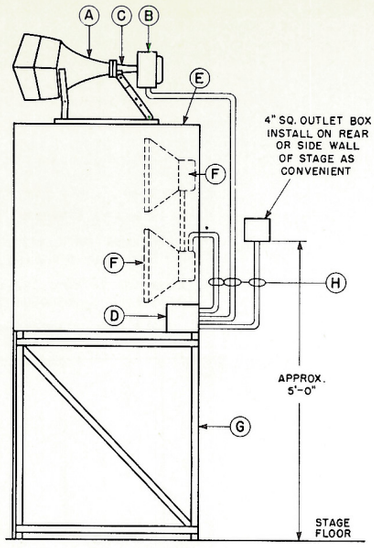

(A) HIGH FREQUENCY HORN
LU-1085 (2×4) OR LU-1086 (2×5)
(17"H×30"W×27"D)(76 LBS. WITH UNIT)

(B) LU-1104 HIGH FREQUENCY UNIT

(C) LU-2062 HORN THROAT (LU-1085)
LU-2063 HORN THROAT (LU-1086)

(D) LU-1121 NETWORK

(E) LU-1107 LOW FREQUENCY HORN
(42"H×77"W×35"D)
(550 LBS., 1 HORN WITH 2 UNITS)

(F) LU-1081 LOW FREQUENCY UNIT (2)

(G) LU-1108 LOW FREQUENCY HORN STAND

(H) NO. 16 2-CONDUCTOR TIREX CABLE

FIGURE 2C
STAGE SPEAKER EQUIPMENT LAYOUT
1 HIGH FREQUENCY UNIT
2 LOW FREQUENCY UNITS

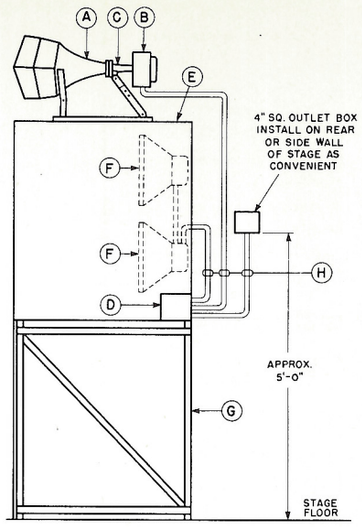

(A) HIGH FREQUENCY HORN
LU-1110 (2×4), LU-1086 (2×5) OR LU-1087 (3×5)
(25"H×30"W×27"D MAXIMUM)
(132 LBS. WITH 2 UNITS MAXIMUM)

(B) LU-1104 HIGH FREQUENCY UNIT (2)

(C) LU-2065 HORN THROAT (LU-1110, LU-1086)
LU-2066 HORN THROAT (LU-1087)

(D) LU-1121 NETWORK

(E) LU-1107 LOW FREQUENCY HORN
(42"H×77"W×35"D)
(550 LBS., ONE HORN WITH 2 UNITS)

(F) LU-1081 LOW FREQUENCY UNIT (2)

(G) LU-1108 LOW FREQUENCY HORN STAND

(H) NO. 16 2-CONDUCTOR TIREX CABLE

FIGURE 2D
STAGE SPEAKER EQUIPMENT LAYOUT
2 HIGH FREQUENCY UNITS
2 LOW FREQUENCY UNITS

Issued by
Engineering Department
Printed in U. S. A.

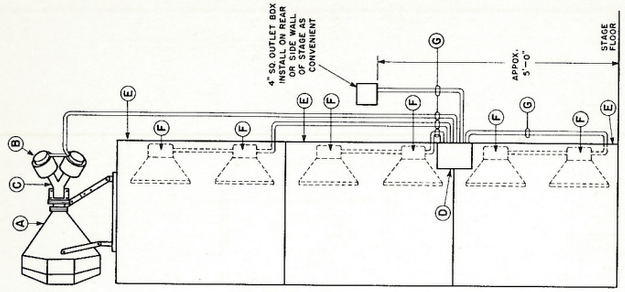

Ⓐ HIGH FREQUENCY HORN (LU-1091 (3x5) OR LU-1092 (3x6) (29"H x 45"W x 38"D) (324 LBS. WITH 4 UNITS)
Ⓑ LU-1104 HIGH FREQUENCY UNIT (4)
Ⓒ LU-2065 HORN THROAT (2)
Ⓓ LU-1121 NETWORK
Ⓔ LU-1107 LOW FREQUENCY HORN (3) (42"H x 77"W x 35"D EACH) (550 LBS., ONE HORN WITH 2 UNITS)
Ⓕ LU-1081 LOW FREQUENCY UNIT (6)
Ⓖ NO.16 2-CONDUCTOR THREX CABLE

FIGURE 2F
STAGE SPEAKER EQUIPMENT LAYOUT
4 HIGH FREQUENCY UNITS
6 LOW FREQUENCY UNITS

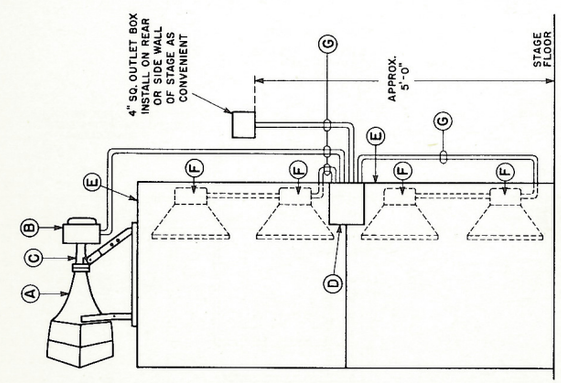

Ⓐ HIGH FREQUENCY HORN (LU-1086 (2x5) OR LU-1087 (3x5) (25"H x 30"W x 27"D MAXIMUM) (132 LBS. WITH 2 UNITS MAXIMUM)
Ⓑ LU-1104 HIGH FREQUENCY UNIT (2)
Ⓒ LU-2065 HORN THROAT (LU-1086)
LU-2066 HORN THROAT (LU-1087)
Ⓓ LU-1121 NETWORK
Ⓔ LU-1107 LOW FREQUENCY HORN (2) (42"H x 77"W x 35"D EACH) (550 LBS., ONE HORN WITH 2 UNITS)
Ⓕ LU-1081 LOW FREQUENCY UNIT (4)
Ⓖ NO.16 2-CONDUCTOR CABLE

FIGURE 2E
STAGE SPEAKER EQUIPMENT LAYOUT
2 HIGH FREQUENCY UNITS
4 LOW FREQUENCY UNITS

Issued by
Engineering Department
Printed in U. S. A.

ALTEC SERVICE CORPORATION
SIMPLEX
SOUND EQUIPMENT BULLETIN

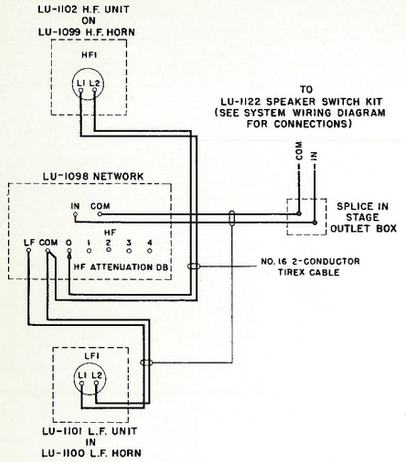

FIG. 4A

STAGE SPEAKER EQUIPMENT
WIRING DIAGRAM
(XL432-38 ONLY)

1 HIGH FREQUENCY SPEAKER UNIT
1 LOW FREQUENCY SPEAKER UNIT

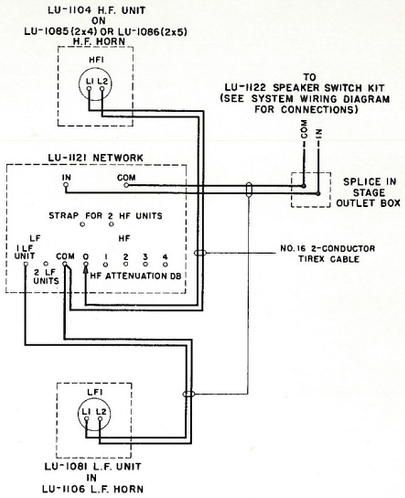

FIG. 4B

STAGE SPEAKER EQUIPMENT
WIRING DIAGRAM

1 HIGH FREQUENCY SPEAKER UNIT
1 LOW FREQUENCY SPEAKER UNIT

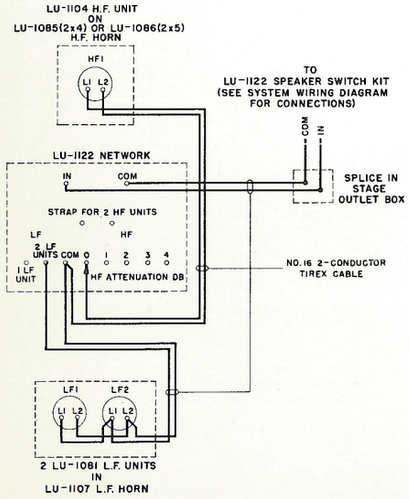

FIG. 4C

STAGE SPEAKER EQUIPMENT
WIRING DIAGRAM

1 HIGH FREQUENCY SPEAKER UNIT
2 LOW FREQUENCY SPEAKER UNITS

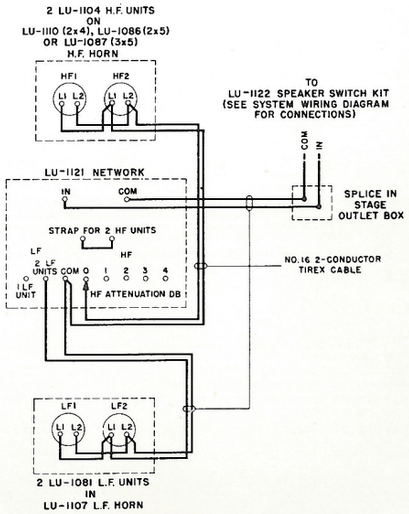

FIG. 4D

STAGE SPEAKER EQUIPMENT
WIRING DIAGRAM

2 HIGH FREQUENCY SPEAKER UNITS
2 LOW FREQUENCY SPEAKER UNITS

Issued by
Engineering Department
Printed in U. S. A.

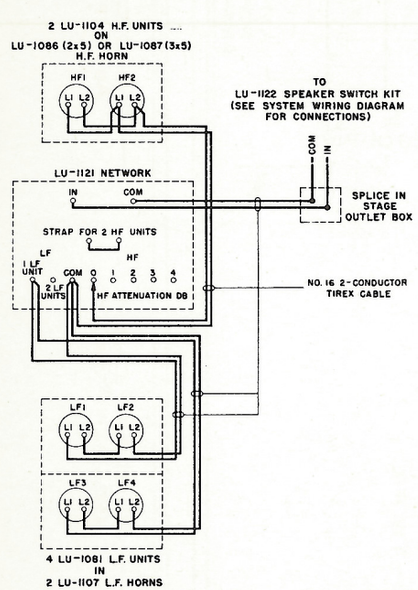

FIG. 4E

STAGE SPEAKER EQUIPMENT WIRING DIAGRAM

2 HIGH FREQUENCY SPEAKER UNITS
4 LOW FREQUENCY SPEAKER UNITS

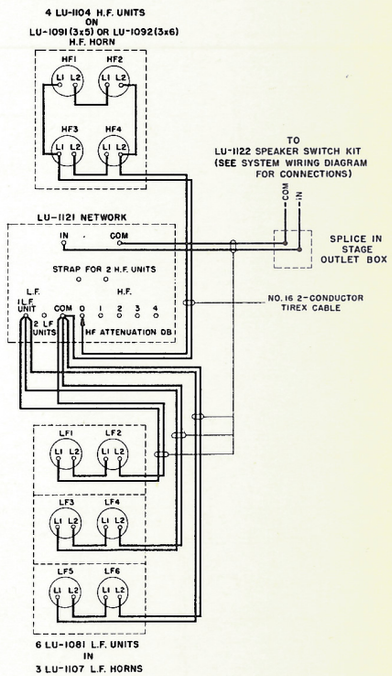

FIG. 4F

STAGE SPEAKER EQUIPMENT WIRING DIAGRAM

4 HIGH FREQUENCY SPEAKER UNITS
6 LOW FREQUENCY SPEAKER UNITS

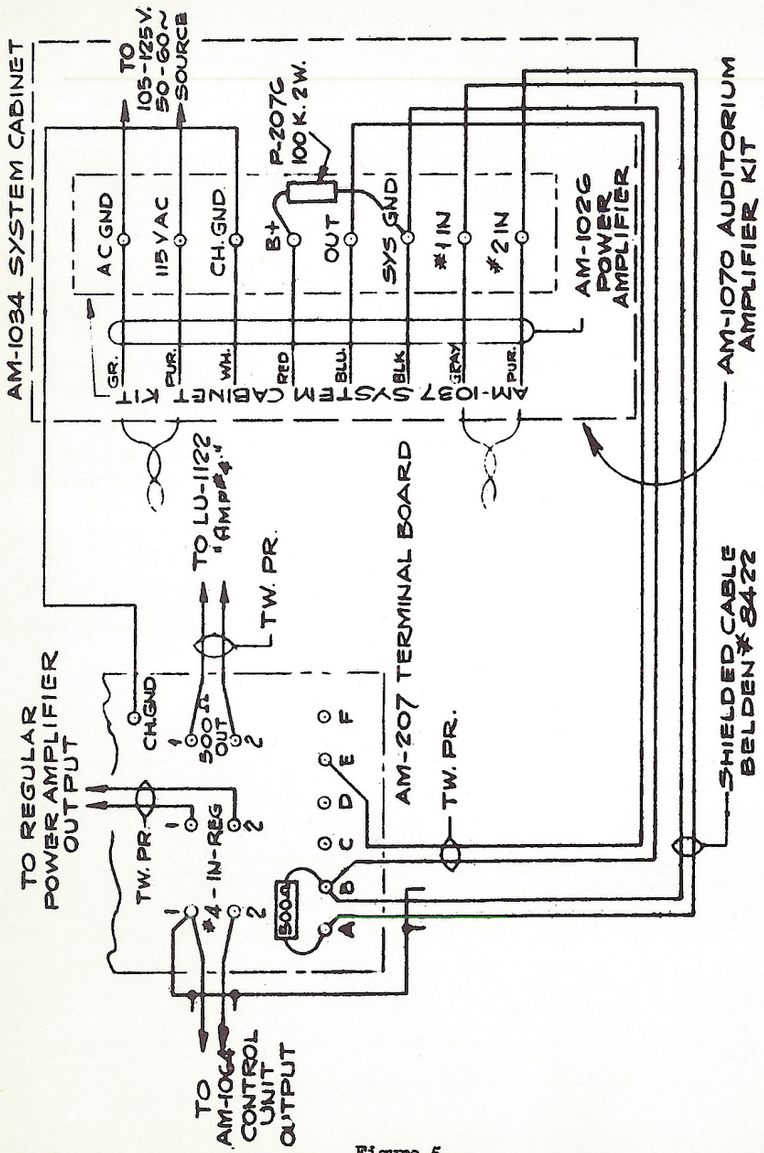

Figure 5

AM-1070
AUDITORIUM AMPLIFIER KIT
WIRING DIAGRAM

Issued by
Engineering Department
Printed in U. S. A.

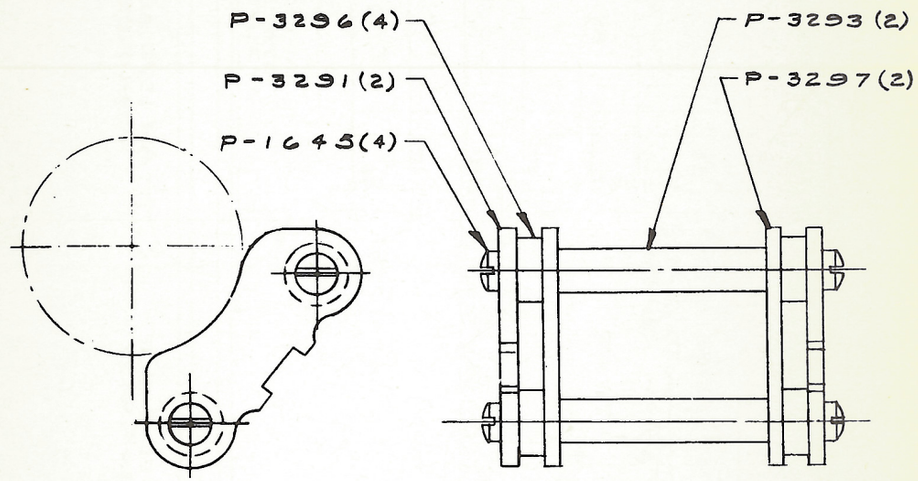

Figure 6

TENSION SHOE ASSEMBLY

Issued by
Engineering Department
Printed in U. S. A.

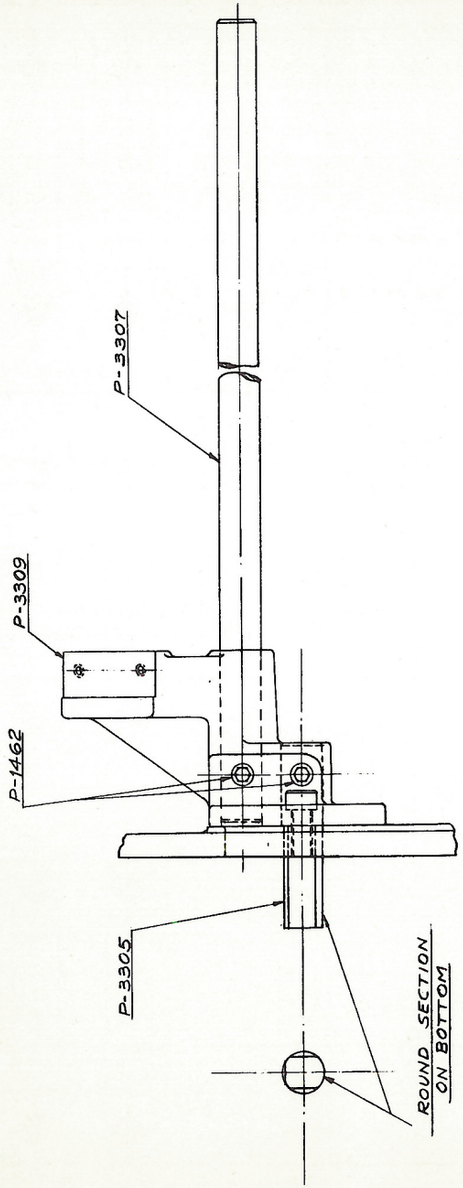

Figure 7

SUPPORT FOR
4" CINEMASCOPE LENS
ASSEMBLY

Issued by
Engineering Department
Printed in U. S. A.

AM-202 TRIPLE CHANGEOVER CABINET ADJ. (a)					RELATIVE RESPONSE-1000 CYCLE REFERENCE-0db CYCLES PER SECOND (c)						
CURVE DESIG	SYS. GAIN ADJ.	C1,C3 & C5 MF EA.	C2,C4 & C6 MF EA.	STRAP AS PER FIG.	2000	3000	4000	5000	6000	7000	8000
H-1	0db	.03	.03	3	0	0	0	0	0	0	0
	(b) -6db	.03	OPEN	1							
	-12db	.03	.03	2							
H-2	0db	.15	.15	3	-.5	-1.0	-1.5	-2.0	-2.5	-3.3	-3.5
	-6db	.1	OPEN	1							
	-12db	.15	OPEN	1							
H-3	0db	.15	.03	2	-1.0	-2.5	-3.5	-5.0	-5.5	-6.5	-7.0
	-6db	.1	.1	2							
	-12db	.1	.1	2							
H-4	0db	.15	.15	2	-2.0	-4.0	-6.0	-7.0	-8.0	-9.0	-10
	-6db	.15	.15	2							
	-12db	.15	.15	2							

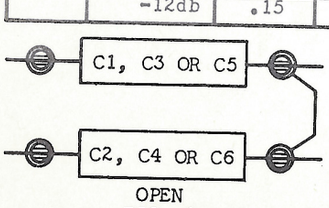

OPEN
FIG. 1

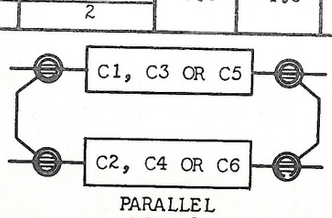

PARALLEL
FIG. 2

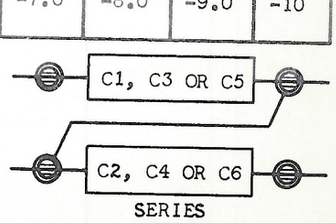

SERIES
FIG. 3

(a) Refer to Drawings W-1128 and W-1133.
(b) RESPONSE AS SHIPPED.
(c) Typical Response. Tolerance ±1 db.
Signal Source- Oscillator with 10 megohms in series.

FIGURE 8
SIMPLEX XL STEREOPHONIC SOUND SYSTEMS
HIGH FREQUENCY RESPONSE

Issued by
Engineering Department
Printed in U.S.A.

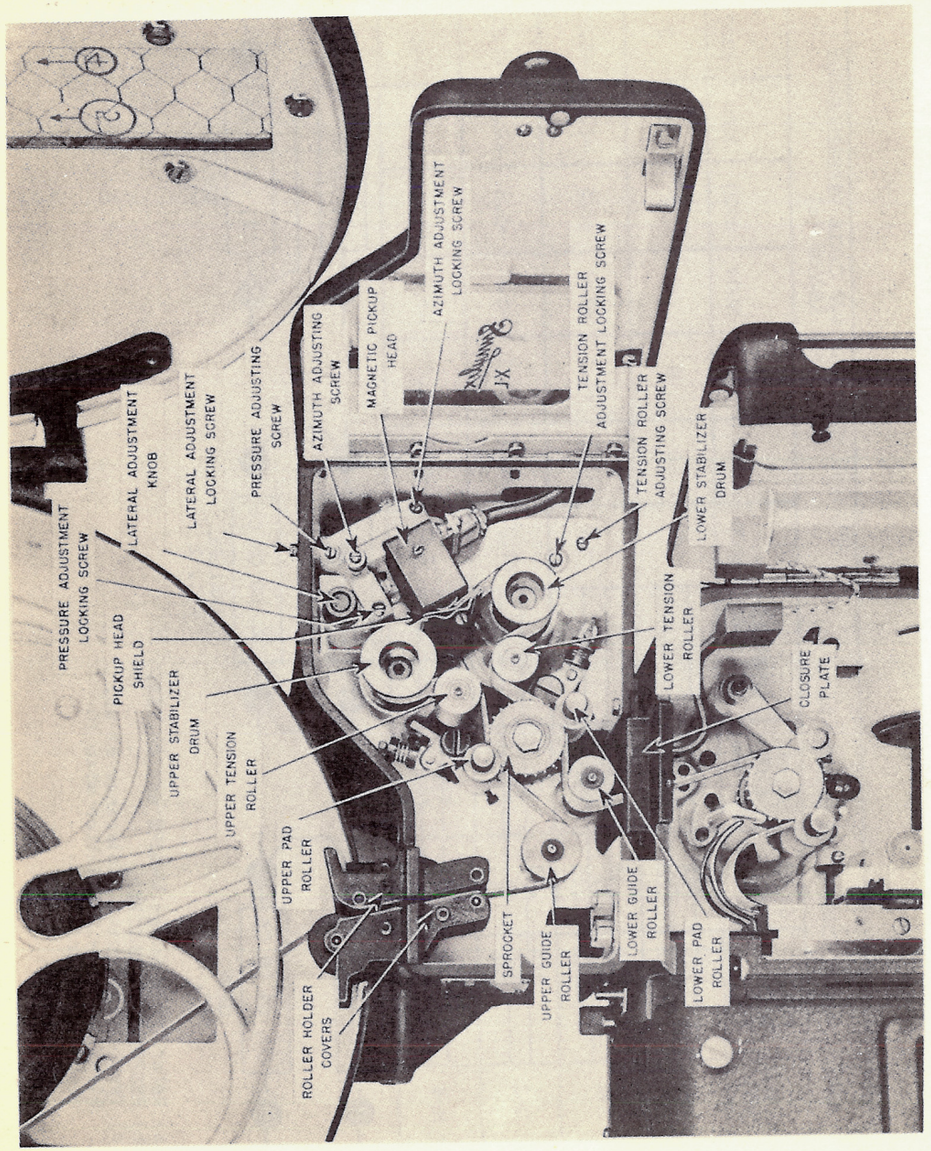

FIGURE 9
4-TRACK MAGNETIC SOUNDHEAD

Issued by
Engineering Department
Printed in U. S. A.

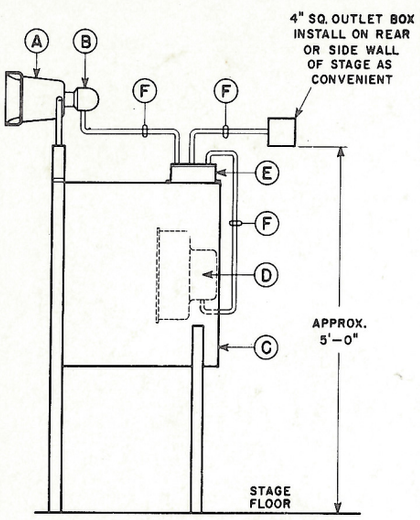

(A) LU-1125 HIGH FREQUENCY HORN
(9¼"H x 18½"W x 14½"D)
(14 LBS WITH UNIT)

(B) LU-1124 HIGH FREQUENCY UNIT

(C) LU-1127 LOW FREQUENCY HORN
(60"H x 48"W x 26"D)
(124 LBS WITH UNIT)

(D) LU-1123 LOW FREQUENCY UNIT

(E) LU-1126 NETWORK

(F) NO.16 2-CONDUCTOR TIREX CABLE

FIGURE 2G

STAGE SPEAKER EQUIPMENT LAYOUT
(XL432-39, XL433-39 SYSTEMS ONLY)

1 HIGH FREQUENCY UNIT
1 LOW FREQUENCY UNIT

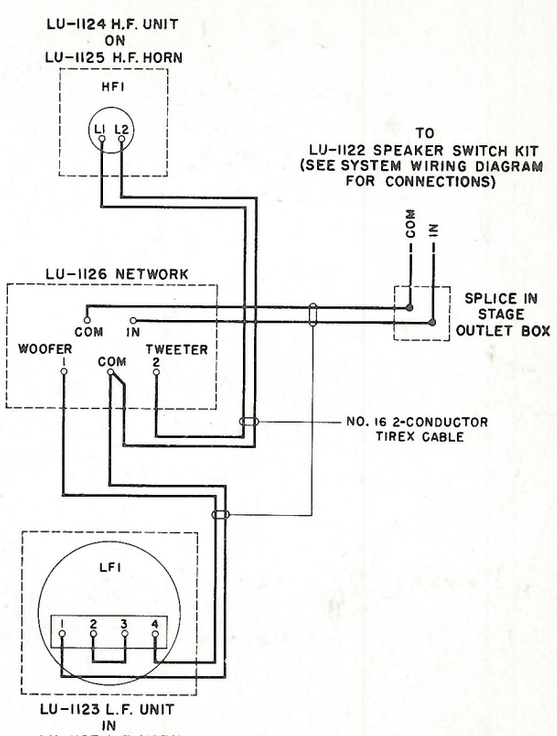

FIG. 4G

STAGE SPEAKER EQUIPMENT
WIRING DIAGRAM
(XL432-39, XL433-39 SYSTEMS ONLY)

1 HIGH FREQUENCY SPEAKER UNIT
1 LOW FREQUENCY SPEAKER UNIT

1 Page - Page 1
Issued by
Engineering Department
Printed in U. S. A.
March 22, 1954
Issue #1

I-2248

DRAWN 11-20-58
ISSUE: 1 11-25-58

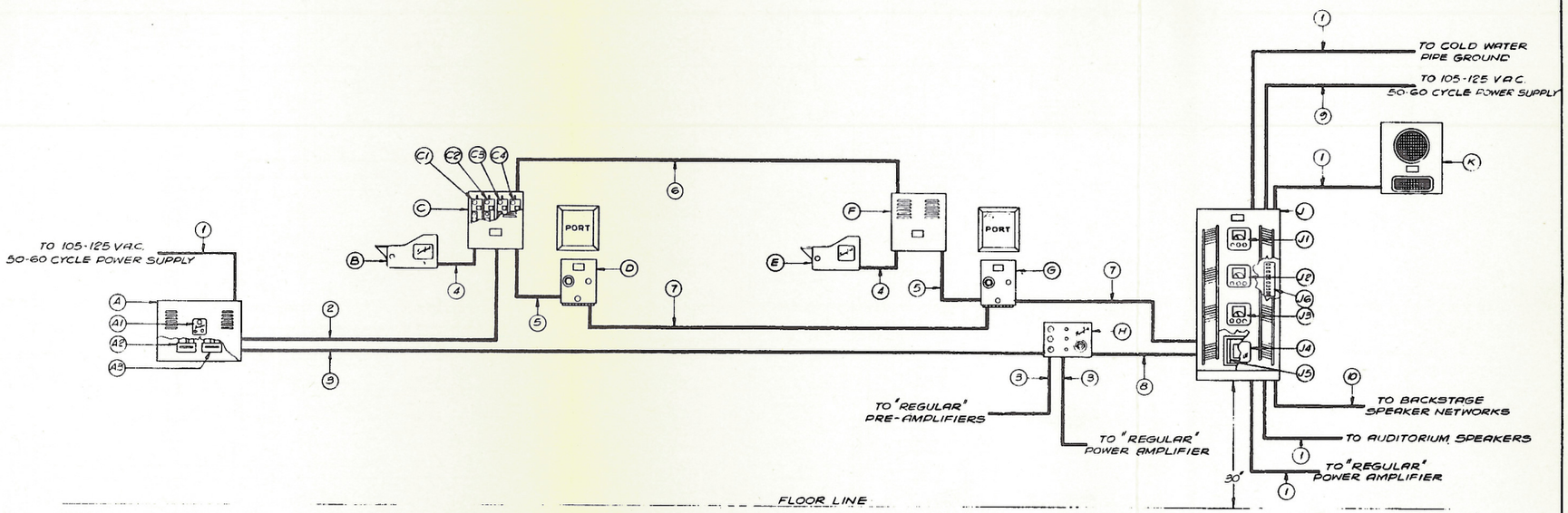

EQUIPMENT

(A) PU-1012 PRE-AMPLIFIER POWER SUPPLY CABINET (16"H × 21"W × 8 3/4"D)(38 LBS. COMPLETE)
INSTALL THE FOLLOWING:-
(A1) PU-1011 PRE-AMPLIFIER POWER SUPPLY
(A2) AM-1064 CONTROL UNIT
(A3) AM-1064 CONTROL UNIT

(B) & (E) SH-1025 MAGNETIC SOUNDHEAD (12"L × 10"W × 6 1/2"H)(20 LBS)

(C) & (F) AM-1066 PRE-AMPLIFIER CABINET (13 1/4"H × 13"W × 8 1/4"D)(12 LBS. COMPLETE)
WITH THE FOLLOWING:-
(C1) & (F1) AM-1065 PRE-AMPLIFIER
(C2) & (F2) AM-1065 PRE-AMPLIFIER
(C3) & (F3) AM-1065 PRE-AMPLIFIER
(C4) & (F4) AM-1065 PRE-AMPLIFIER

(D) AM-203 TRIPLE CHANNEL CHANGEOVER CABINET (12"H × 9 1/8"W × 6"D)(11 LBS)

(G) AM-202 TRIPLE CHANNEL CHANGEOVER & WARPING CABINET (12"H × 9 1/8"W × 6"D)(11 LBS)

(H) AM-207 SYSTEM SELECTOR BOX (6"H × 8"W × 4"D)(7 LBS)

(J) AM-1031 SYSTEM CABINET (44 1/4"H × 21"W × 13 3/4"D) (265 LBS COMPLETE)
INSTALL THE FOLLOWING:-
(J1) AM-1026 or AM-1027 AMPLIFIER
(J2) AM-1026 or AM-1027 AMPLIFIER
(J3) AM-1026 or AM-1027 AMPLIFIER
(J4) AM-1054 MONITOR AMPLIFIER & CONTROL PANEL
(J5) LU-1128 OUTPUT SWITCH KIT
(J6) AM-1055 SYSTEM CABINET KIT

(K) LU-142 MONITOR SPEAKER ASSEMBLY (18"H × 15"W × 8D)(19 LBS)

CONDUIT AND WIRING

(1) 1/2" CONDUIT	2-N°14 BRC	
(2) 1" CONDUIT	3-N°14 BRC 1-N°14 TW.PR BRC 2-SHIELDED CABLE *	
(3) 1/2" CONDUIT	1-SHIELDED CABLE *	
(4) 1" FLEXIBLE CONDUIT	4-SHIELDED CABLE * 1-N°14 BRC	
(5) 3/4" CONDUIT	3-SHIELDED CABLE * 1-N°14 BRC	
(6) 3/4" CONDUIT	1-SHIELDED CABLE * 2-N°14 BRC 1-N°14 TW.PR BRC	
(7) 1" CONDUIT	3-SHIELDED CABLE * 1-N°14 TW.PR BRC 1-N°14 BRC	
(8) 1" CONDUIT	8-N°14 BRC	
(9) 1/2" CONDUIT	1-N°14 BRC	
(10) 3/4" CONDUIT	6-N°14 BRC	

NOTE: LOCATION FOR AM-1065 CABINETS MIN. DISTANCE 3 FEET FROM MOTORS & PU-1012 CABINET

SCALE

CONDUIT LAYOUT
XL-432- & XL-436- SINGLE FILM STEREO SOUND SYSTEMS
INTERNATIONAL PROJECTOR CORPORATION
99 LA FRANCE AVENUE
BLOOMFIELD NEW JERSEY
DR BD CH'K. APP'D
I-2248

UNLESS OTHERWISE SPECIFIED REMOVE ALL BURRS BREAK SHARP CORNERS TOLERANCES OF ALL FRACT. DIM. TO BE ± 1/64 TOLERANCES OF ALL DECIMAL DIM. TO BE ± .005

PRODUCT CLASS

Issued by
Engineering Department
Printed in U.S.A.

FIGURE 1
XL432 & XL436 TYPE SINGLE FILM
SIMPLEX STEREOPHONIC SOUND SYSTEMS
CONDUIT LAYOUT

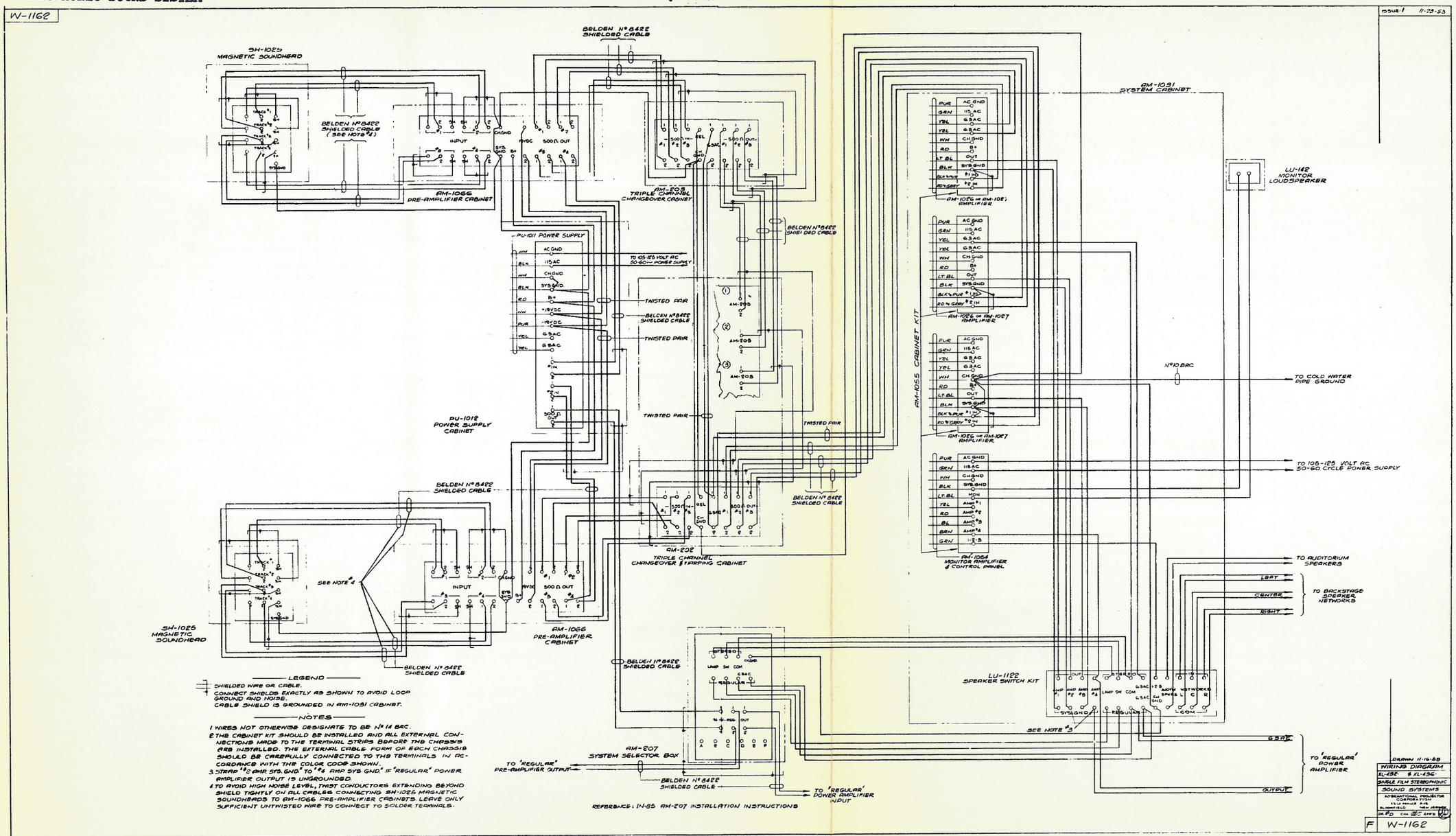

Issued by
Engineering Department
Printed in U.S.A.

FIGURE 3
XL432 & XL436 TYPE SINGLE FILM
SIMPLEX STEREOPHONIC SOUND SYSTEMS
WIRING DIAGRAM

ADDENDUM #1

1. PURPOSE - To call attention to certain errors in Issue #1 of this bulletin dated February 1, 1954 and supply the correct data.

   Note - These corrections also apply to information contained in the temporary Stereophonic Data Sheets Pages 63-66.

2. CORRECTIONS -

   Page 4, Paragraph 3, Line 5 - Change to read: "Power Amplifier with a nominal input level of -20 db/6 mw".

   Page 5, Paragraph 6, Line 2 - Change to read: "Systems having a power amplifier with a Nominal Input Level of less than -20 db/6 mw".

   Page 5, Paragraph 7 - Delete Note and sub-paragraphs (c), (d), (e) and (f). Add - Connect a suitable 500/500 ohm matching transformer (Peerless E-372-Q or equivalent) as follows: Primary-Terminals A & #4-IN-1 Secondary-Terminals B & E

   Page 6, Paragraph 8, sub-paragraph (a) - Change first line to read: "The AM-1070, AM-1071 and AM-1073 Auditorium Amplifier Kits are -------".
   Add - Note: In some installations it may be necessary to remove the jumper between Terminals "#4-IN-1" and "REG-IN-1", in order to avoid a system ground loop.

   Fig. 5 - Add "AM-1027" and "AM-1080" to power amplifier type in AM-1034 System Cabinet.

SIMPLEX XL600 SOUND SYSTEM
HIGH FREQUENCY RESPONSE ADJUSTMENTS

REFERENCE DRAWINGS:
W-1198 AM-1151 Cabinet Kit, Wiring Diagram
W-1207 XL600 Sound System, Schematic

1. The AM-1151 Cabinet includes a warping network for use when the regular optical system does not provide for adjustment of the high frequency response. The network is adjusted in accordance with the following table.

Curve Desig.	AM-1151 Cabinet Kit Adjustments						Relative Response-1000 Cycle Reference-ODB Cycles per Second (d)								
	C-1 MF	C-2 MF	C-3 MF	C-4 MF	R-1 Ohms	NOTE REF.	2000	2500	3000	3500	4000	5000	6000	7000	8000
H1	0.03	0.03	0.03	0.03	120	(a)	+1.0	+2.3	+3.9	+4.7	+3.9	-0.6	-4.5	-8.0	-11.5
H2	Open	0.03	Open	0.03	120	-	+1.2	+2.5	+4.1	+4.7	+3.7	-0.4	-5.0	-9.3	-13.0
H3	0.03	0.03	0.03	0.03	470	(a)	-1.0	-1.0	-0.7	0	-0.1	-4.6	-8.0	-10.7	-13.5
H4	0.03	0.03	0.03	0.03	Open	(a)	-1.0	-1.5	-1.9	-2.6	-3.6	-6.1	-8.7	-12.0	-15.0
H5	Open	0.03	Open	0.03	470	-	-0.8	-0.8	-0.7	0	-0.6	-4.1	-8.5	-11.7	-15.0
H6	Open	0.03	Open	0.03	Open	(b)	-0.7	-1.0	-1.9	-2.8	-4.1	-6.6	-10.0	-13.0	-16.5
H7	0.03	0.03	0.03	0.03	120	(c)	+1.8	+3.0	+4.3	+4.5	+2.9	-2.1	-7.5	-12.0	-16.0
H8	0.03	0.03	0.03	0.03	470	(c)	-0.5	-0.5	-0.4	0	-1.1	-6.6	-11.0	-15.0	-18.5
H9	0.03	0.03	0.03	0.03	Open	(c)	-0.7	-1.2	-1.9	-3.0	-4.6	-8.3	-12.5	-16.8	-20.3
H10	Open	0.1	Open	0.1	120	-	+2.3	+3.0	+4.1	+3.5	+0.9	-6.6	-12.5	-17.0	-21.5
H11	Open	0.1	Open	0.1	470	-	-0.5	-0.6	-0.8	-1.1	-3.6	-10.6	-15.7	-19.5	-24.0
H12	Open	0.1	Open	0.1	Open	-	-1.8	-2.0	-2.6	-4.5	-7.1	-12.6	-17.5	-21.5	-25.0

NOTES

(a) Connect C1, C2 and C3, C4 in series as follows:-

(1) Remove the strap between right terminals of C1 and C2 and the left terminals of C3 and C4.

(2) Strap the left terminal of C1 to the right terminal of C2.

(3) Strap the right terminal of C3 to the left terminal of C4.

(b) Response as shipped.

(c) Connect C1, C2 and C3, C4 in parallel as follows:-

(1) Strap the left terminals of C1 and C2.

(2) Strap the right terminals of C3 and C4.

(d) The SMPTE-Motion Picture Research Council Test Film ASFA-2 was used in obtaining all data. If other test films are used, some differences are to be expected.

Issued by
Engineering Department
Printed in U. S. A.

March 14, 1955
Issue #1

SIMPLEX THREE CHANNEL MAGNETIC STEREOPHONIC / OPTICAL SOUND SYSTEM
(EQUIPMENT REQUIREMENTS FOR CONVERSION OF AN EXISTING XL OPTICAL
SOUND SYSTEM TO AN XL 500 3 CHANNEL STEREOPHONIC SYSTEM)

COMPONENT NUMBER	DESCRIPTION	XL2-11 TO 532-311	XL2-12 TO 532-312	XL4-12 TO 532-312	XL4-22 TO 532-322	XL6-12 TO 536-312	XL6-22 TO 536-322	XL6-24 TO 536-324
		← SPECIFY XL-500 SYSTEM REQUIRED →						
		← LESS THE FOLLOWING COMPONENTS →						
AM-1027	POWER AMPLIFIER	1	1	2	2	–	–	–
AM-1026	" "	–	–	–	–	1	1	1
LU-143	STAGE SPEAKER EQUIP.	1	–	–	–	–	–	–
LU-144	" " "	–	1	1	–	1	–	–
LU-145	" " "	–	–	–	1	–	1	–
LU-146	" " "	–	–	–	–	–	–	1
AM-1028	PRE-AMPLIFIER	1	1	1	1	1	1	1
AM-1031	SYSTEM CABINET (4 PLACE)	1	1	1	1	1	1	1
AM-1054	MONITOR AMP. & CONTROL PANEL	1	1	1	1	1	1	1
LU-142	MONITOR SPEAKER	1	1	1	1	1	1	1
LU-1121	SPEAKER NETWORK ASSY.	1	1	1	1	1	1	1
		ADDITIONAL EQUIPMENT REQUIRED						
AM-1092	XL OPTICAL CONVERSION KIT	1	1	1	1	1	1	1
	FOR FOUR CHANNEL INSTALLATION ADD:							
AM-1064	CONTROL UNIT	1	1	1	1	1	1	1
AM-1065	PRE-AMPLIFIER	1	1	1	1	1	1	1
P-3257	TRANSFORMER	1	1	1	1	1	1	1
LU-150	AUDITORIUM SPEAKER	← AS REQUIRED →						
LU-151	" "	← AS REQUIRED →						

EQUIPMENT REQUIREMENTS FOR A COMPLETE "NEW THEATRE"
XL-500 3 CHANNEL MAGNETIC STEREOPHONIC / OPTICAL SYSTEM

COMPONENT NUMBER	DESCRIPTION	532-38	532-39	532-311	532-312	536-312	536-322	536-324
		← SPECIFY XL-500 SYSTEM REQUIRED →						
		← PLUS THE FOLLOWING OPTICAL KIT →						
AM-1093	XL-500 NEW THEATRE EQUIP. KIT	*1	*1	*1	*1	*1	*1	*1
	FOR FOUR CHANNEL INSTALLATION ADD:							
AM-1026	POWER AMPLIFIER	–	–	–	–	1	1	1
AM-1027	" "	1	1	1	1	–	–	–
AM-1031	SYSTEM CABINET (4 PLACE)	1	1	1	1	1	1	1
AM-1037	SYSTEM CABINET KIT	1	1	1	1	1	1	1
AM-1091	XL-500 4th CHANNEL KIT	1	1	1	1	1	1	1
LU-150	AUDITORIUM SPEAKER	← AS REQUIRED →						
LU-151	" "	← AS REQUIRED →						

*FOR FOUR CHANNEL INSTALLATION ORDER AM-1093 OPTICAL KIT LESS ONE (1) AM-1034

3 Pages - Page 1

Issued by
Engineering Department
Printed in U.S.A.

August 23, 1955
Issue #1

6/23/55

ALTEC SERVICE CORPORATION
SIMPLEX
SOUND EQUIPMENT BULLETIN

SIMPLEX THREE CHANNEL MAGNETIC STEREOPHONIC / OPTICAL SOUND SYSTEMS(20N)
(FOR MODERNIZATION OF ANY EXISTING OPTICAL SOUND SYSTEM OTHER THAN XL)

	COMPONENT NUMBER	DESCRIPTION	XL101	XL532 -38	XL532 -39	XL532 -311	XL532 -312	XL536 -312	XL536 -322	XL536 -324
REPRODUCER EQUIPMENT	SH-1025	MAGNETIC SOUNDHEAD	–	2	2	2	2	2	2	2
	SH-1026	" " (MIXER TYPE)	2	–	–	–	–	–	–	–
	AM-211	FOUR CHANNEL CHANGEOVER CAB.	2	2	2	2	2	2	2	2
	AM-1079	WARPING UNIT	1	–	–	–	–	–	–	–
AMPLIFIER EQUIPMENT	AM-1026	POWER AMPLIFIER	–	–	–	–	–	3	3	3
	AM-1027	"	–	3	3	3	3	–	–	–
	AM-1028	PRE-AMPLIFIER	–	1	1	1	1	1	1	1
	AM-1031	SYSTEM CABINET (4 PLACE)	–	1	1	1	1	1	1	1
	AM-1054	MONITOR AMP. & CONTROL PANEL	–	–	–	1	1	1	1	1
	AM-1055	SYSTEM CABINET KIT	–	–	–	1	1	1	1	1
	AM-1062	MONITOR CONTROL PANEL & SYSTEM CAB. KIT	–	1	1	–	–	–	–	–
	AM-1065	PRE-AMPLIFIER	2	3	3	3	3	3	3	3
	AM-1066	" CABINET	1	1	1	1	1	1	1	1
	AM-1089	SYSTEM CONTROL CABINET	+	1	1	1	1	1	1	1
	PJ-1011	PRE-AMPLIFIER POWER SUPPLY	1	1	1	1	1	1	1	1
	PJ-1012	POWER SUPPLY CABINET	1	–	–	–	–	–	–	–
	PJ-1014	" " "	–	1	1	1	1	1	1	1
LOUD-SPEAKER EQUIPMENT	LU-143	STAGE SPEAKER EQUIPMENT	–	–	–	3	–	–	–	–
	LU-144	" " "	–	–	–	–	3	3	–	–
	LU-145	" " "	–	–	–	–	–	–	3	–
	LU-146	" " "	–	–	–	–	–	–	–	3
	LU-148	" " "	–	3	–	–	–	–	–	–
	LU-160	" " "	–	–	3	–	–	–	–	–
	LU-1121	SPEAKER NETWORK ASSEMBLY	–	–	–	3	3	3	3	3
ACCESSORY EQUIPMENT	AM-207	SYSTEM SELECTOR BOX	1	–	–	–	–	–	–	–
	LU-142	MONITOR SPEAKER	–	1	1	1	1	1	1	1
	PJ-1013	POWER SUPPLY DUMMY LOAD	2	–	–	–	–	–	–	–
EMERGENCY TUBE KITS	AM-1063	SPARE TUBE KIT	1	1	1	1	1	1	1	1
	AM-1067	" " "	–	1	1	1	1	–	–	–
	AM-1068	" " "	–	–	–	–	–	1	1	1
FOR FOUR CHANNEL INSTALLATION ADD: *AM-1091 XL500 4th CHANNEL KIT			1	1	1	1	1	1	1	1
LU-150 AUDITORIUM SPEAKER			AS REQUIRED							
LU-151 "			AS REQUIRED							
IF NEW FOURTH CHANNEL POWER AMPLIFIER EQUIPMENT IS DESIRED, ADD: AM-1070 AUDITORIUM AMP. KIT			–	–	–	–	–	1	1	1
AM-1071 " "			1	1	1	1	1	–	–	–

*SOLD ONLY WITH COMPLETE SOUND SYSTEM

6/23/55

SIMPLEX XL MAGNETIC STEREOPHONIC/OPTICAL SOUND KITS

AM-1070 AMPLIFIER KIT

1 - AM-1026	Power Amplifier
1 - AM-1034	System Cabinet (Single Place)
1 - AM-1037	Cabinet Kit
1 - P-2076	Resistor

AM-1071 AMPLIFIER KIT

1 - AM-1027	Power Amplifier
1 - AM-1034	System Cabinet (Single Place)
1 - AM-1037	Cabinet Kit
1 - P-2076	Resistor

AM-1091 XL500 4TH CHANNEL KIT

1 - AM-1064	Control Unit
1 - AM-1065	Pre-Amplifier
1 - P-3257	Transformer

AM-1092 XL500 OPTICAL CONVERSION KIT

1 - AM-1034	System Cabinet (Single Place)
1 - AM-1050	Cabinet Kit
1 - AM-1081	Monitor Control Panel
1 - G-2474	Network Box

AM-1093 XL500 NEW THEATRE EQUIPMENT KIT

1 - AM-1034	System Cabinet (Single Place)
2 - SH-1007	Sound Head Assembly (60 Cycle)
or	
2 - SH-1008	" " " (50 Cycle)
2 - SH-1009	Motor Assembly (60 Cycle)
or	
2 - SH-1010	" " (50 Cycle)
1 - SH-1011	Sound head Accessory Kit
1 - PU-1009	Power Unit (60 Cycle)
or	
1 - PU-1010	" " (50 Cycle)
1 - AM-1050	Cabinet Kit

Issued by
Engineering Department
Printed in U. S. A.

August 23, 1955
Issue #1

X-L SOUND SYSTEMS
VOLTAGE AND CURRENT TEST DATA

Vacuum Tube	Vacuum Tube Voltages Pin #1	Pin #2	Pin #3	Pin #4	Pin #5	Pin #6	Pin #7	Pin #8	Pin #9	Pin #10	Tube Cap	Other Voltage Data Total Plate Current
AM-1026 Amplifier (See Notes: 1 and 2)												
V1 (6SL7GT)	G2 50	P2 205	K2 90	G1 0	P1 90	K1 0.6	H 3AC	H 3AC	-	-	-	Junction R32 and L1 590V
V2 (6SL7GT)	G2 50	P2 205	K2 90	G1 0	P1 90	K1 0.6	H 3AC	H 3AC	-	-	-	Junction R25 and C7 -150V
V3 (6SN7GTA)	G2 -10	P2 300	K2 -30	G1 -10	P1 300	K1 -30	H 3AC	H 3AC	-	-	-	Junction R25 and C6 -185V
V4 (#807)	H 3AC	G2 300	G1 -30	K 0.2	H 3AC	-	-	-	-	-	585	
V5 (#807)	H 3AC	G2 300	G1 -30	K 0.2	H 3AC	-	-	-	-	-	585	Total Plate Current 140MA
V6 (VR-150)	-	K 0		-	P 150	-	-	-	-	-	-	(See Note: 5)
V7 (VR-150)	-	K 150		-	P 300	-	-	-	-	-	-	
V8 (5R4GY)	-	F 560		-	P2 720AC	-	P1 720AC	-	F 600	-	-	
V9 (5R5GY)	-	F 560		-	P2 720AC	-	P1 720AC	-	F 600	-	-	
AM-1027 AMPLIFIER (See Notes: 1 and 2)												
V1 (6SL7GT)	G2 0	P2 155	K2 0.9	G1 0	P1 155	K1 0.9	H 3AC	H 3AC	-	-	-	Junction L1 and C10 385V
V2 (6SL7GT)	G2 -10	P2 300	K2 -25	G1 -10	P1 300	K1 -25	H 3AC	H 3AC	-	-	-	Junction R25 and C7 -165V
V3 (6L6G)	-	H 3AC	P 370	G2 300	G1 -25	-	H 3AC	K 0.3	-	-	-	Junction R25 and C6 -165V
V4 (6L6G)	-	H 3AC	P 370	G2 300	G1 -25	-	H 3AC	K 0.3	-	-	-	Total Plate Current 170MA
V5 (5R4GY)	-	F 380	-	P2 490AC	-	P1 490AC	-	F 385	-	-	-	(See Note: 5)
AM-1028 PEC AMPLIFIER (See Notes: 1 and 2)												
V1 (6J7)	SH 0	H 3AC	P 52	G2 25	G3 0.9	-	H 3AC	K 0.9	-	-	-	Total Plate Current 4MA
V2 (6J7)	SH 0	H 3AC	P 160	G2 160	G3 160	-	H 3AC	K 16	-	-	-	(See Note: 6)
P1(Connector)	3AC	65	0	0	0	3AC	285	0	0	0	-	
AM-1029 MONITOR AMPLIFIER (See Notes 1 and 2)												
V1 (6SL7GT)	G2 0	P2 110	K2 0.8	G1 0	P1 110	K1 0.8	H 3AC	H 3AC	-	-	-	Total Plate Current 55MA
V2 (6L6G)	-	H 3AC	P 300	G2 260	G1 0	-	H 3AC	K 18	-	-	-	(See Note: 7)
V3 (5Y3GT)	-	F 335	-	P2 310AC	-	P1 310AC	-	F 340	-	-	-	
AM-1064 CONTROL UNIT (See Note: 1)												
V1 (12AT7)	P2 150	G2 0	K2 1.7	H2 3AC	H1 3AC	P1 120	G1 0.4	K1 0	HM 3AC	-	-	Total Plate Current 6MA
P1(Connector)	0	300	3AC	0	0	0	-	3AC	0	0	-	(See Note: 8)
AM-1065 PRE-AMPLIFIER (See Note: 1)												
V1 (#5879)	G1 0	0	K 1.5	H1 19	H2 12	0	G2 40	P 70	G3 1.5	-	-	Total Plate Current 8MA
V2 (12AT7)	P2 55	G2 0	K2 1.0	H2 12	H1 0	P1 265	G1 0	K1 3.5	-	-	-	(See Note: 9)
P1(Connector)	0	300	19	0	0	0	-	0	0	0	-	
PU-1011 POWER SUPPLY (See Note: 1)												
V1 (5Y3GT)	-	F 370	-	P2 450AC	-	P1 450AC	-	F 370	-	-	-	Terminal B+ 300V DC
V2 (5Y3GT)	-	F 370	-	P2 450AC	-	P1 450AC	-	F 370	-	-	-	

NOTES

1. All voltages are:-
   a. DC unless otherwise specified.
   b. To system ground.
   c. Taken with a 1000 ohm/volt voltmeter.
   d. With a 115 volt, 60 cycle AC power supply.
   e. With no signal.
2. The AM-1026, AM-1027 and AM-1029 Amplifier data were obtained without load.
3. The AM-1028 PEC Amplifier plate and heater supply are obtained from the AM-1026 or AM-1027 Amplifier.
4. The PU-1009 and PU-1010 Power Unit data were obtained with 4 amperes flowing to each of two exciter lamps.
5. Disconnect B1 wire from L1 and insert 0-250 MA DC meter.
6. Disconnect wire from B+ terminal on Soundhead and insert 0-10 MA DC meter.
7. Disconnect strap from V3, Pin #8 and insert 0-100 MA DC meter.
8. Disconnect strap between P1 and R3 and insert 0-10 MA DC meter.
9. Disconnect Red wire between P1 and T2, terminal 1, and insert 0-10 MA DC meter.

PU-1009, PU-1010 Power Unit (See Notes: 1 and 4)	
Junction CR1 and L1	14.VDC
Junction L1 and L2	12.5VDC
Junction L2 and C2	11.0VDC
T1 SS	17.5VAC

X-L SOUND SYSTEMS
TRANSFORMER AND REACTOR RESISTANCE-OHMS

COMPONENT	PRIMARY		SECONDARY	
	TERMINALS	OHMS	TERMINALS	OHMS
AM-1026 AMPLIFIER				
T1 (Input)	P-P	22	S-S	2230
T2 (Output)	P-P	156	0-8 0-16 0-32	0.8 1.1 1.5
T3 (Power)	C-125	1.1	5-5 6.3-6.3 HV-HV CT-BT	0.1 0.1 145 14
L1	-	60	-	-
AM-1027 AMPLIFIER				
T1 (Input)	P-P	22	S-S	2230
T2 (Output)	P-P	246	0-8 0-16	1. 1.3
T3 (Power)	C-125	2.2	5-5 6-3-6.3 HV-HV CT-BT	0.1 0.1 175 21
L1	-	100	-	-
AM-1028 PRE-AMPLIFIER				
T1 (Output)	P-P	1400	S-S	25
AM-1029 MONITOR AMPLIFIER				
T1 (Output)	P-P	440	0-4 0-8 0-16	0.6 0.8 1.1
T2 (Power)	0-125	7.3	5-5 6.3-6.3 HV-HV	0.2 0.2 360
PU-1009, PU-1010 POWER UNIT				
T1 (Power) L1 and L2	P-P -	1.1 0.2 Max.	S-S -	0.2 -

NOTES

1. All resistance measurements are to be made with all vacuum tubes removed and the cable form wires disconnected from the associated terminal strip.

1-55

INTERNATIONAL PROJECTOR CORPORATION
BLOOMFIELD, N. J.
PRINTED IN U.S.A.

1. GENERAL

The XL500 System consists of the following components:

1.1 Magnetic

2 SH-1025 Magnetic Soundheads
2 AM-211 Changeover Cabinets
1 AM-1089 System Control Cabinet
1 AM-1064 Control Unit
1 AM-1066 Cabinet
4 AM-1065 Preamplifiers
1 PU-1014 Cabinet
1 PU-1011 Power Supply
1 AM-1031 System Cabinet
3 AM-1026 or AM-1027 Power Amplifiers
1 AM-1054 Mon. Amplifier and Control Panel

1.2 Optical

2 SH-1007 Reproducers
1 AM-1028 Preamplifier (mounted in AM-1089 System Control Cabinet)
1 AM-1031 System Cabinet
1 AM-1026 or AM-1027 Power Amplifier
1 PU-1009 Power Unit

2. SH-1025 MAGNETIC SOUND MECHANISM - File reference 40.385, XL-101, Page 1, Par. 3.1

3. MAGNETIC PICKUP HEAD ADJUSTMENT - File reference 40.385, XL-432 and XL-436, Page 20, Par. B9

4. AM-1065 PREAMPLIFIER

a. Initially set each preamplifier gain control, R-10, in mid-position.

b. Terminate each of the stereophonic power amplifiers in a resistive load after disconnecting the stage speaker load.

c. Set the system selector switch on the AM-1089 system control cabinet on STEREO and the EMERGENCY switch on NORMAL.

d. Depress the button on the AM-211 Changeover Cabinet associated with the operating machine.

e. With a 1 KC test film running, connect an AC voltmeter (1,000 ohms/volt or better) across the output of the preamplifier in channel #1 and note the reading.

f. Interchange the preamplifiers in channels #1 and #2, and adjust R-10 so that the voltmeter reading is the same as in the previous paragraph.

g. Substitute the other two preamplifiers for that in channel #1 and adjust R-10 of each so that the voltmeter reading is the same.

h. Paragraph 3 above describes the adjustments required to equalize the outputs of the magnetic soundhead after the AM-1065 preamplifiers have been set for equal gain.

5. AM-1089 SYSTEM CONTROL CABINET

5.1 Stereophonic System Gain Adjustment

a. Potentiometers R7 to R12 inclusive, provide flexible adjustment of the system gain and also equalize the output of machines. Set in full clockwise position initially.

b. Set the SYSTEM VOLUME control in mid-position and adjust each potentiometer, as required, to give normal auditorium volume and the same output level from each channel and each machine.

5.2 Stereophonic System High Frequency Equalization

a. A kit of capacitors, that may be substituted for C7 to C18 inclusive, provide flexible adjustment of the high frequency response.

b. Values of these capacitors, and the strapping required, should be established per paragraph 12.

Issued by
Engineering Department
Printed in U. S. A.
May 23, 1956
Issue #1

5.3 AM-1064 Control Unit

a. This unit was accurately adjusted at the factory and under normal conditions adjustment should not be necessary. However, the performance should be checked at installation as described below.

b. Thread a mixed 1 KC and 12 KC test film in the soundhead.

c. Set the monitor selector switch on the monitor control panel in position #4.

d. Set the system selector switch on the AM-1089 system control cabinet on STEREO and the EMERGENCY switch on NORMAL.

e. Depress the button on the AM-211 changeover cabinet associated with operating machine.

f. Set R-1 (center hole on the front of the control unit) in extreme counter-clockwise position initially.

g. With the film running, rotate R-1 clockwise slowly until a clean 1 KC signal is heard in the monitor speaker.

h. Rotate R-1 1/8 turn further clockwise for final positioning.

CAUTION: Do not rotate R-1 clockwise any further than required to fulfill the above.

5.4 AM-1028 Preamplifier

a. This unit includes a gain control and low frequency equalization for optical reproduction. The following adjustments, relating to the sound mechanism, should be made first.

(1) Establish the same exciter lamp current for each machine.

(2) Adjust potentiometers R-41 and R-42 to obtain the same nominal PEC voltage for each machine. Then readjust R-41 and R-42, as necessary, to obtain the same level from each machine at the output of the preamplifier.

NOTE: For XL Sound Mechanisms, the nominal PEC voltage should be 70. measured across terminals "+" and "S GND." with a vacuum tube voltmeter. When used with Sound Mechanisms such as the Simplex Four Star which contain a PEC polarizing resistor, it should be removed.

b. Gain Adjustment - Compare the levels of the optical and stereophonic systems at the output of the center channel power amplifier. Readjust R-14, as required, so that the level of the optical system is the same as the stereophonic system. If additional gain is necessary in the optical system, change the GRN-WH wire from the -12 db terminal to the 0 db terminal and readjust R-14.

c. Low Frequency Optical Equalization - A kit of resistors and capacitors that may be substituted for R-1 and C-1 is supplied to provide flexible adjustment of the low frequency response. Establish the values per paragraph 12.

5.5 High Frequency Optical Equalization

a. A kit of resistors and capacitors, that may be substituted for R-1, C-1 to C-4, provides flexible adjustment of this response. Establish the values per paragraph 12.

5.6 Non-Synchronous Attachment Matching

a. Terminals Rx and Ry are provided for the insertion of resistors and/or capacitors to match the attachment to the input of the AM-1028 Preamplifier and to adjust the gain or frequency response.

b. Determine the output impedance, output level and frequency characteristics of the attachment.

c. Insert resistors and/or capacitors, as needed, for quality results.

5.7 Matching the Fourth Channel Output to the Input of the Auditorium Speaker Amplifier

a. Transformer T-1 is provided to match the 500 ohm output of the AM-1064 Control Unit to the input of the auditorium speaker amplifier when it is other than an AM-1026 and AM-1027. The strapping for typical power amplifiers is described below.

b. Power amplifier with a 500 ohm input, one side grounded, nominal input level -20 db/6mw.

(1) No strapping is required.

c. Simplex Four Star power amplifier and other amplifiers, that work from a 10,000 to 20,000 ohm line, one side grounded, nominal input level -20 db/6mw.

(1) Remove the wire from the slider of the AUDITORIUM VOLUME control, R6, and connect to T-1, terminal #1.

(2) Connect the slider of R6 to T-1, terminal #7.

d. Power amplifier having a nominal input level of less than -20 db/6mw.

(1) Determine the attenuation required so that normal setting of the auditorium volume control will be approximately in mid-position, select the resistors from the table and connect per the schematic below.

Attenuation db	R43 and R45 Ohms	R44 Ohms
-10	1,000	750
-20	620	2,400
-30	510	7,500
-40	510	24,000

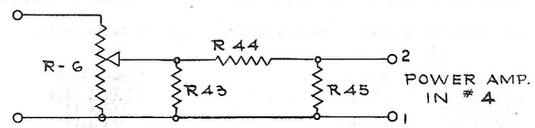

e. Balanced or Ungrounded Input

NOTE: A 500/500 ohm matching transformer (Peerless Type E-372-Q or equivalent) furnished by the customer is required.

(1) Mount this transformer in the cabinet in which the amplifier is housed.

(2) Connect one winding of this transformer to the POWER AMP IN #4 terminals in the AM-1089 System Control Cabinet and the other winding to the input of the amplifier.

6. P-3257 AUDITORIUM SPEAKER MATCHING TRANSFORMER

a. Connect to and strap the primary to match the output of the power amplifier driving the auditorium speakers per the table below.

b. Initially connect to and strap the secondary per the table below so that the power available in the line of the auditorium speakers is the rated power of the amplifier or the next higher power if the rating is in between the powers listed in the table. For example: If the rated power is 40 watts, strap for 64 watts.

Primary			Secondary			
Impedance Ohms	Connect to	Strap	Impedance Ohms	Connect to	Strap	Power in 70 Volt Line-Watts
16	7 and 12	9 to 10	625	1 and 6	3 to 4	8
12	7 and 11	9 to 10	470	1 and 5	3 to 4	11
8	8 and 11	9 to 10	312	2 and 5	3 to 4	16
4	7 and 12	7 to 10	156	1 and 6	1 to 4	32
		9 to 12			3 to 6	
2	8 and 11	8 to 10	78	2 and 5	2 to 4	64
		9 to 11			3 to 5	

c. Determine the normal volume level per paragraph 10 below and, if necessary, revise the connections to change the power available.

Issued by
Engineering Department
Printed in U. S. A.
May 23, 1956
Issue #1

7. AM-1026 OR AM-1027 POWER AMPLIFIER - File reference 40.03.

8. PU-1011 POWER UNIT - File reference 40.31 PU-1011 Power Unit, also 40.385 XL-101, Page 4, Paragraph 3.4

9. AM-1054 MONITOR AMPLIFIER AND CONTROL PANEL

9.1 Emergency Monitor Volume Control Setting

a. Adjustable resistor R1, provides pre-set monitor speaker volume when the monitor amplifier is "OFF" or has been removed and the monitor volume control is not effective.

NOTE: When the monitor amplifier is "OFF", R1 provides pre-set monitor volume automatically.

b. Turn monitor amplifier AC switch "OFF".

c. Disconnect wires from "SPKR" and "15 Ohm" terminals.

d. Strap "SPKR" and "15 Ohm" terminals.

e. Adjust R1 satisfactory monitor volume with main System Volume Control at normal setting.

10. LU-150 AND LU-151 AUDITORIUM SPEAKERS

a. Determine the normal number of watts per speaker by dividing the wattage rating of the power amplifier driving the Auditorium Speakers by the number of speakers.

b. Initially strap the primary of each transformer per the table below.

Primary Impedance	Connect to	Strap	Power From 70 Volt Line
10,000 ohms	1 - 6	3 to 4	1/2 Watt
7,500 ohms	1 - 5	3 to 4	2/3 Watt
5,000 ohms	2 - 5	3 to 4	1 Watt
2,500 ohms	1 - 6	1 to 4 & 3 to 6	2 Watts
1,250 ohms	2 - 5	2 to 4 & 3 to 5	4 Watts

c. Normal auditorium speaker volume should be obtained with the AUDITORIUM VOLUME control in the AM-1089 System Control Cabinet in mid-position. If the setting is near either end, changes in the strapping of the secondary of the P-3257 matching transformer (Paragraph 6) and of the matching transformer in each auditorium speaker may be necessary.

d. In some instances, it may be necessary to change the primary strapping of some auditorium speaker transformers to reduce the level of individual speakers.

e. LU-150 Matching Transformer Strapping - Strap secondary terminals 9 and 10 and connect terminals 8 and 11 (8 ohms impedance) to the voice coil of the speaker.

f. LU-151 Matching Transformer Strapping - Connect secondary terminals S1 and S2 (8 ohms impedance) to the voice coil of the speaker.

11. STAGE SPEAKER EQUIPMENT - File reference 40.385 XL-432, Page 28, Paragraph K.

12. SYSTEM FREQUENCY RESPONSE

a. After electrical and acoustic phasing have been completed, further listening tests should be made as a preliminary to adjustment of the system frequency response.

b. Selection of the frequency response that will give the highest quality sound reproduction in the auditorium is of extreme importance. The acoustic characteristics of auditoriums vary widely. Careful listening tests should be made and the response changed as necessary.

c. Optical and magnetic high frequency response adjustments are made in the AM-1089 system control cabinet by strapping and selection of resistors and capacitors. (File reference 40.15). Optical low frequency response adjustments are made in the AM-1028 preamplifier. (See X-L Installation Manual).

d. The frequency response of each of the three stereophonic channels should be the same.

13. UPPER AND LOWER MAGAZINE MODIFICATIONS - File reference 40.385, XL-432 and XL-436, Pages 10-12, Paragraph M.

14. XL OR FOUR STAR SOUND MECHANISM MODIFICATION - File reference 40.385, XL-432 and XL-436, Pages 12-13, Paragraph N.

15. XL PROJECTOR MECHANISM MODIFICATION - File reference 40.385, XL-432 and XL-436, Pages 13-18, Paragraph O.

ASSOCIATED DRAWINGS

Schematic	Wiring Diagram		
W-1172	W-1171	AM-211	Four Channel Changeover Cabinet
WD-1085	WE-1094	AM-1026	Power Amplifier
WD-1086	WE-1092	AM-1027	Power Amplifier
W-1126	W-1125	AM-1054	Monitor Amplifier and Control Panel
	G-2289	AM-1055	System Cabinet Kit
W-1142	G-2353	AM-1062	Monitor Panel and Cabinet Kit
W-1156	W-1157	AM-1064	Control Unit
W-1150	W-1155	AM-1065	Pre-Amplifier
	G-2401	AM-1066	Pre-Amplifier Cabinet
W-1215	W-1214	AM-1089	System Control Cabinet
W-1153	W-1152	PU-1011	Pre-Amplifier Power Supply
	G-2386	PU-1012	Pre-Amplifier Power Supply Cabinet
	W-1216	XL-532-536	Sound System
I-2311		AM-1089	Simplified Block Schematic
IN-130		AM-1089	Stereo HF Adjustments
IN-131		AM-1089	Optical HF Adjustments

ALTEC SERVICE CORPORATION
SIMPLEX
SOUND EQUIPMENT BULLETIN

EQUIPMENT INSTRUCTIONS - PICKUP ELIMINATION PARTS

AM-2168 (A-15 TYPE SYSTEM)
AM-2169 (A-30,B-30 TYPE SYSTEM)
AM-2170 (B-60,C-60 TYPE SYSTEM)
AM-2171 (THIRD PROJECTOR)

1. DESCRIPTION

A. Use. In A-15, B-30, B-60 and C-60 Type systems to reduce extraneous pickup. A 16 M.H. reactor is connected in the input circuit of both Volume Control Amplifiers. In each Amplifier, the 5000 ohm fixed cathode resistor is bypassed, with a .0005 MFD capacitor. In the AM-2069 N.S.-ANN. Switching Attachment, 2.5 M.H. reactors are placed in the "Mic." and "N.S." input circuits. A 2.5 M.H. reactor is added in each AM-1001 input. In the network, a series reactor and a .1 MFD capacitor in shunt are connected in the input circuit. Gain and frequency characteristics remain the same.

B. List of Parts.

Part Number	Description	Number Required: Two Projector Systems AM-2168	AM-2169	AM-2170	Third Projector AM-2171
AM-2172	Reactor Assembly	1	1	1	-
SN-512	Capacitor, .0005 MFD	2	4	4	2
SN-611	Terminal Strip	1	2	4	-
SN-674	Nut, #6-32	2	2	2	1
SN-683	Nut, #8-32	1	1	1	-
SN-684	Lockwasher, #1106	2	2	2	2
SN-685	Lockwasher, #1108	1	1	1	-
SN-952	Screw, #8-32 x 1¾	1	1	1	-
SN-956	Screw, #6-32 x ½ R.H.I.M.	2	2	2	1
SN-1035	Capacitor, .1 MFD	1	1	1	-
SN-1500	Reactor, 16 M.H.	2	2	2	1
SN-1503	Screw, Brass, #4-40 x 1"	2	2	2	1
SN-1506	Reactor, 2.5 M.H.	3	4	6	-
SN-1523	Lockwasher, #1104	4	4	4	1
SN-1525	Spacer	1	1	1	-
SN-1526	Mounting Plate	2	2	2	1
OA-415	Nut, Brass, #4-40	4	4	4	1

Issued by
Engineering Department
Printed in U.S.A.

December 13, 1948
Issue #2

(3) Connect SN-1035 Capacitor from other terminal of reactor to terminal of VS-1 to which Wh-Yel or Blk wires are connected.

(4) Strap same terminal of reactor, (3) above, to P-1 terminal, to which Wh-Bl or Bl wire is connected.

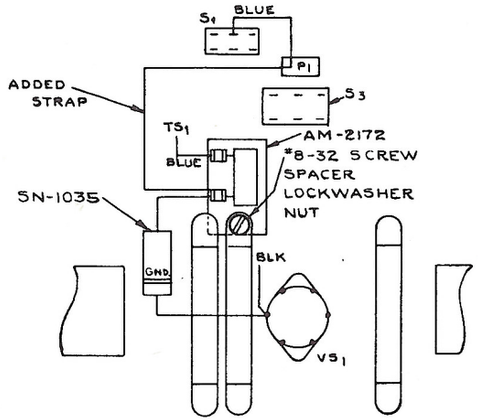

FIGURE #5

EQUIPMENT INSTRUCTION - AM-2173 PICKUP ELIMINATION PARTS "E" SYSTEM

1. DESCRIPTION.

A. Use. To reduce extraneous pickup in Type "E" Systems. A 16 M.H. reactor is placed in the input circuit of the AM-141 Amplifier and the first tube cathode resistor is bypassed with .02 and 10 MFD. Capacitors. In the second stage, the cathode resistor is increased and tapped for the grid return. High frequency equalization is obtained by bypassing the total cathode resistance. The same gain, frequency, and equalization characteristics are obtained with this revised circuit. A 2.5 M.H. reactor is placed in the AM-142 Amplifier input circuit, and a series reactor and shunt condenser (.1 MF) in the output circuit.

B. List of Parts.

1 - AM-2172	Reactor Assembly	1 - SN-1130	Resistor, 2,000 ohms, 1 watt, WW
1 - SN-540	Resistor, 25,000 ohms, ½ watt	1 - SN-1500	Reactor, 16 M.H.
1 - SN-611	Terminal Strip	1 - SN-1503	Screws, Brass 4-40
2 - SN-674	Nuts, 6-32	1 - SN-1506	Reactor, 2.5 M.H.
2 - SN-684	Lockwashers, #1106	1 - SN-1523	Lockwasher, #1104.
1 - SN-688	Resistor, 50,000 ohms, ½ watt	1 - SN-1524	Screw, 10-32 x 1½"
1 - SN-769	Resistor, 3,000 ohms, 1 watt WW	1 - SN-1525	Spacer, 1" x 1/4" ID
2 - SN-788	Capacitors, .01 MFD - 600 V.	1 - SN-1526	Mounting Plate
2 - SN-956	Screws, 6-32 x 1/4"	2 - OA-415	Nuts, Brass 4-40
1 - SN-1035	Capacitor, .1 MFD, 400 V.		

2. INSTALLATION.

A. Reactor in AM-141 Input Circuit (WD-158 and Figure #1).

(1) Remove rivet holding TS_1.

(2) Fasten SN-1526 Mounting Plate and TS_1 to chassis with one #6-32 x 1/4" R.H.I.M.S., nut and lockwasher supplied.

(3) Mount SN-1500 Reactor on SN-1526, using a #4-40 x 1" R.H. Brass M.S. and nut.

(4) Disconnect VS_1 grid lead and R_2 at J_1 and connect to one terminal of reactor.

(5) Strap J_1 terminal (from which grid lead and R_2 were removed) to other terminal of reactor.

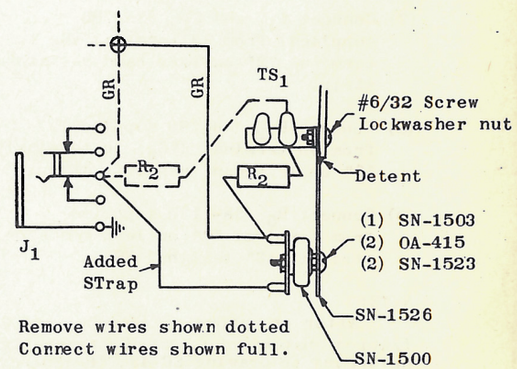

Remove wires shown dotted
Connect wires shown full.

FIGURE 1.

Issued by
Engineering Department
Printed in U.S.A.

October 29, 1945
Issue #1

B. Changes in VT_1 Circuit of AM-141 (WD-158 and Figure 2.)

(1) Connect C_2 and C_3 to cathode and suppressor terminal VT_1.

(2) Disconnect brown wire from VT_2 cathode, remove from cable, and connect to cathode and suppressor VT_1.

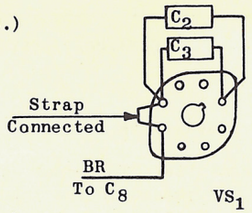

FIGURE 2.

C. Changes in VT_2 Circuit of AM-141 (WD-158 and Figure 3.)

(1) Remove resistors R_7, R_8, and R_5.

(2) Remove straps from terminals "1" to "4" on left hand resistor mounting strips.

(3) Connect strap from R_6 to R_9.

(4) Replace R_7 (SN-540 supplied.) Connect right side to same terminal and left side to R_6, leaving terminal "2" vacant.

(5) Replace R_8 (SN-688 supplied.) Connect right side to same terminal and left side to R_9, leaving terminal "3" vacant.

(6) Disconnect black wire to P_1 from SH terminal (VS_2) and connect to terminal "3" on left hand resistor strip.

(7) Connect C_{11} and C_{12} (SN-788 supplied) from SH terminal VS_2 to terminal "2" on left hand resistor strip.

(8) Connect R_{12} (SN-769 supplied) from SH terminal (VS_2) to terminal "3" on left hand resistor strip.

(9) Connect R_5 (SN-1130 supplied) from terminal "3" on left resistor strip to "C" terminal VS_2.

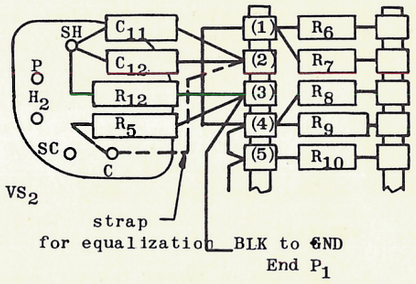

FIGURE 3.

NOTE:

After the above changes C_{11} and C_{12} are used for high frequency equalization instead of C_2 and C_3 as specified in the Tuning-Up Instructions. Referring to drawing SC-43, "Frequency Response characteristics with AM-141 and AM-142", the upper set of curves will be obtained by adjustment of the warping circuit with C_{11} and C_{12} strapped to VS_2 cathode. The lower set of curves will be obtained by adjustment of the warping circuit with this strap omitted.

D. Mounting Reactor in AM-142 Input Circuit (WD-159 and Figure 4.)

(1) Remove shielded input cable from R_{11}.

(2) Remove rivet from lower right hand resistor strip and mount an SN-611 terminal strip on chassis using a 6-32 x 1/4" R.H.M.I.S., lockwasher and nut supplied.

(3) Connect input cable to top lug of SN-611.

(4) Connect a 2.5 M.H. reactor (SN-1506) between top lug of SN-611 and "G" terminal of VS_1.

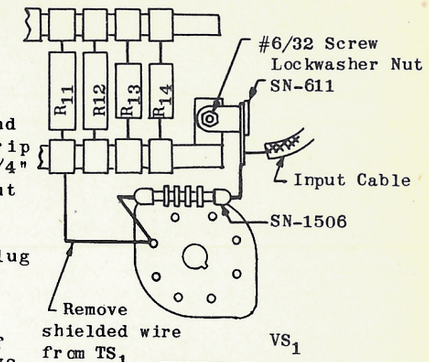

FIGURE 4.

E. Reactor in AM-142 Output Circuit (WD-159 and Figure 5).

(1) Remove screw from lower left hand side of T_1 (output transformer).

(2) Mount AM-2172 Reactor using a #10-32 x 1½" R.H.I.M.S. spacer, lockwasher, and the tapped hole from which screw was removed in (1) above.

(3) At T_1, remove blue wire (other end connected to TS_1 output) and connect to one terminal of reactor.

(4) Connect an SN-1035 Capacitor (.1 MF) from same terminal of reactor to T_3 (junction of R_{15} and black wire to R_{17}).

(5) Strap other terminal of reactor to T_1 (24 ohm terminal).

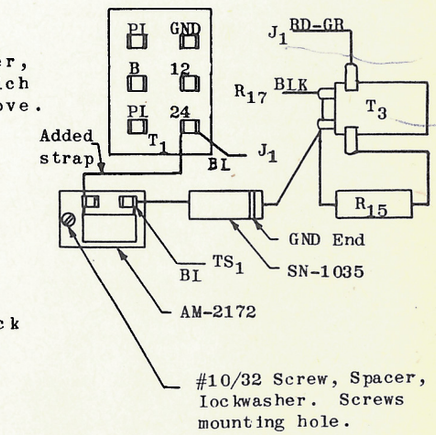

FIGURE 5.

ALTEC SERVICE CORPORATION

SIMPLEX SOUND SYSTEMS

EQUIPMENT INSTRUCTIONS - MODIFICATION AND NOISE PICKUP REDUCTION PARTS FOR SYSTEMS HAVING AM-170 N. S. AMPLIFIER -

AM-2174	A-15 SYSTEM
AM-2175	A-30, B-30 SYSTEM
AM-2176	B-60, C-60 SYSTEM

DESCRIPTION.

A. Use. AM-2174, AM-2175, AM-2176, parts are used in systems having an AM-170 N.S. Amplifier, to reduce extraneous pickup and maintain constant AM-1001 input impedence. In each AM-1001, a reactor is placed in the input circuit and the value of the VT_1 grid resistor is changed according to the type system. A series reactor and a capacitor in shunt are connected in the input of the network. Gain and frequency characteristics remain the same.

B. List of Parts.

Part Number	Description	NUMBER REQUIRED AM-2174	AM-2175	AM-2176
AM-2172	Reactor Assembly	1	1	1
SN-517	Resistor, 2 Meg.			4
SN-683	Nut, 8-32	1	1	1
SN-685	Lockwasher, #1108	1	1	1
SN-952	Screw, 8-32 x 1-3/4" R.H.I.M.	1	1	1
SN-1035	Capacitor, .1 MFD	1	1	1
SN-1478	Resistor, 1 Meg.		2	
SN-1506	Resistor, 2.5 M.H.	1	2	4
SN-1525	Spacer	1	1	1

INSTALLATION.

A. Change in each AM-1001 (WD-113 and Figure #1)

(1) Remove C_1 and C_2 in each AM-1001 Amplifier.

(2) Mount SN-1506 Reactor in place of C_1 and C_2.

(3) Remove R_1 in A-30, B-30, B-60, C-60 Systems and replace with value in following table:

Number of AM-1001 in Parallel	Type System	Value of Grid Resistor (R_1) VT_1 AM-1001
1	A-15	.5 Meg (Std)
2	A-30, B-30	1 Meg (SN-1478)
4	B-60, C-60	2 Meg (SN-517)

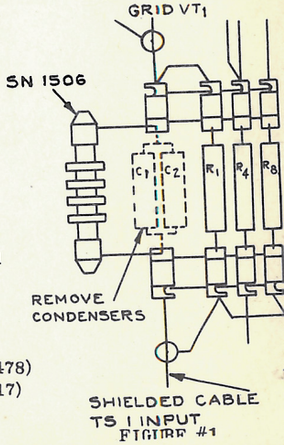

FIGURE #1

Issued by
Engineering Department
Printed in U.S.A.

October 29, 19
Issue

B. Reactor in Network (Figure #2)

(1) Mount reactor assembly below chassis by means of 8-32 x 1-3/4" R.H.I.M. screw and spacer using hole in chassis slightly above and to the left of socket VS_1.

(2) Wiring change:

a. LU-1003-X (WD-200), LU-1026 (WD-124). At S_1, remove blue wire (other end connects to TS_1, input) and connect to one of the reactor terminals.
b. LU-1002 (WD-116), LU-1003 (WD-117). At J_1, remove blue wire (other end connects to TS_1 input) and connect to one of the reactor terminals.

(3) Connect SN-1035 Capacitor from other terminal of reactor to terminal of VS_1 to which black wires are connected (Gnd).

(4) Strap same terminal of reactor, (3) above, to P_1 terminal, to which blue wire is connected.

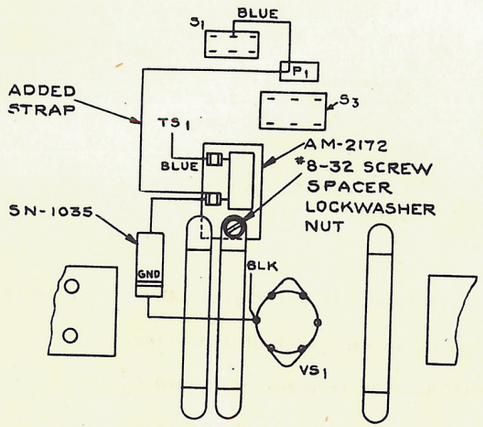

FIGURE #2

WD-109

ISSUE: 1 5-18-38

TWO PROJECTORS

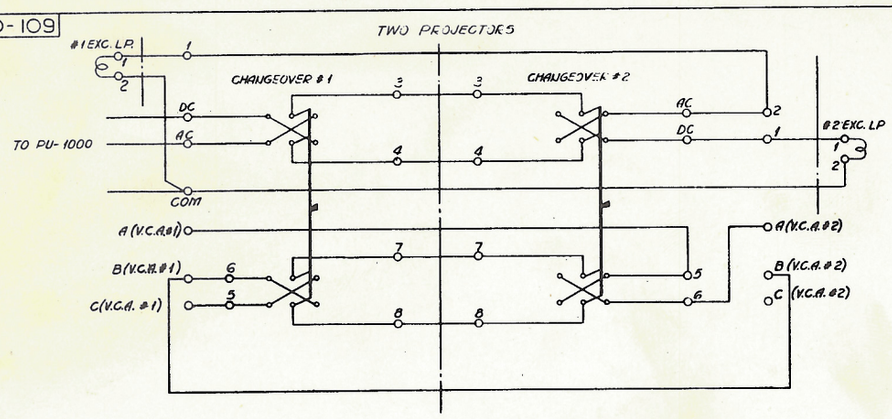

THREE PROJECTORS

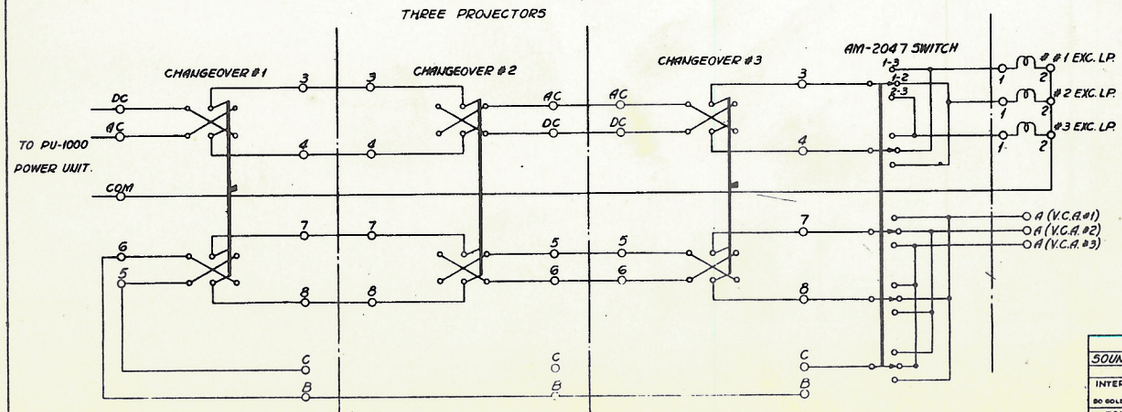

ASSOCIATED ITEMS

CHANGEOVER
SOUND AND EXCITER LAMP
SCHEMATIC

INTERNATIONAL PROJECTOR CORPORATION
80 GOLD STREET NEW YORK

DR E.E. Myers C.F.A.
APPD.

WD-109

Printed in U.S.A.

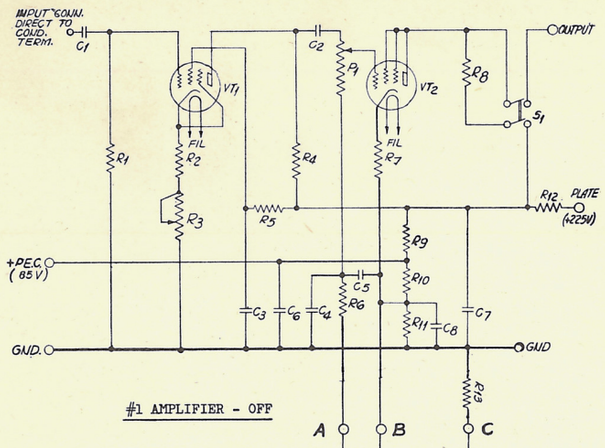

#1 AMPLIFIER - OFF

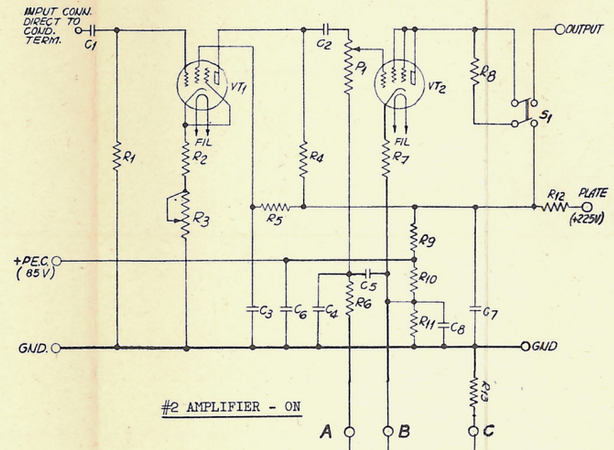

#2 AMPLIFIER - ON

NOTE:

1 - As shown in this schematic, both changeover switches to the right or to the left make #1 film amplifier inoperative and #2 film amplifier operative.

2 - Circuit Conditions.
(a) Both switches to the right or left.
A & C of #1 film amplifier shorted.
A & B of #2 film amplifier shorted.
#1 film amplifier inoperative.
#2 film amplifier operative.

(b) Either switch to left and the other switch to right.
A & B of #1 film amplifier shorted.
A of #2 film amplifier and C of #1 film amplifier shorted.
#1 film amplifier operative.
#2 film amplifier inoperative.

3 - To test an individual film amplifier, disconnect leads going to terminals A, B, & C of this amplifier and place jumper across A & B after opening plate switch on other film amplifier.

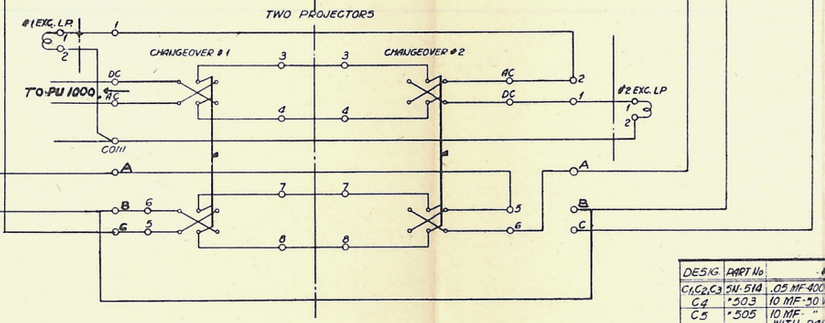

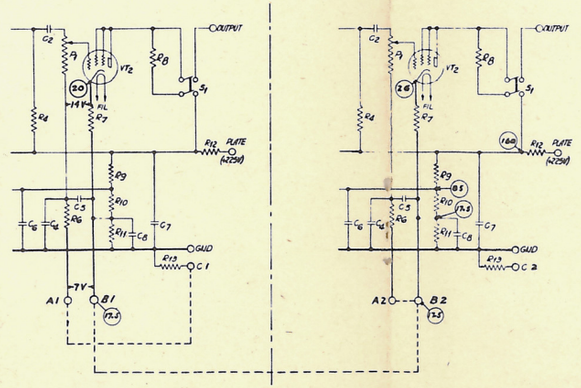

FUNDAMENTAL CHANGEOVER CIRCUIT SHOWING VOLTAGES INDICATED (SEE NOTE)

DESIG.	PART No.	REPLACEMENTS
C1,C2,C3	SN-514	.05 MF-400V CAP. AEROVOX TYPE 2EM
C4	*503	10 MF-30 V " " " EM
C5	*505	10 MF " " " 2EM WITH PAPER TUBE
C6,C7 C8	*506	8-8-10 MF AEROVOX TYPE 3E 25 V 450 V
R1	*539	500,000Ω-1 WATT ECS LRC TYPE BT-1
R2	*531	5,000Ω-½ WATT " " " BT-½
R3	*532	5,000Ω-10 WATT " " " AB-A
R4	*538	200,000Ω-½ WATT " " " BT-½
R5	*537	2 MEG - " " " " "
R6,R7	*530	6,000Ω - " " " " "
R8	*540	25,000Ω - " " " " "
R9	*522	70,000Ω-1 WATT " " " BT-1
R10	*523	55,000Ω - " " " " "
R11	*689	15,000Ω - " " " " "
R12	*527	25,000Ω - " " " " "
R13	*688	50,000Ω-½ WATT " " " BT-½
P1	*541	500,000Ω 20-2 DB STEPS POT.
VT1	" 792	6U7 METAL VACUUM TUBE(6J5 STOCK)
VT2	" 707	6U7 METAL VACUUM TUBE
S1	" 608	D.P.S.T. SWITCH

NOTE:

Numbers shown in ( ) refer to nominal voltages to ground as read on TA-4147 Test Meter (uncorrected for bridging effect of meter) with nominal tubes and line voltage nominal.

SIMPLEX FOUR STAR SOUND SYSTEMS
COMPOSITE SCHEMATIC
OF AM-1000 VOLUME CONTROL AMPLIFIERS
AND CHANGEOVER SWITCHES

ALTEC SERVICE CORPORATION
NEW YORK

AR-1125

DRAWN BY W.W.S. DATE 10-18-40

APP'D DATE

APP'D W.W.S. ISSUE 1 10-18-40

1. SUBJECT - Replacement changeover switch for the Simplex AM-2065 and AM-2245 used in the AM-101 Volume Control Cabinet.

2. GENERAL - When our present stock of AM-2065 and AM-2245 Switches is depleted, the AP-1992 Switch will be furnished for use as the changeover switch in the Simplex AM-101 Volume Control Cabinets

2.1 The AP-1992 Switch consists of a Mossman 4202 Extra Heavy Duty Lever Switch complete with escutcheon plate and mounted on an AP-1993 Mounting Plate.

3. INSTALLATION.

(a) Disconnect cable form wiring and remove old switch assembly and mounting plate.

(b) Mount new AP-1992 Switch; strap, and connect cable form as shown on Drawing AP-1992.

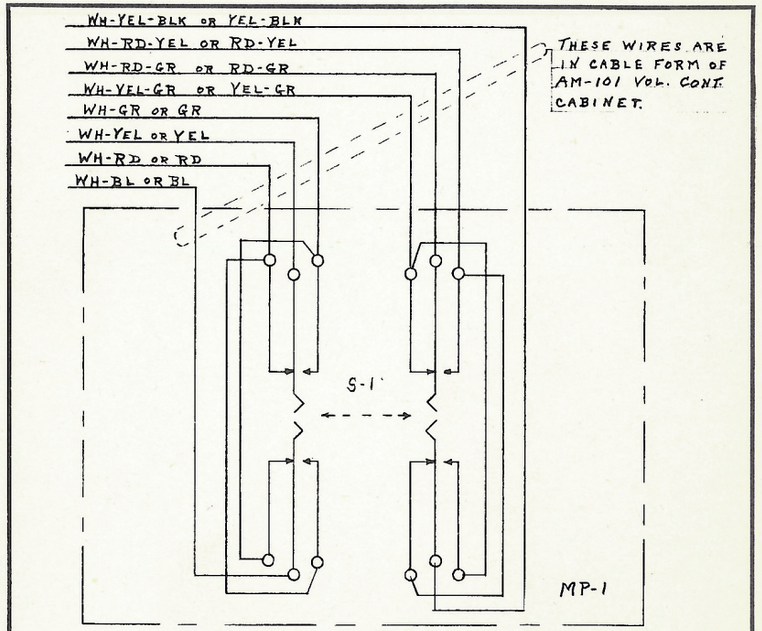

PARTS LIST	
S-1	MOSSMAN 4202-2 POS.-EXTRA HEAVY DUTY SWITCH WITH ESCUTCHEON PLATE. POS.1-LOCKING-LEFT IC-RIGHT IC POS 2-LOCKING-LEFT IC-RIGHT IC
MP-1	AP-1993 MTG. PLATE

ISSUE 1 2-24-48 APP'D		CHANGEOVER SWITCH WIRING DIAGRAM FOR SIMPLEX SOUND SYS.
	DRAWN DATE 2-24-48	ALTEC SERVICE CORPORATION NEW YORK
	APP'D DATE 2-24-48	AP-1992

Issued by
Engineering Department
Printed in U. S. A.

March 24, 1948
Issue #1

SOUND EQUIPMENT BULLETIN
SIMPLEX AM-2013 SWITCH

1. DESCRIPTION

Type - Three-position amplifier selector switch assembled on bracket with cable for interconnections and terminal strip for external connections.
Use - For emergency switching when 2 or more AM-1001 Amplifiers operate in parallel.
Settings
Mid Position - All system amplifiers in parallel.
Left Position - Amp. #1 or Amp. #1 and #3 operate. Amp. #2 or Amp.#2 and #4 are disconnected.
Right Position- Amp. #2 or Amp. #2 and #4 operate. Amp. #1 or Amp.#1 and #3 are disconnected.
Accessories - Dial plate and knob.
Dimensions - 4-1/4" high x 2-1/2" wide x 9" deep.
Weight - 2 lbs.
Associated Dwg. - WD-111.

2. INSTALLATION

The AM-2013 should be installed in the bottom of the AM-2023 Cabinet in place of the center apparatus blank per the sketch below, and connections made per the system wiring diagram.

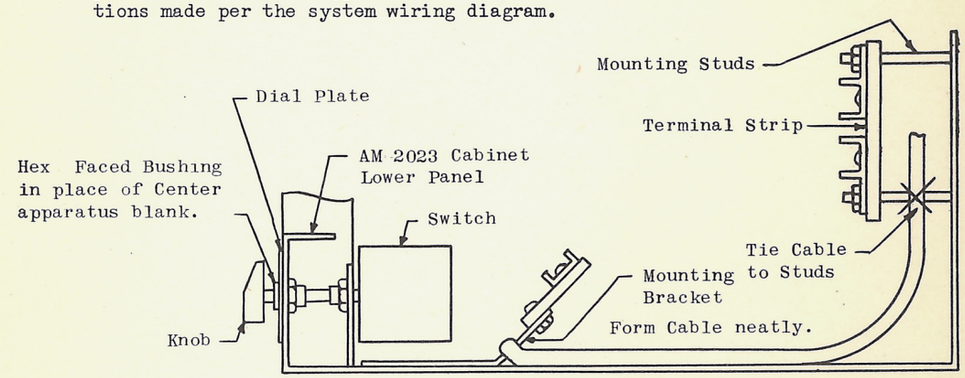

A. Grounding of Shielded Wires. The shields of the five shielded wires are bonded together at the switch, but are not grounded. To avoid loop grounds and noise, the shields should be grounded, during installation, only at the amplifier to which the cold water pipe ground wire is connected.

3. OPERATION

A. Normal. Set switch "1-2" (mid) position.

B. Emergency. If #1 (or #3) Amplifier fails, set switch in position "2" (right). If #2 (or #4) Amplifier fails, set switch in position "1" (left).

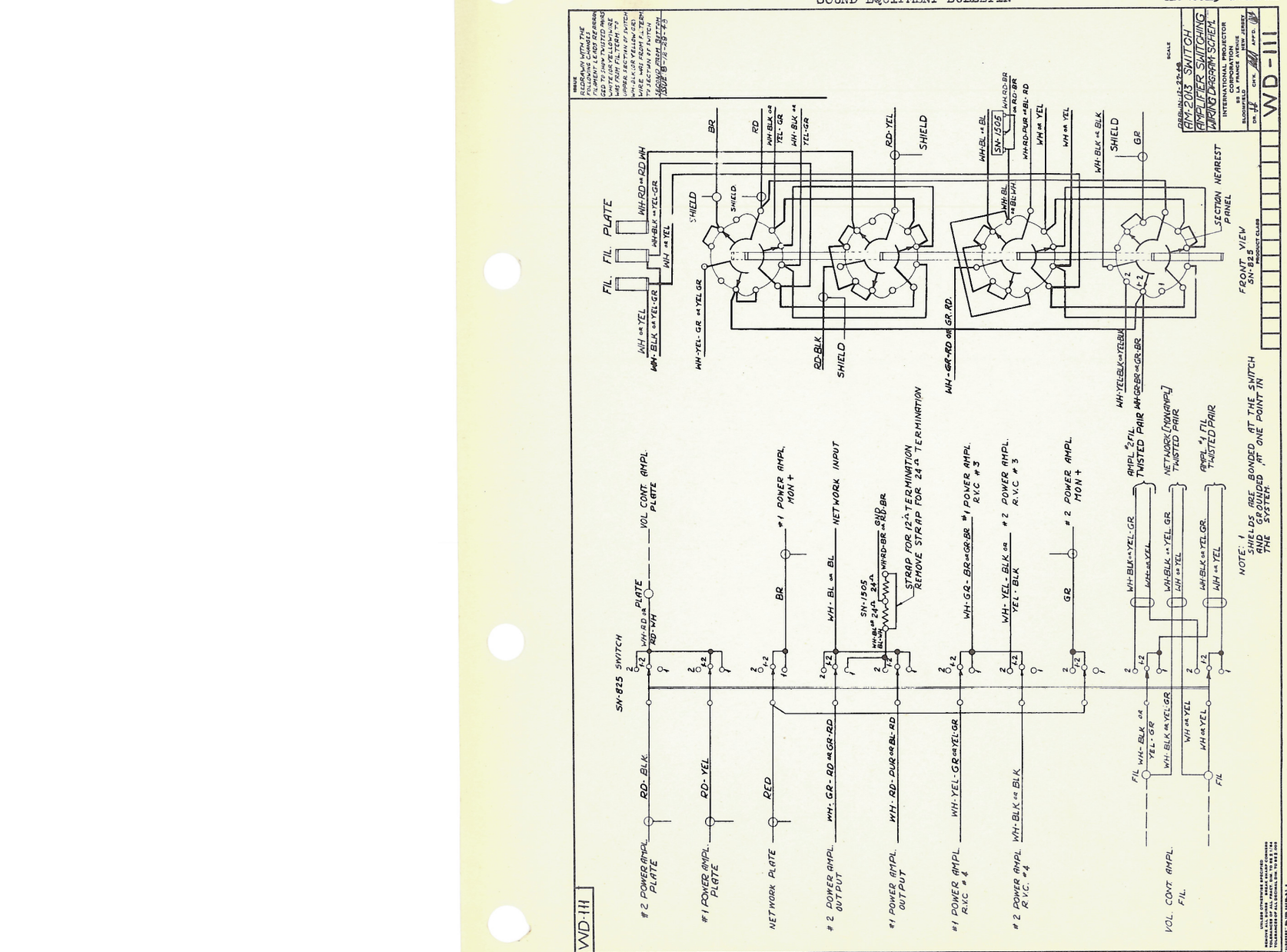
WD-111
AM-2013 SWITCH
AMPLIFIER SWITCHING
WIRING DIAGRAM SCHEM.
FRONT VIEW
SN-825
SECTION NEAREST PANEL
SN-825 SWITCH
#2 POWER AMPL. PLATE
#1 POWER AMPL. PLATE
NETWORK PLATE
#2 POWER AMPL. OUTPUT
#1 POWER AMPL. OUTPUT
#1 POWER AMPL. R.V.C. #4
#2 POWER AMPL. R.V.C. #4
VOL. CONT. AMPL. FIL.
VOL CONT. AMPL. PLATE
#1 POWER AMPL. MON +
NETWORK INPUT
#1 POWER AMPL. R.V.C. #3
#2 POWER AMPL. R.V.C. #3
#2 POWER AMPL. MON +
AMPL. #2 FIL. TWISTED PAIR
NETWORK (MONAMPL) TWISTED PAIR
AMPL. #1 FIL. TWISTED PAIR
SN-1505
STRAP FOR 12-A TERMINATION
REMOVE STRAP FOR 24-A TERMINATION
NOTE: SHIELDS ARE BONDED AT THE SWITCH AND GROUNDED AT ONE POINT IN THE SYSTEM.

WD-129

ISSUE:1 12-5-58
4 WAS 3, 3 WAS 4,
7 WAS C, 8 WAS 7,
C WAS 0, 5 WAS 9,
9 WAS 8, 8 WAS 3
WJW | CRH
ISSUE:2 6-22-64

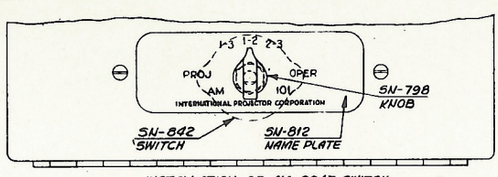

INSTALLATION OF AM-2047 SWITCH
IN AM-101 VOLUME CONTROL AMPLIFIER

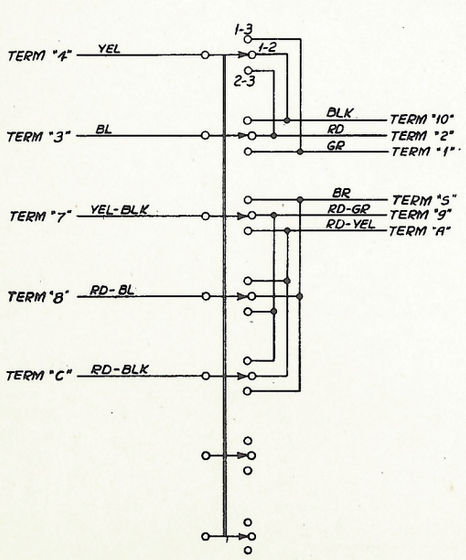

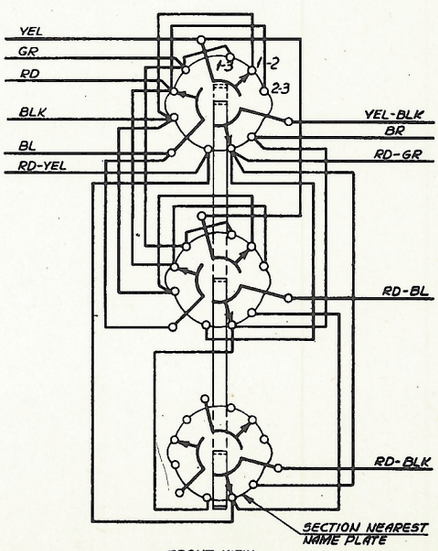

FRONT VIEW

AM-2047 SWITCH
3 RD PROJECTOR
SCHEMATIC & WIRING DIAGRAM
INTERNATIONAL PROJECTOR CORPORATION
80 GOLD STREET NEW YORK
DR E&M CHK C FA APVD
WD-129

Printed in U.S.A.

Issue #2

ALTEC SERVICE CORPORATION

SIMPLEX

AM-2047 Switch

No. 41

1. DESCRIPTION

Type - Two-position amplifier selector switch assembled on bracket with cable for interconnections and terminal strip for external connections.

Use - For emergency switching of AM-1001 Amplifiers.

Settings

Left - Regular amplifier connected - output, external heater, plate circuits and "warping" circuit of emergency amplifier disconnected.

Right - Emergency amplifier connected and same circuit of regular amplifier disconnected. Input is not disconnected, allowing for testing and servicing while sound system is in operation.

Accessories - Dial plate and knob.
Dimensions - 3-1/4" high x 2-1/2" wide x 9" deep.
Weight - 2 lbs.
Associated Dwg. - WD-110 Schematic & Wiring.

2. INSTALLATION

The AM-2049 should be installed in the bottom of the AM-2023 Cabinet in place of the center apparatus blank per the sketch below, and connections made per the system wiring diagram.

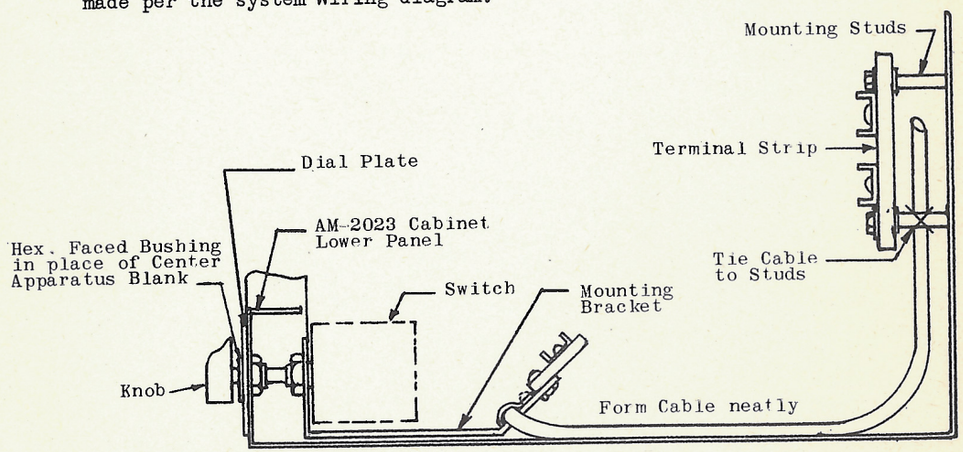

A. Grounding of Shielded Wires. The shields of the five shielded wires are bonded together at the switch, but are not grounded. To avoid loop grounds and noise, the shields should be grounded, during installation, only at the amplifier to which the cold water pipe ground wire is connected.

3. OPERATION

A. Normal. Set switch in "Reg." (left) position.

B. Emergency. Set switch in "Emerg." (right) position.

Simplex AM-2049 Switch

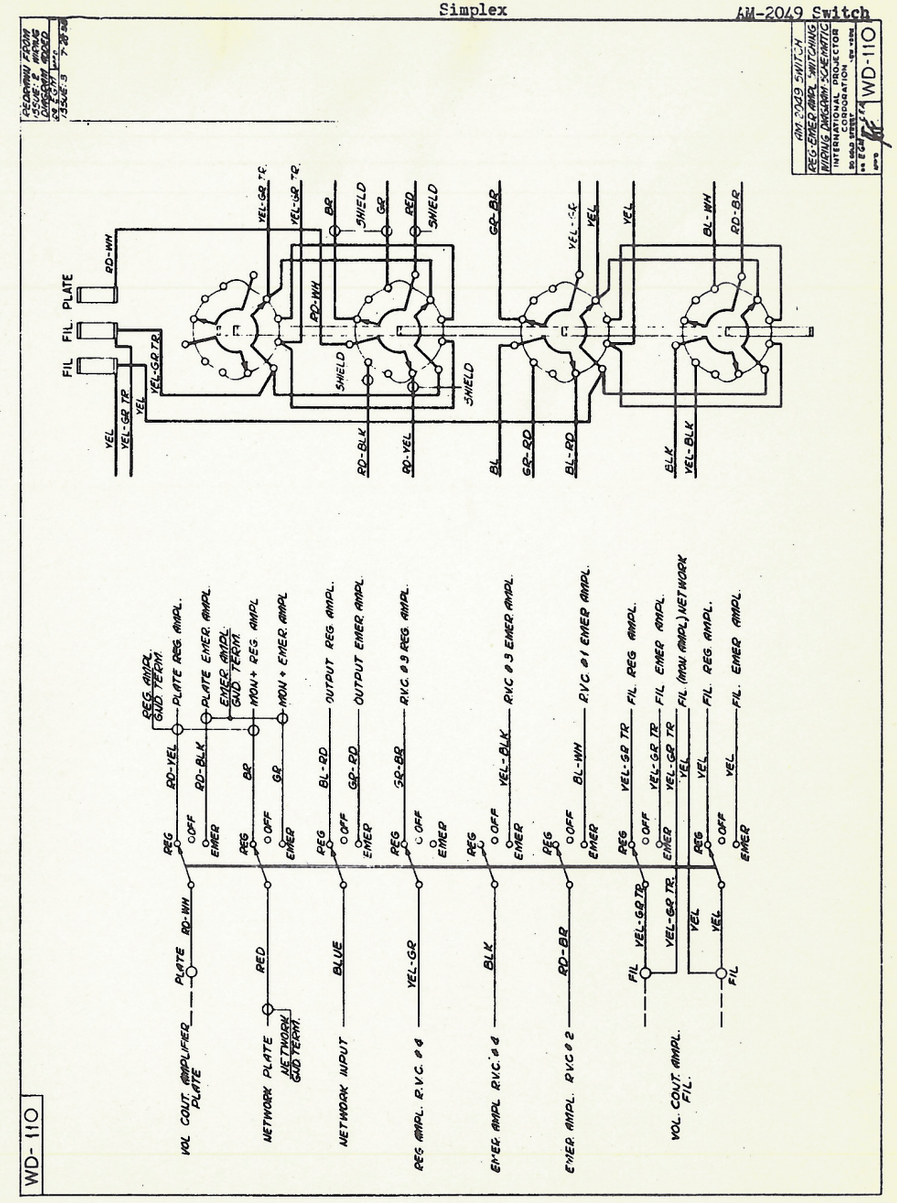

WD-122

ISSUE:-1 6-10-58

LEGEND:-

MICROPHONE CABLE, SHIELDED

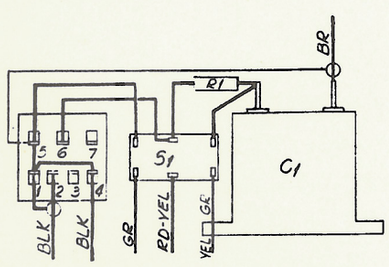

DESIG	PART No	APPARATUS
C1	SN-991	1 MF - 200 V. CAP. AEROVOX TYPE 250
R1	* 864	1/2 MEG - 1/2 WATT RES I.R.C. TYPE BT 1/2
T1	* 890	500 : 50,000 TRANSF. FERRANTI #C-201
S1	* 565	D.P.D.T. SWITCH

NOTE:-

1- THE AM-2053 N.S. SWITCHING ATTACHMENT IS INSTALLED IN AM-101 VOLUME CONTROL AMPLIFIER #1 IN PLACE OF THE NAMEPLATE AT THE BOTTOM OF THE CABINET AND CONNECTIONS MADE TO THE TERMINAL STRIPS IN THE CABINET. THE STRAP BETWEEN TERMINALS "B" & #6 SHOULD BE REMOVED.

2- ON T_1 CONNECTIONS TO TERMINALS #2 AND #4 ARE FOR 500Ω N.S. INPUT. FOR 200Ω INPUT CONNECT TO TERMINALS #3 AND #4.

LEGEND:-

= TWISTED PAIR SHIELDED CABLE. GROUND SHIELD ONLY AT VOLUME CONTROL AMPLIFIER.

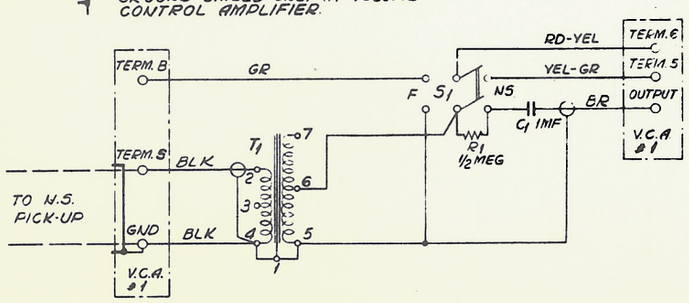

AM-2053
N.S. SWITCHING ATTACHMENT
WIRING DIAGRAM - SCHEMATIC
INTERNATIONAL PROJECTOR CORPORATION
90 GOLD STREET NEW YORK
DR. EGNICHK C.F.A. APVD FD WD-122

ALTEC SERVICE CORP.
Simplex
AM-2053 Switch
40.41

WD-122

ISSUE:-1 6-10-58

LEGEND:-
MICROPHONIE CABLE, SHIELDED

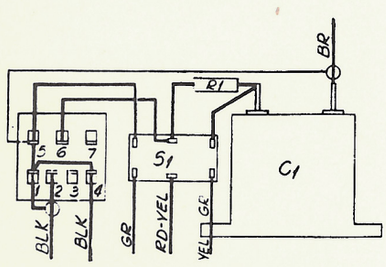

DESIG	PART No	APPARATUS
C1	SN-891	1 MF - 200 V. CAP. AEROVOX TYPE 250
R1	* 864	1/2 MEG - 1/2 WATT RES. I.R.C. TYPE BT 1/2
T1	* 890	500 : 50,000 TRANSF. FERRANTI #C-201
S1	* 565	D.P.D.T. SWITCH

NOTE:-
1- THE AM-2053 N.S. SWITCHING ATTACHMENT IS INSTALLED IN AM-101 VOLUME CONTROL AMPLIFIER # 1 IN PLACE OF THE NAMEPLATE AT THE BOTTOM OF THE CABINET AND CONNECTIONS MADE TO THE TERMINAL STRIPS IN THE CABINET. THE STRAP BETWEEN TERMINALS "B" & #G SHOULD BE REMOVED.

2- ON T1 CONNECTIONS TO TERMINALS # 2 AND # 4 ARE FOR 500Ω N.S. INPUT. FOR 200Ω INPUT CONNECT TO TERMINALS # 3 AND #4.

LEGEND:-
= TWISTED PAIR SHIELDED CABLE. GROUND SHIELD ONLY AT VOLUME CONTROL AMPLIFIER.

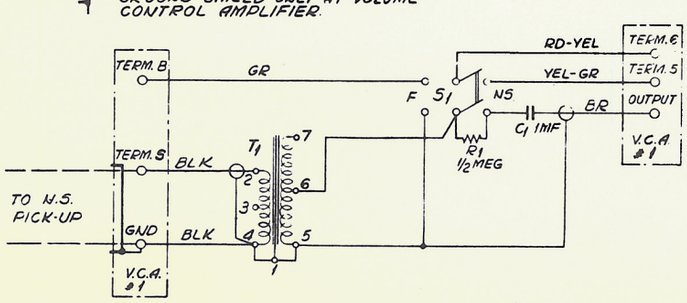

AM-2053
N.S. SWITCHING ATTACHMENT
WIRING DIAGRAM - SCHEMATIC
INTERNATIONAL PROJECTOR CORPORATION
90 GOLD STREET NEW YORK
DR. EGMAN C.F.A. APPD FD WD-122

1. DESCRIPTION

Type	- Three-position special input selector switch assembled on bracket terminal strips for external connections.
Use	- For selective switching of three inputs - Film, Microphone, or Phonograph.
Settings	
Middle	- Film
Right	- Phonograph
Left	- Microphone
Accessories	- Dial plate and knob.
Dimensions	- 3-1/4" high x 7" wide x 9" deep.
Associated Dwg.	- WD-169 Schematic & Wiring.

2. INSTALLATION

The AM-2102 Switch should be installed in the bottom of the AM-2023 Cabinet in place of the center apparatus blank per the sketch below, and connections made per the system wiring diagram.

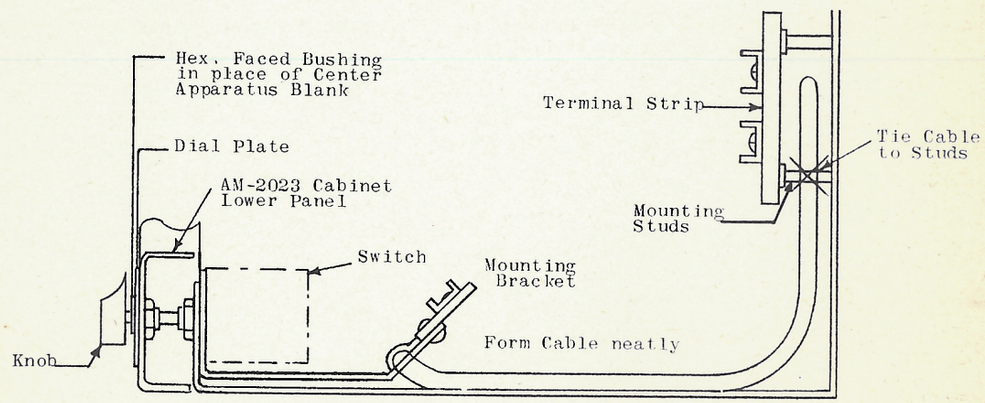

A. Grounding of Shielded Wires. The shields of the 7 shielded wires are bonded together at the switch, but are not grounded. To avoid loop grounds and noise, the shields should be grounded, during installation, at one point only in accordance with the system wiring diagram.

3. OPERATION

A. Film Reproduction. Set the selector switch in "FILM" (mid) position. System operation is normal, and the special inputs are disconnected.

B. Microphone or Phonograph Reproduction. Set the selector switch in "MICRO" (left) or "PHONO" (right) position respectively.

ALTEC SERVICE CORPORATION

AM-2102 SWITCH

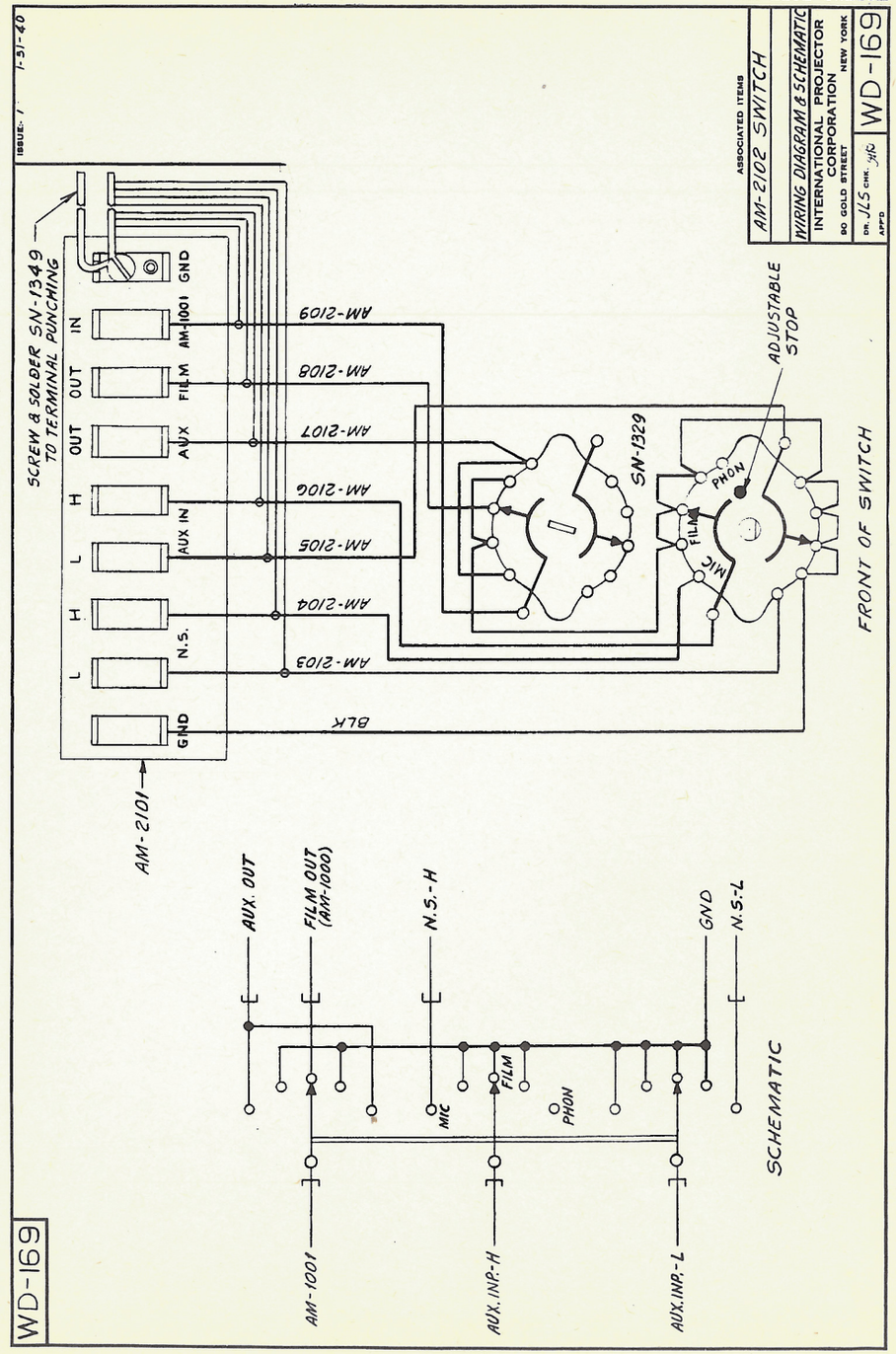

1. DESCRIPTION

Type - Three-position amplifier selector switch assembled on bracket with cable for interconnections and terminal strip for external connections. Also provided with three pairs of filament terminals for individual supply to filaments of three volume control amplifiers.

Use - For emergency switching when 2 or more AM-1001 Amplifiers operate in parallel and separate volume control amplifier filament supplies are required.

Settings

Mid Position - All system amplifiers in parallel.
Left Position - Amp. #1 or Amp. #1 and #3 operate. Amp. #2 or Amp. #2 and #4 are disconnected.
Right Position - Amp. #2 or Amp. #2 and #4 operate. Amp. #1 or Amp. #1 and #3 are disconnected.

Accessories - Dial plate and knob.
Dimensions - 3-1/4" high x 7" wide x 9" deep.
Weight - 2 lbs.
Associated Dwg. - WD-170 - Schematic & Wiring Diagram.

2. INSTALLATION

The AM-2122 should be installed in the bottom of the AM-2023 Cabinet in place of the center apparatus blank per the sketch below, and connections made per the system wiring diagram.

When four amplifiers are installed, amplifiers #1 and #3 inputs are permanently paralleled, and amplifiers #2 and #4 are similarly connected. Inoperative amplifier(s) (output, external heater and plate and the warping circuits) may therefore be disconnected and the system operated on the remaining amplifier(s). Only one warping circuit is used at a time. The inputs are not disconnected in order that the inoperative amplifier(s) may be tested and serviced while the system is operating.

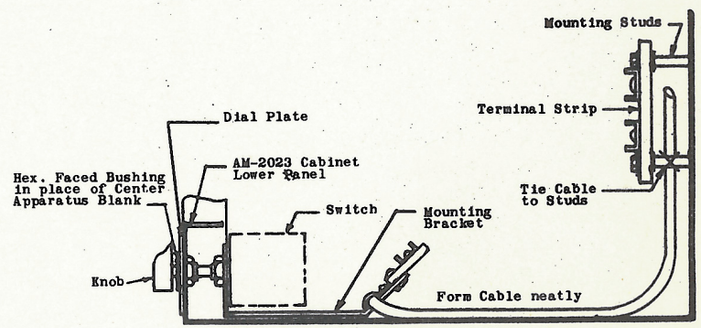

A. Grounding of Shielded Wires. The shields of the 6 shielded wires are bonded together at the switch, but are not grounded. To avoid loop grounds and noise, the shields should be grounded, during installation, at one point only in accordance with the system wiring diagram.

3. OPERATION

A. Normal. Set switch in "1-2" (mid) position - all system amplifiers operate in parallel.

B. Emergency. If #1 (or #3) amplifier fails, set switch in position "2" (right). If #2 (or #4) amplifier fails, set switch in position "1" (left).

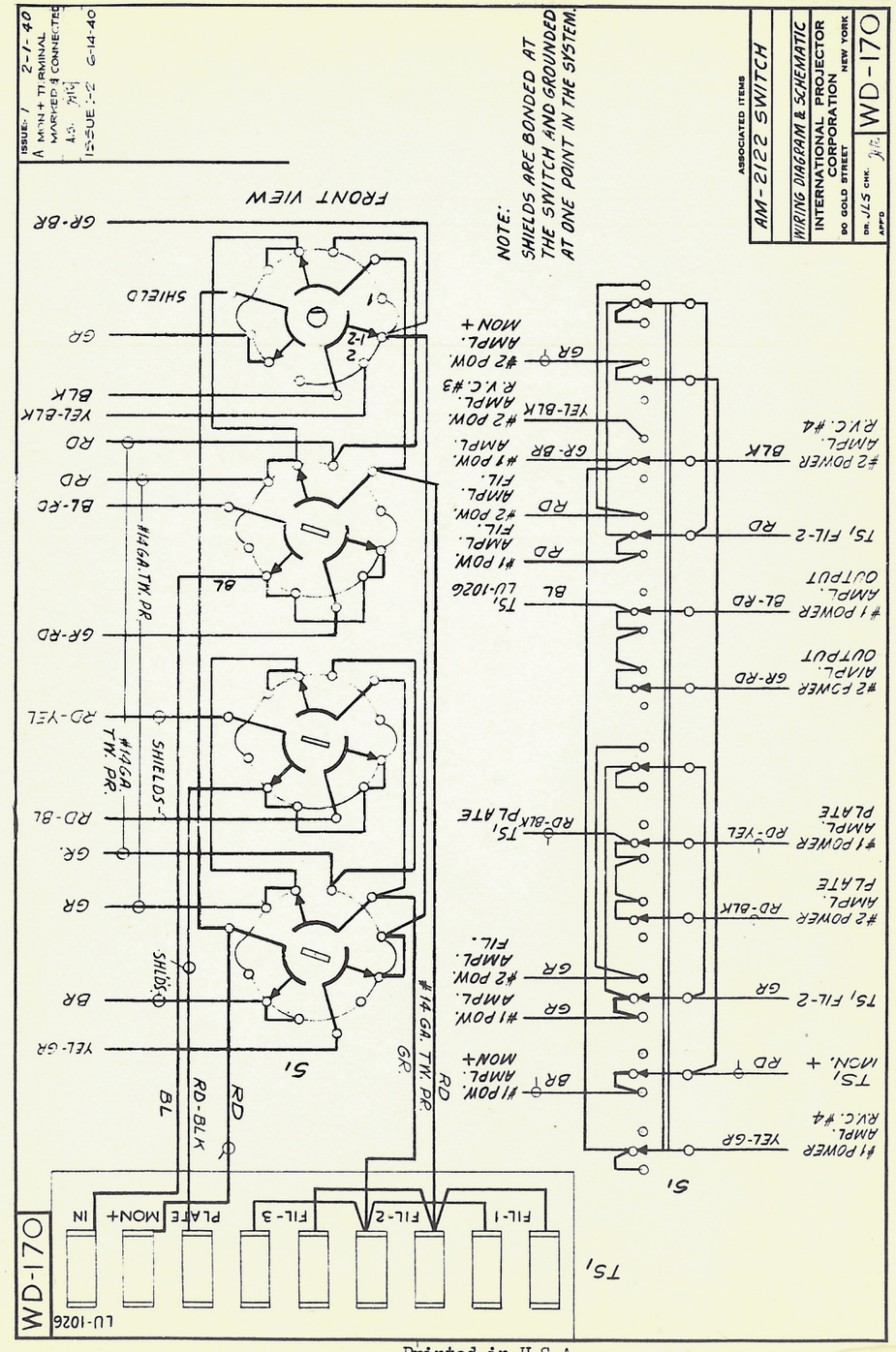
ISSUE: 1 2-1-40
A MON + TERMINAL MARKED 4 CONNECTED
ISSUE: 2 6-14-40
NOTE: SHIELDS ARE BONDED AT THE SWITCH AND GROUNDED AT ONE POINT IN THE SYSTEM.
ASSOCIATED ITEMS
AM-2122 SWITCH
WIRING DIAGRAM & SCHEMATIC
INTERNATIONAL PROJECTOR CORPORATION NEW YORK
80 GOLD STREET
DR. JLS CHK. APPD
WD-170
FRONT VIEW
GR-BR
SHIELD
GR
YEL-BLK
BLK
RD
BL-RD
#16GA. TW. PR.
GR-RD
RD-YEL
#16GA. TW. PR.
SHIELDS
RD-BL
GR.
GR
SHIELDS
BR
YEL-GR
S1
BL
RD-BLK
RD
#14 GA. TW. PR.
GR.
RD
T5, FIL-1
FIL-2
FIL-3
PLATE
MON+
IN
LU-1026
WD-170
#1 POWER AMPL. R.V.C. #4
YEL-GR
T5, IMON. +
RD
#1 POW. AMPL. MON+
BR
T5, FIL-2
GR
#1 POW. AMPL. FIL.
GR
#2 POW. AMPL. FIL.
GR
#2 POWER AMPL. PLATE
RD-BLK
#1 POWER AMPL. PLATE
RD-YEL
T5, PLATE
RD-BLK
#2 POWER AMPL. OUTPUT
GR-RD
#1 POWER AMPL. OUTPUT
BL-RD
T5, LU-1026
BL
#1 POW. AMPL. FIL.
RD
#2 POW. AMPL. FIL.
RD
T5, FIL-2
RD
#1 POW. AMPL. R.V.C. #3
GR-BR
#2 POWER AMPL. R.V.C. #4
BLK
#2 POW. AMPL. MON+
YEL-BLK
#2 POW. AMPL.
GR
S1

1. DESCRIPTION.

The AM-2197, supplied when one or two AM-1019 Amplifiers are used, is a three-position amplifier selector switch assembled on a bracket and provided with a terminal strip for external connections. A dial plate and knob are supplied.

When one AM-1019 Amplifier is employed, the switch is normally set in position #1. In case the amplifier becomes defective, the switch is set in position #2 and the system operates from the driver amplifier.

When two AM-1019 Amplifiers are used, the switch is normally set in mid-position and the two amplifiers operate in parallel. In case amplifier #1 becomes inoperative, the switch is set in position #2 and in like manner is set in position #1 if #2 amplifier becomes inoperative, thereby disconnecting the inoperative amplifier.

2. INSTALLATION.

The AM-2197 should be installed in the bottom of the AM-2023 Cabinet in place of the right hand apparatus blank per the sketch below and connections made per the system wiring diagram.

When one AM-1019 Amplifier is used, terminals 2 and 5 should be strapped and when two of these amplifiers are used, terminals 3 and 6 should be strapped.

3. OPERATION.

A. Normal.

(1) One AM-1019 Amplifier used. Set switch in position "1".

(2) Two AM-1019 Amplifiers used. Set switch in position "1-2".

B. Emergency.

(1) One AM-1019 Amplifier used. Set in position "2". The AM-1019 is disconnected and operation continues on the driver amplifier.

(2) Two AM-1019 Amplifiers used. If #1 amplifier fails, set switch in position "2". If #2 amplifier fails set switch in position "1". The defective amplifier is disconnected and operation continues on the other amplifier.

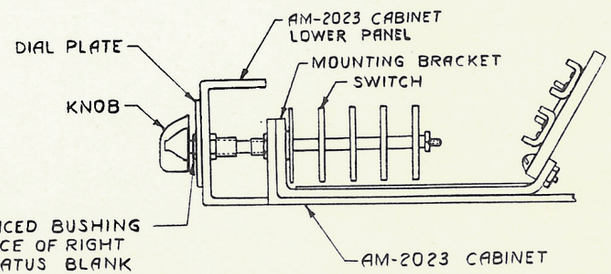

4. ASSOCIATED DRAWING. WC-1021 AM-2197 Switch, Schematic and Wiring Diagram.

Issued by
Engineering Department
Printed in U. S. A.
April 1, 1949
Issue #1

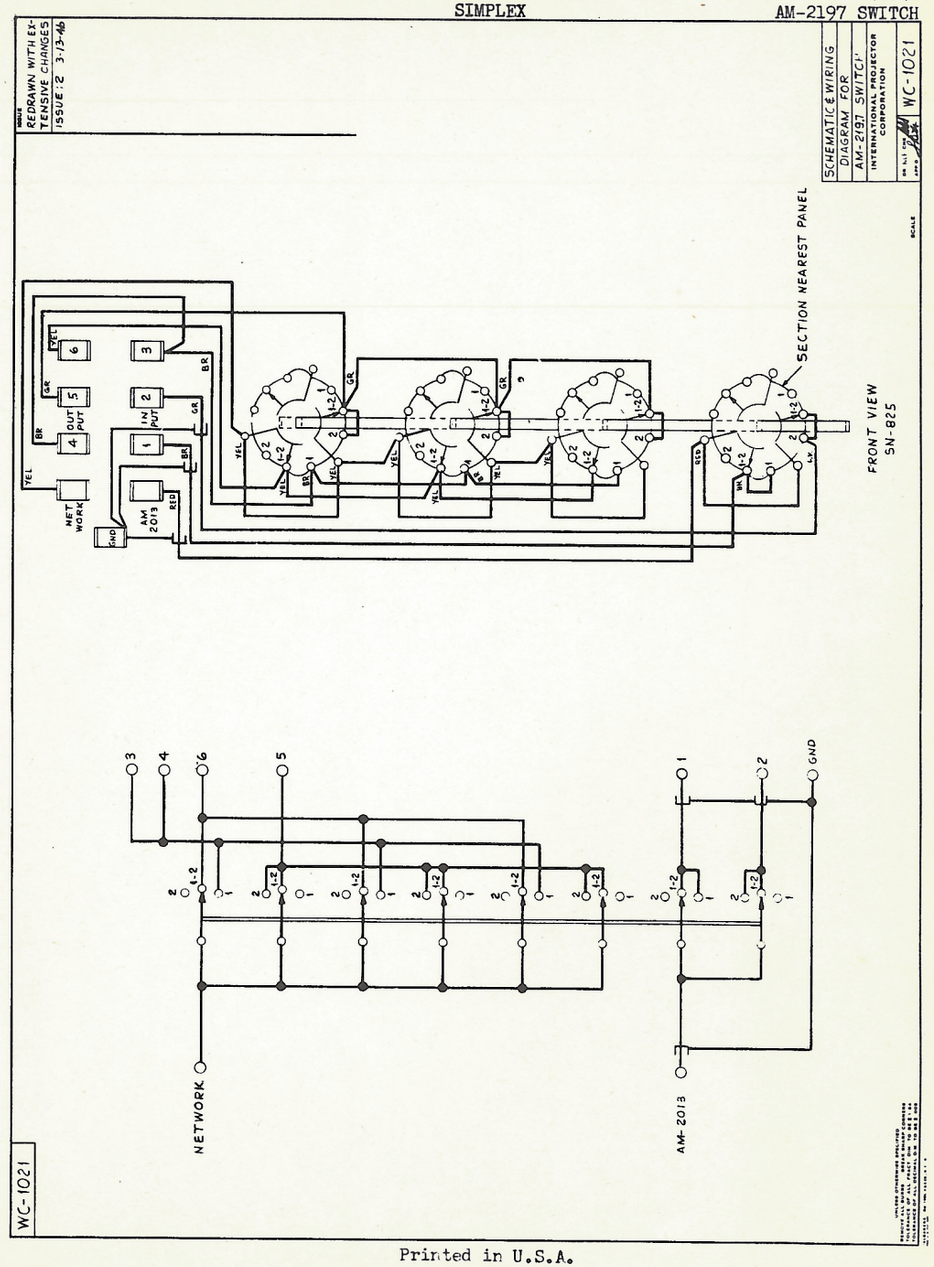
REDRAWN WITH EXTENSIVE CHANGES
ISSUE:2 3-13-46
SCHEMATIC WIRING DIAGRAM FOR AM-2197 SWITCH
INTERNATIONAL PROJECTOR CORPORATION
WC-1021
SECTION NEAREST PANEL
FRONT VIEW
SN-825
NET WORK
AM 2013
INPUT
OUTPUT
GND
NETWORK
AM-2013
WC-1021

1. DESCRIPTION

CODE NUMBER	DESCRIPTION	USE
LU-1022	Consists of two 3-position selector switches with external cable form, two dial plates, and two resistors.	Provides for individual testing of two H.F. and two L.F. speakers.
LU-1044	Consists of two 3-position selector switches with external cable form, two dial plates, and two resistors.	Provides for individual testing of two L.F. speakers, or four L.F. speakers in groups of two, and individual testing of two H.F.speakers.
LU-1063	Consists of one 3-position and one 5-position selector switch with external cable form, two dial plates and two resistors.	Provides for individual testing of two H.F. and four L.F. speakers.

ASSOCIATED DRAWINGS: LU-1022 WD-131 Schematic & Wiring
LU-1044 WD-143 " " "
LU-1063 WD-168 " " "

2. INSTALLATION

The two switches and dial plates should be installed on the panel of the network in place of the apparatus blanks as shown on the associated drawing. The cable should run beneath the chassis, be formed neatly and connected to TS_2 or TS_3 in the network. The two resistors should be installed underneath the chassis, connected to TS_2 or TS_3 and the following wiring changes made in the network (see Network Dwgs.):

A. On TS_2 remove straps between terminals "1 & 2", "5 & 6", and "6 & 7" when using LU-1003 Network, and on TS_3 remove straps between terminals "1, 2 & 3" and "7, 8, 9, 10 & 11" when using LU-1026 Network.

3. OPERATION

A. Normal. (LU-1022 & LU-1044 Switches) Set "HF" and "LF" selector switches in position "1-2", and the lower "HF" and "LF" switches on the panel in "ON" position. The two high frequency units then operate in parallel across the high frequency leg of the network, and the two low frequency units in parallel across the low frequency leg of the network. Where 4 L.F. units are installed they will be operating in series parallel across low frequency leg of network.

Normal (LU-1063 Switch). Set "HF" and "LF" selector switches in position "1-2" and "1-4" respectively. Set the lower "HF" and "LF" switches on the panel in "ON" position. The two high frequency units then operate in parallel across the high frequency leg of the network, and the four low frequency units operate in series parallel across the low frequency leg of the network.

B. Individual Loudspeaker Testing. Each speaker may be tested as follows, and defective units replaced.

H.F. Speakers (LU-1022 & 1044 & 1063 Switches). Set the lower "LF" switch in "OFF" position, and the upper "HF" selector switch successively in positions "1" and "2". Position "1" tests speaker #1 and disconnects speaker #2. Position "2" tests speaker #2 and disconnects speaker #1. When using the LU-1022 Switch an 18 ohm resistor is substituted for the disconnected speaker to maintain constant impedance and prevent overloading of the speaker under test. When using the LU-1044 Switch this resistor is 24 ohms, and when using the LU-1063 Switch it is 20 ohms.

If either unit is defective, set lower "HF" switch in "OFF" position, and the lower "LF" switch in "ON" position. The network and high frequency speakers are disconnected, and the system may be operated temporarily on two low frequency speakers.

L.F. Speakers (LU-1022 Switch). Set the lower "HF" switch in "OFF" position, and the upper "LF" selector switch successively in positions "1" and "2". Position "1" tests speaker #1 and disconnects speaker #2. Position "2" tests speaker #2 and disconnects speaker #1. A 12-ohm resistor is substituted for the disconnected speaker to maintain constant impedance and prevent overloading of the speaker under test. If either speaker is defective, set the "LF" selector switch in position to use the operative speaker, and the lower "HF" switch in "ON" position. The system may be operated temporarily on one low frequency and two high frequency speakers in an emergency.

L.F. Speakers (LU-1044 Switch). Set the lower "HF" switch in "OFF" position and the upper "LF" selector switch successively in positions "1" and "2".

With four LU-1010 Speakers, position "1" tests speakers #1 and #2 in series, and disconnects speakers #3 and #4. Position "2" tests speakers #3 and #4 in series, and disconnects

speakers #1 and #2. A 12-ohm resistor is substituted for the disconnected speakers to maintain constant impedance and prevent overloading of the speakers under test.

With two LU-1010 Speakers, position "1" tests speaker #1 and disconnects speaker #2. Position "2" tests speaker #2 and disconnects speaker #1. A 6-ohm resistor is substituted for the disconnected speaker to maintain constant impedance and prevent overloading of the speaker under test.

If either speaker or group of speakers is defective, set the "LF" selector switch in position to use the operative speaker(s), and the lower "HF" switch in "ON" position. The system may then be operated temporarily on one low frequency speaker or group of low frequency speakers and two high frequency speakers.

L.F. Speakers (LU-1063 Switch).. Set the lower "HF" switch in "OFF" position and the upper "LF" selector switch successively in positions "1", "2", "3" and "4". Position "1" tests speaker #1 and disconnects speaker #2, #3, and #4. Similarly positions "2", "3" and "4" test like numbered speakers individually and disconnect all other speakers. An L-Pad is substituted for the disconnected speakers to maintain constant impedance and prevent overloading of the speakers under test.

If one of the speakers is defective, set the "LF" selector switch to use an operative speaker and the lower "HF" switch in "ON" position. The system may then be operated temporarily on one low frequency speaker and two high frequency speakers.

WD-131

ISSUE 1 11-12-38

FRONT VIEW OF LU-1022 SWITCH

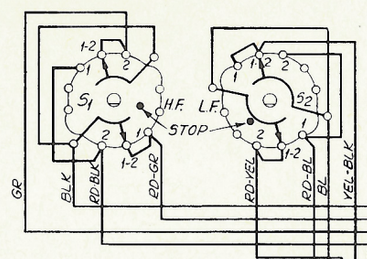

ADJUSTABLE STOPS TO BE PLACED IN POSITIONS SHOWN

DESIG	PART No	APPARATUS
S1, S2	SW-841	SWITCH
R1	" 840	RESISTOR, 18 OHM-17 WATT
R2	" 690	RESISTOR, 12 OHM-17 WATT
(A)	SW-835	HF DIAL PLATE
(B)	" 836	LF DIAL PLATE
(C)	" 798	KNOB

NOTE:- SCREWS, LOCKWASHERS AND NUTS ARE SUPPLIED WITH R_2 FOR MOUNTING ON CHASSIS. R_1 IS MOUNTED WITH SAME NUTS AND SCREWS USED ON C_4.

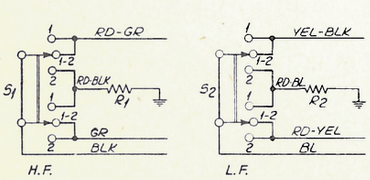

SCHEMATIC

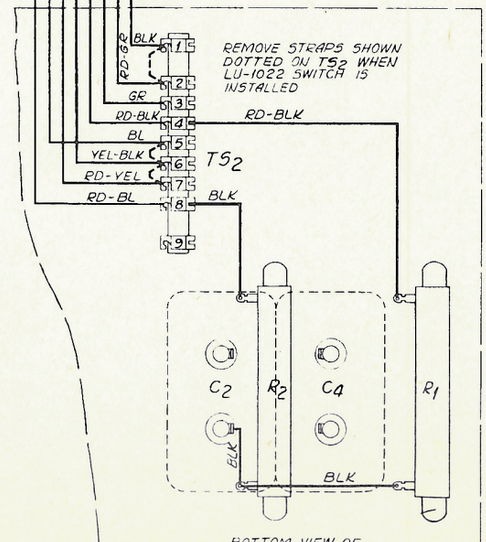

BOTTOM VIEW OF LU-1003 NETWORK CHASSIS

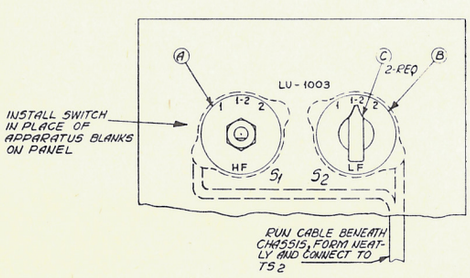

INSTALLATION OF LU-1022 SWITCH ON LU-1003 NETWORK PANEL.

LU-1022 SWITCH	
SCHEMATIC & WIRING DIAGRAM	
INTERNATIONAL PROJECTOR CORPORATION 50 GOLD STREET NEW YORK	
DR E.G.M. CH. C.F.A. APP'D	WD-131

Printed in U.S.A.

ALTEC SERVICE CORP. Simplex

40.41 LU-1022 Switch

WD-143

ISSUE 1 4-24-59

FRONT VIEW OF LU-1044 SWITCH

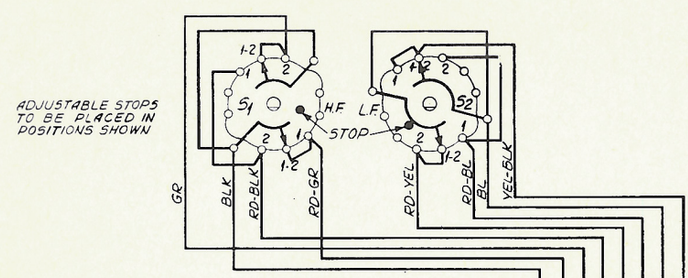

ADJUSTABLE STOPS TO BE PLACED IN POSITIONS SHOWN

DESIG	PART No	APPARATUS
S1, S2	SW-831	SWITCH
R1, R2	" -690	RESISTOR, 12 OHM-17 WATT
(A)	SW-835	H.F. DIAL PLATE
(B)	" 836	L.F. DIAL PLATE
(C)	" 798	KNOB

NOTE:- SCREWS, LOCKWASHERS AND NUTS ARE SUPPLIED WITH R1 FOR MOUNTING ON CHASSIS. R2 IS MOUNTED WITH SAME NUTS AND SCREWS USED ON C2.

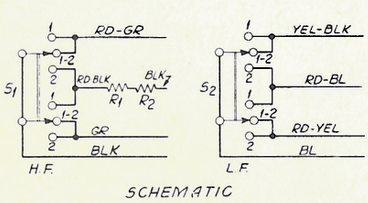

SCHEMATIC

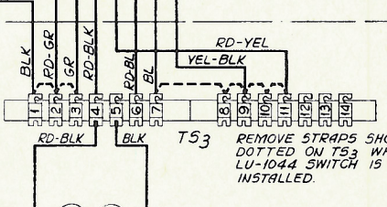

REMOVE STRAPS SHOWN DOTTED ON TS3 WHEN LU-1044 SWITCH IS INSTALLED.

ADD THIS STRAP WHEN TWO LU-1010 LOW FREQUENCY SPEAKER UNITS ARE USED ON THE STAGE.

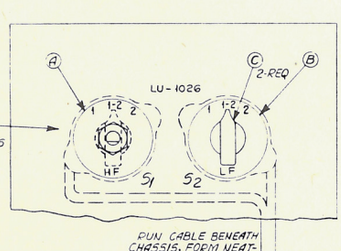

INSTALL SWITCH IN PLACE OF APPARATUS BLANKS ON PANEL

RUN CABLE BENEATH CHASSIS, FORM NEATLY AND CONNECT TO TS3

INSTALLATION OF LU-1044 SWITCH ON LU-1026 NETWORK PANEL.

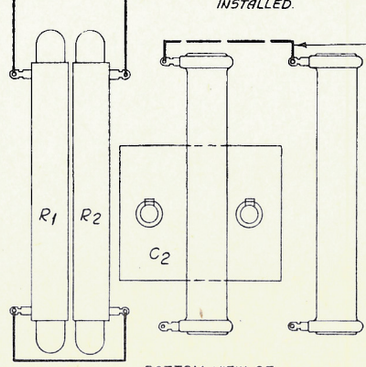

BOTTOM VIEW OF LU-1026 NETWORK CHASSIS

LU-1044 SWITCH

SCHEMATIC & WIRING DIAGRAM

INTERNATIONAL PROJECTOR CORPORATION
90 GOLD STREET NEW YORK

DR EGN CHK CFA APPD WD-143

Printed in U.S.A.

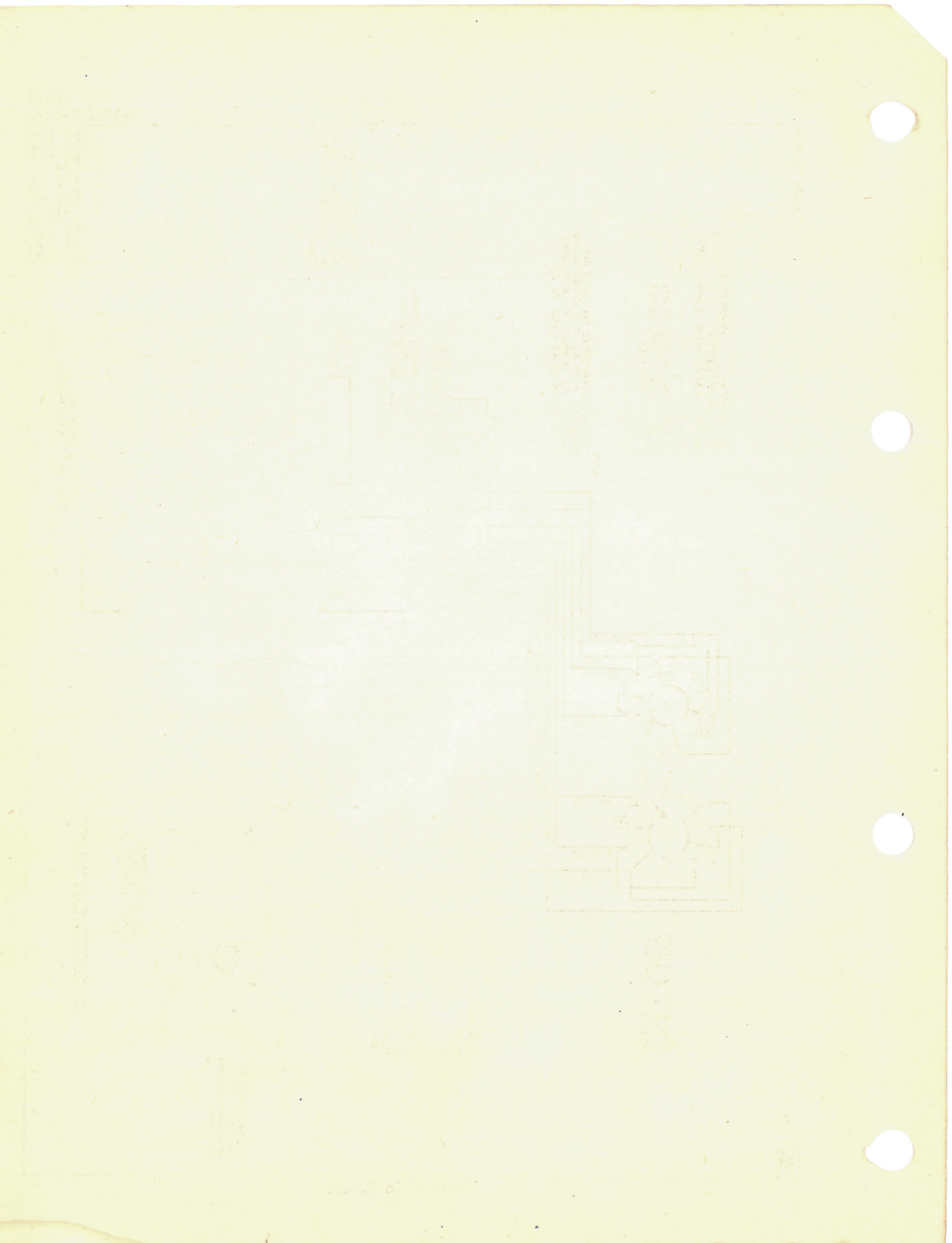

WD-168

ISSUE:-1 1-29-40

DESIG	PART NO	APPARATUS
S_1	SN-841	SWITCH
S_2	SN-1038	SWITCH
R_1	SN-897	RESISTOR 13.5 OHM 17 WATT
R_2	SN-984	RESISTOR 20 OHM 17 WATT
	SN-669	3/8-32 HEX NUT
	SN-798	KNOB
	SN-835	H.F DIAL PLATE
	SN-1061	#1220 SHAKEPROOF LOCK WASH.
	SN-1044	L.F. DIAL PLATE

NOTES:
SCREWS, LOCKWASHERS AND NUTS ARE SUPPLIED WITH R_1 FOR MOUNTING ON CHASSIS. R_2 IS MOUNTED WITH SAME NUTS AND SCREWS USED ON C_2.

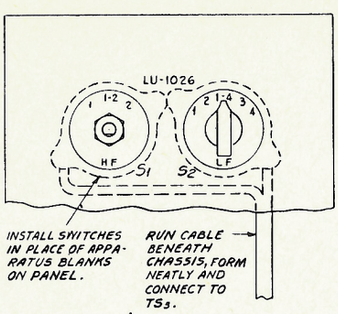

INSTALLATION OF LU-1063 SWITCH ON LU-1026 NETWORK PANEL

FRONT VIEW OF LU-1063 SWITCH

ADJUSTABLE STOPS TO BE PLACED IN POSITIONS SHOWN.

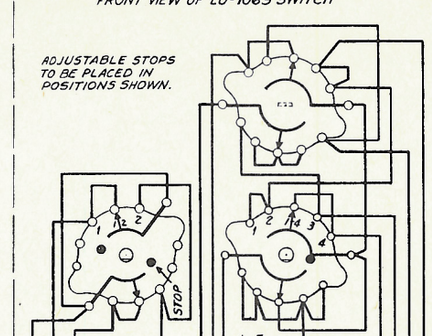

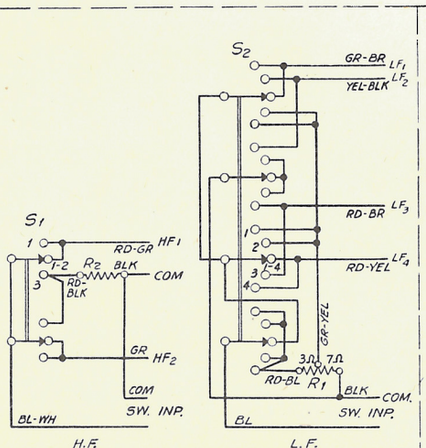

LU-1063 SWITCH SCHEMATIC

FRONT OF CHASSIS

REMOVE ALL STRAPS ON TS3 WHEN LU-1063 SWITCH IS INSTALLED.

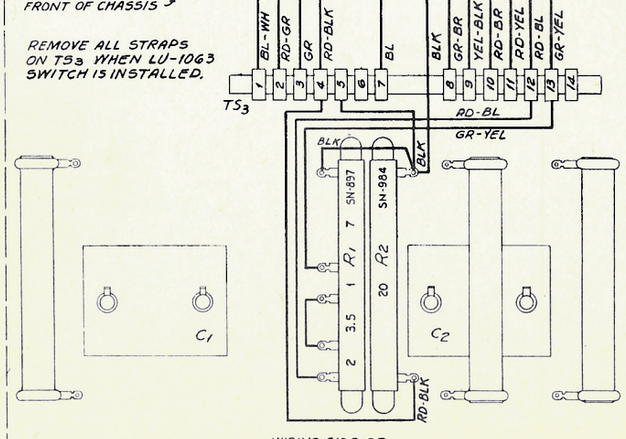

WIRING SIDE OF LU-1026 NETWORK CHASSIS

LU-1063 SWITCH	
SCHEMATIC & WIRING DIAGRAM	
INTERNATIONAL PROJECTOR CORPORATION 90 GOLD STREET NEW YORK	
DR JLSCHK APP'D	WD-168

Printed in U.S.A.

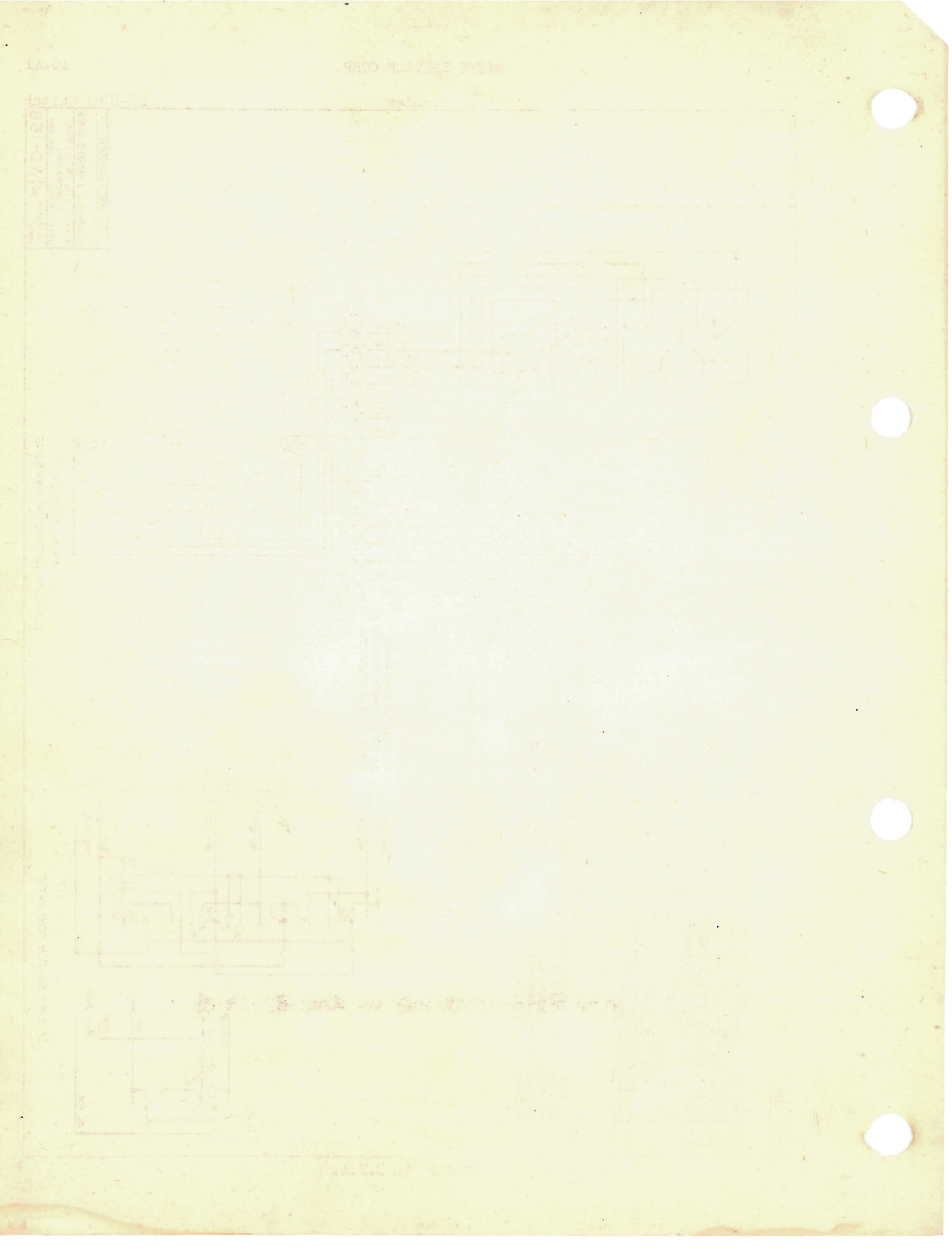

1. DESCRIPTION.

The SN-1087 is a 10 ampere, four-way (double pole, double throw) reversing toggle switch. When mounted in an SN-1088 Outlet Box (4-1/8" high x 2-1/8" wide x 1-7/8" deep) with an SN-1089 cover, it is used as an exciter lamp changeover switch with the PU-1005 Power Unit.

2. INSTALLATION.

One outlet box, switch and cover should be installed on the front wall of the Projection Room, at the right of each projection port, as shown on the system conduit layout. Connections should be made per the system wiring diagram.

3. OPERATION.

Connections to the SN-1087 Switch are made so that changeover may be made at either projector location, regardless of the projector in operation.

Set the switch so that the projector being threaded is inoperative (exciter lamp dim) to prevent disturbances reaching the audience. Changeover is then made, when the incoming machine is up to speed, by operating either switch.

The changeover schematic is shown below. When one projector is in operation (exciter lamp bright), the other exciter lamp is preheated by low voltage current to eliminate thermal lag in the filament and provide instantaneous changeover.

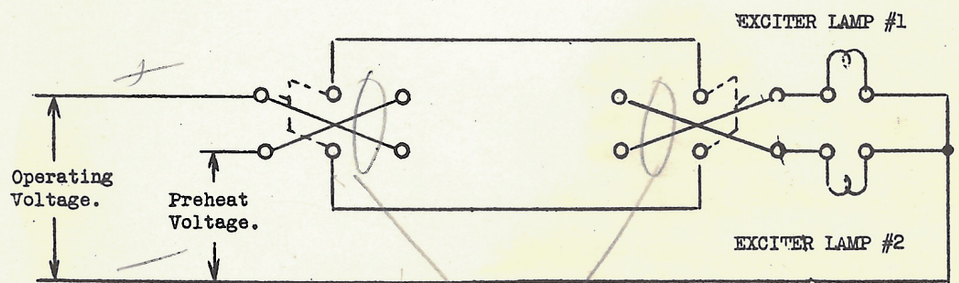

Add this strapping at installation

REDRAWN FROM ISSUE 2 WITH FOLLOWING CHANGES: NOTES: 2 AND 4 ADDED. NOTE 3 WAS NOTE 2. AM-1001 AMPLIFIER ADDED TO TITLE, SIMPLEX SOUND SYSTEMS REMOVED. LIMITS ± 1 DB ADDED IN NOTE 1. IN NOTE 3 WH-BL OR WH-YEL OR AND WH-RD-GR ADDED. WH-YEL OR WH-BL OR, WH-BR OR, WH-RD-GR OR, ADDED TO ALL BL, BR AND RD-GR WIRES RESPECTIVELY. CURVE DATA REVISED. CURVES CHANGED TO AGREE.

CR	FG
ISSUE: 3	7-22-47

HIGH END WARPING CIRCUIT
(SEE NOTE 2)
WIRING DIAGRAM

LOW END WARPING CIRCUIT
(SEE NOTE 2)
WIRING DIAGRAM

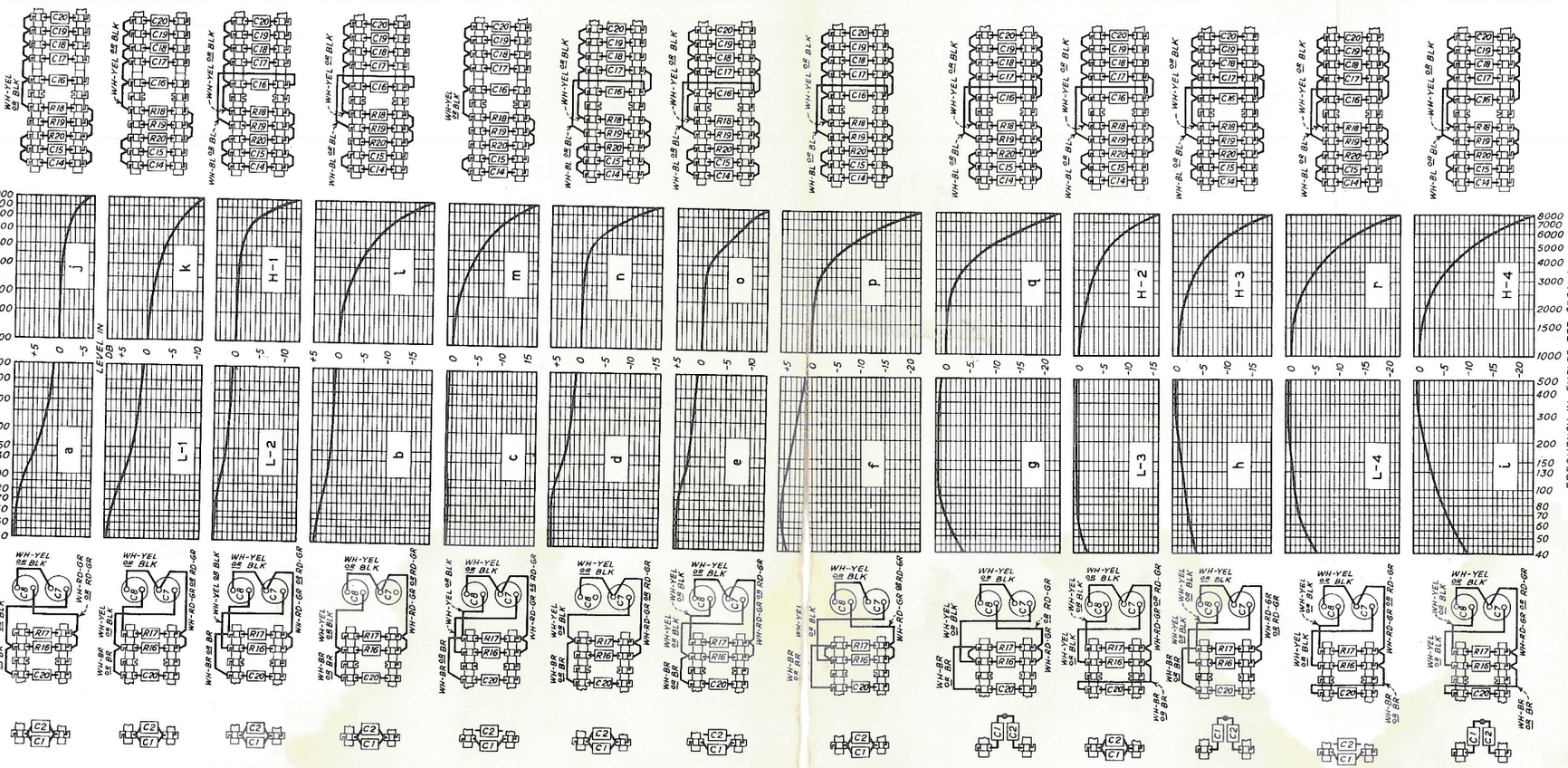

SCHEMATIC

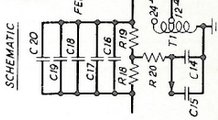

CURVE DATA - CYCLES & DEVIATIONS FROM REFERENCE IN DB

CURVE DESIG.	LOW END 40	70	130	300	500	HIGH END 1000	2000	3000	5000	7000	8000
a	8.6	7.9	3.1	1.9	0.8	0	-0.4	-0.7	-1.9	-4.1	-6.1
L-1	7.7	6.0	1.8	1.3	0.7	0	-0.3	-0.5	-1.1	-3.2	-5.0
L-2	3.9	3.2	1.8	0.8	0.5	0	-0.3	-0.5	-2.2	-8.0	-12.1
b	4.6	3.0	1.3	0.8	0.5	0	-1.5	-3.4	-6.4	-14.9	-16.5
c	5.4	4.5	0.4	0.4	0.6	0	-1.4	-3.1	-7.6	-13.3	-16.5
d	5.4	4.5	2.5	1.2	0.7	0	-1.4	-3.1	-7.6	-13.3	-16.5
e	4.5	4.3	2.5	1.2	0.7	0	-0.3	-0.9	-3.6	-10.0	-13.0
f	4.2	5.5	4.3	2.3	1.0	0	-0.5	-1.8	-8.2	-17.4	-22.0
g	-3.9	-0.2	1.7	1.7	0.9	0	-0.7	-2.3	-9.2	-18.4	-22.9
L-3	-4.0	-2.1	-1.2	0.5	0.3	0	-0.7	-2.5	-9.2	-18.4	-22.9
h	-5.3	-1.8	-0.5	0.5	0.4	0	-1.2	-3.4	-9.3	-17.2	-21.6
L-4	-10.0	-5.5	-2.6	0	0.2	0	-1.2	-3.9	-10.3	-18.5	-22.9
i						FOR ADDITIONAL NO 'EW-633 OR 8' BELDEN # 8401 ADD	0	-0.1	-0.2	-0.4	-0.6	-0.7

SCHEMATIC

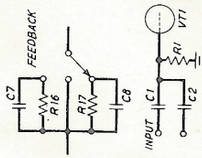

— NOTES —

1. THE FREQUENCY RESPONSE CHARACTERISTIC CURVES SHOWN (LIMITS ± 1DB) ARE OBTAINED BY ADJUSTMENT OF THE WARPING CIRCUIT IN THE AM-1001 AMPLIFIER (SEE DRAWING WD-113). CURVES L-1 TO L-4 AND H-1 TO H-4 ARE STANDARD. OTHER CURVES ARE FOR USE ONLY WHEN UNUSUAL ACOUSTIC CONDITIONS ARE ENCOUNTERED. ANY LOW END CURVE MAY BE ASSOCIATED WITH ANY HIGH END CURVE.

2. THE CURVES INCLUDE SCANNING LOSS, AND WERE OBTAINED USING ED-35 TEST FILM, 6 FEET OF SH-2100 COAXIAL CABLE (CAPACITY 8 MMF PER FOOT), AM-101 TYPE VOLUME CONTROL AMPLIFIER AND 15 FEET BELDEN # 8401 MICROPHONE CABLE, CAPACITY 26 MMF PER FOOT, (20 FEET EW-633 PLASTIC MICROPHONE CABLE OPTIONAL).

3. THE FIGURE, ASSOCIATED WITH EACH CURVE, SHOWS THE WARPING CIRCUIT STRAPPING REQUIRED TO OBTAIN THE CURVE. RECONNECT STRAPS, AS NECESSARY, AND REMOVE OTHER EXISTING STRAPS NOT SHOWN IN THE FIGURE. THE WH-BL OR BL AND WH-YEL OR BLK WIRES FROM T1 AND THE WH-RD-GR OR RD-GR WIRE FROM TS1 SHOULD REMAIN CONNECTED TO R19, C14 AND R16 RESPECTIVELY AS SHOWN ON DRAWING WD-113.

4. THE AMPLIFIER IS SHIPPED STRAPPED FOR THE L-2, H-2 CURVE.

AM-1001 AMPLIFIER
FREQUENCY RESPONSE
CHARACTERISTICS

INTERNATIONAL PROJECTOR CORPORATION
55 LA FRANCE AVENUE
BLOOMFIELD NEW JERSEY

DR. CH'K CFA APP'D. F.

SC-21

Printed in U.S.A.

SC-43

ISSUE:1 4-17-39
NOTE 1 REVISED
NOTE 3 ADDED
BY E.G.M. and Peer
ISSUE:2 8-31-39

LOW END WARPING CIRCUIT (AM-142 AMPLIFIER EQUIPMENT) WIRING DIAGRAM

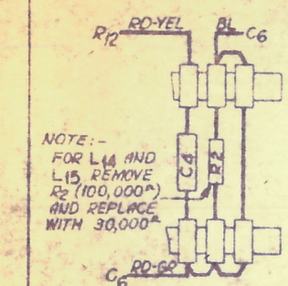

NOTE:- FOR L14 AND L15 REMOVE R_2 (100,000Ω) AND REPLACE WITH 30,000Ω

LOW END CURVE DATA
CYCLES & DEVIATIONS FROM REFERENCE IN DB

CURVE DESIG	55	70	100	200	300	500	700
L-10	+6.5	+4.5	+3.5	+2.3	+1.4	+0.5	+0.2
L-14	+3.5	+3.4	+2.8	+2.0	+1.8	+0.5	+0.2
L-12	-1.7	-0.8	-0.2	+0.5	+0.5	+0.5	+0.2

HIGH END CURVE DATA
CYCLES & DEVIATIONS FROM REFERENCE IN DB

CURVE DESIG	1000	2000	3000	5000	7000	8000
H-10	0	-0.4	-0.6	-2.8	-5.5	-7.8
H-11	0	-0.6	-1.5	-4.8	-7.9	-11.0
H-12	0	-0.7	-2.1	-6.7	-11.0	-14.5
H-13	0	-1.5	-3.6	-8.5	-14.0	-16.5

CYCLES PER SECOND

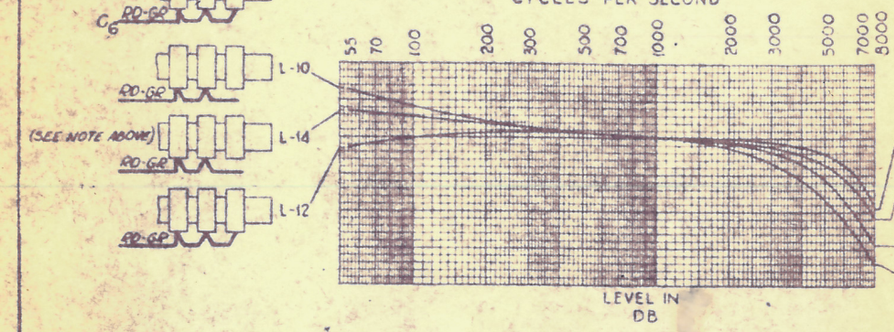

HIGH END WARPING CIRCUIT (AM-142 AMPLIFIER EQUIPMENT) WIRING DIAGRAM

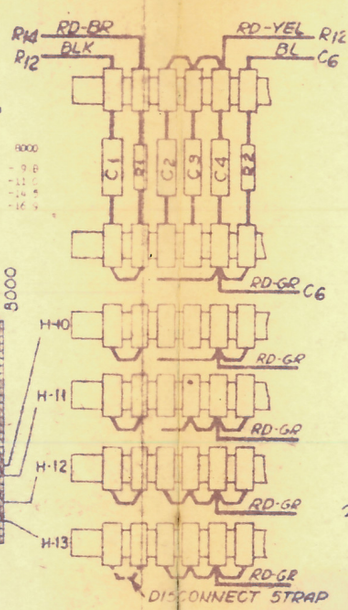

NOTES:

1. THE FREQUENCY RESPONSE CHARACTERISTICS SHOWN (LIMITS ± 1 DB) ARE OBTAINED BY ADJUSTMENT OF THE AM-142 AMPLIFIER EQUIPMENT WARPING CIRCUIT (SEE DRAWING NO-159) AND BY HIGH FREQUENCY EQUALIZATION ADJUSTMENTS IN THE AM-141 VOLUME CONTROL AMPLIFIER (SEE DRAWING NO-158) THE HIGH FREQUENCY EQUALIZATION IS "IN" FOR THE UPPER SET OF CURVES AND "OUT" FOR THE LOWER SET. THE CURVES INCLUDE SCANNING LOSS AND WERE OBTAINED USING TEST FILM, 137-44" SM-1101 COAXIAL CABLE (CAPACITY 40 MMF PER FOOT) AND 50' #8401 BELDEN MICROPHONE CABLE (CAPACITY 26 MMF PER FOOT).

2. THE FIGURE, ASSOCIATED WITH EACH CURVE, SHOWS THE STRAPPING REQUIRED TO OBTAIN THE CURVE IN THE WARPING CIRCUIT ONLY THE STRAPS ON THE LOWER ROW OF TERMINALS ARE CHANGED. RECONNECT OR REMOVE STRAPS AS INDICATED IN THE FIGURE. THE BLACK, RED-BROWN, RED-YELLOW, BLUE AND RED-GREEN WIRES SHOULD REMAIN CONNECTED AS SHOWN.

3. THE AMPLIFIER IS SHIPPED STRAPPED FOR THE L-11, H-14 CURVE.

HIGH FREQUENCY EQUALIZATION AM-141 VOLUME CONTROL AMPLIFIER WIRING DIAGRAM

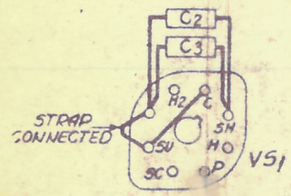

LEVEL IN DB

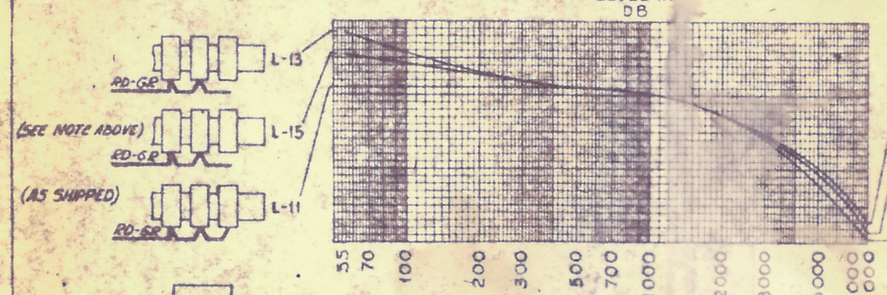

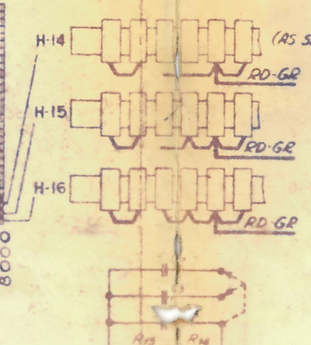

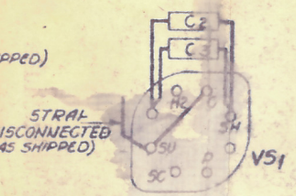

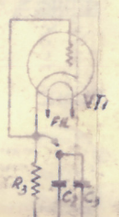

LOW END CURVE DATA
CYCLES & DEVIATIONS FROM REFERENCE IN DB

CURVE DESIG	55	70	100	200	300	500	700
L-13	+8.5	+7.2	+5.8	+3.2	+2.0	+1.0	+0.8
L-15	+5.5	+5.0	+4.2	+2.8	+2.0	+1.0	+0.8
L-11	+1.0	+1.0	+1.0	+1.0	+1.0	+1.0	+0.8

HIGH END CURVE DATA
CYCLES & DEVIATIONS FROM REFERENCE IN DB

CURVE DESIG	1000	2000	3000	5000	7000	8000
H-14	0	-2.7	-5.3	-9.8	-14.3	-17.3
H-15	0	-2.7	-5.5	-11.5	-15.8	-19.0
H-16	0	-3.0	-6.2	-12.5	-17.5	-19.8

ASSOCIATED ITEMS
FREQUENCY RESPONSE CHARACTERISTICS WITH AM-141 VOL. CONT. AMPL. & AM-142 AMPLIFIER EQUIPMENT

INTERNATIONAL PROJECTOR CORPORATION
30 GOLD STREET NEW YORK

DR EGM CHD CPR APPD Peer. SC-43

SC-46

ISSUE:1 6-23-39

LOW END WARPING CIRCUIT (AM-145 PRE-AMPLIFIER EQUIPMENT) WIRING DIAGRAM

NOTE
FOR L-24 AND L-25 REMOVE C_1 (.005 MF) AND REPLACE WITH .0025 MF AND .001 MF RESPECTIVELY.

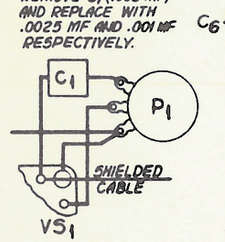

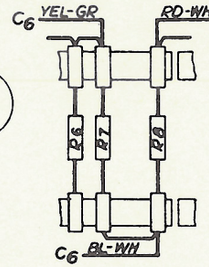

LOW END CURVE DATA
CYCLES & DEVIATIONS FROM REFERENCE IN DB

CURVE DESIG	55	70	100	130	300	500
L-20	6.7	5.1	3.3	2.6	0.9	0.2
L-21	4.4	3.8	2.8	2.2	0.9	0.2
L-22	2.2	2.1	2.0	1.7	0.9	0.2
L-23	-0.7	-0.2	0	0.1	0	0
L-24	-2.3	-1.6	-0.9	-0.5	0	0
L-25	-8.0	-6.5	-4.7	-3.4	-0.8	-0.2

HIGH END CURVE DATA
CYCLES & DEVIATIONS FROM REFERENCE IN DB

CURVE DESIG	1000	2000	2500	3000	3500	4000	5000	6000	7000	8000
H-20	0	0	0	0	0	0.1	0.2	0.7	0.4	0
H-21	0	-0.2	-0.5	-0.7	-0.8	-0.8	-1.0	-1.3	-1.8	-2.7
H-22	0	-0.2	-0.5	-0.7	-1.0	-1.2	-2.1	-3.0	-4.1	-5.2
H-23	0	-0.9	-1.2	-1.9	-2.1	-2.6	-3.6	4.3	-5.8	-8.2
H-24	0	-1.2	-2.1	-3.0	-3.8	-4.5	-6.0	7.8	-9.6	-11.8
H-25	0	-1.8	-2.9	-4.1	-5.3	-6.7	-9.2	-11.3	-13.8	-16.7

HIGH END WARPING CIRCUIT (AM-145 PRE-AMPLIFIER EQUIPMENT) WIRING DIAGRAM

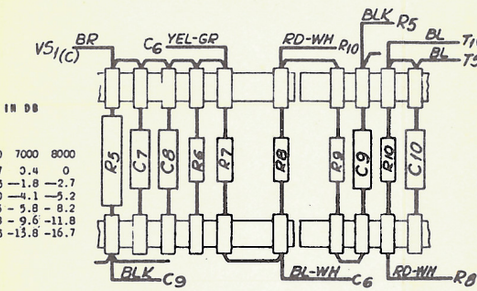

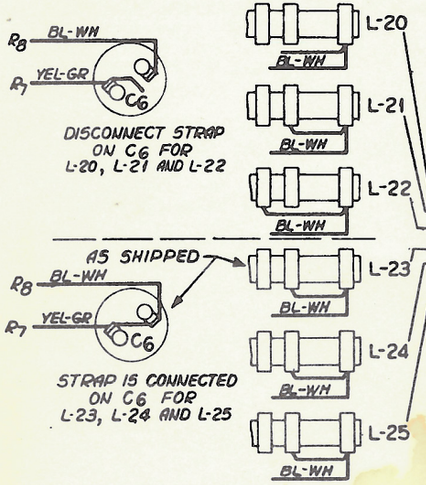

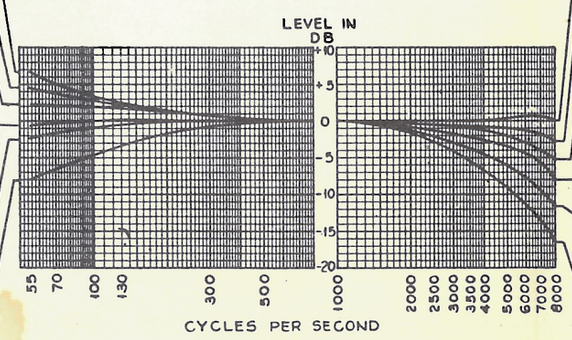

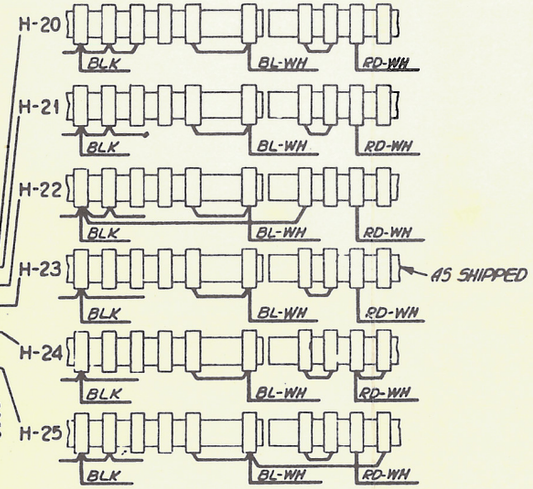

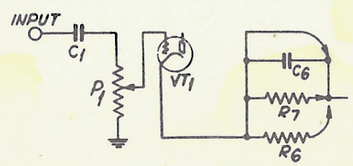

NOTES:

1. THE FREQUENCY RESPONSE CHARACTERISTICS SHOWN(LIMITS ±1db) ARE OBTAINED BY ADJUSTMENTS OF THE AM-145 PRE-AMPLIFIER EQUIPMENT WARPING CIRCUIT (SEE DRAWING WD-160). .THEY INCLUDE SCANNING LOSS AND WERE OBTAINED USING TEST FILM AND 6 FEET OF SH-2100 COAXIAL CABLE (CAPACITY 8 MMF PER FOOT).

2. THE FIGURE, ASSOCIATED WITH EACH CURVE, SHOWS THE STRAPPING REQUIRED TO OBTAIN THE CURVE, IN THE WARPING CIRCUIT ONLY THE STRAPS ON THE LOWER ROW OF TERMINALS ARE CHANGED. RECONNECT OR REMOVE STRAPS AS INDICATED IN THE FIGURE. THE COLOR CODED CABLE FORM WIRES SHOULD REMAIN CONNECTED AS SHOWN.

3. THE AMPLIFIER IS SHIPPED STRAPPED FOR THE L_{23}, H_{23} CURVE.

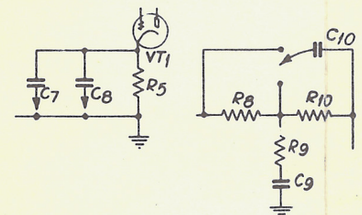

FREQUENCY RESPONSE CHARACTERISTICS WITH AM-145 PRE-AMPLIFIER EQUIP.
INTERNATIONAL PROJECTOR CORPORATION
90 GOLD STREET NEW YORK
DR. E.G.M. CHK'D APP'D
SC-46

X-L SOUND SYSTEMS
VOLTAGE AND CURRENT TEST DATA

Vacuum Tube	Pin #1	Pin #2	Pin #3	Pin #4	Pin #5	Pin #6	Pin #7	Pin #8	Tube Cap	Other Voltage Data / Total Plate Current
AM-1026 AMPLIFIER (See Notes: 1 and 2)										
V1 (6SL7GT)	G2 50	P2 205	K2 90	G1 0	P1 90	K1 0.6	H 3AC	H 3AC	-	Junction R32 and L1 590 V
V2 (6SL7GT)	G2 50	P2 205	K2 90	G1 0	P1 90	K1 0.6	H 3AC	H 3AC	-	Junction R25 and C7 -150 V
V3 (6SN7GTA)	G2 -10	P2 300	K2 -30	G1 -10	P1 300	K1 -30	H 3AC	H 3AC	-	Junction R25 and C6 -185 V
V4 (#807)	H 3AC	G2 300	G1 -30	K 0.2	H 3AC	-	-	-	585	
V5 (#807)	H 3AC	G2 300	G1 -30	K 0.2	H 3AC	-	-	-	585	Total Plate Current 140 MA
V6 (VR-150)	-	K 0	-	-	P 150	-	-	-	-	(See Note: 5)
V7 (VR-150)	-	K 150	-	-	P 300	-	-	-	-	
V8 (5R4GY)	-	F 560	-	P2 720AC	-	P1 720AC	-	F 600	-	
V9 (5R4GY)	-	F 560	-	P2 720AC	-	P1 720AC	-	F 600	-	
AM-1027 AMPLIFIER (See Notes: 1 and 2)										
V1 (6SL7GT)	G2 0	P2 155	K2 0.9	G1 0	P1 155	K1 0.9	H 3AC	H 3AC	-	Junction L1 and C10 385 V
V2 (6SL7GT)	G2 -10	P2 300	K2 -25	G1 -10	P1 300	K1 -25	H 3AC	H 3AC	-	Junction R25 and C7 -165 V
V3 (6L6G)	-	H 3AC	P 370	G2 300	G1 -25	-	H 3AC	K 0.3	-	Junction R25 and C6 -165 V
V4 (6L6G)	-	H 3AC	P 370	G2 300	G1 -25	-	H 3AC	K 0.3	-	Total Plate Current 170 MA
V5 (5R4GY)	-	F 380	-	P2 490AC	-	P1 490AC	-	F 385	-	(See Note: 5)
AM-1028 PEC AMPLIFIER (See Notes 1 and 3)										
V1 (6J7)	SH 0	H 3AC	P 52	G2 25	G3 0.9	-	H 3AC	K 0.9	-	Total Plate Current 4 MA
V2 (6J7)	SH 0	H 3AC	P 160	G2 160	G3 160	-	H 3AC	K 16	-	(See Note: 6)
P1 (Connector)	3AC	65	0	0	0	3AC	285	0	-	
AM-1029 MONITOR AMPLIFIER (See Notes: 1 and 2)										
V1 (6SL7GT)	G2 0	P2 110	K2 0.8	G1 0	P1 110	K1 0.8	H 3AC	H 3AC	-	Total Plate Current 55 MA
V2 (6L6G)	-	H 3AC	P 300	G2 260	G1 0	-	H 3AC	K 18	-	(See Note: 7)
V3 (5Y3GT)	-	F 335	-	P2 310AC	-	P1 310AC	-	F 340	-	

NOTES

1. All voltages are:-
   a. DC unless otherwise specified.
   b. To system ground.
   c. Taken with a 1000 ohm/volt voltmeter.
   d. With a 115 volt, 60 cycle AC power supply.
   e. With no signal.
2. The AM-1026, AM-1027 and AM-1029 Amplifier data were obtained without load.
3. The AM-1028 PEC Amplifier plate and heater supply are obtained from the AM-1026 or AM-1027 Amplifier.
4. The PU-1009 and PU-1010 Power Unit data were obtained with 4 amperes flowing to each of two exciter lamps.
5. Disconnect B1 wire from L1 and insert 0-250 MA DC meter.
6. Disconnect wire from B+ terminal on Soundhead and insert 0-10 MA DC meter.
7. Disconnect strap from V3, Pin #8 and insert 0-100 MA DC meter.

PU-1009, PU-1010 Power Unit (See Notes: 1 and 4)	
Junction CR1 and L1	14. V DC
Junction L1 and L2	12.5 V DC
Junction L2 and C2	11.0 V DC
T1 SS	17.5 V AC

Amplifier Code	Impedance-Ohms Input	Output
AM-1026	500	8,16,32
AM-1027	500	8,16
AM-1028	PEC	500
AM-1029	0.5 MEG	4, 8,15

ALTEC SERVICE CORPORATION
SIMPLEX
XL SOUND SYSTEMS
SOUND EQUIPMENT BULLETIN

COMPONENT	PRIMARY		SECONDARY	
	TERMINALS	OHMS	TERMINALS	OHMS
AM-1026 AMPLIFIER				
T1 (Input)	P-P	22	S-S	2230
T2 (Output)	P-P	156	0-8 0-16 0-32	0.8 1.1 1.5
T3 (Power)	C-125	1.1	5-5 6.3-6.3 HV-HV CT-BT	0.1 0.1 145 14
L1	-	60	-	-
AM-1027 AMPLIFIER				
T1 (Input)	P-P	22	S-S	2230
T2 (Output)	P-P	246	0-8 0-16	1. 1.3
T3 (Power)	C-125	2.2	5-5 6.3-6.3 HV-HV CT-BT	0.1 0.1 175 21
L1	-	100	-	-
AM-1028 PRE-AMPLIFIER				
T1 (Output)	P-P	1400	S-S	25
AM-1029 MONITOR AMPLIFIER				
T1 (Output)	P-P	440	0-4 0-8 0-16	0.6 0.8 1.1
T2 (Power)	0-125	7.3	5-5 6.3-6.3 HV-HV	[illegible] 360
PU-1009, PU-1010 POWER UNIT				
T1 (Power) L1 and L2	P-P -	1.1 0.2 Max.	S-S -	0.2 -

NOTES

1. All resistance measurements are to be made with all vacuum tubes removed and the cable form wires disconnected from the associated terminal strip.

INTERNATIONAL PROJECTOR CORPORATION
BLOOMFIELD, N. J.

X-L SOUND SYSTEMS
VOLTAGE AND CURRENT TEST DATA

Vacuum Tube	Pin #1	Pin #2	Pin #3	Pin #4	Pin #5	Pin #6	Pin #7	Pin #8	Tube Cap	Other Voltage Data Total Plate Current
AM-1026 AMPLIFIER (See Notes: 1 and 2)										
V1 (6SL7GT)	G2 50	P2 205	K2 90	G1 0	P1 90	K1 0.6	H 3AC	H 3AC	-	Junction R32 and L1 590 V
V2 (6SL7GT)	G2 50	P2 205	K2 90	G1 0	P1 90	K1 0.6	H 3AC	H 3AC	-	Junction R25 and C7 -150 V
V3 (6SN7GTA)	G2 -10	P2 300	K2 -30	G1 -10	P1 300	K1 -30	H 3AC	H 3AC	-	Junction R25 and C6 -185 V
V4 (#807)	H 3AC	G2 300	G1 -30	K 0.2	H 3AC	-	-	-	585	
V5 (#807)	H 3AC	G2 300	G1 -30	K 0.2	H 3AC	-	-	-	585	Total Plate Current 140 MA
V6 (VR-150)	-	K 0	-	-	P 150	-	-	-	-	(See Note: 5)
V7 (VR-150)	-	K 150	-	-	P 300	-	-	-	-	
V8 (5R4GY)	-	F 560	-	P2 720AC	-	P1 720AC	-	F 600	-	
V9 (5R4GY)	-	F 560	-	P2 720AC	-	P1 720AC	-	F 600	-	
AM-1027 AMPLIFIER (See Notes: 1 and 2)										
V1 (6SL7GT)	G2 0	P2 155	K2 0.9	G1 0	P1 155	K1 0.9	H 3AC	H 3AC	-	Junction L1 and C10 385 V
V2 (6SL7GT)	G2 -10	P2 300	K2 -25	G1 -10	P1 300	K1 -25	H 3AC	H 3AC	-	Junction R25 and C7 -165 V
V3 (6L6G)	-	H 3AC	P 370	G2 300	G1 -25	-	H 3AC	K 0.3	-	Junction R25 and C6 -165 V
V4 (6L6G)	-	H 3AC	P 370	G2 300	G1 -25	-	H 3AC	K 0.3	-	Total Plate Current 170 MA
V5 (5R4GY)	-	F 380	-	P2 490AC	-	P1 490AC	-	F 385	-	(See Note: 5)
AM-1028 PEC AMPLIFIER (See Notes 1 and 3)										
V1 (6J7)	SH 0	H 3AC	P 52	G2 25	G3 0.9	-	H 3AC	K 0.9	-	Total Plate Current 4 MA
V2 (6J7)	SH 0	H 3AC	P 160	G2 160	G3 160	-	H 3AC	K 16	-	(See Note: 6)
P1 (Connector)	3AC	65	0	0	0	3AC	285	0	-	
AM-1029 MONITOR AMPLIFIER (See Notes: 1 and 2)										
V1 (6SL7GT)	G2 0	P2 110	K2 0.8	G1 0	P1 110	K1 0.8	H 3AC	H 3AC	-	Total Plate Current 55 MA
V2 (6L6G)	-	H 3AC	P 300	G2 260	G1 0	-	H 3AC	K 18	-	(See Note: 7)
V3 (5Y3GT)	-	F 335	-	P2 310AC	-	P1 310AC	-	F 340	-	

PU-1009, PU-1010 Power Unit (See Notes: 1 and 4)	
Junction CR1 and L1	14. V DC
Junction L1 and L2	12.5 V DC
Junction L2 and C2	11.0 V DC
T1 SS	17.5 V AC

Amplifier Code	Impedance-Ohms Input	Output
AM-1026	500	8,16,32
AM-1027	500	8,16
AM-1028	PEC	500
AM-1029	0.5 MEG	4, 8,15

NOTES

1. All voltages are:-
   a. DC unless otherwise specified.
   b. To system ground.
   c. Taken with a 1000 ohm/volt voltmeter.
   d. With a 115 volt, 60 cycle AC power supply.
   e. With no signal.
2. The AM-1026, AM-1027 and AM-1029 Amplifier data were obtained without load.
3. The AM-1028 PEC Amplifier plate and heater supply are obtained from the AM-1026 or AM-1027 Amplifier.
4. The PU-1009 and PU-1010 Power Unit data were obtained with 4 amperes flowing to each of two exciter lamps.
5. Disconnect B1 wire from L1 and insert 0-250 MA DC meter.
6. Disconnect wire from B+ terminal on Soundhead and insert 0-10 MA DC meter.
7. Disconnect strap from V3, Pin #8 and insert 0-100 MA DC meter.

INTERNATIONAL PROJECTOR CORPORATION
BLOOMFIELD, N. J.

Printed in U.S.A.
5-51
Issue #2

ALTEC SERVICE CORPORATION
SIMPLEX
XL SOUND SYSTEMS
SOUND EQUIPMENT BULLETIN

COMPONENT	PRIMARY		SECONDARY	
	TERMINALS	OHMS	TERMINALS	OHMS
AM-1026 AMPLIFIER				
T1 (Input)	P-P	22	S-S	2230
T2 (Output)	P-P	156	0-8 0-16 0-32	0.8 1.1 1.5
T3 (Power)	C-125	1.1	5-5 6.3-6.3 HV-HV CT-BT	0.1 0.1 145 14
L1	-	60	-	-
AM-1027 AMPLIFIER				
T1 (Input)	P-P	22	S-S	2230
T2 (Output)	P-P	246	0-8 0-16	1. 1.3
T3 (Power)	C-125	2.2	5-5 6.3-6.3 HV-HV CT-BT	0.1 0.1 175 21
L1	-	100	-	-
AM-1028 PRE-AMPLIFIER				
T1 (Output)	P-P	1400	S-S	25
AM-1029 MONITOR AMPLIFIER				
T1 (Output)	P-P	440	0-4 0-8 0-16	0.6 0.8 1.1
T2 (Power)	0-125	7.3	5-5 6.3-6.3 HV-HV	[illegible] 360
PU-1009, PU-1010 POWER UNIT				
T1 (Power) L1 and L2	P-P -	1.1 0.2 Max.	S-S -	0.2 -

NOTES

1. All resistance measurements are to be made with all vacuum tubes removed and the cable form wires disconnected from the associated terminal strip.

INTERNATIONAL PROJECTOR CORPORATION
BLOOMFIELD, N. J.