$2.40

SERVICING TV VERTICAL AND HORIZONTAL OUTPUT SYSTEMS

by Harry E. Thomas

JOHN F. RIDER PUBLISHER, INC.
480 Canal Street • New York 13, N. Y.

First Edition

Library of Congress Catalog Card No. 53-12611

Printed in the United States of America

PREFACE

Deflection and output systems have stemmed from the old 630TS design since the early days of television. These models, for the most part, have incorporated the high voltage flyback principle in their horizontal output transformers. Their vertical deflection systems were essentially extensions of Class-A audio amplifier design.

This volume covers the basic fundamentals employed in these early output systems, since they formed the background of our present-day practices. We go further, however, and follow the development and improvements in deflection systems throughout the intervening years, so that, in effect, our material is partly history. Of particular interest in this advance are the improvements in cathode-ray tubes, deflection efficiencies, increase in high voltage, and improvements in image reproduction.

The horizontal output transformer is probably the most important of all the components concerned with these improvements. This is true first, because it is quite complicated electrically as well as mechanically, and secondly, because it is an electrical device which attains utmost performance while serving several common functions. We aim in our explanation of its fundamental electrical functioning to simplify the coordination of these actions in a manner which will be understood by both the novice and the engineer.

In following the development of output circuits, we have discussed modern designs reflected by the above engineering advances just as they are used in actual commercial receivers. Some of the older designs are still used by certain manufacturers for reasons of their own, but the latest and most efficient designs are, in general, used by leading manufacturers in current designs.

Deflection yokes have been discussed as strictly electrical items, directly associated with the overall system. In doing this, we have treated them as an electro-optical device only as far as is warranted in the scope of the remaining material.

As an aid to the serviceman and to summarize the actual operation of the various systems, we have concluded the material with a chapter on commonly encountered faults and on servicing procedure by means of specific waveform and voltage measurements.

The author wishes to acknowledge the help and guidance of Mr. John F. Rider in the writing of this book. His organization and interpretation of some of the material have been of immeasurable assistance.

April, 1954

H. E. T.

CONTENTS

CHAPTER 1

FUNDAMENTAL CONDITIONS

Except the sound i-f and the audio amplifier, all sections of a TV receiver have a bearing on the reproduction of the televised image on the picture tube screen. However, only two major sections of a TV receiver are dealt with in this book. They are the *vertical* and the *horizontal sweep output* systems. Each output system encompasses everything between the grid of its output tube and the windings on the deflection yoke.

Interestingly enough, the organization of vertical and horizontal sweep systems does not differ too greatly in the split-sound receiver shown in Fig. 1-1 (A) and in the intercarrier type of receiver shown in Fig. 1-1 (B). The specific circuitry and constants of these output systems may be found to differ in different makes and models of receivers, but the relationship between them and the remainder of the receiver is fairly consistent. Therefore, whatever is said in this book will be found equally applicable to split-sound and to intercarrier receivers.

Function of the Sweep Output System

In general terms, the function of the sweep output system in either type of receiver is to deliver to its related deflection winding that sweep voltage which will result in the proper sawtooth sweep current in the deflection coil. The sawtooth currents thus produced result in simultaneous vertical and horizontal deflection of the electron beam in the picture tube.

Reference to Fig. 1-1 (A) and (B) indicates that the respective sweep oscillators feed signals to the sweep output systems, and thus to the deflection coils. In the strict sense, this is correct only for the vertical output system. It receives the sweep voltage from the vertical sweep oscillator and after some processing, delivers it to the vertical deflection coil. As far as the horizontal output system is concerned, this is only

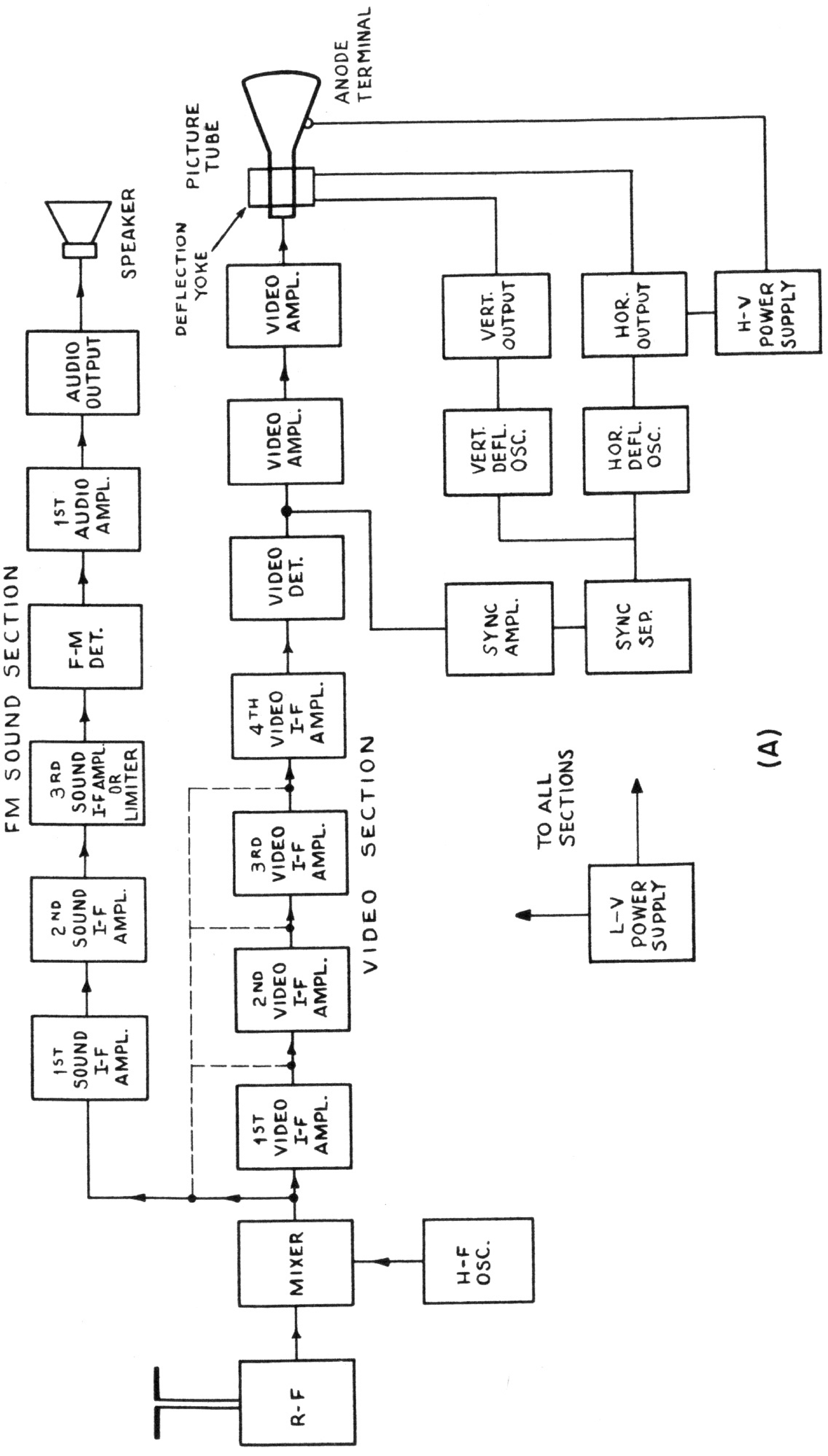

Fig. 1-1. (A) Block diagram of split-sound receiver.

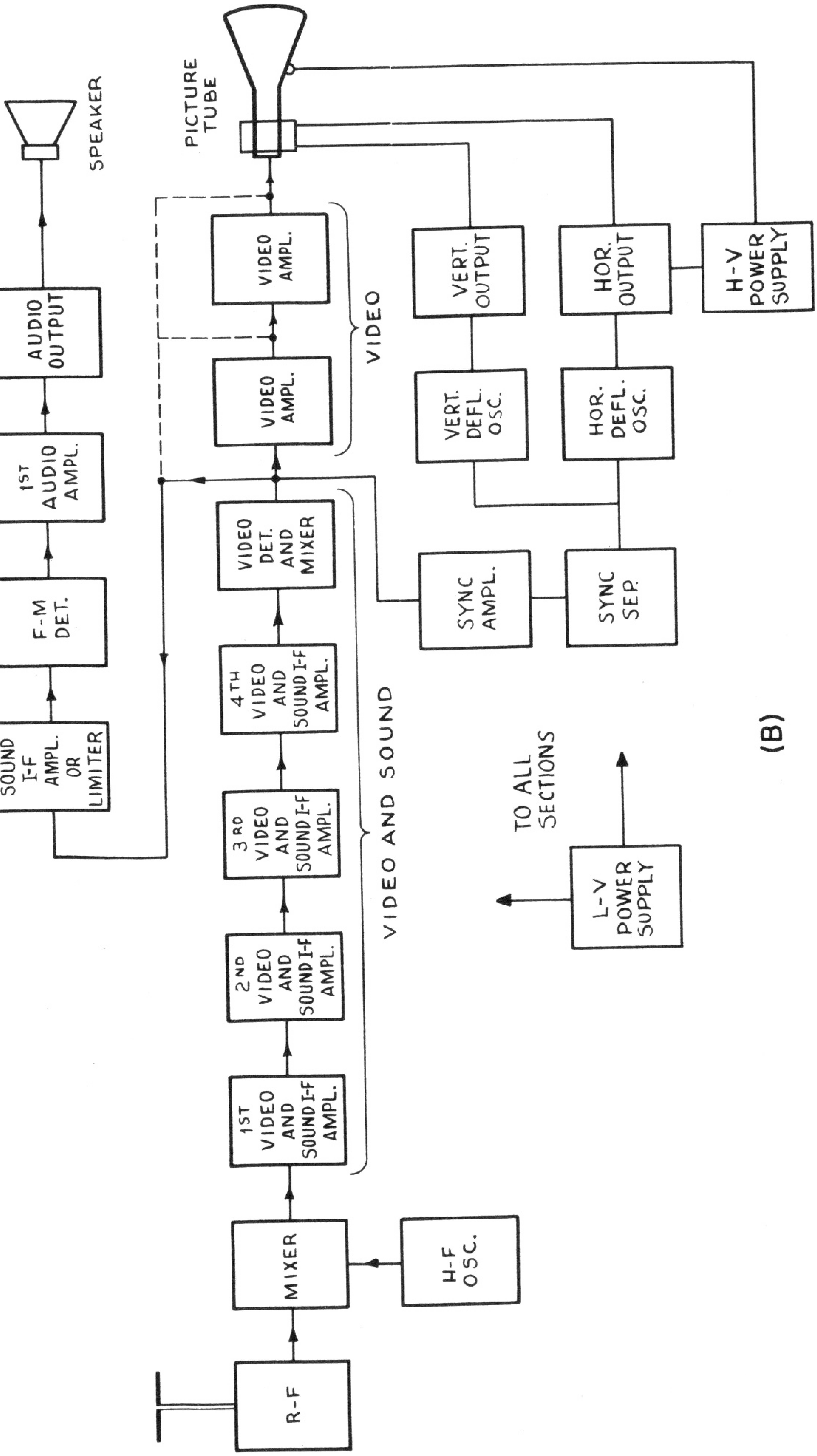

Fig. 1-1. (B) Block diagram of intercarrier receiver.

partly true. It is this situation which makes the horizontal sweep output system so interesting, and at first glance, somewhat complicated.

Although we are not too much concerned with the vertical and horizontal sweep generators (or oscillators), because we assume that they deliver the proper kind of signal to the respective sweep output tubes, a capsule review of these sections of a TV receiver follows later in this chapter.

Deflection Process

The deflection process in the electromagnetically deflected picture tube consists of placing the electron beam in the tube under the simultaneous influence of the horizontal and vertical varying electromagnetic fields. Each field is created by a varying sawtooth-shaped sweep current derived from one of the output systems and which flows through the related deflection winding. The sweep current in each deflection coil is the result of the properly shaped sweep voltages applied across the terminals of that coil. The sweep voltages are symbolized in Fig. 1-2, with more complete details in subsequent chapters.

It has been stated that the two deflection fields act simultaneously. However, in discussing them it is more convenient to describe each section individually, although they combine to produce a single resultant. It should also be noted that these two fields and the electromagnetic field

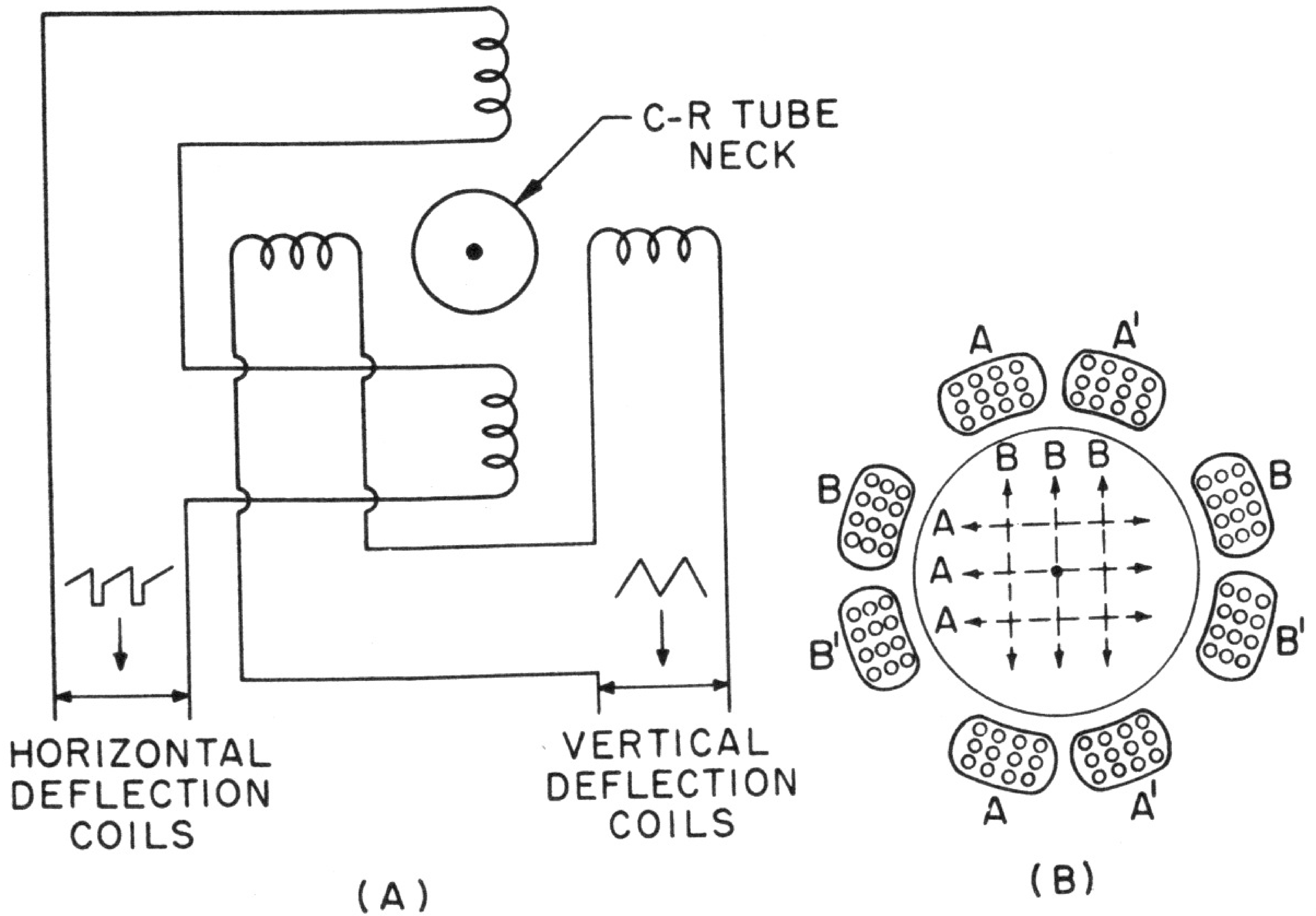

Fig. 1-2. (A) Position of deflection coils relative to cathode ray tube and (B) individual fields of coils at any one instant.

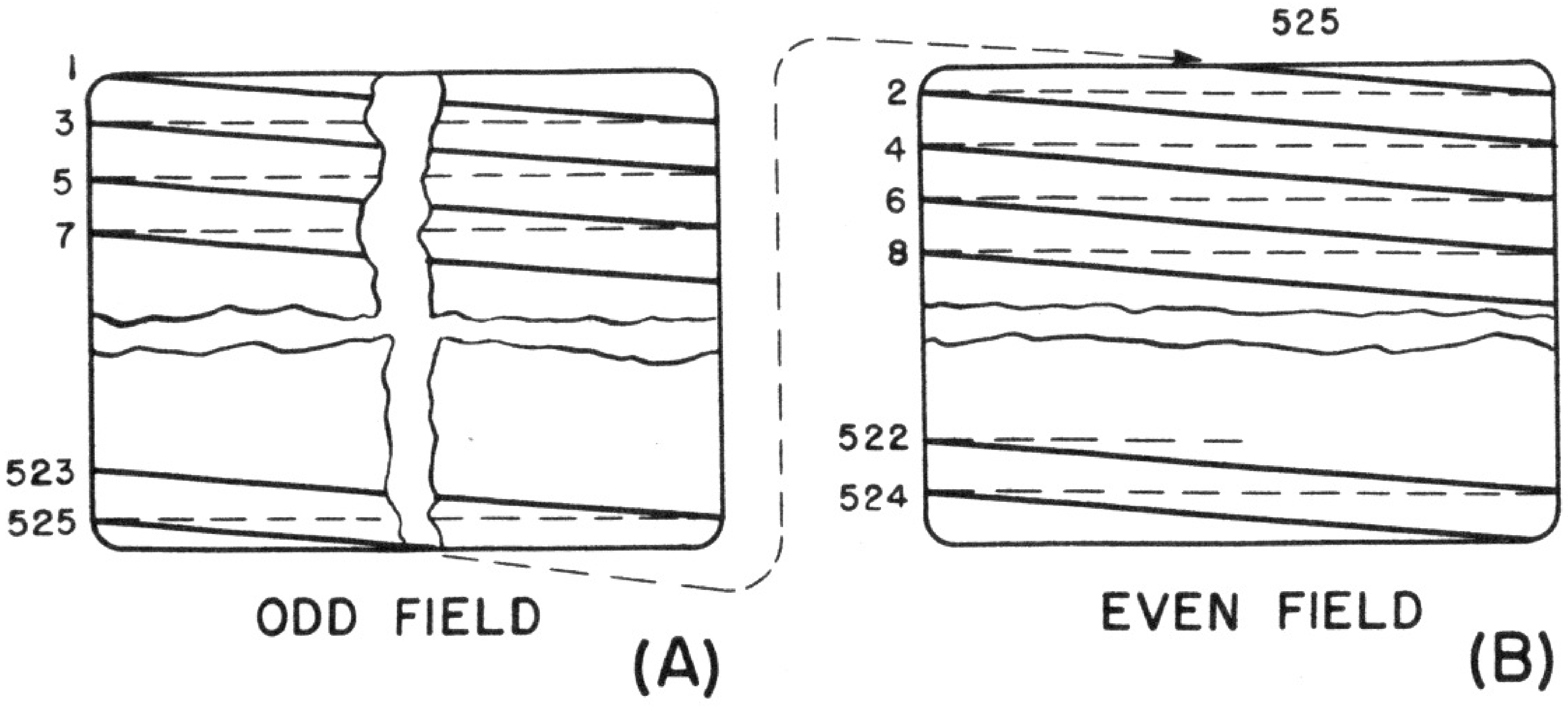

Fig. 1-3. Scanning lines as they are divided between the fields of a frame.

that surrounds the electron beam also combine into a single field which acts on the charges of the beam.

The horizontal deflection field causes the screen end of the electron beam to travel from the left-hand edge to the right-hand edge of the picture, from which point it is snapped back to the left-hand edge very rapidly, and the trip toward the right-hand edge is made again. Each advance from the left-hand edge to the right-hand edge of the picture is called a *horizontal scan* and results in a visual line called a *horizontal scanning line.*

Simultaneous with its horizontal movement, there is also active a vertical deflecting force which causes a continuous downward motion of the beam spot. This force is due to the vertical sweep deflection current. When the last horizontal scanning line has been completed at the bottom of the picture, the vertical deflection current returns the beam to the top of the picture, where the entire process is repeated again.

Every one-sixtieth of a second, 262.5 horizontal scanning lines are traced out on the screen surface. This is known as a *field.* Two successive fields complete a *frame.* When control (synchronizing) voltages are received from the transmitting station as a part of the received television signal, the horizontal scanning lines of one field of a frame are swept out in the spaces between the scanning lines of the preceding field. This results in a complete picture that is normally formed of 525 lines. Meashing the scanning lines of each pair of fields is called *interlace.*

Let us assume that the scene being televised is divided into 525 lines, uniformly spaced, one above the other. One field consists of the odd-numbered lines 1, 3, 5 . . . 525; the second field consists of the even-numbered lines 2, 4, 6, 8 . . . 524. This is symbolized in Fig. 1-3 (A) and

(B). The reference to a fractional part of a line stems from the fact that, as can be seen in Fig. 1-3(A), the last horizontal scanning line of one field ends at a point halfway across the screen, and the first horizontal scanning line of the next field starts halfway across the screen.

The electron beam is moved across the screen from the left-hand edge to the right-hand edge, and snapped back to its starting point at the left side of the screen in a total time of 63.4 μsec. This results from the fact that the frequency of the horizontal sweep is 15,750 cps or 15.75 kc. The electron beam is depressed from the top of the picture to the bottom and then brought back to its starting point again each 1/60 second, the vertical sweep frequency being 60 cps.

Sweep Voltages Are Generated in Receiver

It is important to understand that the sweep voltages are generated in the TV receiver and that the basic operation of the vertical and horizontal sweep voltage oscillators does not depend on the arrival of any TV signals at the receiver. The arrival of control, or synchronizing, signals from the transmitting station sets the vertical and the horizontal sweep oscillators accurately on frequency. This *times* the operation of the sweep oscillators so that the scanning lines of each field of each frame will be interlaced properly, and also, adjusts the operation of the sweep oscillators so that when these voltages are transformed into sweep currents, the motion of the electron beam will be in the correct time sequence relative to the beginning and the end of each horizontal line of picture information that is transmitted from the station.

Periods of Picture Information Transmission

The motion of the beam from left to right is called the *forward horizontal trace*, or the *horizontal scan*. It is the *active portion* of the line. The rapid return from right to left is called *horizontal retrace*. The downward motion from top to bottom is called the *vertical scan*; the rapid return from bottom to top, *vertical retrace*.

Picture information is not transmitted during either the horizontal retrace or the vertical retrace periods. Instead, the picture is *blanked* (beam is cut off) during these periods. This fact is important in this book because improper conditions (troubles) in sweep circuits and a faulty picture on the screen are closely related.

Sweep Current Characteristics

The deflection of the electron beam in the picture tube requires the simultaneous presence of two different-frequency sawtooth-shaped sweep currents in the deflection coils – one current of 60 cps in the vertical coils, and the other current of 15,750 cps in the horizontal coils. The waveforms of these currents are idealized in Figs. 1-4 and 1-5.

Horizontal Sweep Current

If we select Fig. 1-4 (A) as illustrative of the horizontal sweep currents, then part *a-b* is responsible for the forward trace, or scan – that is, the movement of the spot from the left side of the screen to the right

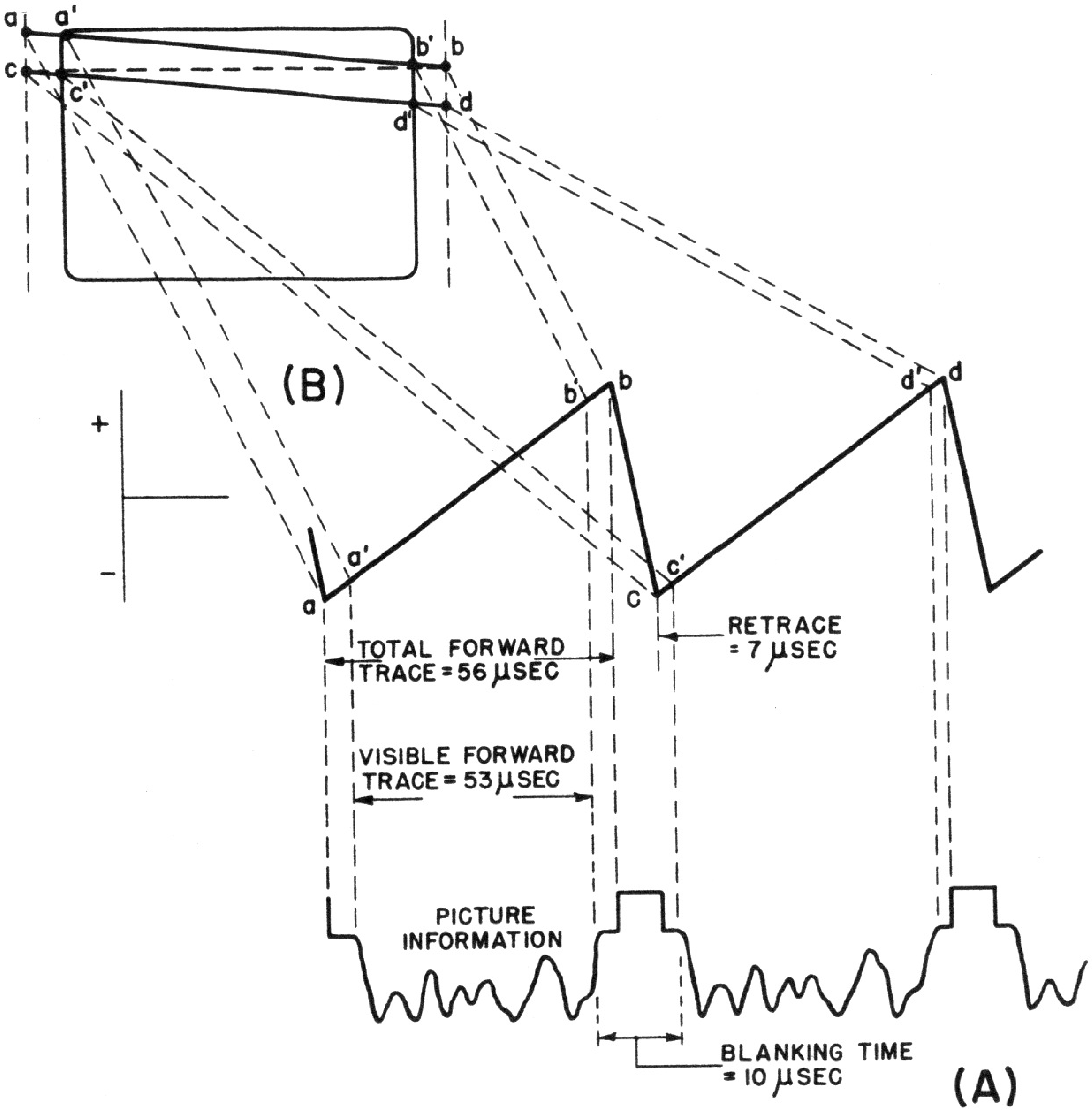

Fig. 1-4. Characteristics of horizontal sweep and sync.

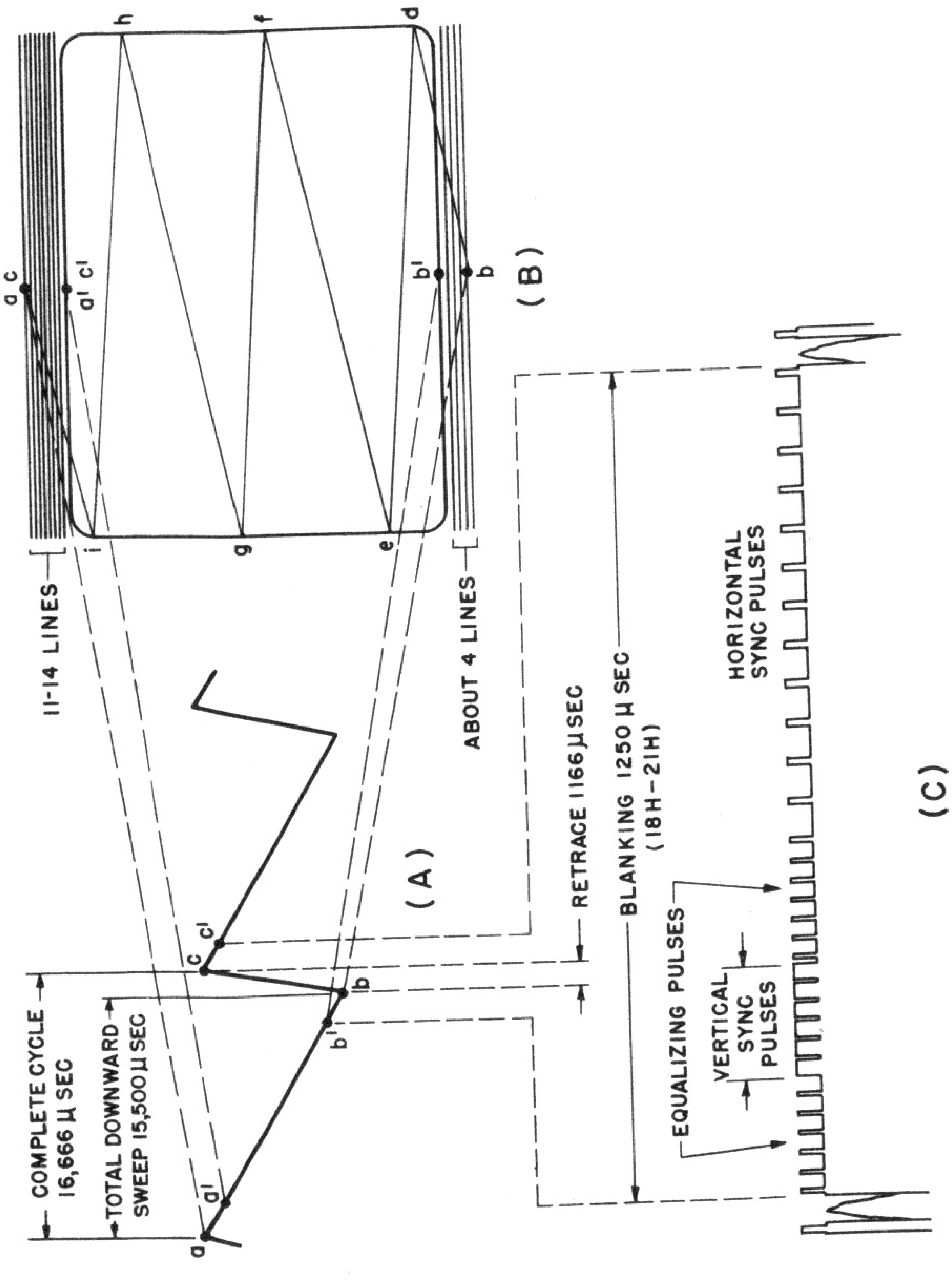

Fig. 1-5. Characteristics of vertical sweep and sync.

side; part *b-c* is responsible for the retrace, or the rapid return of the beam from the right side to the left side of the screen. This is shown in Fig. 1-4 (A) (B) by the lines *a-a, b-b,* and *c-c* which join the sweep current representation in (A); while (B) illustrates the beam movement across the picture-tube screen.

As indicated in the illustration, the total horizontal forward trace, or scan, interval is 56 μsec, and the retrace interval is 7μsec. This gives the total horizontal sweep cycle a period of 63 μsec.

However, the movement of the beam across the screen surface is not visible for this entire period, certainly not during the retrace. If it were, it would interfere with the display. For that matter, it is not even visible on the tube screen for the full 56 μsec that it takes to move across the entire screen surface. One of the signals received from the transmitting station is the *horizontal blanking signal.* This appears after each line of picture information and lasts for a period of 10 μsec, as shown beneath the sweep current waveform in Fig. 1-4.

The net result is that the visible portion of the forward horizontal trace due to the horizontal sweep current is seen for only 53 μsec, as shown by the segment *a′-b′* in Fig. 1-4 (B). In other words, the horizontal blanking signal becomes effective about 2μsec before the line is completed, remaining in force during the entire retrace period and for about 1 μsec after the next horizontal scanning line has started. The sum of these periods is 10 μsec. This is shown by the lines joining the points *a′-a′*, *b′-b′*, and *c′-c′* in (A) and (B) of Fig. 1-4. It is seen that the retrace portion of the sweep current does not result in a visible trace on the screen because, during this period of beam motion, the beam is blanked out. Attention is called to the time relationship between the retrace portion of the horizontal sweep current and the blanking interval. It is to be noted that the blanking time *exceeds* the horizontal retrace time. When this condition prevails, the beam is at the correct point at the left edge of the screen to begin each successive horizontal scanning line of picture information. This point is stressed because it influences such troubles as horizontal fold-over. (See Chapter 4 for further discussion of this.)

Reference to Fig. 1-4 (B) shows that the effect of blanking is to reduce the dimensions of the visible portion of the beam motion relative to the full movement of the beam horizontally. The segments *a-a′*, *b-b′* of each horizontal scanning line are lost because of the horizontal blanking.

The idealized representation of the horizontal sweep current shown in Fig. 1-4 (A) is a linear sawtooth. The current rises at a constant rate from its peak negative value to its peak positive value through zero as shown by *a-b*. Under ideal conditions, it falls in the same manner from its peak positive value to the peak negative value through zero in about 11 percent of the time of the complete horizontal sweep cycle.

Vertical Sweep Current

The vertical deflection sweep current is idealized in Fig. 1-5 (A). The complete sweep cycle is made up of the segments *a-b-c*. Figure 1-5 (B) shows the motion of the electron beam in the vertical deflection process. In the absence of any horizontal deflection the beam would trace out a single vertical line such as *a-b*, but in the presence of horizontal deflection, the vertical movement of the beam is modified by the side-to-side motion. At the beginning of the vertical sweep cycle, the beam is near the top of the tube; at the end, it is near the bottom edge of the tube.

The portion *a-b* of the vertical forward sweep current, shown in Fig. 1-5 (A), accounts for the downward motion *a-b* of the beam, in Fig. 1-5 (B). The portion *b-c* of the sweep current shown in Fig. 1-5 (A)– that is, the vertical retrace – accounts for the beam movement *b-d-e-f-g-c* in (B). The side-to-side movement of the beam as it is advancing upward from the bottom edge of the tube screen is due to the presence of the horizontal deflecting force – both forward trace and retrace – while the vertical retrace is taking place. The number of such side-to-side excursions is determined by the number of horizontal sweep cycles completed during the vertical retrace period. The three shown are strictly symbolic. As a matter of fact, the right-to-left excursions of the beam during vertical retrace, symbolized by *d-e*, *f-g* and *h-i* in (B), are not visible on the screen because the beam is blanked by the horizontal blanking voltage.

As indicated in Fig. 1-5, the whole vertical sweep cycle time is 16,666 μsec. This corresponds to 60 cps. The vertical forward trace beam motion (downward) or the segment *a-b* of the sweep current, occurs in about 15,500 μsec; and the vertical retrace time (*b-c* in A) is 1166 μsec, or 0.07 (7 percent) of the complete vertical sweep time. Adding the time of the whole forward trace and the retrace gives the total vertical sweep time of 16,666 μsec.

As is true during the horizontal deflection of the beam, the full vertical sweep movement of the beam is not visible on the screen; if it were, it would interfere with the picture display. To prevent this, a vertical blanking signal is applied, which effectively extinguishes the beam during the time that it makes its side-to-side excursions while being returned from the bottom to the top of the screen. As a matter of fact, the vertical blanking action starts just *before* the beam reaches the bottom of the screen and lasts for a short time interval *after* the beam has reached the top of the screen and the vertical deflection downward has begun. In truth, the vertical blanking is not complete. If the contrast is turned down and the brightness control is advanced, the vertical retrace lines in a synchronized raster will be visible.

This is indicated in Fig. 1-5 (A) by the vertical blanking interval of 1250 μsec. It is seen to begin before the vertical retrace starts (b') and to last into the region after the vertical forward trace has begun (a' and c'). Thus, the so-called *visible portion* of the vertical sweep action on the beam is between a'-b' and begins again at c' of the second sweep cycle. Hence, if a-b in Fig. 1-5 (B) represents the full vertical sweep (downward) of the electron beam, the result of the vertical blanking is to reduce the visible portion to that between a'-b'. This means that some of the horizontal scanning lines are actually blanked at the top of the screen and at the bottom of the screen.

The RETMA standards for TV broadcasting allow some latitude for the vertical retrace interval, and the number of horizontal scanning lines that are blanked out in a field vary between 18 and 21. This may be modified somewhat in the receiver, depending upon the characteristics of its sync and deflection sections.

It is interesting to note the signals that are present during the time that the vertical retrace exists, and shortly before the retrace begins and after it ends – in other words, during the vertical blanking period. These are shown in Fig. 1-5 (C). But this is not picture information – it is beam control information which affects the operation of the sweep oscillators.

Under ideal conditions, the last line of picture information for the horizontal scanning line near the bottom edge of the picture-tube screen is transmitted just before the vertical blanking takes place. This is shown at the left side of (C). Then begins the series of equalizing pulses, vertical sync pulses followed by six more equalizing pulses, and finally, a series of horizontal sync pulses.

It is to be noted that the last line of picture information is completed *before* the beam arrives at the end of its motion, near the bottom edge of the picture tube, as shown by points b' on the representations of the vertical sweep current and the vertical displacement of the beam. Then the series of equalizing and synchronizing pulses act on the vertical and horizontal sweep generators so that, after the beam is moved back upward, the new cycle of vertical deflection action starts at the proper instant at the *top* of the tube with the start of the horizontal forward trace action at the same instant. Figure 1-5 (B) illustrates that frame of a field in which the first horizontal scan begins at the middle of the tube screen along the top edge.

Attention is called to the horizontal synchronizing pulses which are applied to the horizontal sweep oscillator after the last equalizing pulse has been completed and before any picture information is sent. The horizontal oscillator is functioning during this period (as well as during the periods of the equalizing pulses and vertical sync pulses) and applying horizontal deflection to the beam, but nothing is visible because the beam is blanked. Then, after the completion of this horizontal sync pulse chain, the beam is at point *a′-c′* in (B), and picture information is transmitted. Picture information is not sent during any of the vertical blanking interval.

The relationship between the beginning of the vertical retrace and the end of picture information, as well as the end of the vertical retrace and the beginning of transmission of picture information (as shown in Fig. 1-5), is very important because it influences foldover troubles in the vertical direction. The vertical retrace must be completed within the vertical blanking period. This is the reason for the vertical blanking period exceeding the vertical retrace period. Even so, the timing of the retrace may not always be right. This subject receives attention in Chapter 3.

Interdependence of Sections of Complete Sweep Systems

Figure 1-1 (A) (B) indicates a definite association between the sweep oscillators and the sweep output systems. The arrows leading from the oscillators to the output systems imply that the sweep signals received from the oscillators are responsible for the sweep currents which we explained in connection with Figs. 1-4 and 1-5. The degree to which is true and the respects in which it is not warrant some explanation in this review because of what follows in subsequent chapters.

Vertical Sweep Oscillator

The vertical sweep oscillator is the basic source of the 60-cps vertical sweep signal. Its output reaches the vertical deflection coil via the vertical output system, it being understood that some waveshaping occurs between the output of the oscillator and the input of the vertical output tube. This is explained later. In the meantime, it is well to realize that *both the forward trace and the retrace portions* of the vertical sweep current are directly attributable, in most instances, to the *transfer* of the vertical sweep voltage from the oscillator to the deflection coils via the vertical output tube system. The exceptions will be described later.

The fundamental operation of the vertical oscillator does not require the presence of a television signal from the transmitter. The vertical oscillator will function as a *free-running generator* of a substantially sawtooth waveform voltage without any aid from any external system. Its frequency will approximate the 60 cps required by the vertical deflection coil, but it will not be sufficiently accurate to time properly the movement of the electron beam in the vertical direction. Accurate timing of the vertical deflection process requires precise frequency control of the vertical oscillator. This demands the injection of the various control pulses associated with the vertical sweep system, which are derived from the TV signal received from the transmitting station.

Vertical Output System

In order that deflection take place, it is necessary that the signal generated in the vertical sweep oscillator be passed onto the vertical sweep output system but it is not necessary, just for deflection, that the signal from the oscillator be frequency-controlled by the synchronizing pulses or that it be controlled by the equalizing pulses. Deflection will take place, but there will be neither individual fields nor interlacing action, because the free-running vertical oscillator is producing a continuous train of sawtooth sweep voltages which follow one another in a sequence dictated by the frequency stability of the oscillator. The vertical depression of the beam and retrace are in accordance with the shape of the sawtooth voltage transferred from the oscillator to the output tube and from the output tube to the vertical deflection winding.

Horizontal Sweep Oscillator

The horizontal sweep oscillator is the source of the 15,750 cps horizontal sweep voltage. But unlike the vertical sweep system, the horizontal sweep oscillator is *not* the source of the complete cycle of sweep voltage which results in the sweep current in the horizontal deflection windings. The 15,750-cps sawtooth signal from the horizontal sweep oscillator initiates a series of actions in the horizontal sweep output system, and the end result is the horizontal deflection sweep current. This may seem strange but it is true nevertheless, as is described later.

Like the vertical sweep oscillator, the horizontal sweep oscillator will function without any aid from signals received from the TV transmitter. In other words, it will function without any horizontal synchronizing pulses being injected into the oscillator. However, under such circumstances the frequency of the oscillator will not be that which is required for properly timing the horizontal movement of the electron beam in the picture tube, although there will be deflection of the beam.

In order that the horizontal scanning action be exactly in synchronism with the corresponding action taking place in the camera tube, it is essential that the horizontal sweep oscillator frequency be controlled by the synchronizing pulses and by other control means used in the receiver.

Horizontal Output System

The horizontal output system requires the signal from the horizontal sweep oscillator in order that deflection take place in the horizontal direction. This is so, regardless of whether the horizontal sweep oscillator is on or off frequency. The horizontal scanning action will not be right if the horizontal sweep frequency is incorrect, but scanning will take place nevertheless.

A very interesting detail is that, while the signal from the horizontal sweep oscillator is a primary requirement for functioning of the horizontal output system (hence, deflection), *the complete cycle of horizontal sweep current is not an amplified version of the output from the horizontal sweep oscillator.* Only part of it is – the remainder *originates* in the horizontal output system. This idea, which may be momentarily confusing, is explained fully in Chapter 4.

The Deflection Yoke

The deflection yoke is composed of two sets of coils: one for vertical deflection, and one for horizontal deflection. The function of each coil set is to convert the deflection signal from the sweep output system to which it is connected into desired variations of a magnetic field which deflects the electron beam in the picture tube.

To produce such a magnetic field, each deflection coil must have inductance. It is the *current through the coil,* rather than the voltage across it, which produces the desired magnetic field. This is important, because as will now be shown, sometimes the voltage waveform is not the same as the current waveform.

To explain exactly why this is so, certain fundamentals of inductive circuits are reviewed in the following pages. These fundamentals also help explain the difference in the input and output waveshapes of the horizontal output stage and its relation to the high-voltage rectifier circuit.

Rate of Change of Sweep Currents

In Fig. 1-5 (A), the forward trace portion *a-b* of the vertical sweep current occupies 15,500 μsec and the retrace occupies 1166 μsec. In the horizontal system the corresponding time intervals are 56 and about 7 μsec, respectively. Although these intervals have many important aspects, one is especially significant. This is the very much higher *rate of change* of the horizontal sweep current. It changes from its negative peak value to its positive peak value in 56 μsec, whereas the vertical sweep current takes almost 278 times as long. Likewise, the retrace portion *b-c* of the horizontal sweep current is completed in 7 μsec, whereas in the vertical sweep current this time interval is very much greater, about 166 times longer. A simple set of figures will illustrate the point. Let us assume that the peak-to-peak current change in the vertical deflection coil is 400 ma, or 400,000 μa. Using 15,500 μsec as the duration of the forward trace, the current changes at a rate of 25.6 μa (0.0256 ma) per μsec; or roughly, 0.26 ma per 10μsec, a more convenient number to work with. During the retrace portion, the total *change* in current is the same, except that now it occurs within 1166 μsec. Therefore, the rate of change of the current is much higher, actually 13 times higher, because it takes place in one-thirteenth of the time (15,500/1166). This amounts to 320 μa (0.32 ma) per μsec, or 3.2 ma per 10 μsec.

The situation is similar for the horizontal sweep current, although the same numerics do not apply. The peak current values are much greater, and the time durations for the forward and retrace intervals are very much less. The ratio between the forward and the retrace period is less, being about 1:8 for the horizontal deflection coils compared with the 1:13 for the vertical deflection coils.

Assuming for the moment that the peak current in the horizontal deflection coils is 840 ma (840,000 μa), the complete forward trace change takes place in 56 μsec, or at a rate of 15,000 μa (15 ma) per microsecond, or 150 ma per 10 μsec. The rate of change for the retrace is much higher, being 840,000/7 or 120,000 μa (120 ma) per microsecond.

The above references to the rate of change involve an *average* value on the basis of total microsecond and current units for a complete interval. The sweep current need not change at the same rate at each instant during the interval of time. When it does so, the rate of change is *constant* and the waveform is *linear*. When shown graphically, a sawtooth waveform of current, which changes at a constant rate, appears like those in Figs. 1-4 (A) and 1-5 (A). The changing quantity is represented by a straight line whose slope is proportional to the rate of change.

Any departure from a straight line in the forward and retrace parts of a sawtooth waveshape (of voltage or current) indicates a departure from linearity, and also from a constant rate of change. Such nonlinearity in either the vertical or horizontal sweep currents, or in both, would materially impair the appearance of the picture on the screen. Linearity need not be perfect, but must be nearly so for good receiver performance.

Current and Voltage Relations in an Inductance

Consider a coil, which has negligible resistance. When a current is passed through it, the voltage across it is equal to the self-induced voltage due to the current. This self-induced voltage exists only when the current is changing; it is zero when the current is fixed, no matter how great this current may be. The magnitude of the self-induced voltage is proportional to the *rate of change* of current, and its direction (polarity) is such as to oppose that change. Thus, if the current increases positively, the self-induced voltage is negative and opposes the current. If the positive current is reduced, or is increased negatively, the self-induced voltage is in a direction to tend to keep it more positive. This opposition to a change of current is called the *inductive reactance* of a coil. For alternating current, whose instantaneous value is continuously going through changes, the reactance is part of *impedance*, and with resistance, helps to limit current flow.

The current-voltage relation of a pure inductance is described by the following simple formula:

$$e = -L \frac{di}{dt}$$

where e = self-induced emf in volts

L = self-inductance of the coil in henries

$\frac{di}{dt}$ = rate of change of current in amperes per second

The inductance cannot be anything but positive. The minus sign means, then, that the *rate of change of current* and the *self-induced voltage* are always in opposite directions. The *change* of current must be distinguished from the *value* of the current, since these two things may be in opposite directions. For example, a positive current of 10 ma may drop to a positive current of 5 ma. During this change, the current remains *positive*, but the *change* of current is *negative*. In such a case, the self-induced voltage would tend to aid the current flow, although still opposing the current change.

If, in any one given case, the current changes between two fixed values in 15,500 μsec, and in another case it changes between the two same values in 1166 μsec, the ratio di/dt in the first case is one-thirteenth as great as in the second case.

The sawtooth sweep current fed to the deflecting coils in a TV receiver is assumed to be linear, and in that event, the rate of change in the current is the same, instant after instant. The ratio di/dt therefore remains constant during the completion of, say, the forward trace portion of the sweep current cycle. We said that Fig. 1-5 (A) showed this current to change in linear fashion during both forward and retrace periods. We also said that it changed 0.26 ma (or 260 μa) per 10 μsec; hence

$$\frac{di}{dt} = \frac{260}{10} = 26 \text{ amp per sec.}$$

Therefore, in this relationship, since the current changes at a constant rate, di/dt remains constant until the forward trace is completed. The same is true during the retrace portion of the sweep current cycle — although there, because the time interval is smaller for the same current change, di/dt is much greater. The relationship between the self-induced voltage across a deflection coil of negligible resistance and the current through it can be shown graphically, as in Fig. 1-6.

The inductance of the coil and the rate of change of sweep current just after point *a* set the level V_1 of the self-induced voltage along *a-b*. Inasmuch as the rise in sweep current between points *a* and *b* occurs at a *constant rate,* the self-induced voltage V_1 remains constant between *a* and *b*.

At point *b* on the current waveform, the retrace portion of the cycle begins. The new rate of current change, represented by the slope of the line *b-c,* sets the new level of self-induced voltage. The instantaneous change of di/dt at point *b* results in the abrupt change *b-b′* of the self-induced emf.

The change in sweep current variation during the retrace portion *b-c,* as compared with that from *a* to *b,* represents a *change in direction of the rate of current change.* Hence, the direction of self-induced voltage also changes, going from the positive V_1 to the negative V_2. The self-induced voltage V_2 is now negative because the current change is in the negative direction. V_2 is much greater than V_1 because the *change* in

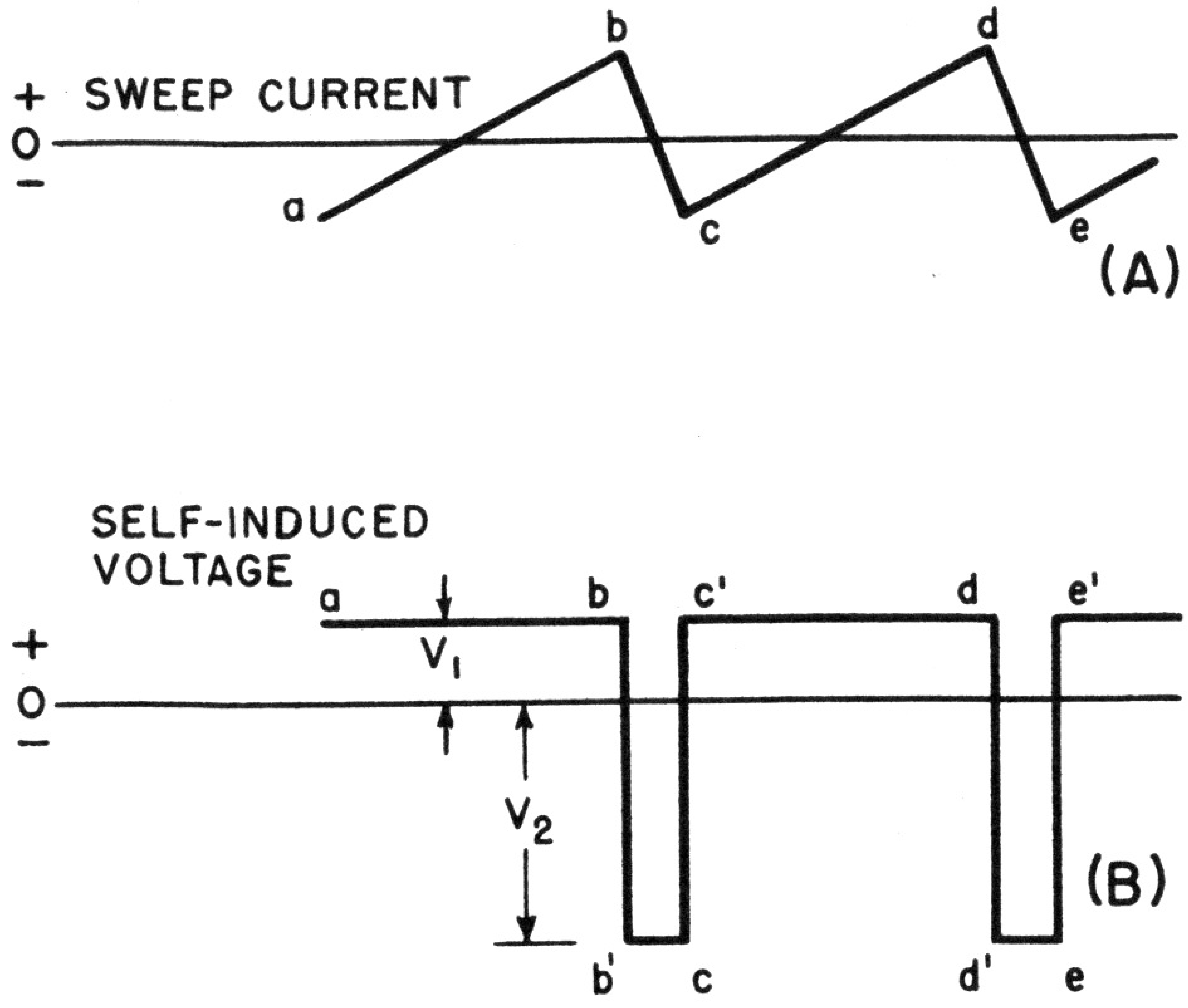

Fig. 1-6. Graphs of (A) sawtooth current, and (B) self-induced voltage for a coil with negligible resistance.

sweep current per unit time from *b* to *c* is much greater than that from *a* to *b*. Since this rate of change is constant from *b* to *c*, the voltage V_2 remains constant along voltage line *b′-c*.

When the sweep current has completed its change from *b* to *c*, and now starts the forward trace again, the self-induced voltage again changes direction, rising from *c to c′*. The level of the self-generated voltage above the zero line in the positive direction is set at the same value as before and the whole process repeats itself.

The Inductive Voltage "Kick"

Several very interesting practical considerations arise from the illustration in Fig. 1-7. To begin with, it is easy to see that the shorter the over-all time interval of the retrace portion (*b-c*) of the sweep current cycle relative to the forward trace portion (*a-b*), the greater will be the peak amplitude of the self-induced voltage. In fact, if we compare two retrace intervals, such as one of 1166 μsec and another of 7 μsec (and assume not too greatly different over-all values of sweep current), the rate of change of the current during the shorter retrace time will be very much higher; likewise, the momentary coil voltage self-generated during that time will be very much greater in amplitude (assuming approximately equal inductances). This is a practical case and will receive further mention later.

When comparing the two levels of emf self-generated in a coil under the conditions described, it is not unusual to speak of the high self-induced voltage during the short retrace period as an *inductive voltage kick*. This distinction is made to distinguish between the two levels of

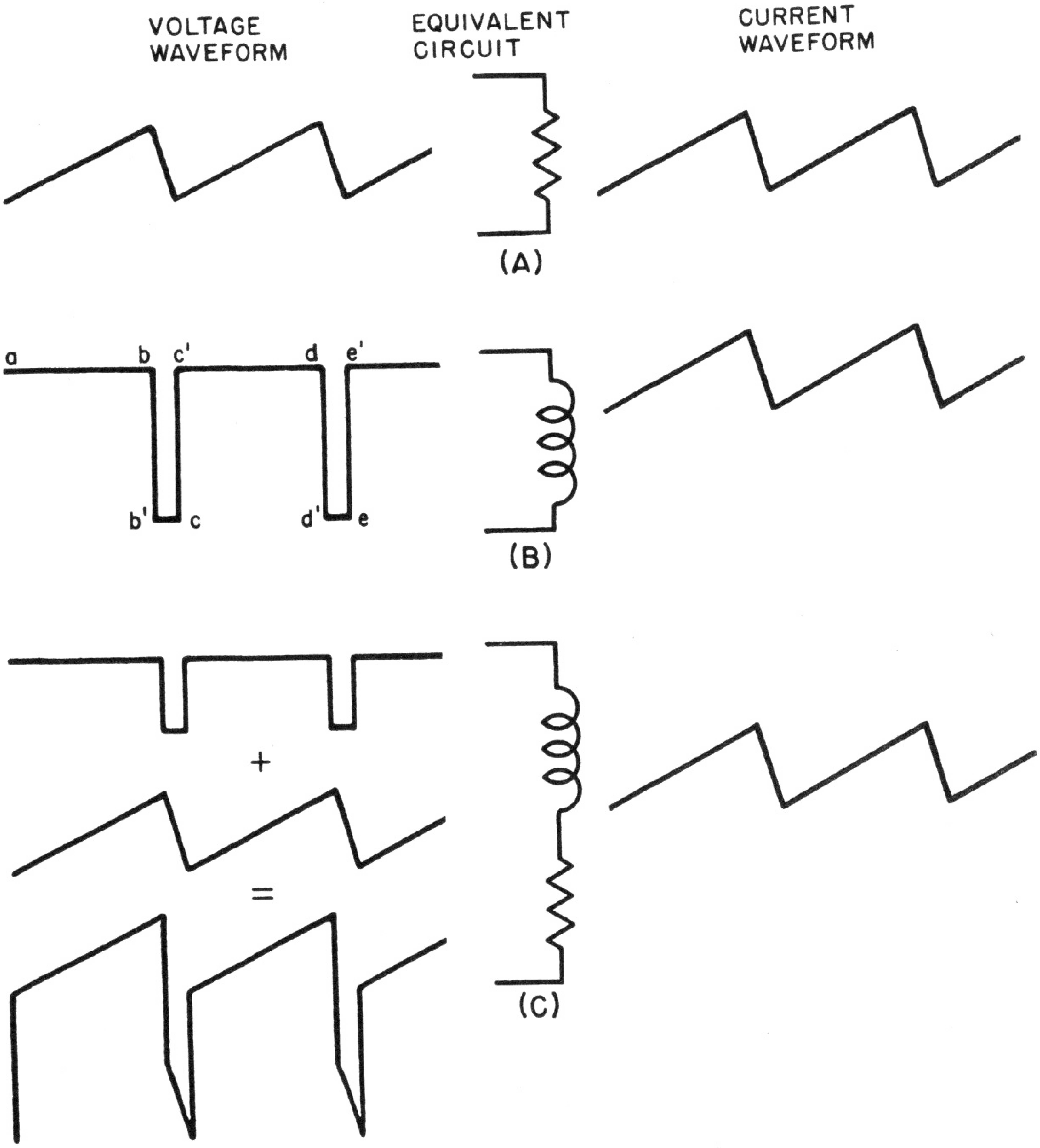

Fig. 1-7. Demonstration of why a special trapezoidal waveform voltage must be applied to the horizontal deflection coil to produce sawtooth current. The voltage for resistance alone (A) is added to that for inductance alone (B) to result in trapezoidal waveform (C).

self-generated emf during the two portions of the sweep current cycle, which are due to the difference in amplitudes. The term is akin to the commonplace reference to the inductive kick experienced when a sudden change in current occurs in a high-inductance component, or when the current is abruptly cut off or changed in direction.

What we are leading up to is that the inductive kick in voltage occurring during the retrace sweep interval is encountered in deflection yoke windings in vertical and horizontal sweep circuits. Their peak amplitudes are not alike because the rates of change of the currents are not the same; neither are the electrical designs of the two sets of coils alike. But the momentary kick in voltage does take place, and it can approximate 300 to 400 volts across the vertical deflection winding and from 1000 to 2500 volts across the horizontal deflection windings.

The very high self-induced voltage generated in the horizontal deflection winding is put to good use, whereas, in the vertical output system, the sole objective is to minimize its effects. The distruptive powers of the self-induced voltage are just as great as any other voltage of comparable value. It will puncture a capacitor just as completely as a voltage of corresponding value secured from a transformer.

Development of a Sawtooth Current in Deflection Coils

The need for a linear sawtooth current in the deflection coils has been discussed. The problem is how to attain this type of current waveform. The difficulty arises from a number of conditions. First, a deflection coil is an inductor type of component; it displays the property of inductance. Second, it displays the property of resistance, because the coil is wound with wire, and wire has resistance. These two properties display different effects on the control of current. Inductance involves a self-induced voltage and a difference between voltage and current waveforms. Resistance, on the other hand produces a voltage drop of the same waveform as the current through the coil.

The relation between current and voltage depends on coil design. If the design is such that the resistance predominates, then one waveform relation exists; if inductive effects predominate, then another form of waveform relation prevails. That such can happen is explained simply by the fact that wires of different conductivity may be used for the winding, hence the inductance may remain the same, but the resistance can vary widely. Different types of core material used with a fixed coil geometry can be productive of different values of inductance possessed of like values of resistance or of greatly different values of resistance.

Finally, the frequency of operation plays a very important role. Given one coil of fixed inductance and fixed resistance, the inductive effects will control the current at one operating frequency, and the resistance will control at another operating frequency.

A few examples might be helpful. Given a coil of 50 mh and resistance of 70 ohms, the coil at 60 cps is predominantly resistive. The inductive reactance ($X_L = 2\pi FL$) is approximately 19 ohms compared with 70 ohms resistance. The same coil used at 15,750 kc displays a reactance of 4945 ohms compared to the resistance of 70 ohms. Obviously, in the first instance, the inductive current is virtually negligible, whereas in the latter case it is, for all practical purposes, completely inductive. Under the circumstances each coil design presents its own individual problems.

In a TV receiver conditions of frequency and coil design are such that the vertical deflection coil is predominantly resistive while the horizontal deflection coil is predominantly inductive.

When a voltage is applied across a noninductive resistor, the current through the resistor is proportional, instant by instant, to the applied voltage. Any change in voltage causes a corresponding change in the current. The control of the current lies wholly in the property of resistance displayed by the resistor. Accordingly, any desired waveform of current may be attained in the resistor by simply applying that same waveform of voltages across the terminals of the resistor. If a sawtooth waveform current is desired, a sawtooth waveform voltage is applied across the resistor. This is illustrated in Fig. 1-7 (A).

High R and Low X_L

The application of a similar waveform of voltage across the terminals of a coil may or may not result in a sawtooth waveform of current. It depends on which of the two properties of the coil – the inductive reactance or the resistance – predominates. Whenever the resistance is predominant, to the extent that it is about three or more times the amount of the inductive reactance at a particular frequency, the behavior of the coil at the chosen frequency or lower is essentially resistive. In effect it behaves as if it were a resistance, and application of a sawtooth voltage across the coil results in an acceptable sawtooth waveform of current, as illustrated by Fig. 1-7 (A). This is done in the vertical output system, an example of which is the coil previously described as displaying an inductance of 50 mh and a d-c resistance of 70 ohms. In other vertical deflection coils, the ratings may be as low as inductance and 3.25-

ohms resistance. In this instance, the ratio between resistance and inductive reactance is more than 3:1, and the coil then behaves like a resistance.

In making these statements about the possible basic behavior of a coil being like that of a resistance, we are not overlooking the fact that the winding is not completely devoid of inductive properties. The inductive kick mentioned earlier does occur, except that its magnitude is very much less than when the coil is mainly inductive. It can produce transients, and steps are taken to eliminate it in TV receivers.

High X_L and Low or Equal R

Understandably, every coil design is not such that the inductive reactance is very much less than the resistance. The situation may be reversed, or the two properties may be equal in magnitude. What then? It becomes necessary to deal with the inductive and resistive properties of the coil separately. While this is possible in theory, it must be understood that both properties are inseparably bound to the coil. They act together, although in a different fashion. But by considering the behavior of each property relative to its effect on current-voltage relationship, we can come up with a complete applied voltage waveform which satisfies the conditions set by both the inductive and the resistive properties of the coil.

Figure 1-6 (B) shows the voltage waveform necessary for the production of a sawtooth current in a pure inductance. This is known as a rectangular waveform. Its negative peaks must be of short duration (*b′-c*), so the retrace time is small compared with the forward trace time. This relation between voltage and current waveforms is repeated, for comparison, in Fig. 1-7 (B).

Now, suppose that the coil is such that neither resistance nor reactance is small enough to be neglected. Then, for the sawtooth current to flow, the total voltage waveform must be the sum of the waveform for resistance and the waveform for inductance (Fig. 1-7 (A) and (B), respectively). How these voltage waveforms combine in such a circuit is shown in Fig. 1-7 (C). The resulting shape is known as the *trapezoidal waveform* and is very important, because it is the type of waveform necessary for horizontal deflection coil voltage, and will figure frequently in later discussions in this book.

Such waveshaping of the applied voltage is done in TV receivers in the horizontal sweep circuit, usually ahead of the horizontal output tube. The relative amplitudes of the rectangular voltage and the sawtooth voltage required in the composite voltage are determined by the electrical constants of the system in which the sawtooth current is to flow. If the resistance is greater than the reactance (but not to the extent that it makes the reactance negligible) the sawtooth voltage amplitude predominates. If the reverse is true between the reactance and the resistance, the rectangularly shaped voltage predominates in amplitude.

The waveforms shown in Figs. 1-5 through 1-8 are ideal conditions. They are approximated in practice as shown in illustrations which follow in subsequent chapters, the actual shape being determined by the requirements in the receiver. Because of the variations found in receivers, the relative amplitudes of the component voltages that comprise the horizontal sweep voltage fed to the horizontal output tube will be found to vary. Also, the particular shapes may differ from the ideal, but this is unimportant.

CHAPTER 2

BASIC VERTICAL AND HORIZONTAL SWEEP OUTPUT SYSTEMS

Both the vertical and horizontal sweep output systems exist in a variety of forms of circuitry and number of components. In this chapter we discuss the organization of components and circuit elements which is most often used, so that it can form a foundation for subsequent comments concerning other variations taken up in later chapters.

The Vertical Output System

The basic vertical output system is shown in block form in Fig. 2-1. In our definition, this system does not include the vertical oscillator. It consists of three main parts:

1. The vertical output tube.
2. The vertical output transformer.
3. The vertical deflection windings on the deflection yoke.

Circuit-wise, each of these major components may be related to a variety of other circuit elements, such as resistors and capacitors. However, these other elements are of more interest in connection with circuit functioning than with circuit organization and hence will be described in Chapter 3.

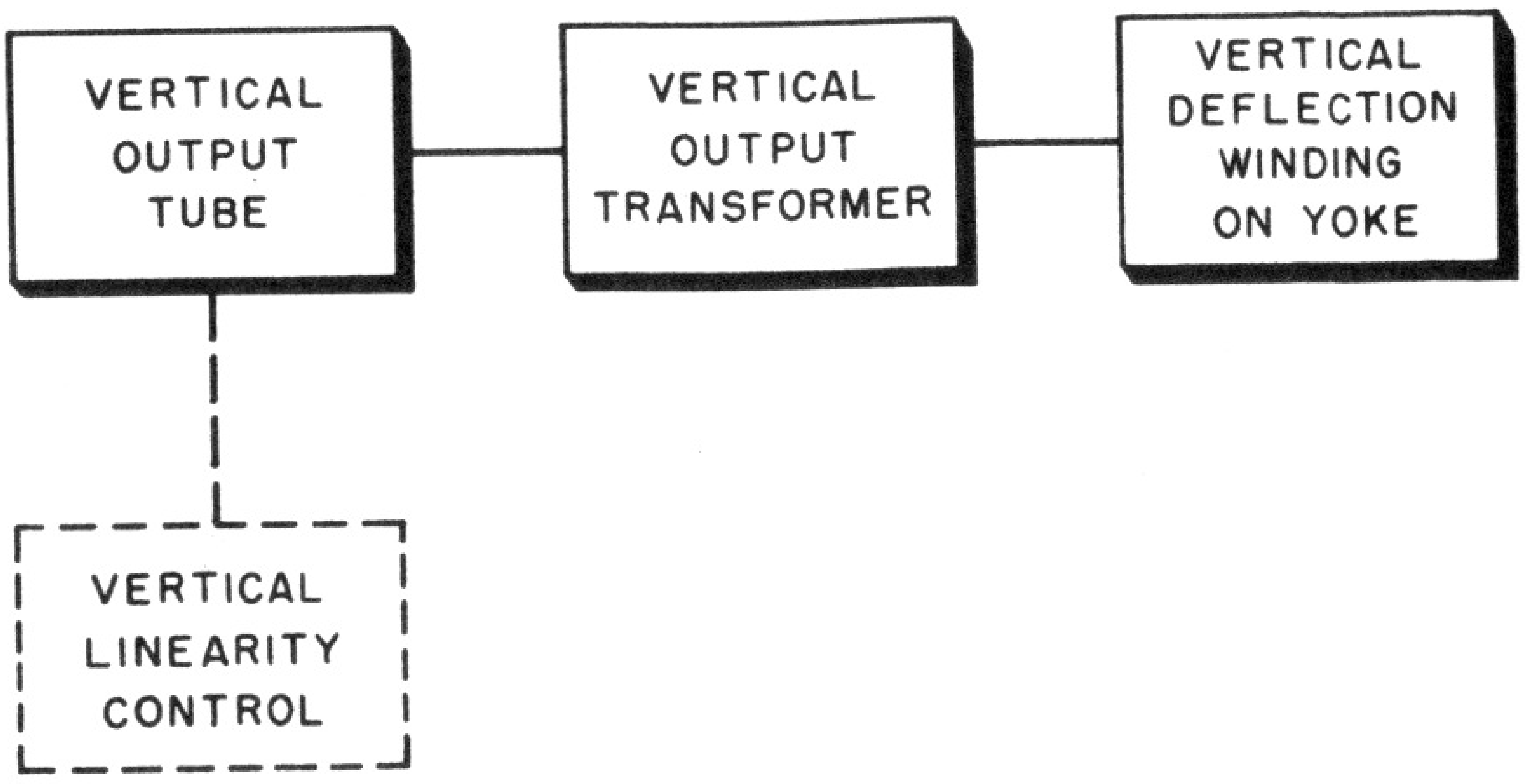

Fig. 2-1. Block diagram of basic vertical output system.

The exception to this is the linearity control, which is viewed here as a major circuit element.

Vertical Output Tube

The vertical output tube is a vacuum tube of the receiving type, generally a power triode or a power pentode, the latter being frequently used as a triode. Typical tubes used are the 6K6, 6S4, 6V6, 6W6, 6AU5, 6AV5, 6SN7, 12BH7, and 25L6. Some of these tubes are dual triodes with one section used as the vertical output tube and the other as the vertical oscillator. In other cases the vertical output tube is separate from the oscillator. A variety of tube types is used in different output stages, but they are seldom interchangeable.

Vertical Linearity Control

The vertical linearity control is a variable resistor which is usually used in the vertical output tube cathode circuit. In physical appearance it resembles the conventional composition-type control.

Vertical Output Transformer

The vertical output transformer is a very simple device. It consists of one or two windings on an iron core. In general appearance it resembles a small audio transformer. It may have two separate windings inductively coupled, or it may employ an autotransformer. The general appearance of the device can be seen in Fig. 2-2. Its main function is to match the impedance of the vertical output tube to that of the vertical

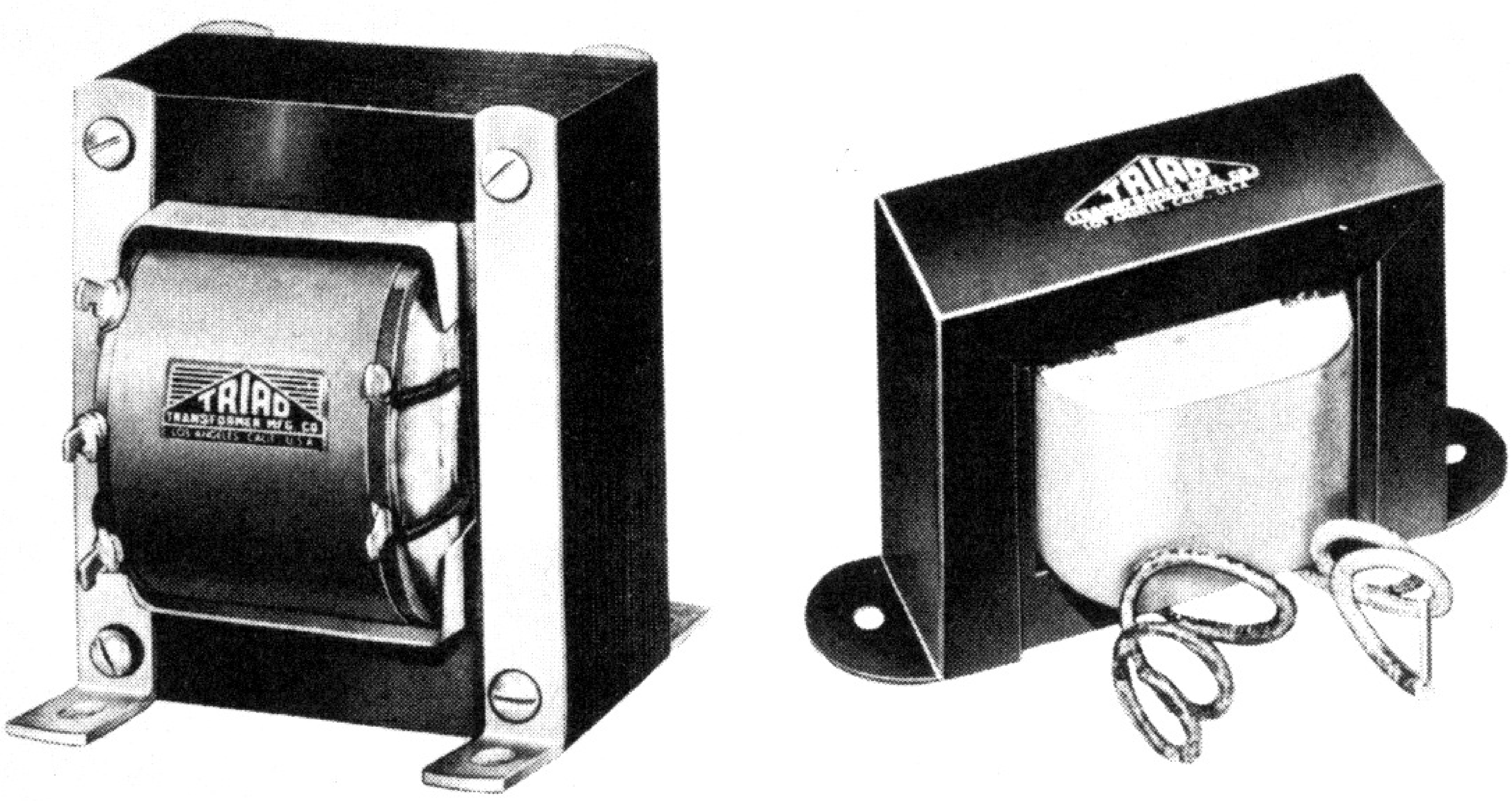

Fig. 2-2. General appearance of the vertical output transformers.

Courtesy of Triad Trans. Corp.

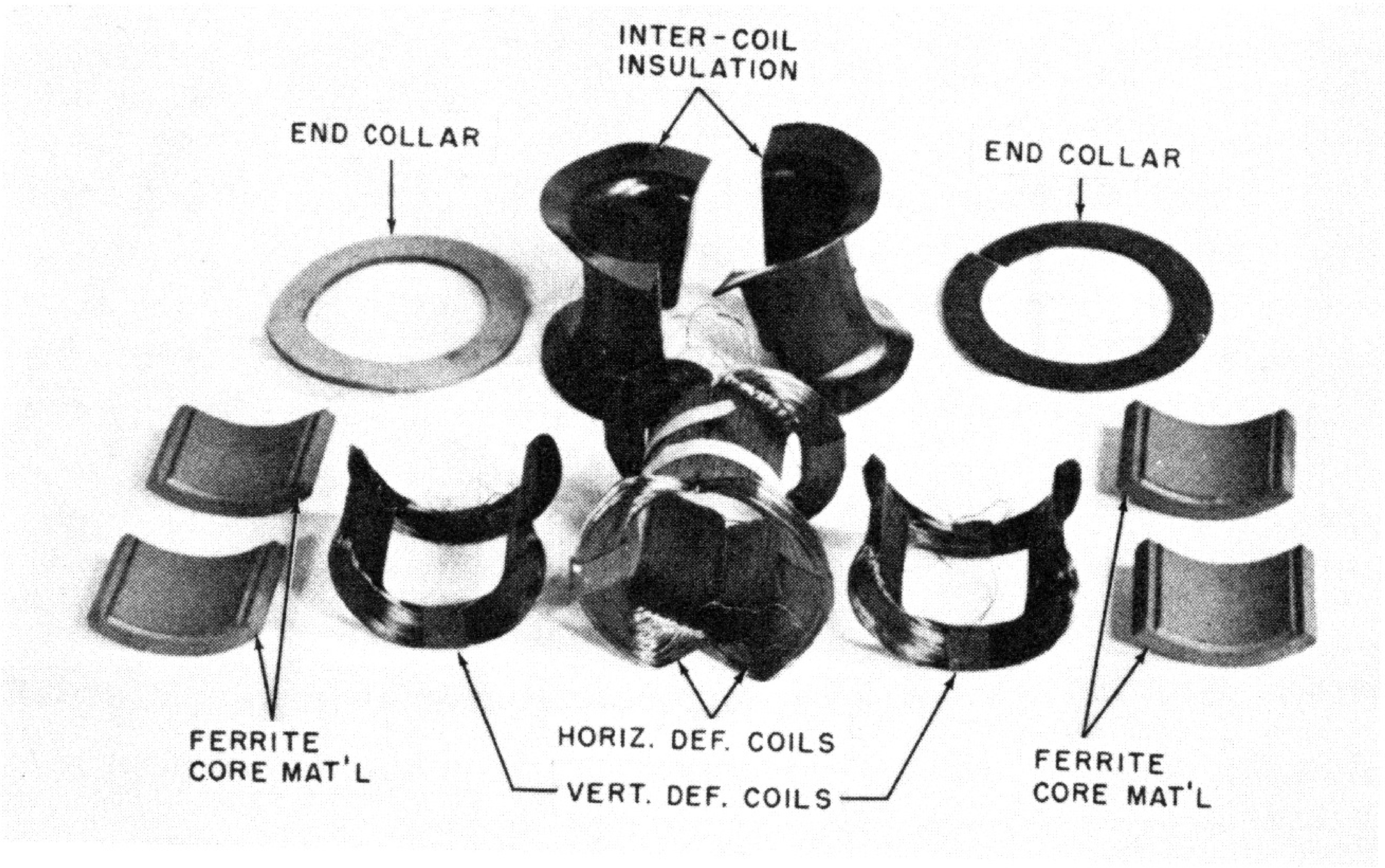

Fig. 2-3. Appearance of the windings used in a deflection yoke. *Courtesy of Todd-Tran.*

winding on the deflection yoke, thus facilitating energy transfer to the deflection yoke.

In view of the variety of tubes used as output tubes in the vertical sweep system and the different values of inductance used for the vertical winding indeflecting yokes, vertical output transformers are available in many types with different electrical ratings. Each type is designed for a given plate impedance and yoke inductance.

Vertical Deflection Winding on The Yoke

The vertical deflection winding is an integral part of the yoke, which also carries the horizontal deflection winding. Physically, it cannot be separated from the horizontal deflection winding without disassembling the entire yoke. (See Figs. 2-3 and 2-4.) The vertical deflection winding for a particular yoke (and receiver) is designed to possess a specific value of inductance, d-c resistance, and distributed capacitance, and other characteristics. Of these constants, the inductance and the d-c resistance are those used for identification purposes. The remainder are important, too, and are discussed in Chapter 6.

Inasmuch as the operating frequency is low — namely, 60 cps — the reactance of the winding is low, even when its inductance approxi-

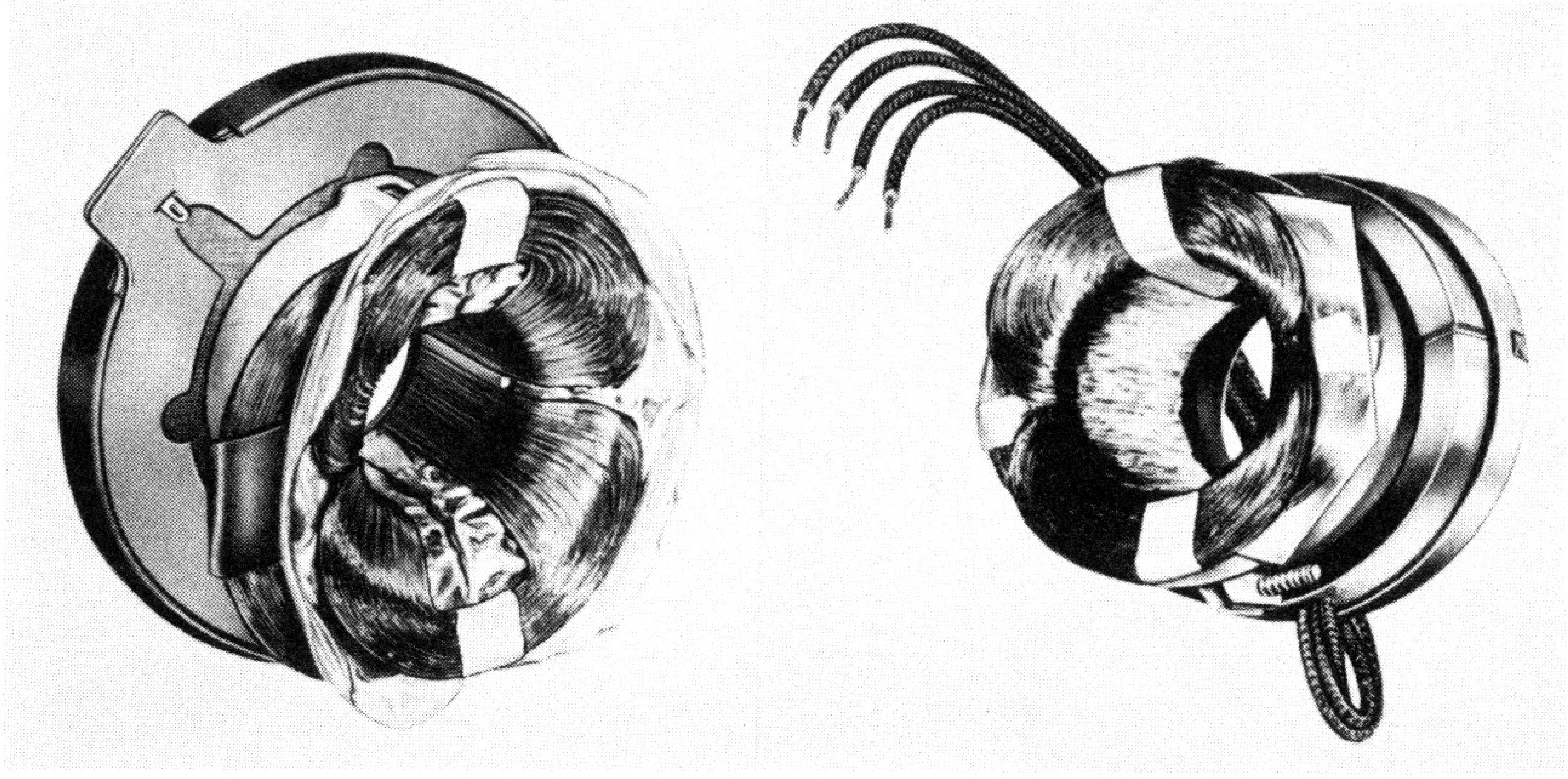

Fig. 2-4. Physical arrangement of the vertical and horizontal deflection coils.
Courtesy of RCA.

mates 50 mh. In fact, it is substantially less than the d-c resistance. A typical vertical output circuit is shown in Fig. 2-5.

Horizontal Output System

The basic horizontal output system consists of six or seven major parts, the number depending on the approach taken. The usual block diagram organization is shown in Fig. 2-6.

Horizontal Output Tube

The horizontal output tube is always one designed specifically for the purpose. Its main distinguishing characteristic is a relatively high peak plate-voltage rating, necessary because of the voltage *kick-back* from the load circuit (discussed in detail in Chapter 4). In addition, the horizontal output tube must have a high power sensitivity so it can supply the high deflection power with a minimum of grid drive voltage.

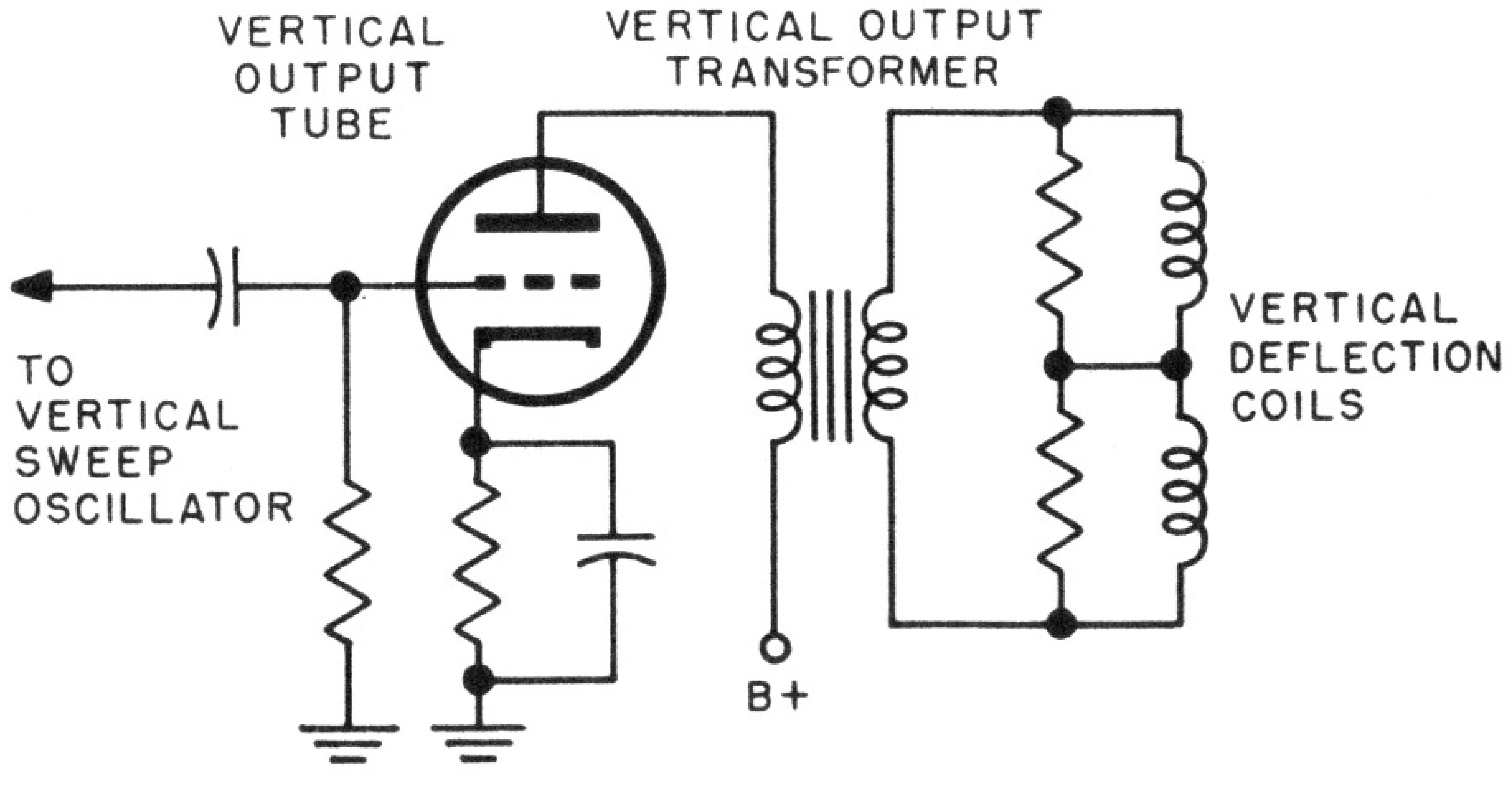

Fig. 2-5. Typical vertical output circuit.

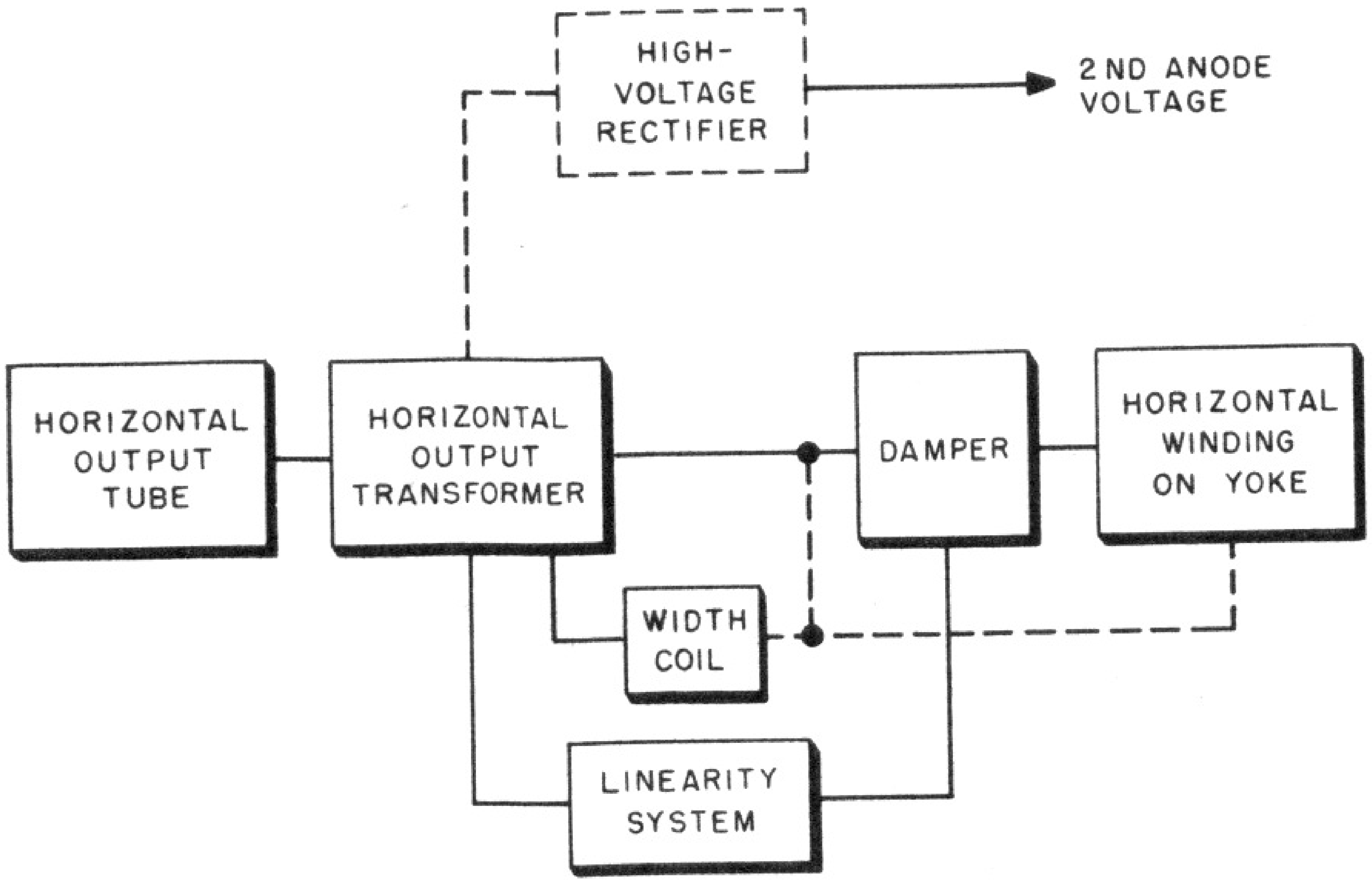

Fig. 2-6. Block diagram of the horizontal output system.

To meet these requirements, such tubes as the 6BG6, 6CD6, 6BQ6, and 6AU5 have been developed exclusively for horizontal output use. They are all *beam power pentodes,* with insulation appropriate to the high-peak plate voltage and a generous plate dissipation rating.

In some cases, the plate lead is brought out separately through a cap at the top of the tube envelope, whereas in others it is brought out through the base.

Such names as *horizontal driver, horizontal pulse amplifier,* and *horizontal deflection amplifier* are sometimes used. The author's pre-

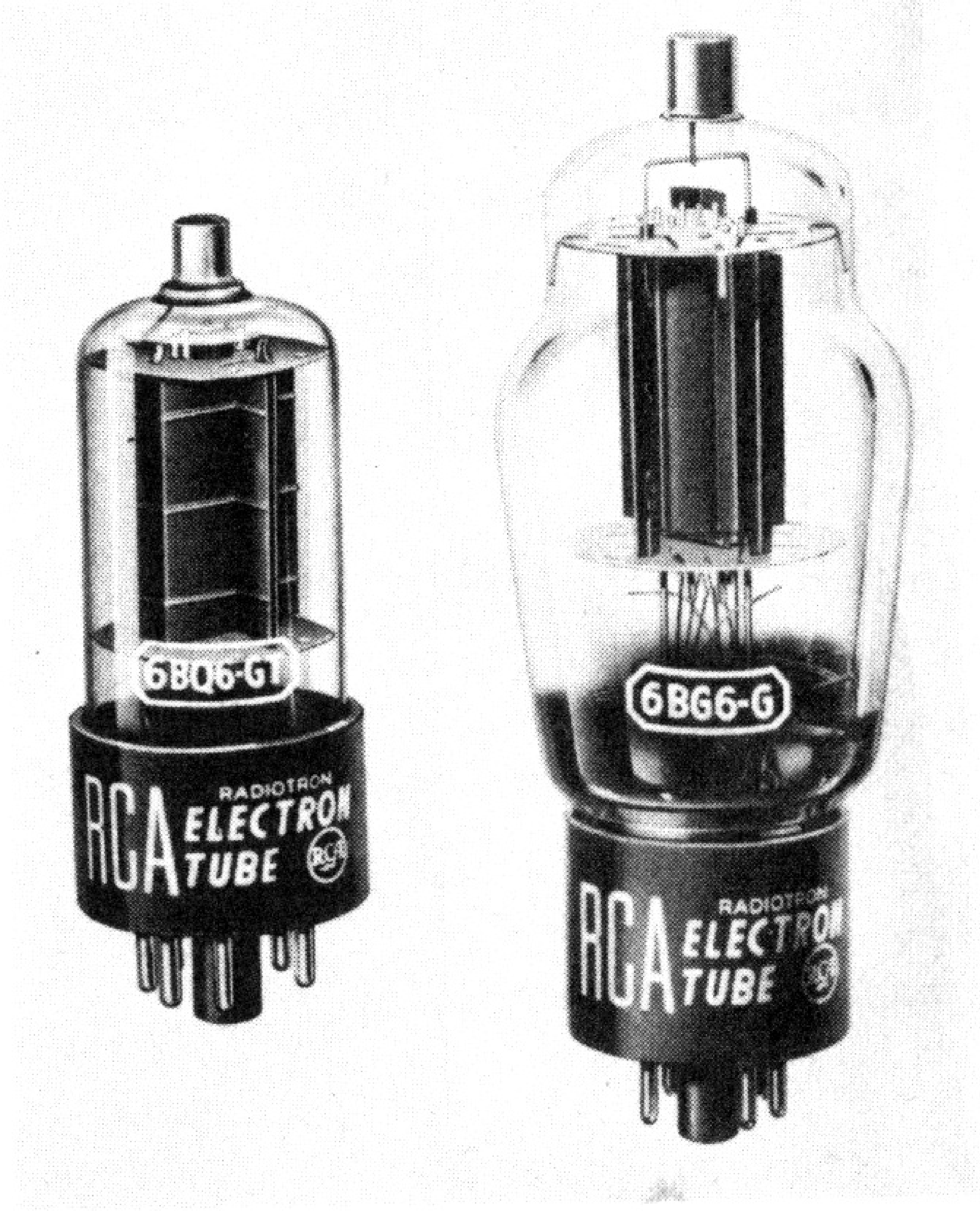

Fig. 2-7. Examples of tubes used as horizontal output amplifiers. Courtesy of RCA.

ference is for the term *horizontal output* tube, and it is used throughout this book. Examples of tubes used as horizontal output amplifiers are shown in Fig. 2-7.

Horizontal Output Transformer

The horizontal output transformer performs a variety of functions. Although these are stated separately, it must be understood that they occur simultaneously. Without in any way attempting to present them in the order of their importance, since all actions are equally pertinent, these functions are:

1. The transformer serves as an impedance-matching device matching the impedance of the horizontal winding on the deflecting yoke to the plate circuit of the horizontal output tube.
2. The transformer serves as a contributor to the supply of a high a-c voltage pulse required by the high-voltage rectifier, where the voltage is rectified, subsequently filtered, and finally, applied to second anode of the picture tube as the d-c anode voltage.
3. The transformer also furnishes a low voltage for the operation of the filament of the high-voltage rectifier. (When more than one such rectifier is used, the transformer supplies the required number of filament voltages.)
4. The transformer furnishes the sweep voltage required by the horizontal winding in the deflection yoke and, with another component, also provides for control of the horizontal-deflecting winding voltage or current.

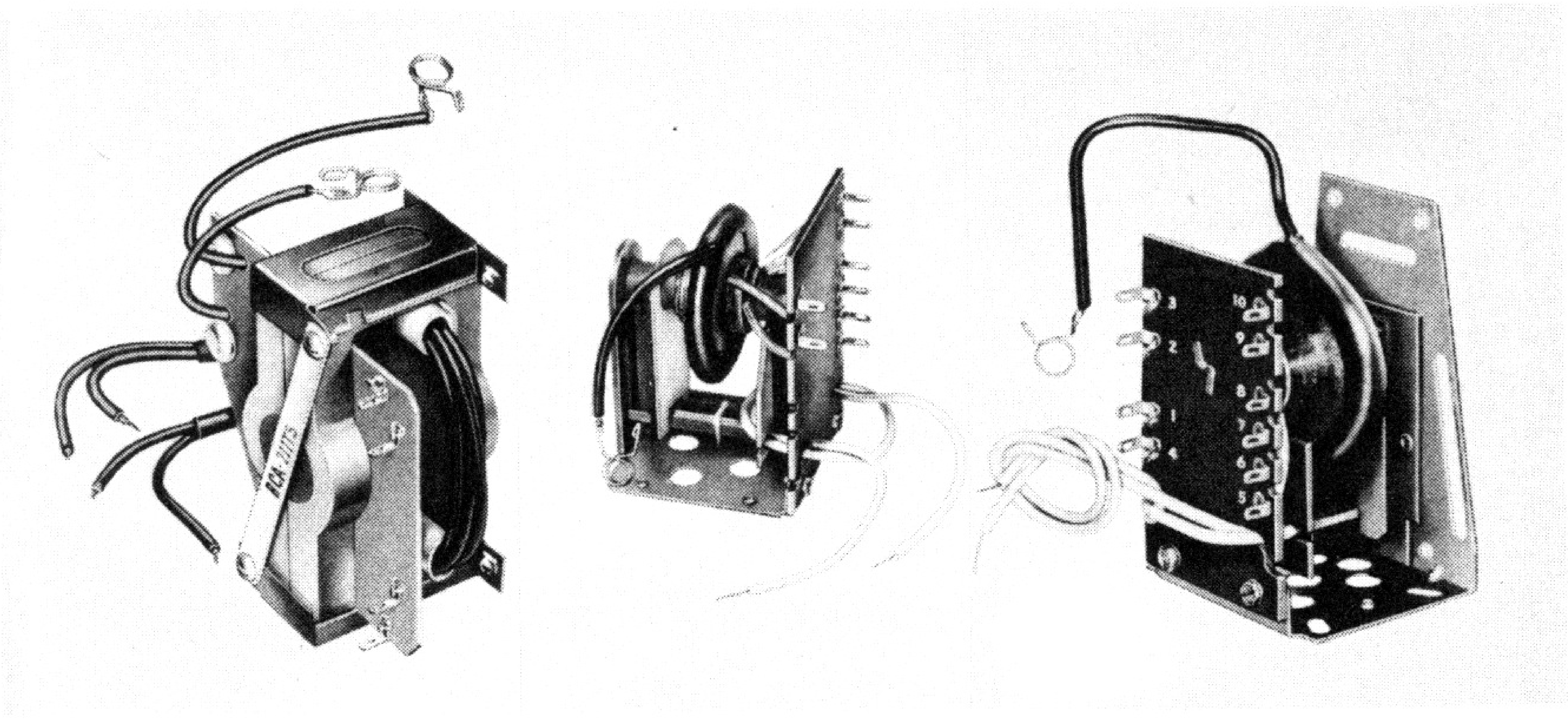

Fig. 2-8. Typical horizontal output transformers.

Courtesy of RCA.

Physically, horizontal output transformers differ in many ways; hence their outlines and dimensions vary widely. Three typical units are shown in Fig. 2-8; others appear later in this book.

Width Control

Another element present in the horizontal output system is the width control. Its function is to vary the width of the image on the picture-tube screen. It does this by controlling the amount of sweep current flowing through the horizontal deflection winding. Width controls are of two kinds – inductive and resistive. The first is much more popular. The inductive type of device is related in its operation to the horizontal output transformers, the transformer contains the winding across which the width coil is connected.

The width coil is a permeability-varied, adjustable inductance. A variety of physical shapes may be encountered, but the two shown in Fig. 2-9 are typical of them all.

The resistive type of width control shown in Fig. 2-9 (C) is a variable resistor, usually used to control the amount of sweep current flowing through the horizontal deflection winding by limiting the current output from the horizontal output tube. Based on the fact that this type has limited application, its operational capabilities are apparently considered to be less than that of the inductive variety.

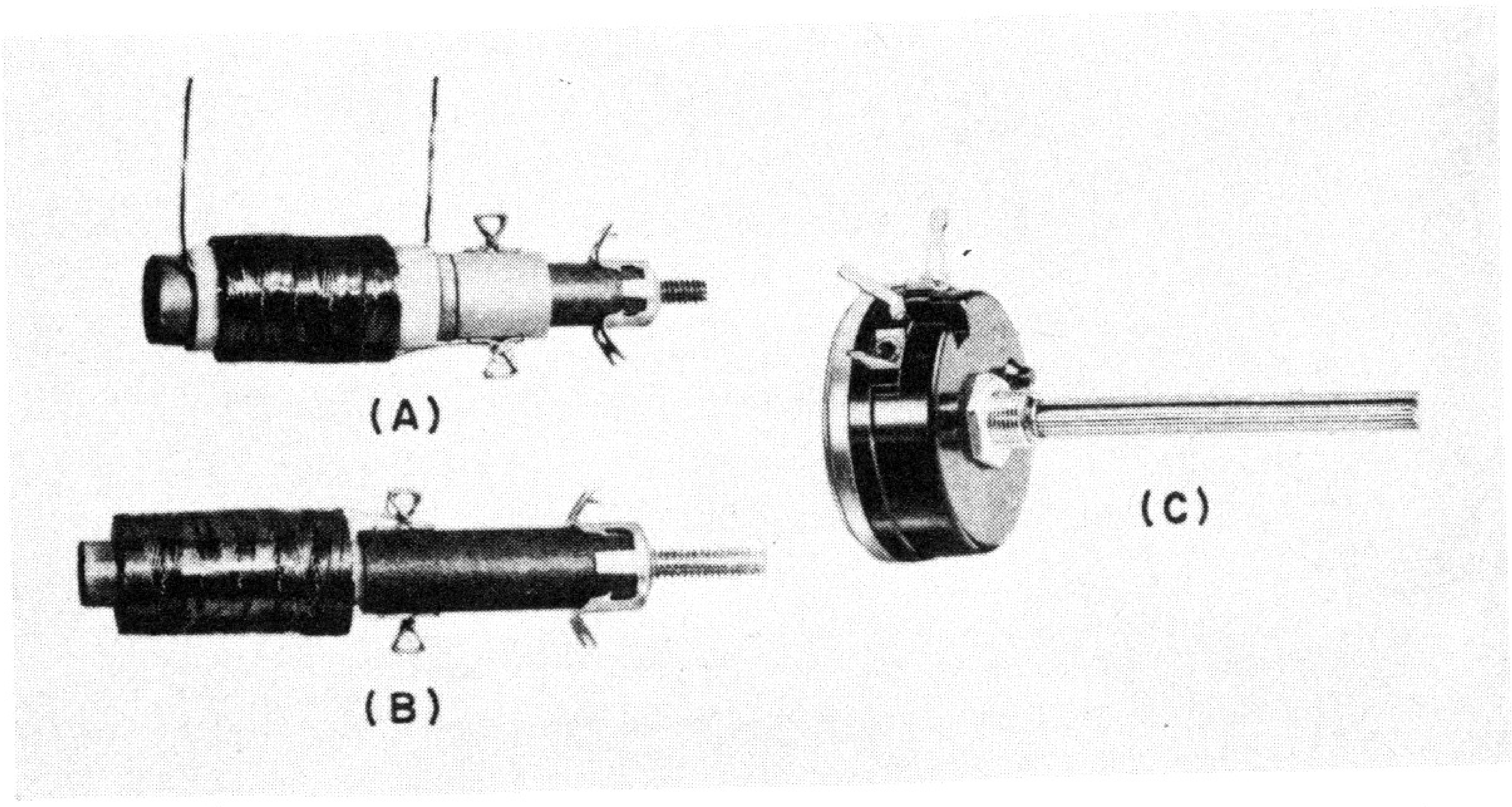

Fig. 2-9. Appearance of inductive-type width control and linearity controls (A and B), and resistive-type width control (C). *(A, B) Courtesy of RAM, (C) Courtesy of IRC.*

Damper Tube

Another of the sections of the over-all horizontal output system is the damper tube. This is a power-type vacuum-tube diode rectifier typified by the 5W4, 5J4, 6W4, 25W4 tubes. A brief review of its function must, of necessity, be limited in scope. Briefly, its function is to load the horizontal deflection winding during part of the cycle and thus damp (and so effectively remove) undesired oscillations which would otherwise be a part of the sawtooth-shaped current flowing in that winding. An incidental function of the damper tube is to aid in the recovery of electric energy, which would be otherwise wasted in the horizontal output system, and thus increase electrical efficiency. These statements are not offered as even a brief explanation of damper tube action (which is discussed in detail in Chapter 4), but they are expressions of its primary uses.

Linearity Control

The linearity control is another element in the over-all horizontal output system. It is a variable inductance (permeability-varied) which, in conjunction with one or two fixed capacitors, forms a resonant system. Its purpose is indicated by its name; that is, it provides a means for shaping the sweep current in the horizontal deflection winding of the yoke so that it is linear in its rise. In performing this function, the linearity control acts in conjunction with the damper tube.

In appearance, the linearity control resembles the width control shown in Fig. 2-9; one cannot be distinguished from the other by a simple, visual examination. The electrical characteristics of both width and linearity controls, as well as their operation, are given in a subsequent chapter.

Horizontal Deflection Winding

The horizontal deflection winding resembles the vertical deflection winding as shown in Fig. 2-3, although, in the assembled view given in Fig. 2-4, the former is closer to the neck of the picture tube than the latter. This is the case in all TV receiver deflection yokes because it is desired to arrange the closest coupling between the electron beam and the field issuing from the horizontal deflection windings. Thus, the beam is within the densest portions of the horizontal deflection field, and minimum distortion during deflection is achieved.

The horizontal deflection winding has several important constants, among which are the inductance, d-c resistance, and distributed capacitance. As in the case of the vertical winding, the two constants usually specified are the inductance and the d-c resistance. In this case, however, because of the higher frequency involved, the reactance of the coils is considerably higher than the resistance. This makes the circuit requirements very much more critical. Other electrical and physical requirements are discussed in Chapter 6.

The constants of the horizontal deflection winding are critical for another reason discussed in detail in Chapter 4. This is the creation of a resonant condition in the horizontal sweep output system, and in order that the horizontal deflection winding respond properly (or at least perform properly in this connection), its electrical requirements must be satisfied to a critical degree.

Physical Requirements of the Deflection Yoke

The deflection yoke must as a whole satisfy certain physical requirements in addition to the electrical requirements of its windings. It is intended to be slipped over the neck of the picture tube and to be placed as close as possible to the flare of the tube. Such being the case, its con-

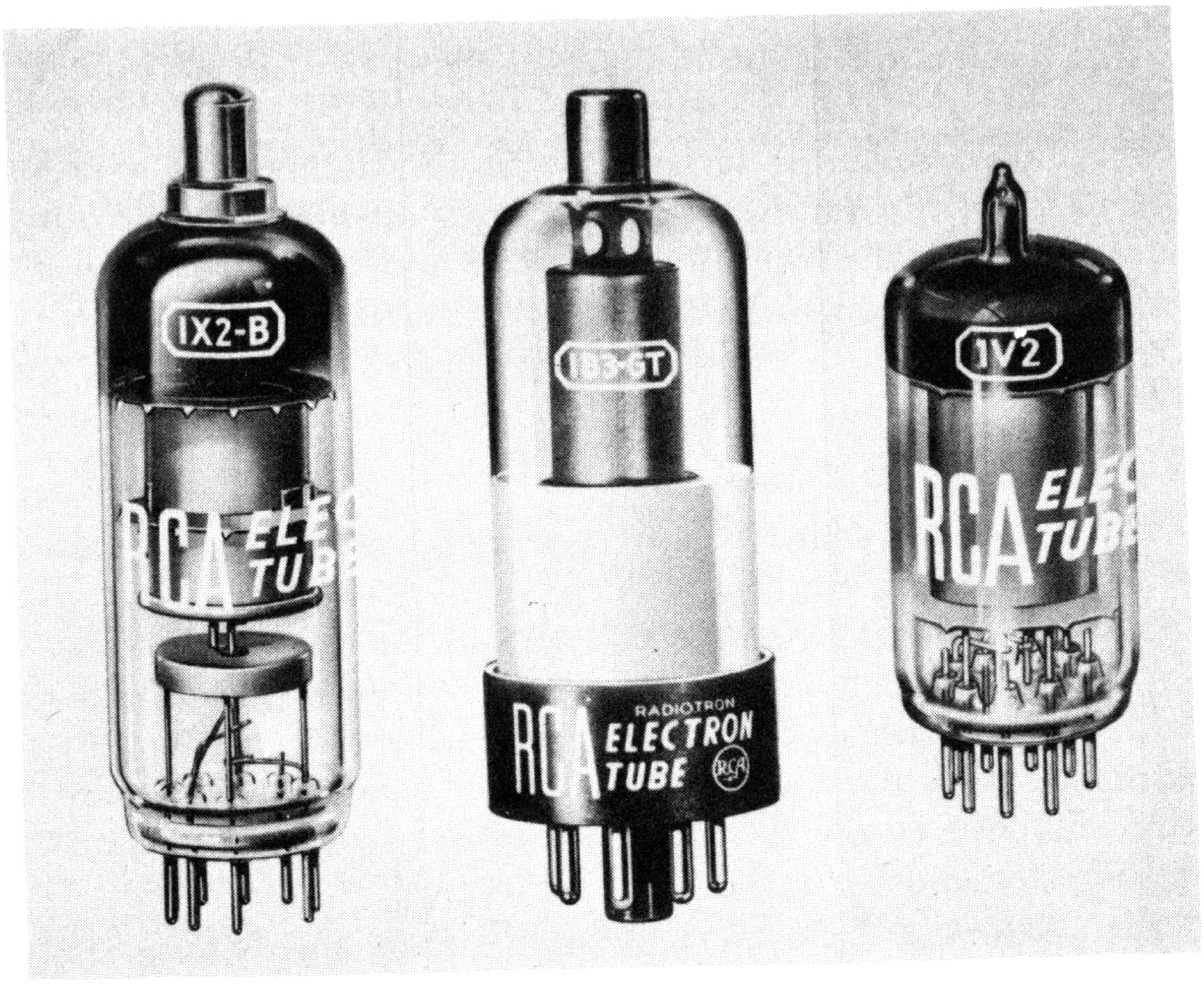

Fig. 2-10. Types of high voltage rectifiers for TV receivers.

Courtesy of RCA.

struction must satisfy the needs of the picture tubes with which it is to be used. In this connection, the screen dimensions of the picture tube also make demands on the suitability of a yoke. (See Chapter 6.)

High-Voltage Rectifier Unit

The high-voltage rectifier and filter unit is an integral part of the over-all horizontal output system. However, its separate function sometimes requires its consideration as an entity.

The rectifier is a power-type, high-voltage vacuum-tube diode such as the 1B3, 1V2, and 1X2 shown in Fig. 2-10. It is operated at plate voltages between 8 kv and about 18 to 20 kv. Associated with it is a very simple capacitance-resistance filter. With the rectifier output ripple frequency high and the current drain low, the filtering capacity of this simple network is amply effective, especially with the additional output capacitance provided by the inner and outer conductive coatings on the picture tube. Complete explanation of the high-voltage rectifier appears in Chapters 4 and 5.

Basic Horizontal Output System Circuit

The schematic diagram in Fig. 2-11 shows that the horizontal sweep output system contains many more components than the vertical output system. This is so in all variations of both systems. The schematic in Fig. 2-11 is organized in two parts, shown by the horizontal dividing line. Above the line is the high-voltage rectifier and filter, and below it is the sweep circuit. Although the functions of the two circuits differ widely, there is a definite association betwen the two. They are closely tied to each other in the physical organization in TV receivers, and electrically, the sweep system contributes to the functioning of the rectifier.

The high-voltage rectifier is related to the horizontal sweep system, even though it plays no part in the actual development of the horizontal sweep deflection current and its control. In fact, just the reverse is true; the sweep voltage circuit is the place of origin of the a-c voltage which eventually is applied to the plate of the high-voltage rectifier for conversion into the second anode d-c voltage required by the picture tube. Because of this, and because the horizontal output transformer supplies the high-voltage rectifier filament voltage (and also plays a part in the development of the high a-c voltage fed to the high-voltage rectifier plate), the two systems are shown together.

The horizontal output tube is the logical starting point for the examination of the system. It is a beam power pentode. The plate is

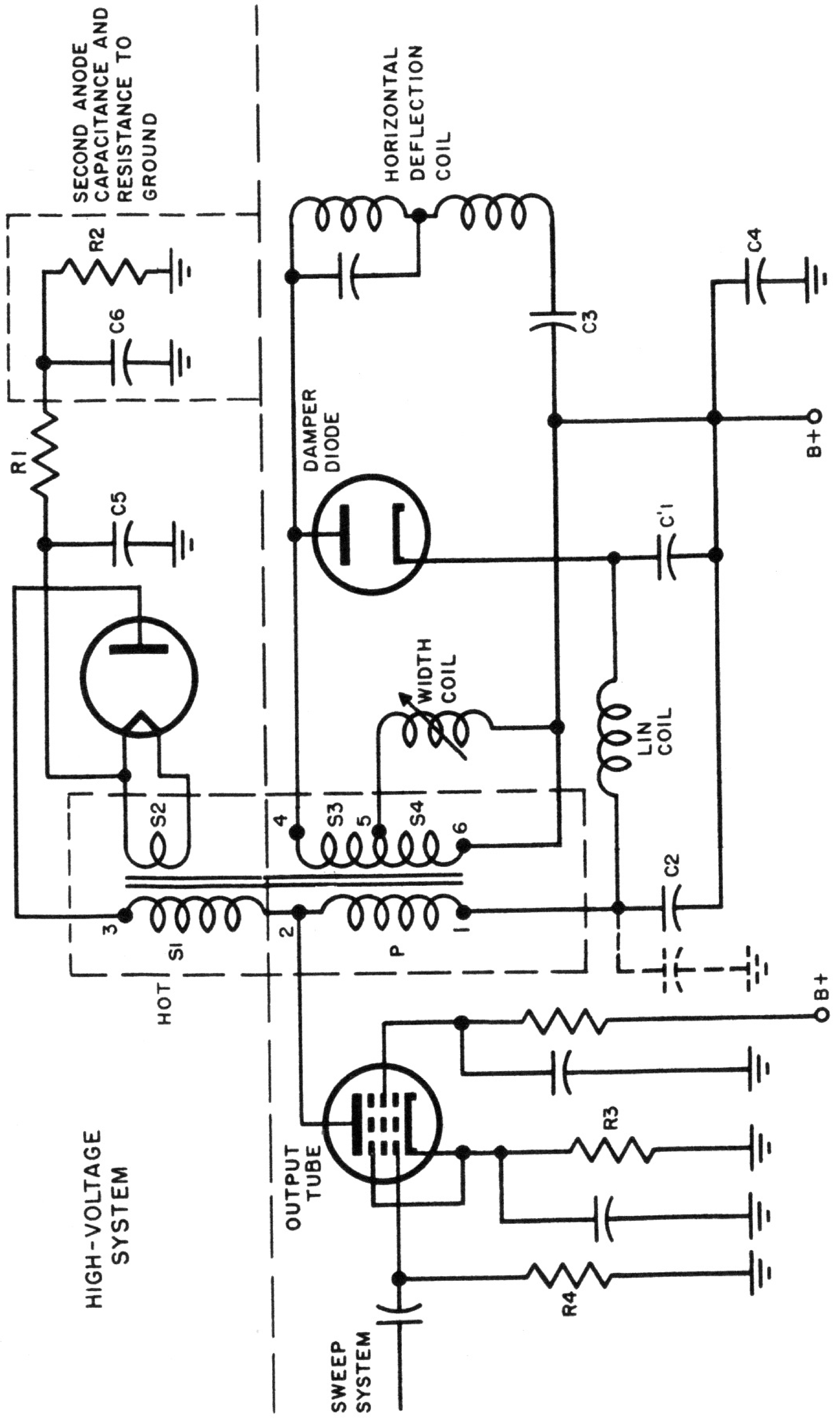

Fig. 2-11. Typical circuit of basic horizontal output system.

connected to the horizontal output transformer. The screen receives its voltage from the B+ supply via a voltage dropping resistor. Cathode bias resistor R3 protects the tube if grid drive is lost. There is a grid leak (R4) which, as explained in Chapter 1, supplies an additional bias when drive from the horizontal oscillator is present at the grid. It will be recalled that this tube was described as being operated Class B or C.

All components shown are important to the functioning of the system, yet it should be said that the horizontal output transformer is perhaps the most important of all. It is one of the components most frequently subject to failure and thus it is particularly important that it is understood by the serviceman.

In Fig. 2-11, the basic horizontal output transformer is enclosed by a dotted outline and labeled "HOT" (horizontal output transformer). It is seen to consist of a primary winding P and a number of secondary windings S1, S2, S3, and S4. The primary winding, P, carries the plate current for the horizontal output tube. For the moment we shall ignore the exact waveshape of this current and simply assume that a suitable changing signal current is present.

S3 and S4 are seen to be a single continuous winding with end terminals (4 and 6) and a tap (terminal 5). Moreover, these two secondaries are seen to be coils which are inductively coupled to the primary, P, and have no direct conductive connection with it.

Connected across terminals 4 and 6 is a series arrangement of the horizontal deflection windings and the capacitor C3. Thus, when an a-c signal voltage appears by transformer action between 4 and 6, it will be applied to the horizontal deflection coils and results in the flow of signal (sweep) current through the S3-S4 horizontal deflection coil circuit. Thus the horizontal deflection windings on the yoke are transformer-coupled into the plate circuit of the horizontal output tube. Note that there is no direct physical connection between the primary P (or the plate circuit of the output tube) and the yoke winding.

Because of the transformer action and fall of plate current in the primary P, corresponding changes will result in whatever voltage is induced across the secondaries S3-S4, and so will be applied to the yoke windings.

As stated earlier, among the numerous functions of the horizontal output transformer is the matching of the impedance of the horizontal deflection windings to the plate circuit of the horizontal output tube. An analogy is the output transformer which matches the low-impedance voice coil of a loudspeaker to the relativity high impedance of the plate circuit of the audio output tube. By suitable design of the horizontal output transformer, the plate circuit of the output tube sees a high impedance reflected from the yoke winding and the yoke winding sees low impedance reflected from the output tube.

Width Coil

Let us now look at the width coil connection in Fig. 2-11. It is shown joined to secondary winding S4. In this way, it is connected across a portion of the windings S3-S4, which feeds energy to the horizontal deflecting coil. When two inductors are connected in parallel, the resultant inductance is less than the lesser of the two individual values. Thus, the effective inductance present across terminals 5-6 of the transformer winding S4 is less than it would be without the width coil. The behavior is as if *the number of turns in the transformer secondary winding* were reduced, and thus the voltage there reduced. In turn this reduces the amount of sweep current flowing in the horizontal deflection coil.

By making the width-coil inductance variable in value, control of the sweep-voltage amplitude at terminals 4-6, and thus the current in the horizontal deflecting coils, is possible. The degree of this control is a function of the inductance range of the width coil relative to the inductance of the transformer winding across which it is connected.

Using the variables mentioned, it is easy to see that a secondary winding with a variety of taps, as shown in Fig. 2-12 (B), can satisfy the impedance requirements of a variety of horizontal deflecting windings, different in design; and for different width coils. This is explained more fully elsewhere in this book.

Further examination of Fig. 2-11 shows several more components which, by being tied to the horizontal output transformer primary and secondary circuits, seem to be a part of the horizontal sweep system. These are the damper diode and the linearity coil. Their functions are quite detailed, and only a very brief elaboration can be given here. It is of far more value at this moment to understand the general location of these components in the over-all organization of the output system. The complete explanations of how these parts function is given later in Chapter 4.

Concerning the damper diode and the linearity coil, they are closely allied with each other and with winding P of the horizontal output transformer, which carries the output tube plate current. When not conducting, the ordinary diode is a high-impedance device, but when conducting,

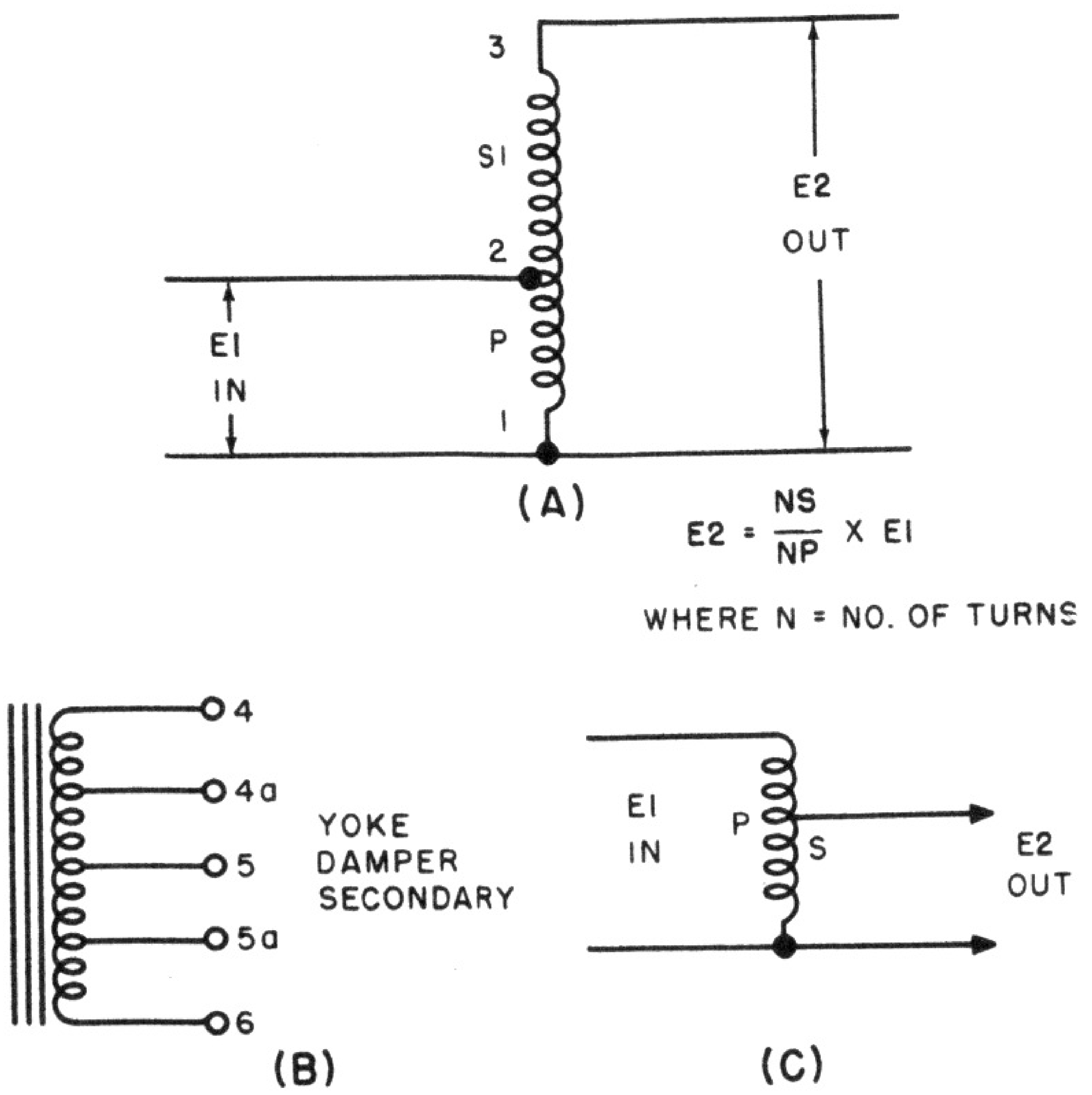

Fig. 2-12. Autotransformer and tapped winding arrangements in windings of the horizontal output transformer.

it becomes a low-impedance device, the exact value of which is a function of the amount of current flowing through the diode. Whether it becomes conducting or remains nonconducting is determined by the polarity of the voltages effective at the plate and cathode of the damper tube. When the plate is positive relative to the cathode, the tube conducts and has a low resistance. It thus becomes an automatic switch which, when the plate is positive, has a very high resistance, and thus no shunting effect on the circuit. But when the plate is negative, it shunts a low resistance across the circuit.

If the horizontal sweep section of Fig. 2-11 is examined, it will be seen that as far as a-c is concerned, the diode tube is, in effect, shunted across the horizontal deflection windings, and so also, across the secondaries S3-S4. The a-c path to the low end of the deflection coils when the tube is conducting is via C1.

The reason for switching the diode tube on and off is explained in part by the name assigned to it — the *damper* diode. When conducting, the low resistance it presents across the circuit damps oscillations which, for a reason to be explained later, appear periodically in the system. If not damped, these oscillations would interfere with the performance of the sweep circuit.

As far as circuit organization is concerned, the damper tube always is in shunt with the yoke, or across the whole (or part) of the secondary of the horizontal output transformer which feeds energy to the horizontal deflection winding.

As to the linearity coil, its location, in all systems that use it, is in the series chain. This includes the low end of the horizontal output tube plate winding on the horizontal output transformer, the damper tube, and the B+ supply, even in circuits which are not quite like the one shown in Fig. 2-11.

The linearity coil helps shape the sweep current flowing in the horizontal deflection coils so as to make the horizontal movement of the electron beam across the face of the screen a linear advance. To accomplish this, it must coordinate plate current flow in the horizontal output tube and the conducting action of the damper tube relative to time. The complete action of the damper tube and the linearity coil cannot be fully explained at this point in the text, because explanation of the time sequence of action which takes place in the horizontal sweep output circuit is required first. This explanation involves the output tube, the horizontal output transformer, and the horizontal deflection winding, as well as the damper diode and the linearity coils. The discussion is given in Chapter 4.

A final point concerning circuit organization of the components of the basic horizontal sweep output circuit is the application of the B+ voltage to the horizontal output tube. It would appear that the path of the B+ voltage to the plate of the output tube is via the S3-S4 secondaries and the damper diode. This is only a momentary path, when the receiver is first turned on. After that, the path involves the linearity coil and the capacitors C1 and C2. Of these capacitors, C1 serves a special function – that of B+ boost. This cannot be explained now since it would be out of place in the approach we are taking to creating understanding of the behavior of the system. Therefore, it must be taken for granted that the B+ supply voltage reaches the plate of the output tube and that the primary winding of the horizontal ouput transformer is its path. These actions are explained fully in Chapter 4.

About 1 amp of peak current may flow in the horizontal deflection coils, and high peak currents may flow also in associated components, so that their design involves the dissipation of electrical power. It is because of this that the impedance-matching problem is a serious one.

It is also important to realize that numerous variables apply to the different components used in the sweep system; these will be discussed later in this book. In order that subsequent comments concerning the variables have meaning, it is necessary to elaborate somewhat on the horizontal sweep circuit components referred to in Fig. 2-11. This is done in subsequent pages.

High-Voltage Rectifier System

The circuit organization of the high-voltage rectifier system is shown in Fig. 2-11. In essence, it is an ordinary half-wave rectifier which functions on a pulse-shaped a-c voltage rather than the sine waveform normally encountered in received and amplifier power supplies, or, for that matter, in the low-voltage power suuply of the TV receiver.

The windings P and S1 on the horizontal output transformer form the high-voltage secondary winding which supplies a series of high-voltage pulses (15,750 cps) to the high-voltage rectifier tube. These pulses are positive relative to ground. Rectification takes place in normal fashion. The capacitor C5 is the input filter capacitor for the R-C filter C5-R1. The output filter capacitor is C6, this being the capacitance to ground of the second anode coating on the picture tube; and the load resistance R2 is the resistance of this anode to ground.

The point of origin of the high a-c voltage fed to the rectifier is, strangely enough, the horizontal deflection winding. Just how this pulse voltage is generated is explained fully in Chapter 4. For the present, let it suffice to say that a high-voltage pulse (15,750 cps) appears across the primary P of the horizontal output transformer, where, by virtue of the autotransformer action between the primary P and the secondary P plus S1, a high-voltage pulse of from 8 kv to perhaps 20 kv is available for the high-voltage rectifier plate.

The high-voltage rectifier tube requires a voltage for its filament. This, too, is obtained from the horizontal output transformer by means of still another secondary winding, S2. This is a single-turn loop around the core of the transformer. It can be seen in Fig. 2-8 as the heavy loop that terminates in two free leads. The voltage which this secondary feeds to the rectifier filament also is of pulse shape at 15,570 cps. It is of suitable low voltage as required by the filament.

More About the Horizontal Output Transformer

If a transformer secondary has fewer turns than the primary, a voltage step-down occurs; if the secondary has more turns than the primary a voltage step-up takes place. In this kind of transformer, the voltage ratio is the same as the turns ratio.

This is true whether the secondaries are completely separate from the primary, as in the case of P and secondaries S1, S3 and S4, or whether the secondary and the primary act as an autotransformer, as is the case with the primary P and the secondary P plus S1 in Fig. 2-11.

The arrangement to obtain the high voltage for the rectifier (as shown in Fig. 2-11) is commonplace in TV receivers. The winding 1 to 2 is the primary and is part of the complete winding 1 to 3. By making the number of turns in the total winding 1 to 3 sufficiently larger than 1 to 2, a substantial voltage step-up is obtained.

The ground termination for the a-c voltage source applied to the rectifier plate is the capacitance to ground of the low end of the primary winding P or the capacitor connected there. This is indicated in Fig. 2-11 by the dotted line capacitor connected between the low end of P and the ground. The d-c return is through the linearity coil, damper diode, S3-S4, and the plate power supply. The usual voltage step-up obtained in this way is from about 2½ to perhaps 3 times the voltage present across the primary winding P.

The autotransformer arrangement is symbolized in Fig. 2-12 (A), which is the circuit for an autotransformer intended to furnish a stepped-up output voltage. A step-down autotransformer is shown in Fig. 2-12 (C).

Little need be said concerning the secondary S2, except perhaps that in some instances two, or even three, such single-turn windings are used to supply filament voltage to two or three high-voltage rectifiers.

S3 and S4 are shown in Fig. 2-11 as joined at tap 5. This is simply a matter of individual transformer design; the two secondaries can be separate. Also, the winding 4 to 6 may have a number of taps, as shown in Fig. 2-12 (B). Between each of these, there appears a voltage that bears the same relationship to the primary voltage value as does the turns-ratio of the number of turns between the taps concerned and the number of turns in the primary winding. By having taps on the secondary winding that serve to feed the sweep voltage to the deflection coils, it is possible, by selecting the proper taps, to satisfy the voltage requirements of a variety of deflection coils.

Voltage Transformation in Horizontal Output Transformer

The transformation of voltage in the basic horizontal output transformer is both step-up and step-down, depending on the circuit involved. In the case of the high-voltage rectifier, voltage step-up is used; but in the case of all other circuits – that is, windings – the voltage is stepped down. Such are the high voltage-rectifier filament, the horizontal deflection-coil sweep-voltage supply winding, the winding across which the width coil is connected, and any other which may be a part of the transformer.

Another important point concerning voltage transformation in a transformer is that it is not a one-way street. While it is true that, in the case of the conventional transformer, the usual method of use is such that all voltages are considered relative to the primary – that is, the primary winding is subject to the input voltage and the secondaries are the sources of the output voltages – there is no rigid rule that prevents using the transformer in the reverse fashion. Of course, the electrical limitations set for the transformer must be recognized; but this does not alter the fact that a voltage fed into a secondary winding will appear across the primary winding as either a stepped-up voltage or a stepped-down voltage, depending entirely on the turns-ratio between the winding into which the voltage is fed and the primary winding.

If the original turns-ratio is such that the secondary voltage is less than the primary voltage, then (under the conditions mentioned above) the reverse voltage relationship will be true. This is an important point to bear in mind when considering the operation of horizontal sweep output systems, because such reverse transformation of voltage does take place (and in addition to), and at the same time as the normal transformation from primary to secondaries.

D-C Resistance Windings

The coils used in transformers are wound with wire, and wire displays the property of resistance. In considering the coils of any transformer this resistance must be taken into account.

If, for the moment, we assume that all the coils are wound with the same wire, that winding which has the greatest number of turns will display the greatest amount of d-c resistance. So it is possible to say that the coil with the greatest amount of inductance will also show the greatest amount of resistance. Accordingly, S1 in Fig. 2-12 will display greater d-c resistance than the primary P, and primary P will show greater resistance than the secondary S3, which has lower inductance (fewer turns); and the secondary S3 will possess greater d-c resistance than the single-turn filament voltage source.

If any one horizontal output transformer is selected for discussion, it is possible to correlate the d-c resistance of winding with the voltage output relative to the d-c resistance and voltage rating of the primary. The higher the d-c resistance of a winding relative to the primary winding resistance, the higher the output voltage. (This neglects, of course, the consideration of voltage step-up as a function of resonance.)

However, it is necessary to bear in mind the possibility that all coils may not be wound with the same size wire or with the same kind of wire material. For example, it is possible to make a coil with more turns than another, yet with lower d-c resistance, simply by using wire of larger diameter. This statement is made simply to prevent the formation of a fixed opinion regarding the relationship between relative voltage and relative d-c resistance ratings of a transformer winding – that is, that the coil which supplies the higher relative output voltage because it has greater relative number of turns will, under all circumstances, have the higher d-c resistance.

The reason for raising this point is explained fully in Chapter 7, where we deal with the electrical ratings of horizontal output transformers.

Impedance Considerations in the Horizontal Output Transformer

We mentioned that the horizontal output transformer was used as an impedance-matching device between the low-impedance horizontal deflection winding and the comparatively high-impedance output tube plate circuit. The taps which are sometimes provided on the secondary winding connect to the deflection yoke (or to the damper tube or the width coil) and are intended to afford different impedance outputs so as to enable the best impedance match and most effective transfer of energy between the transformer and whatever device is connected across the secondary winding, especially the horizontal deflection coils. Taps also are sometimes provided for the damper tube connections and for the width coil connections to the horizontal output transformer secondary. As a rule, these are found more frequently in replacement transformers than in the transformers used as original components.

Basic Vertical Output System Circuit

The circuit equivalent of Fig. 2-1 appears in Fig. 2-5. If, for the moment, we stretch the imagination and visualize the vertical deflection winding as being the voice coil of a loudspeaker, the circuit organization of the vertical sweep output system is substantially the same as any ordinary single-tube audio output system. The amplitudes and components and the waveshapes of the sweep voltages differ greatly from the kinds of voltages one experiences in an audio system. But the circuitry between the vertical output tube and the vertical output transformer, as well as between the transformer and the vertical deflection coils, does not differ too much from the conventional audio system. Of course, we must bear in mind that this is a basic system. Variations of it will be seen to contain numerous differences, but even so, they are not too elaborate.

It will be recalled that the vertical output tube was described as being substantially a Class A amplifier. The plate circuit of this tube contains the primary of the vertical output transformer and carries the plate current for the output tube. The secondary (S) of the vertical output transformer is a separate winding which is coupled to the primary, and the transformed sweep voltage appears across its terminals. This voltage is applied to the deflection coils which are connected across the transformer secondary, and the vertical sweep current flows through the secondary system.

The vertical sweep output system is a power transferring circuit. While it is true that only about 300 to 500 ma of sweep current is present in the vertical deflection coils, nevertheless the vertical output transformer must, to be an effective system, properly match the vertical deflection windings to the plate circuit of the vertical output tubes. If this is not done, an appreciable loss in power transfer takes place, and in addition, the waveform of the sweep voltage being transferred from the output tube to the deflection yoke becomes badly distorted from its required sawtooth shape. Both these phenomena can destroy completely the appearance of a picture on the picture-tube screen. Examples of vertical sweep voltage and current waveforms representative of improper operating conditions in the output system appear in Chapter 7. The full discussion of the requirements of the vertical output system appears in Chapter 3.

CHAPTER 3

CIRCUIT FUNCTIONING OF THE VERTICAL SWEEP OUTPUT SYSTEM

The function of the vertical sweep output system has been described as being the transfer of the vertical sweep voltage secured from the vertical oscillator to the vertical deflection coils. Part of this action is the transformation of impedance, whereby the low-impedance vertical deflection coils see the vertical output tube as a low impedance, and conversely, the vertical output tube sees the deflection coils as a high impedance. The vertical sweep output transformer performs the impedance transformation in the two directions. There also are other functions depending on the specific design of the circuitry. From these conditions stem the varieties of vertical output systems.

Types of Vertical Ouput Systems

Vertical sweep output systems can be grouped into two categories. In one group fall those circuits in which the output tube functions independently of the source of the vertical sweep voltage and performs the function of amplifying the vertical sweep voltage signal, and while doing so, also shaping it somewhat. This is the arrangement most frequently used. The second category includes those systems in which the vertical output tube is a part of the vertical sweep oscillator system. In this latter group the output tube also is known as the *discharge* tube.

In so far as the explanation of circuitry is concerned we shall deal mainly, in this chapter, with the first arrangement, and will consider it to be the basic system. The second category will be covered at the end of the chapter under the heading, "Variations in Vertical Sweep Output Systems."

Basic Vertical Output System

Two examples of the basic vertical output system are shown in Fig. 3-1 (A) and (B). The two are alike in all respects other than the output

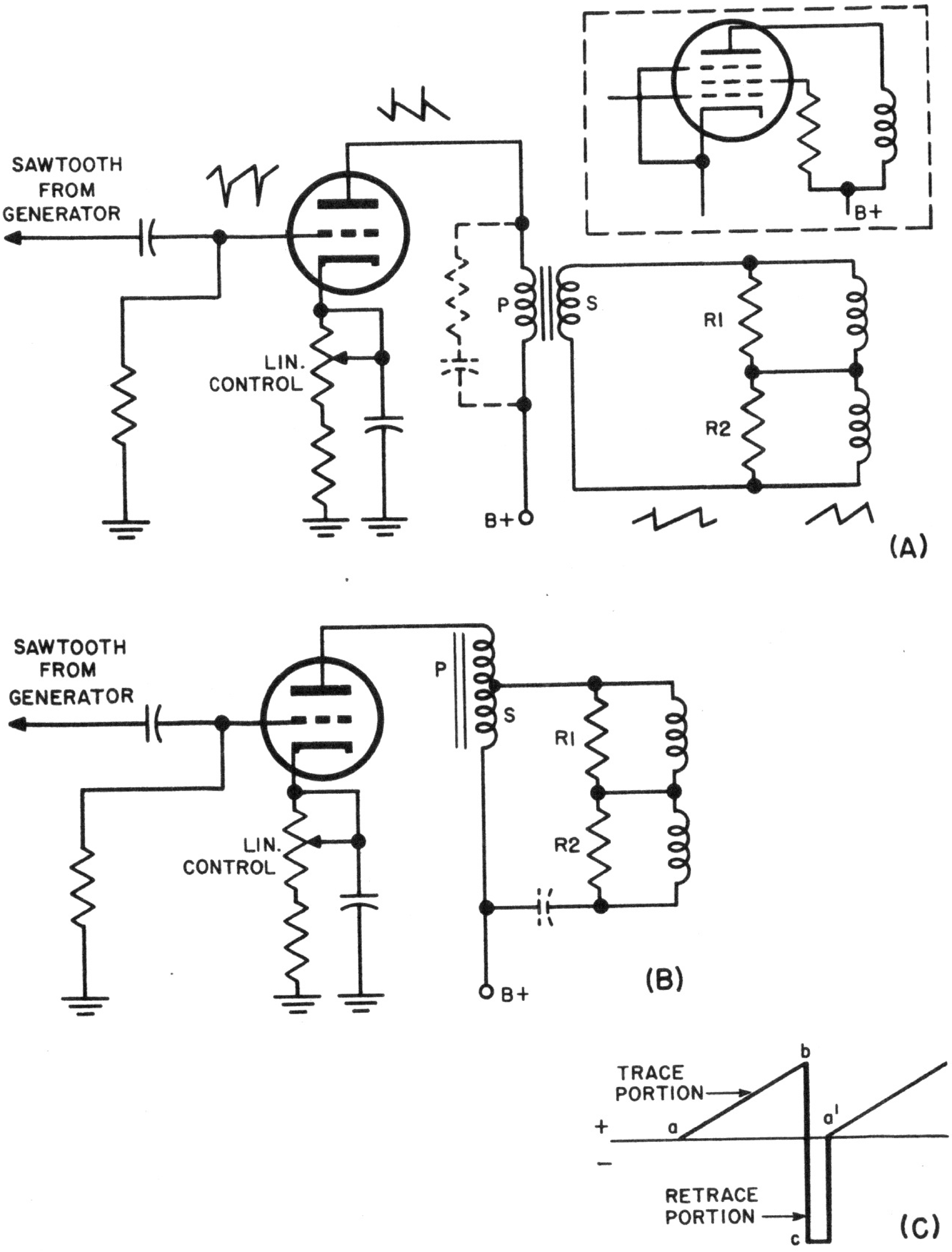

Fig. 3-1. (A) Typical vertical output circuit using regular transformer coupling. (B) Typical vertical output circuit using autotransformer.

transformer. The one shown in (A) exemplifies the conventional transformer coupling, whereas, the one illustrated in (B) employs an autotransformer.

The triode output tube circuit has been simplified to the extent that the number of elements in the control grid, cathode, and plate circuits is kept to a minimum. This does not limit the explanation. The tube symbols within the dotted enclosure show how a pentode tube used as the output tube is generally connected. Frequently the pentode vertical output tubes are triode-connected.

The dotted line capacitor-resistor combination shown across the primary of the output transformer in Fig. 3-1 (A) is sometimes used, and its function will be described later. The dotted line capacitor shown connected between the low side of the autotransformer and the deflection winding in Fig. 3-1 (B) is sometimes used to isolate the yoke coil from the d-c flowing through the autotransformer.

In essence the vertical output tube is a power amplifier. Most of the time its mode approaches that of a Class A amplifier with inductive load, although in some cases, the output tube is cut off during a portion of the input signal cycle.

Now consider (A) and (B) in Fig. 3-1 as the reference schematics and (C) as the reference waveform of the sweep voltage signal fed into the output tube control grid circuit. The sweep signal here is essentially a trapezoid. It is a sawtooth voltage to which has been added a rectangular pulse that forms a negative spike on the signal waveform. Assuming point *a* to correspond to the operating point in the output tube, the input signal voltage rises in the positive direction until it reaches the positive peak *b*. From *a* to *b* is the *trace* portion of the sweep voltage, and the plate current of the output tube rises during this interval.

Then the negative excursion of the signal voltage begins and reaches the peak value *c*, from which point it again rises in the positive direction until it reaches the point *a'* corresponding to the start of the trace portion of the voltage. The change *b-c-a'* of the sweep voltage corresponds to the *retrace* part of the sweep cycle. The change in input sweep voltage from *b* to *c* rapidly drives the output tube plate current to almost zero (in some instances, even beyond cut-off).

The changing plate current in the primary of the output transformer results in the development of a signal voltage across that winding, as shown by the waveform adjacent to that winding in Fig. 3-1 (A). This is transferred to the secondary of the transformer by normal transformer action and appears across the vertical deflection winding.

The action described in connection with (A) is duplicated in (B), even though the type of transformer used as the output coupling device is different. The deflection winding is a low-impedance device; hence the voltage transformation in the output transformer is step-down, thus satisfying the high current and low voltage requirements of the deflection coil.

Vertical Deflection Winding

The sweep current in the vertical deflection coil is supposed to have sawtooth shape with linear forward trace and linear retrace. This was illustrated in Fig. 1-5. Because the vertical retrace lines are not desired on the screen during picture display, the retrace time interval is kept within the vertical blanking interval (also illustrated in Fig. 1-5). All this is, presumably, taken care of by the design of the vertical oscillator system, by the kind and duration of the retrace portion of sweep voltage waveform which it delivers to the vertical output tube, and by the blanking signals which are delivered to the picture tube.

The vertical deflection winding is essentially resistive in its behavior because the reactance of the winding is very low relative to its d-c resistance at the frequency of the vertical sweep signal (60 cps). But if we examine the time dimensions of the vertical sweep current more closely, we note that the forward trace period is about 15,550 μsecs – a comparatively long time – while the interval allowed for the retrace is very much less. It is about 1166 μsecs, sometimes less. This rapid change is the equivalent of a much *higher* frequency than for the trace period, and the inductance of the yoke winding then becomes an important factor.

During the forward trace period (15,500 μsec), the voltage across the deflection coil is essentially that across the resistive component and is like the voltage applied. (A sawtooth-shaped current is required; therefore, the voltage applied is a sawtooth.) Since the equivalent frequency is very much higher during the retrace period, the effective reactance can equal the d-c resistance or be even higher, but the coil no longer can be considered as being essentially resistive. The vertical deflection coil is essentially resistive during the forward trace; then it becomes inductive as well as resistive during retrace.

The retrace current and the forward trace current of the vertical sweep together must have a sawtooth waveform. But in order to make the current in a coil change at a constant rate, the shape of the voltage that must be applied to the deflection coil during the retrace period no longer is a sawtooth – now it must be rectangular for the inductive component and sawtooth for the resistive component. So it requires a form of trapezoidal voltage waveform, as described in Chapter 1 and illustrated in Fig. 1-8.

Sweep Voltage Input to Vertical Output Tube

The sweep voltage fed *into* the vertical output tube is a combination of a sawtooth and a rectangular waveform; several practical examples of this are shown in Fig. 3-2. These are as they appear on a test scope applied to the receiver. The over-all voltage amplitude is indicated by *A;* the sawtooth portion, which eventually appears across the vertical deflection coil and accounts for the forward trace, is labeled *B;* and the

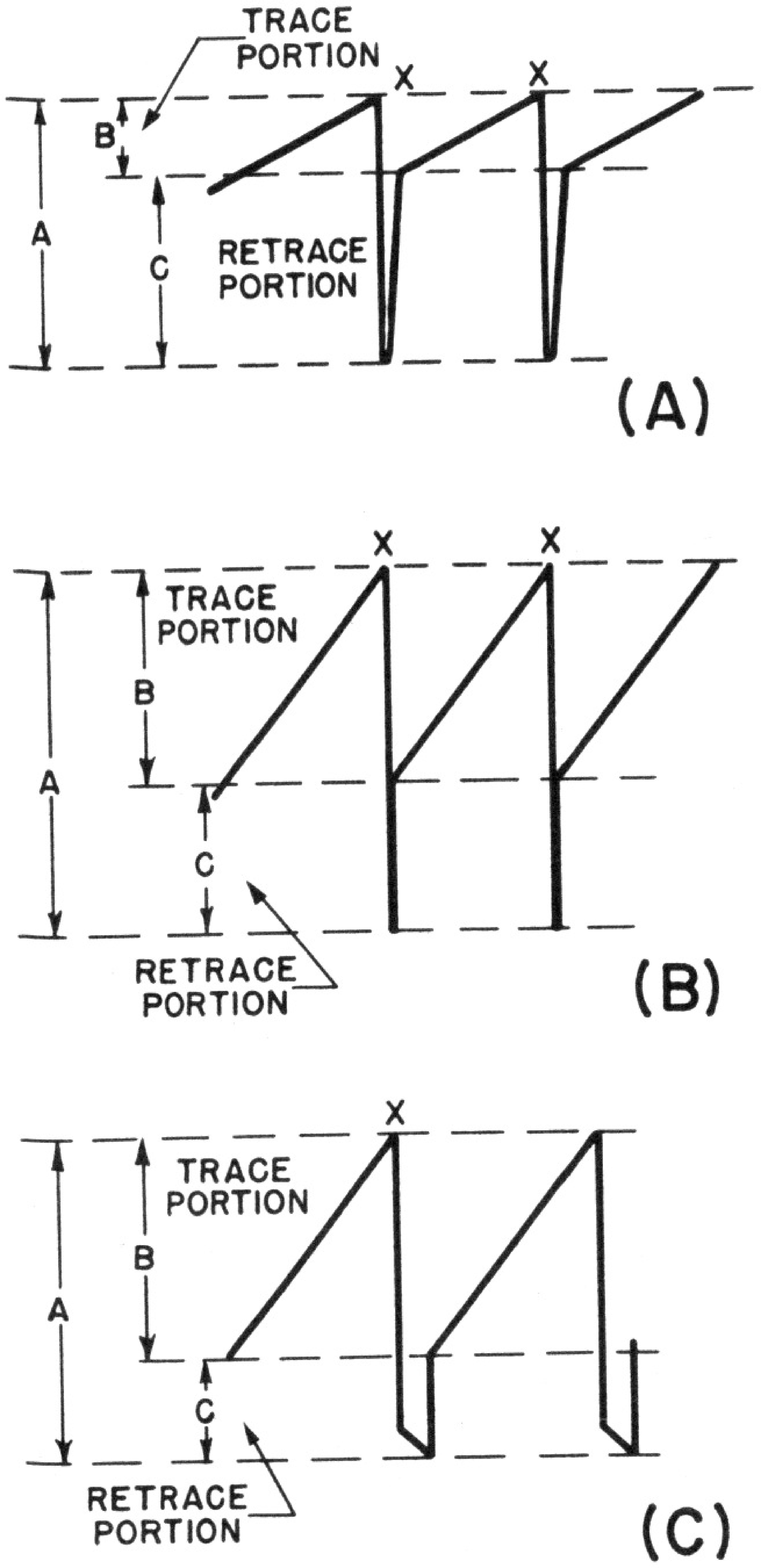

Fig. 3-2. Several examples of practical input voltage waveforms at the grid of the vertical output tube.

portion which accounts for vertical retrace is *C*, although the beginning of the retrace really starts at the peak positive point of the forward trace portion, here labeled *X*.

A variety of these waveforms will be encountered in practice, although they will all retain the general characteristics seen here – namely, the positive sawtooth portion and the negative pulse, or spike, portion. Sometimes the spike is visible only as a thin line, but if the horizontal dimension of the test scope trace is spread substantially, the negative spike is seen to have width, and looks like *C* in (3) of Fig. 3-2.

The Negative Spike

The relation between amplitudes of the sawtooth and the spike portion varies in different receivers. The peak-to-peak voltage ratings of the signal as a whole are always given, but voltage values of the individual parts of the waveform are not.

The over-all peak-to-peak value of the signal into the output tube varies in different receivers from about 35 volts to perhaps 200 volts. The electrical conditions in the vertical oscillator, including the charging voltage source (the B+ supply), and the value of the peaking resistor determine the relative amplitudes of the portions of the sweep voltage supplied to the vertical output. Thus there are numerous possible reasons why the trace and the retrace portions of this voltage might differ from what they should be.

Importance of Spike Portion of Sweep Voltage

It has been pointed out that the load on the vertical output tube is essentially resistive, but that the inductance of the deflection coil (reflected through the output transformer) becomes important during the rapid change of current of the retrace period. The effect of this inductance is to provide an inertia effect, which tends to keep the current in the deflection coil flowing at its maximum value, instead of allowing it to drop rapidly to effect retrace. This is illustrated by the dotted line in Fig. 3-3 (A).

This "overhang" of current is allowed to exist to an undesirable degree if the tube is substantially conductive during the retrace period. The plate circuit of the tube (plate resistance) forms the return circuit for the stored energy of the inductance in the circuit. If the plate resistance is relatively low, the undesirable effect is greater.

To overcome this, a sharp negative pulse, sometimes called a *spike,* is added to the waveform of the grid input voltage to the output amplifier. As illustrated in (B) of Fig. 3-3, this is done by the addition of a low-value resistor in series with the ground side of the oscillator discharge capacitor. In effect, this spike drives the output tube to, or near, cut-off during the retrace period. This is the same as saying that the plate resistance minimizes the effect of load inductance in slowing down the retrace period. At the same time, it limits the peak voltage across the deflection coil and the primary of the output transformer, thus minimizing arc-over and similar troubles.

Typical input and output voltage waveforms for a vertical output stage are shown in Fig. 3-3 (C) and (D), respectively. Addition of the negative spike (*b-c-a′*) to the input voltage waveform helps effect retrace rapidly enough to be ready for the new trace period at *a′*.

The above explanation is, in a sense, just another way of explaining what was covered in Chapter 2 about the need for a rectangular pulse voltage to effect a linear change in current in an inductance. In this case, however, the vertical output circuit is considered inductive only during retrace.

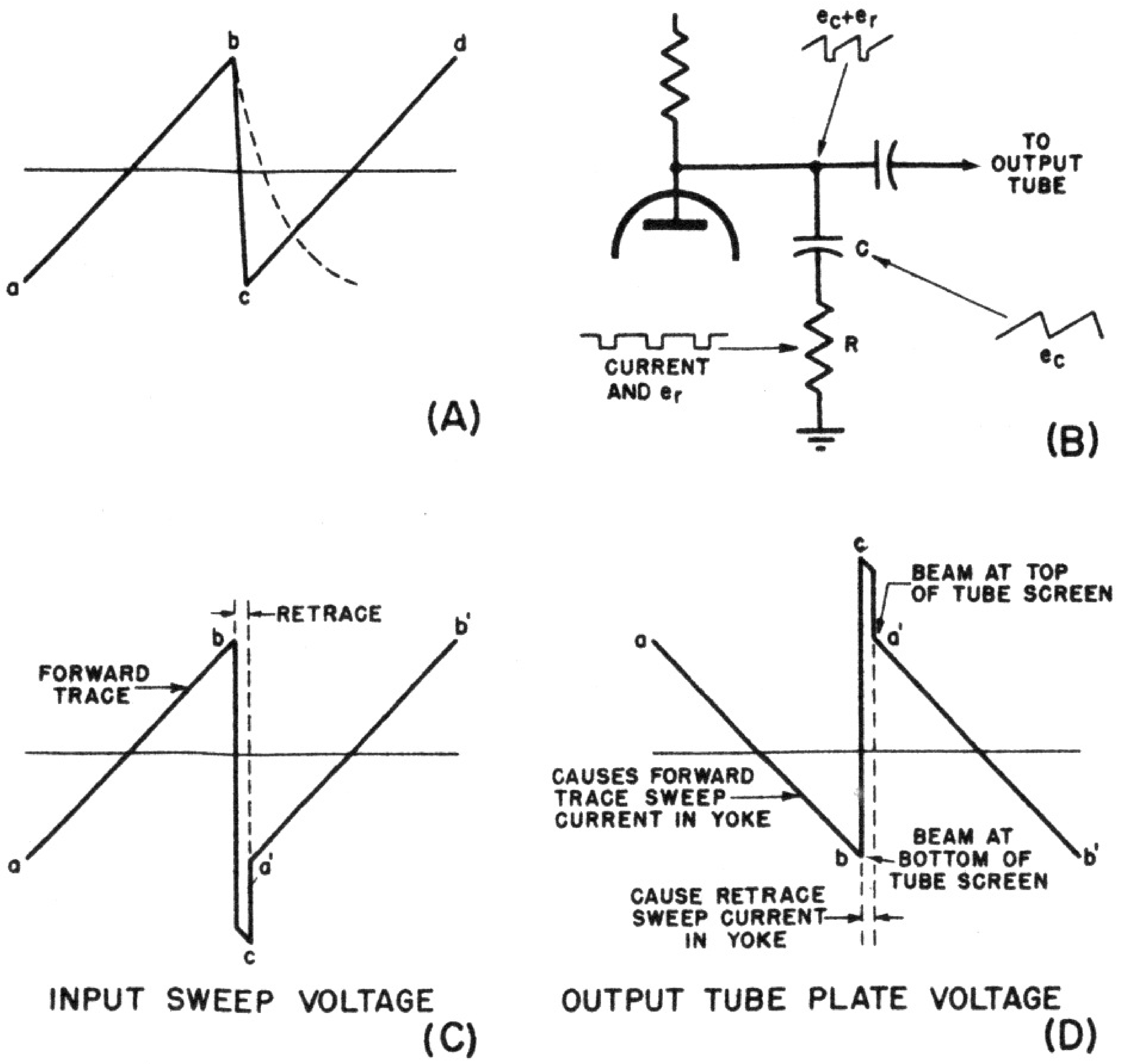

INPUT SWEEP VOLTAGE
(C)

OUTPUT TUBE PLATE VOLTAGE
(D)

Fig. 3-3. (A) Desired sawtooth current in deflection coil. (B) Addition of peaking resistor R to emphasize "spike" portion of waveform. (C) and (D) typical input and output waveforms for the vertical output tube.

The shape of the input voltage is also somewhat modified in many cases to take care of the fact that the plate resistance, which is a part of the output circuit, changes during the input cycle.

The Sawtooth Portion of the Input Sweep Voltage

The operation of the output tube during the trace portion of the input sweep voltage is conventional. The tube can then be considered as a Class A amplifier. The waveforms shown in Figs. 3-2 and 3-3 contain linearly varying trace sections; hence, with all other operating conditions in the remainder of the output system being correct, the vertical sweep of the beam will be linear.

There are instances, however, when the trace part of the input sweep voltage is purposely planned to be not linear. Means are then provided in the output circuit for correction of the nonlinearity in the input sweep voltage. Allowing some nonlinearity in the input signal makes the design of the sweep oscillator system easier.

Examples of such nonlinearity are shown in Fig. 3-4. The curvature in (A) of Fig. 3-4 would affect the picture towards the top of the screen, and the flattening near the positive peak would affect the bottom of the picture. The example selected for illustration is an aggravated case, and less serious curvature, such as that shown in (B), can readily be visualized.

Several different methods of linearity correction have been used in output tube circuits. One of these is the variable cathode bias in the form of the usual vertical *linearity* control. This adjustment enables changes in the grid voltage-plate current transfer characteristic so that its curvature is opposite to that of the input signal distortion; the end result is compensation by one for the other and a linear trace plate current. However, adjustment of the linearity control can also have other effects, and these are discussed in connection with the output tube output voltage.

Linearity of the trace portion of the input sweep signal is the same as deflection linearity. In this connection, several interesting details warrant mention. The load on the output tube is slightly inductive, even during the comparatively slowly rising trace portion of the input sweep signal. As a result, the plate current changes are not exact replicas of the grid voltage changes, especially since the rate of change of plate current is changing and thereby affecting the effective reactance offered by the transformer primary.

Some correction for the distortion caused by the inductive effects of the output transformer is inherent in the output tube. Some nonlinearity is deliberately introduced into this tube during design to

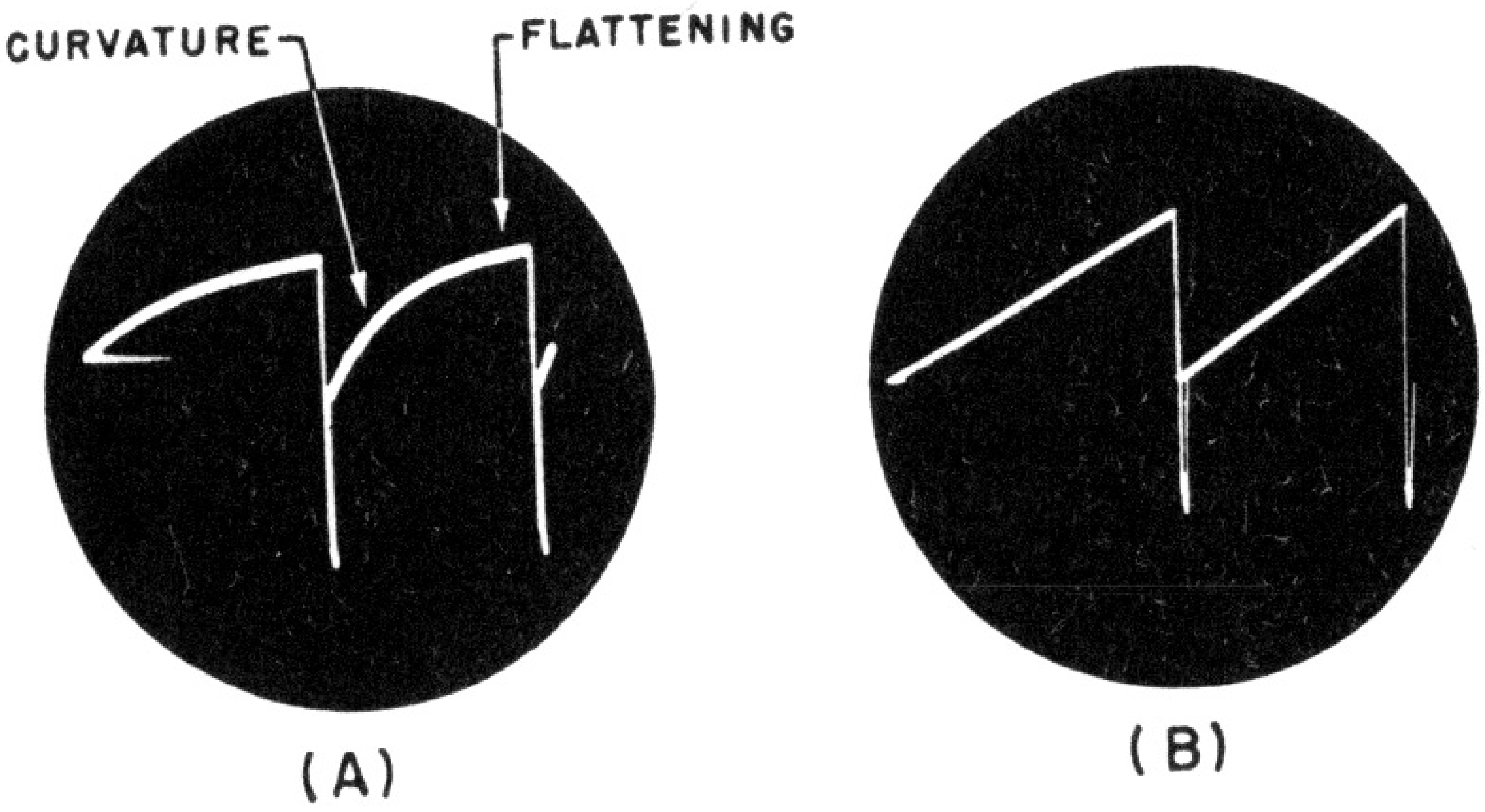

Fig. 3-4. Examples of nonlinearity in input sweep voltage waveforms.

compensate for the action due to the transformer, and so produce a linearly rising trace voltage across the transformer primary. There is therefore relatively little latitude in the interchangeability of output transformers for use with a vertical output tube. While some range of tolerance in the constants of the suitable transformer does exist, it is not too liberal.

Sweep Voltages in the Output Circuit

Up to the limit of the substantially linear portion of the E_g-I_p characteristic of the tube, the output voltage is proportional to the input voltage. When the gird drive voltage exceeds such limits, the output waveform becomes different from the input waveform, and the tube is said to be *overdriven.*

Overdriving the output tube flattens the sweep waveform near the positive peak of the trace portion. This is illustrated in Fig. 3-5. Flattening of the sweep current positive peak (bottom of tube screen) is shown in (B) of Fig. 3-5.

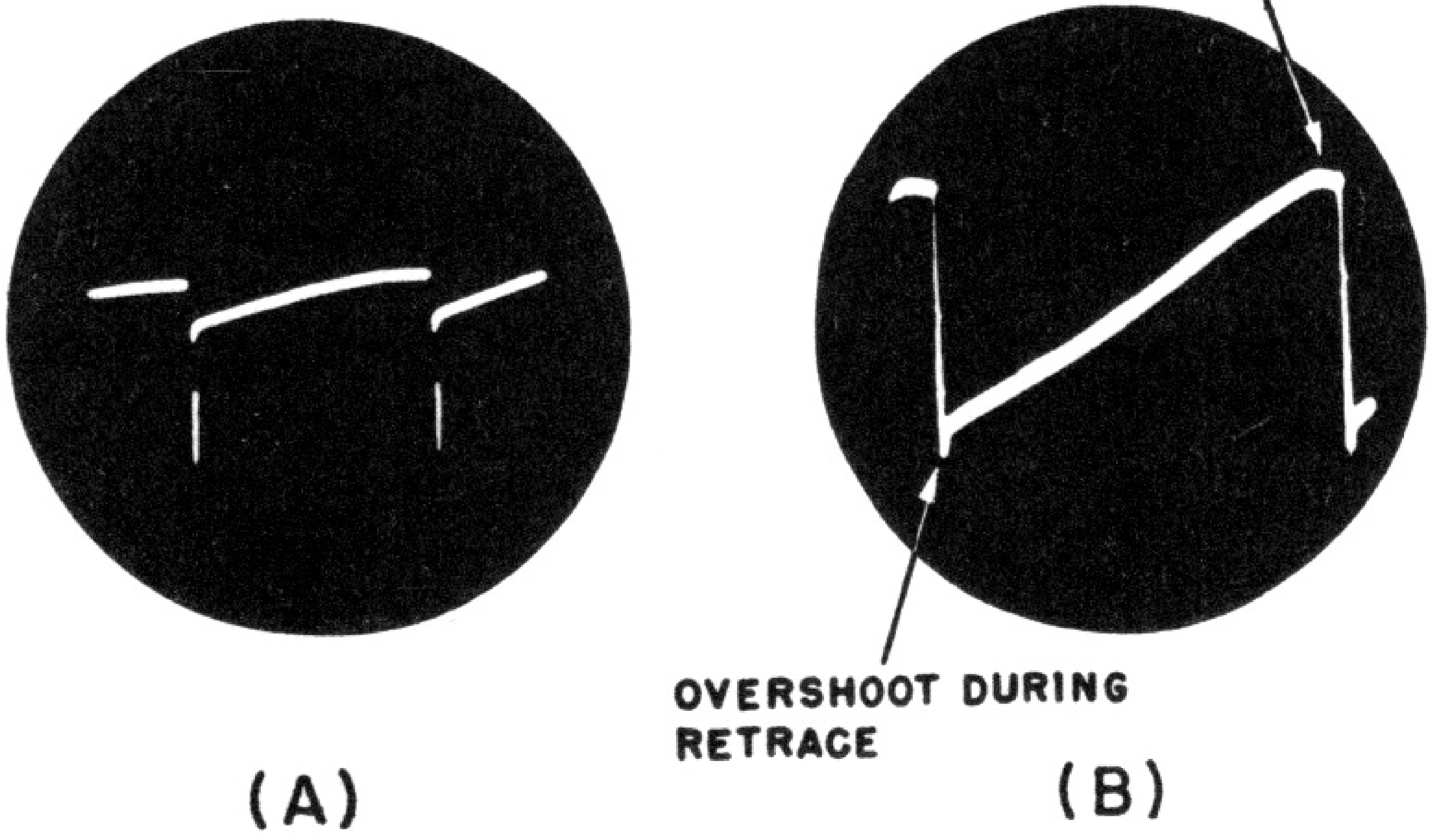

Fig. 3-5. Effect on output voltage waveform of overdriving the output tube.

Driving the output tube into plate current cut-off by an excessively strong negative spike during retrace will not be readily evident in the waveform of the input sweep signal. Neither will it be too readily evident in the waveform of the signal voltage in the plate circuit, except perhaps by signs of ringing. In fact, it is not unusual to drive a pentode output tube to plate current cut-off. When this is done, it is customary to load the plate circuit to avoid ringing, by connecting a series combination of a resistor and capacitor across the primary of the transformer as shown by the dotted lines in (A).

The damping circuit is arranged to have the minimum effect during trace and retrace periods. The capacitor tends to minimize the loading effect of the fixed-value shunt resistor during the trace period, whereas the capacitor is chosen to have least effect on the retrace time.

The negative spike appears in the plate circuits as a positive-going pulse which results from the sudden cut-off of plate current in the primary of the output transformer. So, in effect, it can be said that the transformer supplies the retrace voltage.

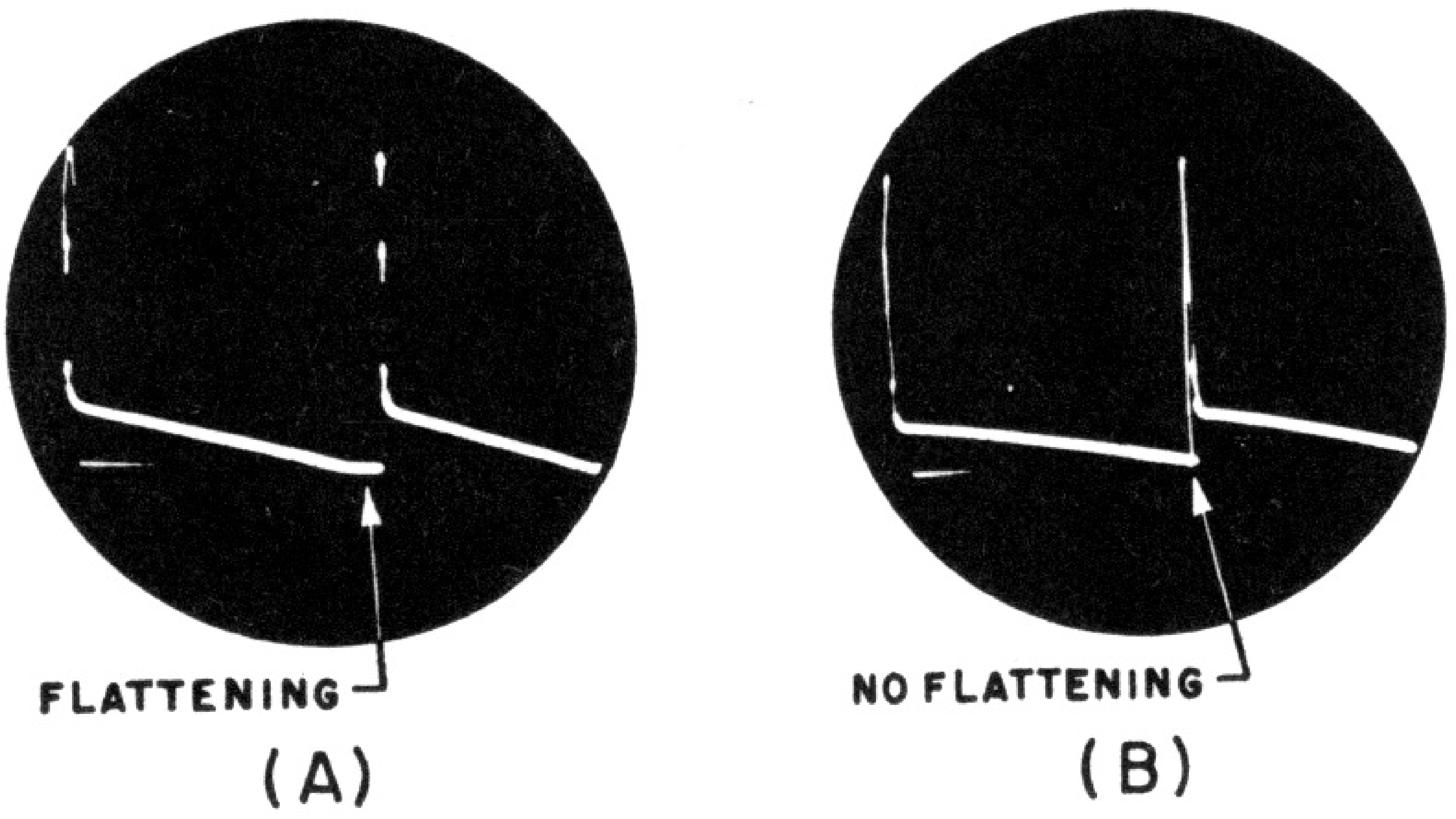

Fig. 3-6. Effect on the voltage waveform across the transformer primary of clipping in the grid circuit.

The sweep voltage waveforms observed in the plate circuit and the remainder of the vertical output circuit are essentially inverted, and enlarged replicas of the sweep voltage are applied to the control grid of the output tube. The phase is changed by the output tube.

The characteristics of these waveforms are determined to a substantial degree by the conditions in the grid circuit. For example, the clipping of the positive peak of the input sweep signal shown in Fig. 3-5 (A) is evident in the corresponding output signal voltage present across the primary of the transformer, shown in Fig. 3-6 (A). The signal at the same point, when there is no clipping in the grid circuit, appears as in Fig. 3-6 (B).

Note the difference between the two trace portions as they approach the point where the retrace begins. In the case of the clipped input signal,

Fig. 3-7. Effect of aggravated case of grid input signal nonlinearity.

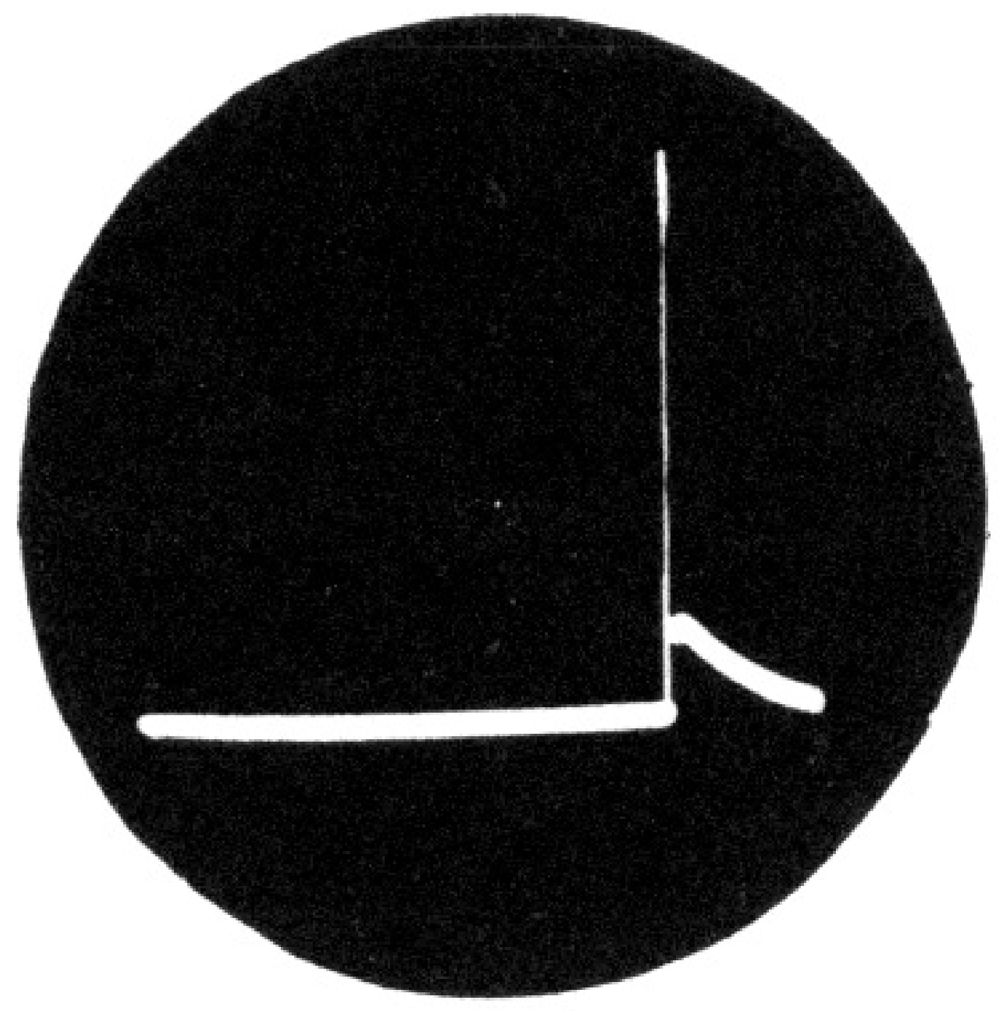

(A) of Fig. 3-6, the output signal flattens for an interval before retrace; whereas the output signal for the unclipped case, shown in Fig. 3-6 (B), continues increasing in amplitude until the instant retrace begins.

In the aggravated case of nonlinearity in the input sweep signal, illustrated in Fig. 3-4 (A), the output circuit sweep signal contains the same features except in slightly different form. The corresponding waveform is shown in Fig. 3-7. The substantially flat line to the left of the retrace spike corresponds to the flattened part of the trace portion of the input sweep voltage (Fig. 3-4), whereas the curved line to the right of the retrace spike in Fig. 3-7 corresponds to the nonlinearity rising trace portion of the input sweep voltage. The picture resulting from such voltage conditions would be very much compressed vertically.

The relative amplitudes of the trace and retrace portions of the voltage are different in different receivers because of the differences in design of the vertical output transformer. Naturally, the sharper the spike and the greater the ratio of reactance to resistance of the deflection coil, the higher will be the retrace voltage amplitude in the output circuit.

The three output circuit sweep voltage waveforms in Fig. 3-8 illustrate the effects of different input negative peaking signal amplitudes. The correlation here is between the appearance of these waveforms, especially as to the retrace spikes, the shape of the trace portions of the voltage, and the retrace lines as viewed on a raster free of picture intelligence but synchronized by received signals. The spreading of the output circuit retrace waveform when the input peaking voltage is too low (A) can be seen from the fact that the tube was conducting heavily before the retrace ended. The very thickening of the retrace line shows that the electron beam in the test scope has been slowed down, and the curvature of the trace shows the passage of time as compared to Fig. 3-8 (C).

The presence of oscillation in the voltage when the peaking spike has too much amplitude is shown in Fig. 3-8 (B). The oscillation appears at the end of the retrace, just before the trace starts. The disturbance due

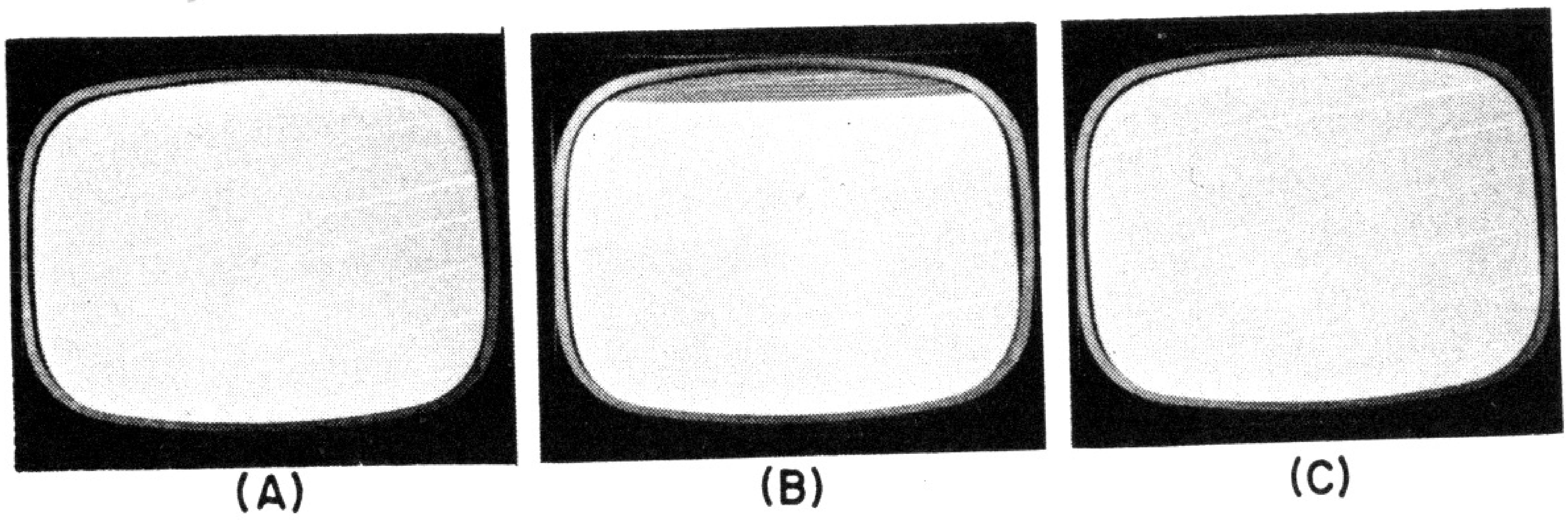

Fig. 3-8. Effect on output circuit voltage waveform of (A) insufficient, (B) too much, and (C) normal input voltage peaking.

to this action appears at the top of the tube screen. Compare (A) and (B) with the normal condition in (C).

The waveforms in Fig. 3-8 result from spreading the trace horizontally and vertically, as well as from vertical positioning adjustments, in order to place the proper portions of the traces on the test scope screen. The normal presentation of these waveforms is shown in Fig. 3-9. It is to be noted that the oscillation which is present in Fig. 3-8 (B) appears as a tiny pip extending below the start of the trace portion as shown in Fig. 3-9 (A). Similarly the slowed-down retrace in Fig. 3-8 (A) appears as slight curvature which is not too easy to see in Fig. 3-9 (B).

It might be well to comment on the general appearance of the trace portion of the sweep voltage as frequently seen on the scope screen. This applies to the waveforms shown in Fig. 3-8. The trace portion of the sweep voltage is the tilted straight line. Sometimes the tilt in this portion of the cycle cannot be seen; instead, it appears as a substantially horizontal line because either or both of two possible conditions. One is that the waveform has been spread so much horizontally (in order to show other details) that only a small segment of the trace part is being

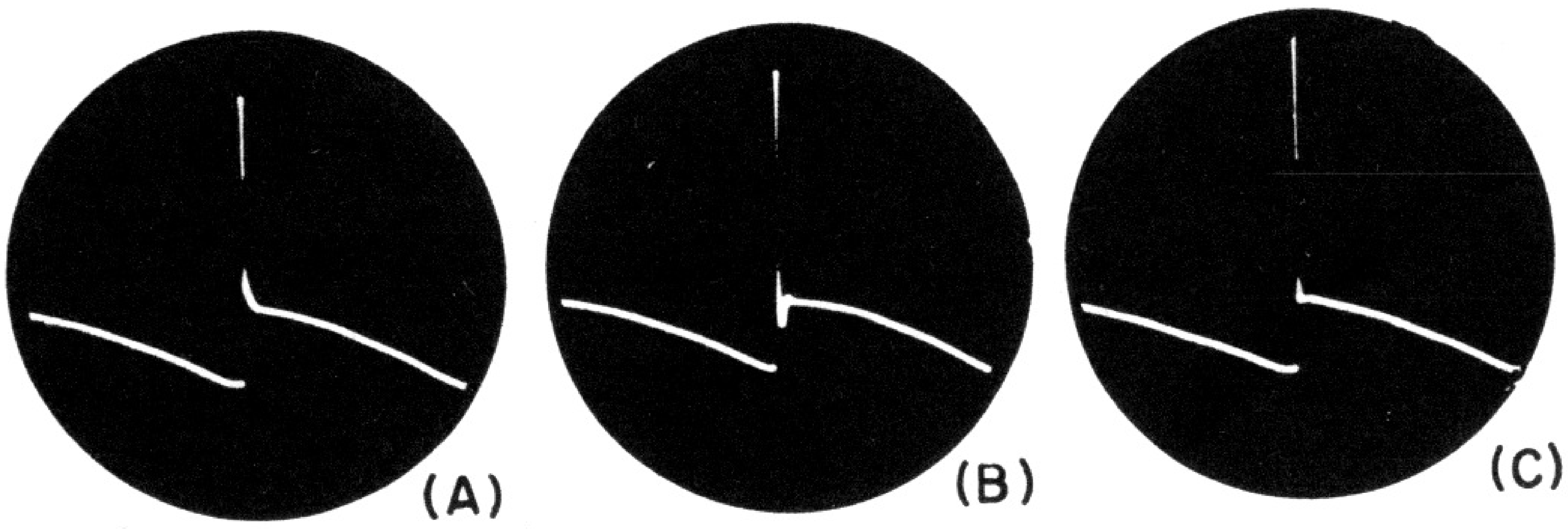

Fig. 3-9. The waveforms of Fig. 3-8 as they would look if not sufficiently spread by oscilloscope horizontal gain for observation of detail.

seen. This is so in Fig. 3-7. The other is the high ratio in peak-to-peak amplitudes of the trace and retrace portions of the voltage, and when it is desired to put the entire waveform on the screen, the attenuation of the entire signal by the vertical gain control is so high that the tilt corresponding to the peak-to-peak amplitude of the trace portion is lost.

Vertical Ringing Due to the Linearity Control

The vertical linearity control compensates for nonlinearity. Because it adjusts bias, this control also affects the output tube plate current and hence can create a condition which corresponds to excessive negative spike amplitude in the input signal. In other words it can cause vertical ringing, such as that shown in Fig. 3-8 (B). This may become a problem when, as the consequence of some other incorrect conditions, the vertical linearity control is called upon to effect the complete correction.

Relative Amplitudes of Parts of Output Sweep Voltage. The relative proportions of the trace and the retrace parts of the sweep voltage in the plate circuit of the output stage vary quite a great deal depending on the receiver design, especially the vertical output transformer and the yoke. In view of the variations found in these figures, a few examples might be of interest. They run from as high as 500 volts p-p for the trace portion and 1300 volts p-p for the retrace spike, to 180 volts p-p for the trace and only 200 volts p-p for the retrace spike. No definite ratio between these two values can be stated because they vary so much.

The ratio of over-all peak-to-peak sweep voltage, between the primary of the output transformer and the vertical deflection winding, also varies greatly according to the design. It may be as low as 4:1 or as high as 80 or 90:1. The lower the inductance and the d-c resistance of the vertical deflection winding, the higher is the voltage step-down ratio.

The Vertical Output Transformer

The general purposes of this component have been described. Functionally, if not in design, it parallels the duties of the audio output transformer. Inasmuch as some physical details are described in another chapter, they are not required here.

The factors that determine the selection of a vertical output transformer to work with a vertical output tube are the permissible distortion, electrical efficiency, power output, and the impedance transformation. The latter always is step-down and two types of transformer are used. These were shown in Fig. 3-1, where in (A) it is a conventional type and in (B) an autotransformer. Frequently the two varieties are interchangeable provided that two conditions are satisfied. One of these is the electrical ratings of the transformer; the second is the d-c which must be isolated from the deflection winding by means of a series capacitor.

Two electrical ratings are generally quoted in reference service data. These are the turns ratios and the d-c resistance of each winding. The turns ratios run from as low as 4:1 to as high as 90:1 (the greatest majority of transformer designs running around 10:1). As stated earlier, the design of the transformer is closely related to the design of the vertical output tube; hence there is not too much leeway in the pairing of these two components. Experimentally it has been found that the turns-ratio rating is critical. Permissible deviation from the turns-ratio, as used in the vertical transformer employed as original equipment, with any one vertical output tube type operated under a fixed set of conditions seems to be from about 5 to 7 percent (sometimes as high as 10 percent).

The impedance of the primary of the transformer with a fixed amount of d-c flowing through it, and a fixed amount of 60-cps voltage applied, is another major rating. Although this constant is referenced in purchase specifications issued by the receiver manufacturer, it does not appear among the information generally provided with replacement units available on the market. It might be well if such information were furnished because it, too, is a determining factor in deciding on the suitability of a component.

The primary impedance rating as described above reflects the inductance of the transformer, and this should normally be high. In this way the resulting impedance is high and has minimum effect on the action in the circuit. It is because of this that receiver manufacturers usually specify the acceptable minimum value of impedance .These vary from about 15,000 ohms minimum to as high as 30,000 ohms minimum over the range of turns-ratio previously stated, depending on the specific circuit design.

Reduction of the inductance of the transformer (hence impedance) for any one proper turns-ratio results in a number of undesirable effects. Linearity is impaired and it is usually accompanied by a rise in output tube plate current, which invariably is the case when height and linearity adjustments are made. Foldover at the bottom of the picture also results. The extra loading of the power supply by the increased output-tube plate current affects the performance of many other sections of the receiver adversely in such results as insufficient height, bad retrace, poor brightness, low output from the low-voltage power supply, and, in general, poor receiver performance.

The permissible tolerance in the primary impedance of the vertical output transformer in the downward direction is difficult to specify although tests have established that the effects of as little as 12 percent decrease from the specified design value is not only noticeable, but almost impossible to clear up by adjustment of related controls.

It will be recalled that the impedance ratio varies as the square of the turns-ratio. Hence, if a transformer is rated at 4:1 turns-ratio, the impedance transformation ratio is 4 x 4 or 16:1; a turns-ratio of 43:1 means an impedance transformation ratio of 43 x 43 or 1849:1.

Turns-ratio and voltage ratio are roughly the same. As a practical example, the peak-to-peak value across the primary of the transformer in a certain receiver was 1700 volts; the corresponding value of the sweep voltage across the vertical deflection coil was 90 volts; and the turns-ratio of the transformer was 18:1. This compares favorably with the ratio 1700:90 or 18:8; 1, a discrepancy of less than 5 percent. Under load, voltage ratio is slightly greater than turns ratio due to voltage drop in winding resistance and leakage reactance.

The Vertical Deflection Winding

The vertical deflection winding is a part of the vertical deflection system, but since the yoke receives detailed attention in a chapter of its own, too much discussion is not justified here.

The voltage across the deflection yoke is a duplicate of that across the secondary of the vertical output transformer. When observing vertical sweep voltage waveforms across the primary or the secondary of the output autotransformer, or across the deflection coil connected to such a transformer, it is imperative that the ground terminal of the scope not be connected directly to ground. The reason is that one side of these transformers is connected to the B+ supply system of the television receiver. The exception is when the measurement is made across the vertical deflection coil and this winding is isolated from the B+ in the autotransformer by a series capacitor.

The peak-to-peak values of sweep voltage generally encountered across vertical deflection windings vary from as low as 14 volts peak-to-peak, to as high as about 190 volts peak-to-peak.

Reference to Fig. 3-1 (A) and (B) discloses the presence of resistors across each of the vertical deflection coils. Their functions are explained in Chapter 6.

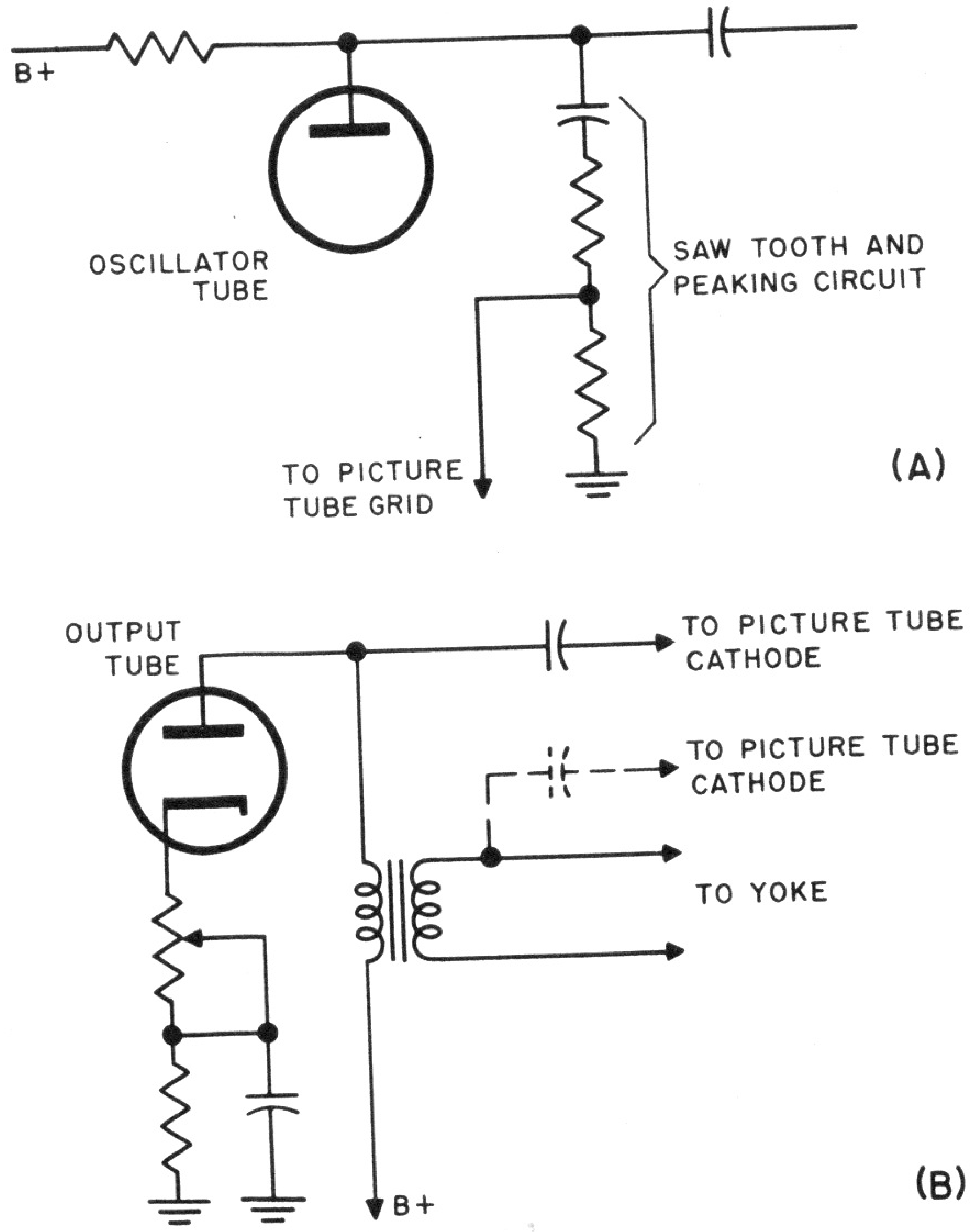

Fig. 3-10. Methods of obtaining vertical retrace blanking voltage from the vertical sweep system.

Retrace Blanking from Vertical Sweep System

Vertical retrace blanking is frequently effected by using a blanking voltage derived from the vertical sweep system. In one method a negative voltage is secured from the circuit in which the negative spike voltage is developed and it is fed to the control grid of the picture tube. This is shown in Fig. 3-10 (A).

In the other method, shown in Fig. 3-10 (B), the vertical retrace blanking voltage is obtained from the output system of the output stage; for example from either the plate circuit or from the secondary winding of the output transformer as shown by the dotted lines. The retrace pulse in both these circuits is positive; hence it is applied to the cathode of the picture tube via a capacitor.

Summary of Basic Vertical Output System Behavior

Summarizing the functioning of the basic vertical sweep output system, it is evident that the shaping of the vertical sweep voltage is affected by the performance of the output system, especially in the cathode and plate circuits of the output tube. It has also been shown that the shape of the vertical sweep voltage obtained from the vertical oscillator and fed to the input circuit of the output tube can have a major effect on the character of the display on the picture tube, especially the amplitude of the negative peaking pulse. Also it is significant to note that faults stemming from improper conditions cannot always be seen in the vertical sweep *current* waveform; that the waveforms of the sweep *voltage* are very much more informative. Examination of the synchronized raster without any picture information (contrast retarded) can disclose the presence of troubles in the system by the nature of the vertical retrace lines. Finally, it has been emphasized that close attention must be paid to the relative amplitudes of the trace and retrace portions of the output from the vertical oscillator.

Stating the relative amplitudes of the trace and retrace portions of the sweep voltage fed to the vertical output tube, as was the practice in the early days of television, should be revived, although it is possible to achieve the correct proportions of this voltage by experiment.

In the segregation of difficulties in the vertical sweep system, problems of frequency relate to the oscillator, whereas problems of waveshape include the oscillator and the output stage.

Variations in Vertical Sweep Output Systems

Variations from the basic vertical output system circuitry already described are those systems which make the output tube a part of the oscillator circuit. These are the circuits in which the output tube is often referred to as the *discharge* tube. In these circuits, one of which is shown in Fig. 3-11, the output tube is a part of the multivibrator circuit. The positive pulse, which is developed in the output plate circuit, is coupled back in part to the grid circuit of the "oscillator" stage and serves to trigger or "discharge" the sawtooth-voltage-making capacitor. This is C4 in the circuit and the resistor responsible for the negative spike is R5.

One difference in behavior of the output tube in some of these circuits is that it is driven to cut-off or beyond during the retrace portion of the input sweep voltage. Reference to this was made in a preceding discussion in connection with the operation of some pentode-type output tubes, although in Fig. 3-11, the pentode output tube is triode connected. The sudden fall in plate current causes the generation of a positive pulse in the plate circuit; hence it is justifiable to refer to the primary

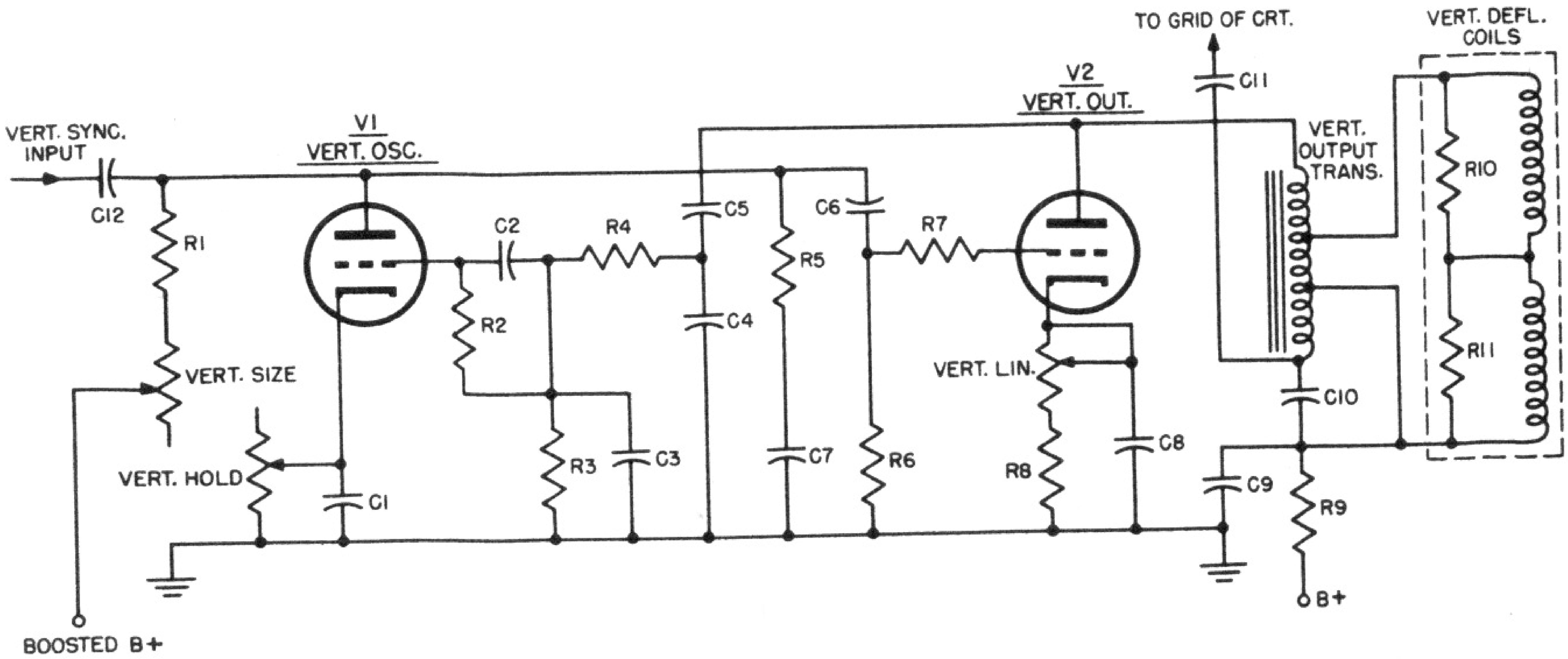

Fig. 3-11. Type of vertical output circuit in which the vertical output tube is part of the generating multivibrator.

of the output transformer as being the source of the retrace portion of the sweep voltage in the output circuit.

Systems of the kind shown in Fig. 3-11, and simpler or more elaborate ones, are usually referred to as self-excited vertical-output sawtooth generators. The feedback is from the plate circuit of the output tube using some sort of a voltage divider, either capacitive or combinations of R and C to control the amount of voltage fed back to the other tube. RC filter systems are found in the feedback circuit to minimize the possibility of horizontal pulses coupled into the vertical output system via the deflection yoke from riding on top of the vertical sweep voltage. The capacitor C2 in Fig. 3-11 serves the purpose of bypassing these undesired voltages, which can interfere with interlace.

CHAPTER 4

HORIZONTAL OUTPUT SYSTEM OPERATION

The horizontal output system in electromagnetically deflected TV receivers performs several functions. One of these is to provide linear sawtooth currents of controllable amplitude in the horizontal deflecting winding of the yoke. Another is the generation of the high d-c voltage required by the second anode of the picture tube. (In a few isolated instances the second anode voltage is generated in a separate system.) Complementary to these functions is another which makes possible the recovery of electromagnetic energy that otherwise would be wasted, thereby gaining a substantial improvement in operating efficiency. All these duties are explained in this chapter.

The horizontal output systems used in commercial TV receivers are of various types. All stem from the basic system discussed in this chapter. Modifications of it are explained in Chapter 5. The basic arrangement is shown in block form in Fig. 4-1. The components which contribute to the end product are appropriately labeled, but their relative locations in the over-all block do not necessarily indicate the interconnections.

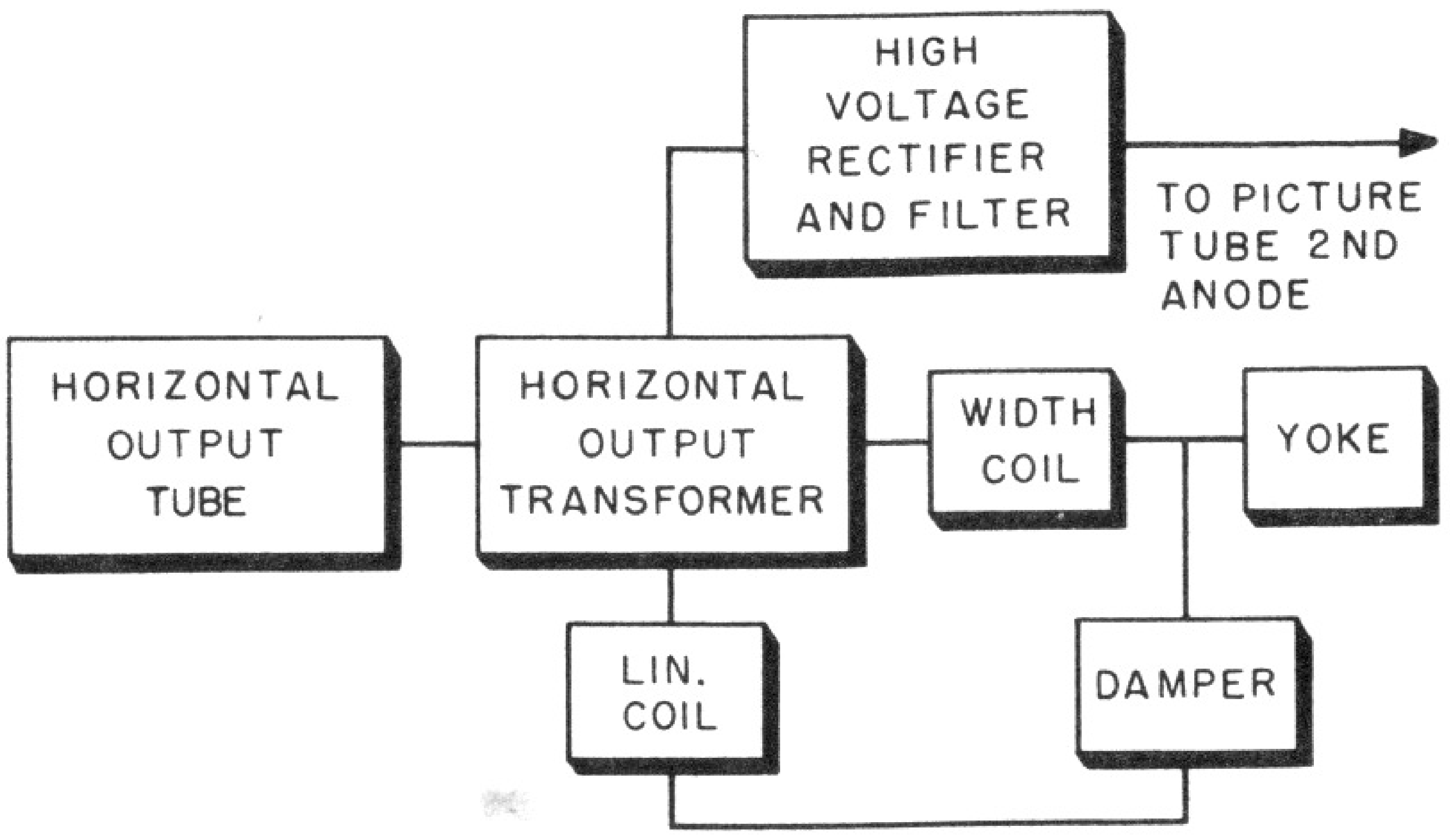

Fig. 4-1. Block diagram of horizontal output system.

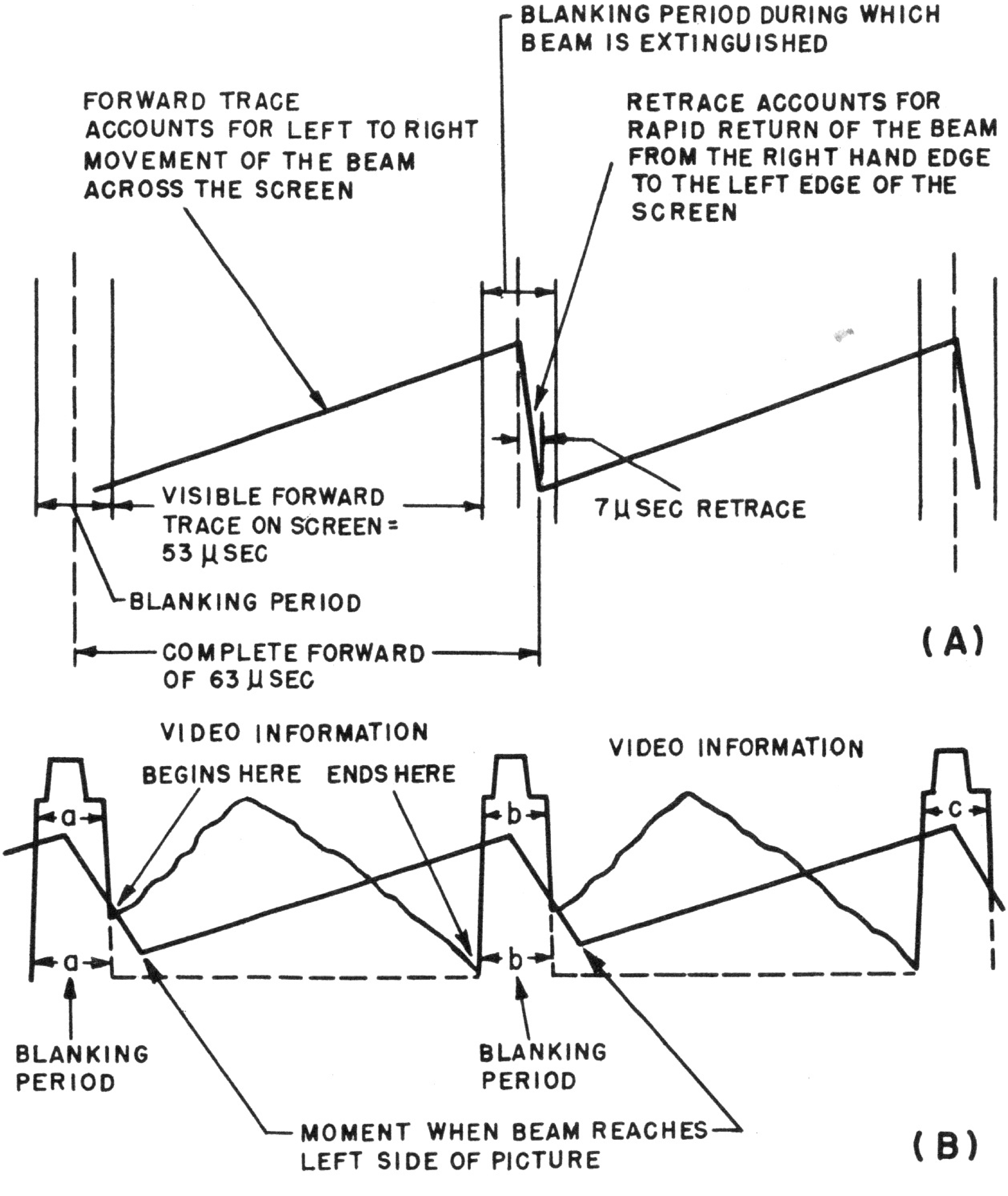

Fig. 4-2. Retrace time is determined by the design, condition and adjustment of the receiver sweep circuits. If proper, it should take place within the blanking period of the received signal as at (A). If retrace in the receiver is too long, it may exceed the blanking time and extend into the picture information, as shown at (B).

The frequency of operation in the horizontal output circuit is 15,750 cps. It corresponds to a total horizontal sweep time of about 63 μsec, which is divided into two parts – the *forward* trace and the *retrace.* The forward trace time interval is about 56 μsec, and the system is so designed that the retrace action occurs in about 7 μsec. This is shown in Fig. 4-2 (A).

Accompanying the scanning movement of the electron beam in the picture tube is a *blanking* action whereby the electron beam is extinguished during the retrace. In this way the picture display is not marred by retrace lines as the beam snaps back from the right-hand edge of the picture tube screen to the left-hand edge. The time allowed for horizontal blanking is 10 μsec. The graphs in Fig. 4-2 (A) show that the beam blanking interval begins *before* each forward trace scan has been completed and continues in force for a slight interval *after* the next forward trace scan has begun. The conditions shown in Fig. 4-2 (A) represent normal operation, wherein the retrace time is *less* than the blanking time.

In Fig. 4-2 (B) is shown a different state. Here the sweep retrace time is deliberately made longer than the blanking time of 10 μsec. The successive trains of video information in each scanning line are seen to begin *before* the beam has been returned to the left-hand edge of the screen and *foldover* occurs at the left side of the picture. It is interesting to note that the blanking interval is a function of the control signals *generated at* the *transmitter,* whereas the retrace sweep time is a function of the *conditions set up in the horizontal output system of the receiver.* In other words, the attainment of the required high-speed retrace so that the electron beam is at the left edge of the screen and ready to receive each successive line of video information, depends on the constants of the horizontal output system in the receiver.

In order to achieve the required retrace time of 7 μsec, a special set of electrical circumstances is established in the horizontal output system. It is made resonant to a frequency for which the time of a half-cycle approximates 7 μsec. This frequency is between 70 and 72 kc. In this discussion we shall assume it to be 70 kc.

Proper resonance in the horizontal output system is one of the cardinal conditions of good receiver performance. All the components used therein become a part of the resonant circuit. This includes the inductance and distributed capacitances of the horizontal output transformer, the horizontal deflection windings, the linearity coil, the width coil, the damper tube, and the high-voltage rectifier tube.

Shock excitation of a resonant system results in the flow of cycles of current of diminishing amplitude at the frequency of resonance. With the system resonant to 70 kc, one cycle of current is completed in roughly 1/70000 sec, or 14 μsec; and a half-cycle is completed in about 7 μsec – the time required for the retrace. When these transient currents flow through the deflection windings during a portion of the complete horizontal sweep cycle, the electron beam is snapped from the right-hand edge of the picture tube screen to the left-hand edge in the required short time of 7 μsec, this being less than the blanking period.

Whether or not the required retrace speed will be achieved is a function of the constants of the components in the horizontal output system. If for some reason the frequency of resonance is lowered below about 45 kc, the retrace time will exceed the limit set by the blanking time. As a matter of fact, it is quite common for receiver manufacturers to stipulate that the minimum resonant frequency in the horizontal system should not be below 56 kc. This requirement is set when the horizontal output transformers are ordered, and thus it affects the remainder of the components that are used in the system. It stands to reason, therefore, that the selection of replacement components for the horizonal ouput system cannot be a haphazard affair, nor can the matter of distributed capacitance in the system be treated lightly.

Action in the Horizontal Output System

The actions in the horizontal output system during operation generally are considered as occurring simultaneously. However in order

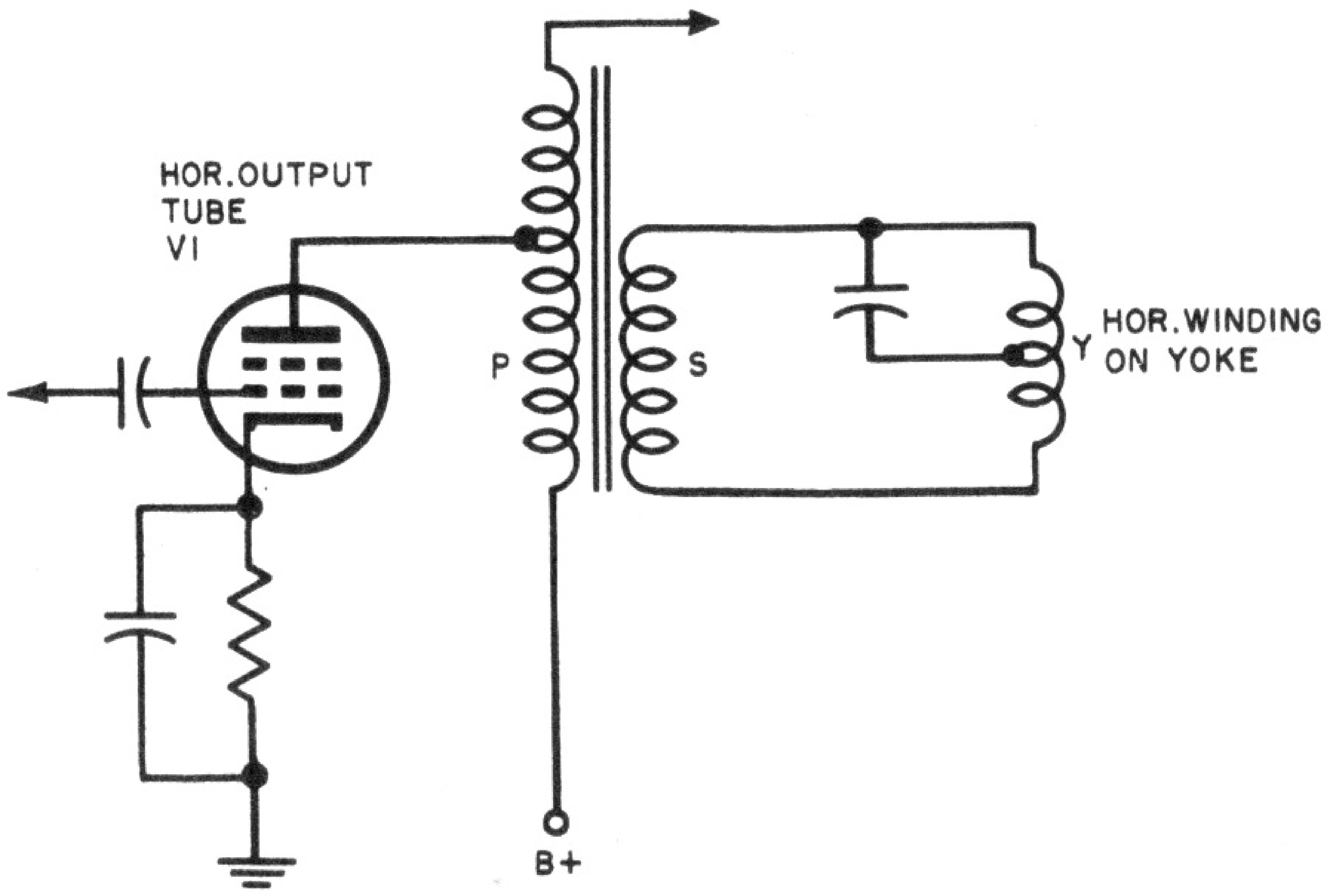

Fig. 4-3. Basic simplifid schematic diagram of the horizontal output circuit. Certain components have been omitted here to clarify explanation of the first stage.

to explain them in a logical manner it is necessary to take a different approach — as if the happenings were consecutive. To do this the basic horizontal output system shown in Fig. 4-3 is sectionalized both as to final results and the phenomena underlying them. The explanation of the complete basic circuit will be done on a progressive basis; hence all the components usually found in such circuits will not appear in the first explanation. They are added during the step-by-step analysis.

The Output Tube, Transformer, and Yoke Winding

The circuit of the horizontal output tube, horizontal output transformer, and the horizontal yoke winding are shown in Fig. 4-3. This is a part of the basic system, and while variations will be found in commercial receivers, the general principles of operation are typical. The fundamental requirement is to generate the sweep currents in the horizontal deflection winding in the yoke.

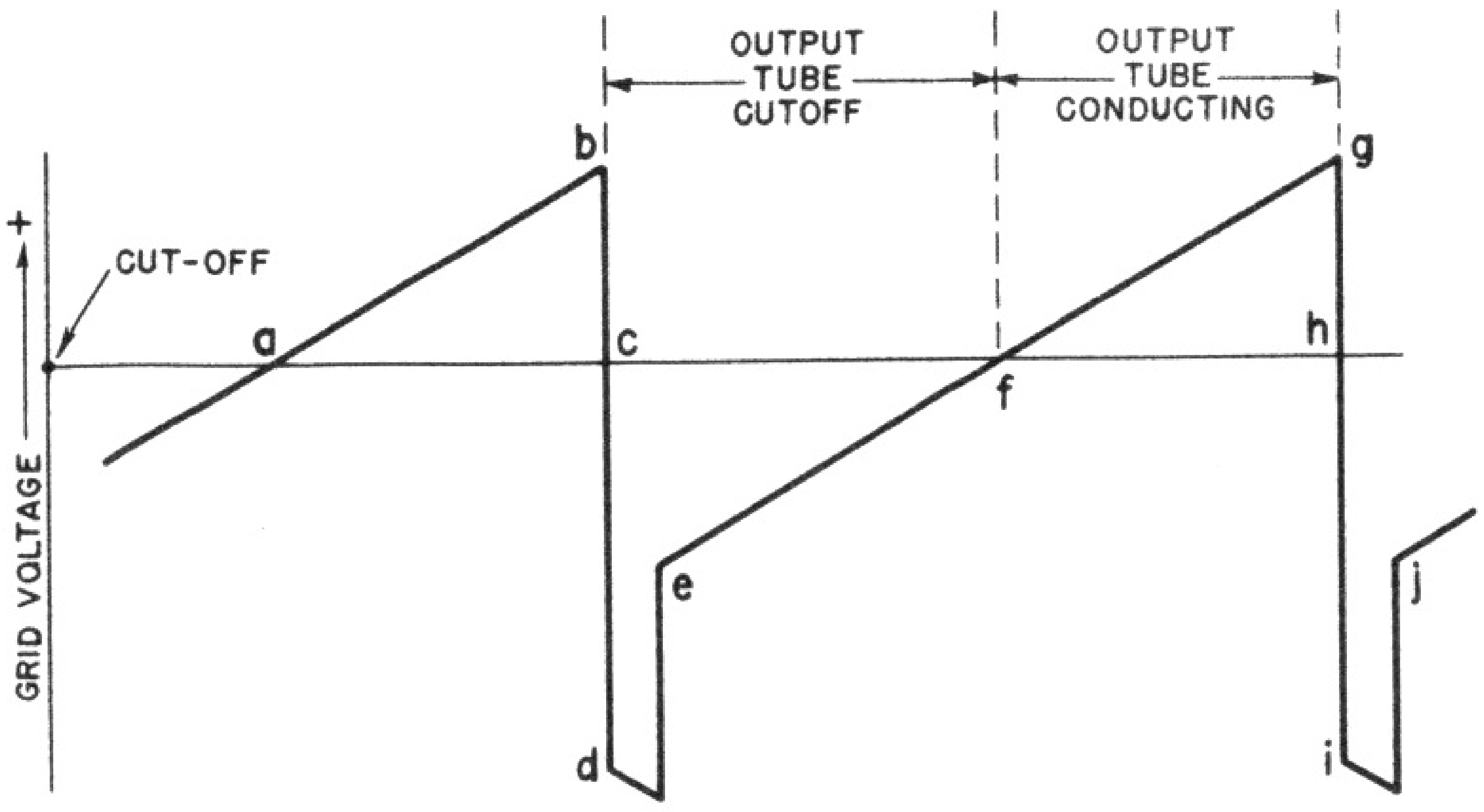

OUTPUT TUBE GRID VOLTAGE (A)

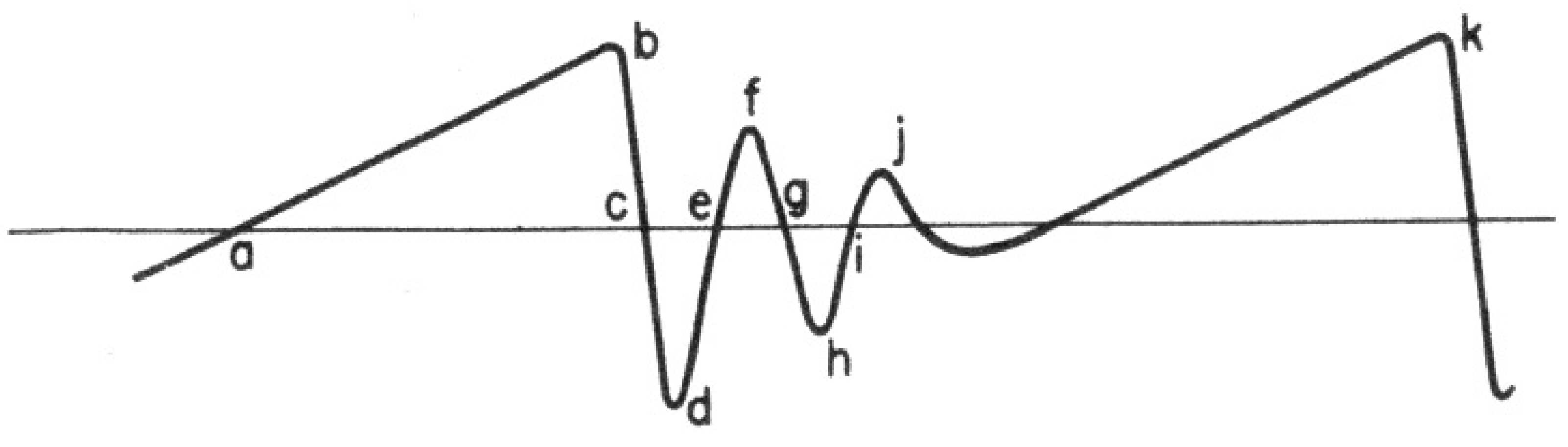

YOKE CURRENT (UNDAMPED) (B)

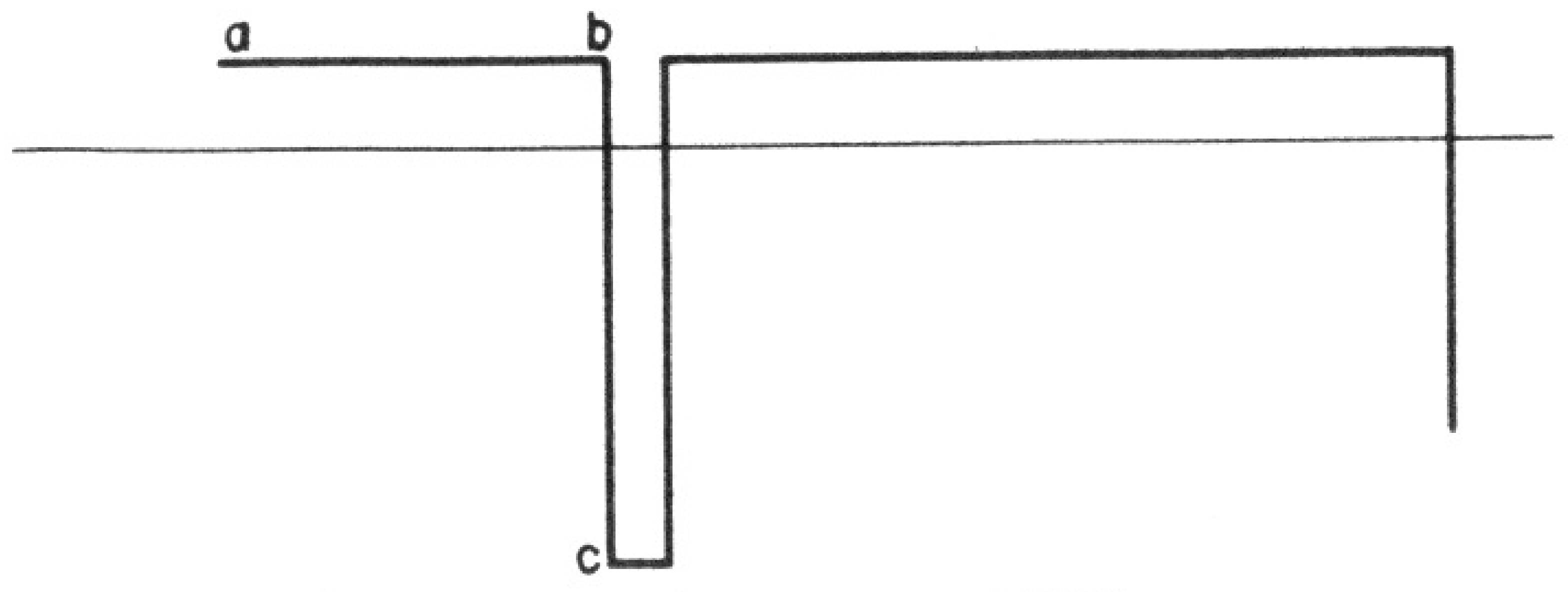

YOKE VOLTAGE (COUNTER-EMF) (C)

Fig. 4-4. Pertinent waveforms important in the discussion of the operation of the horizontal output circuit. The yoke current depicted in (B) is that which would exist if there were no damping. Damping action is subsequently covered.

The output tube is a beam power pentode (or pentodes in some instances) usually used as a Class B or C amplifier. The fundamental distinction between the Class B and Class C operating categories is the duration of plate current flow compared to the time required for one cycle of the input signal voltage. In the horizontal output stage, plate current flows only during a relatively small interval of the input signal voltage cycle as received from the horizontal sweep oscillator system.

The sweep signal voltage fed into the output tube is symbolized in Fig. 4-4 (A). It is a combination of a sawtooth and a rectangular voltage; in other words a trapezoidal shape. If the waveform is not spread sufficiently on the test scope screen, the negative peak looks like a thin spike. The signal voltage is made up of two parts, a positive going sawtooth of fairly linear character (*e-f-g*) and a negative going peak (*b-c-d*). The negative spike is a very important part of the input signal voltage fed to the output tube. It keeps the output tube control grid at a very high negative voltage, therefore at plate current cut-off for a prescribed period of time — the retrace time and a little longer.

The operating electrode voltages applied to the horizontal output tube and those developed during the application of the input sweep voltage set the periods of conduction and nonconduction of the tube. In other words, they establish the plate current cut-off point. Although the particular set of operating and signal voltages may differ in different receivers, the operating conditions for the output tube relative to the sweep voltage input can be symbolized as shown in Fig. 4-4 (A). The tube starts conducting about half-way up the positive going sawtooth and continues to conduct for the remainder of the positive going sawtooth (*a-b* and *f-g*). The tube is cut off during the remainder of the cycle. Since we require a starting point for the discussion, let it be the first instant of conduction (plate current flow). This is point *a* on the first representation of the positive going sawtooth.

From this point on we must correlate the contents of the sectionalized schematic Fig. 4-3 with a number of progressive occurrences, these being shown in Figs. 4-4 through 4-7. When V1 plate current flows through the primary P, an induced voltage causes current flow in the secondary S, and in the yoke winding Y. Accordingly, the instant before conduction starts in the output tube, its plate current is zero, hence the yoke current is zero. At the instant *a* in part (A) of Fig. 4-4, the positive going sawtooth voltage at the grid of the output tube raises the control grid voltage above cut-off and plate current flow begins. Simultaneously with the current flow through the transformer primary, forward trace sweep current starts flowing in the yoke winding; hence, points *a* in Fig. 4-4 (A) and (B) are in correspondence.

Concurrent with the rise of the input sawtooth sweep voltage an increasing amount of linearly rising plate current flows in the output tube plate circuit and in the transformer primary, and therefore through the yoke winding, until the peak value of the input sawtooth voltage is reached. This corresponds to maximum plate current and maximum yoke current, or points *b* in Fig. 4-4 (A) and (B). With the rise in yoke current having been in one direction starting from zero, there occurs a gradual build-up of the electromagnetic field around the coil, and a rise in the amount of energy stored in the coil. Because, as has been explained, the horizontal output load is mainly inductive, the first small sweep current rise in the yoke results in a self-induced voltage across the yoke, which, because of the direction of the change current flow, we show as being positive in (C) of Fig. 4-4. Since the rise in sweep current occurs at a linear rate (rate of change constant) the counter-emf has a constant value from *a* to *b* corresponding to the yoke current rise from *a* to *b*.

Now, at the moment before conduction started in the output tube and when the yoke current was zero, the beam in the picture tube was undeflected, hence its position was at the center of the screen. At the first instant of conduction yoke-current build-up, the beam starts moving from the center towards the right-hand edge of the tube screen, and by the time the sweep current has increased from *a* to *b* in Fig. 4-4 (B), the beam has advanced to the right side of the screen, as shown by *a-b* in Fig. 4-7. Point *b* on this illustration coincides with: (1) the peak value of the positive going sawtooth on the grid of the output tube; (2) peak plate current; (3) the maximum sweep current in the positive direction; (4) the maximum amount of field energy stored in the yoke; and (5) the limit of time duration of the constant-level counter-emf of positive polarity.

Suddenly the sweep voltage input to the grid of the horizontal output tube V1 is reversed in its polarity; now it is negative-going and very rapidly drives the tube to plate current cut-off (nonconduction) and far beyond that point in the negative direction. See *b-c-d* in Fig. 4-4(A). As far as the output transformer is concerned relative to the output tube, since there is no conduction in the output tube there is no plate current flow through the transformer primary P, nor in the secondary S. See Fig. 4-4 (A). Neither is any driving force being applied to the horizontal deflecting winding to build or maintain the current, or to continue building up an electromagnetic field around the winding, and the tube provides no loading on the output transformer.

Several things happen. The electromagnetic field around the yoke winding collapses. The sudden collapse of the field tends to maintain current in the same direction as that which caused the rise in the field. The rate of change of this current is very high; consequently as the current starts to change, it produces a very high counter-emf pulse across the yoke winding.

Let us digress long enough to apply to the case at hand the principles set forth in Chapter 1. The situation is illustrated in simple form in Fig. 4-5. In this figure, e_s represents the voltage derived from the output transformer secondary winding as a source, while e_L represents the self-induced (counter) emf in the yoke winding. Because counter emf in an inductance depends upon current *change* rather than simply current *flow,* the current arrows indicate Δi_1, rather than i_1, because current *change* is what is important in this case.

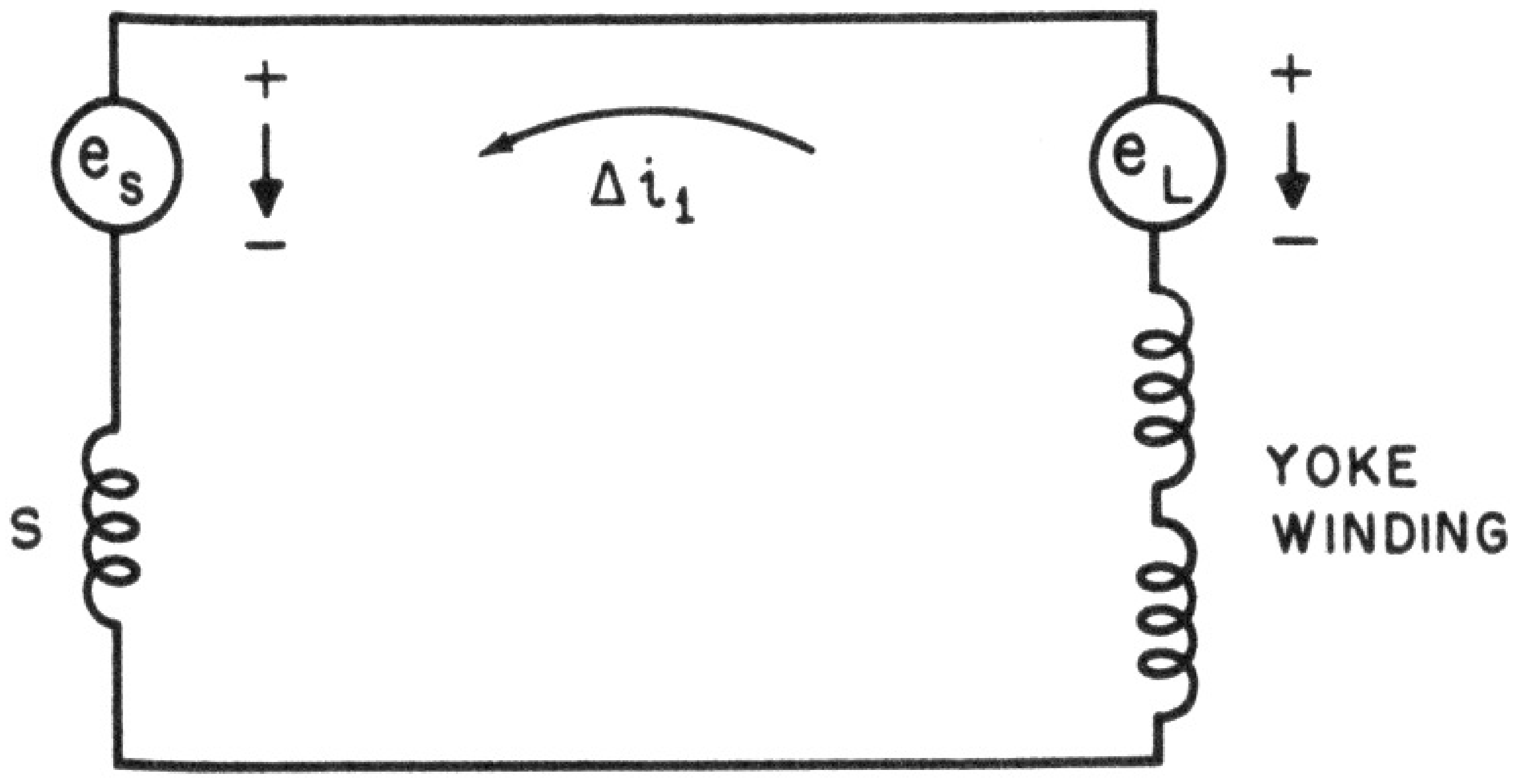

(A) FORWARD TRACE PERIOD POLARITIES

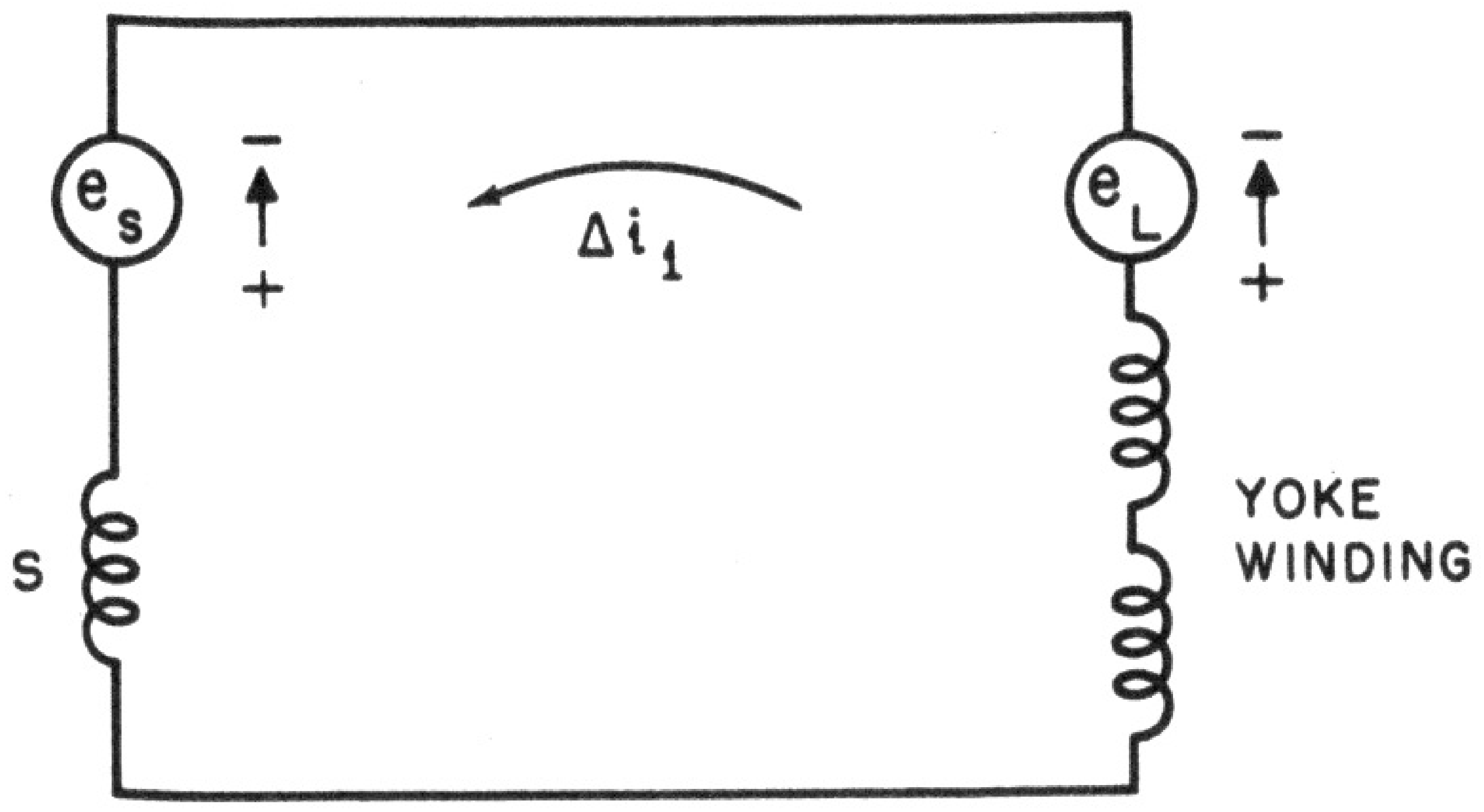

(B) RETRACE PERIOD POLARITIES

e_S = TRANS. SEC. VOLTAGE
e_L = SELF-INDUCED emf IN YOKE WINDING

Fig. 4-5. Polarities of transformer-secondary voltage, current change, and yoke winding counter-emf for (A) the forward trace period and (B) the retrace period.

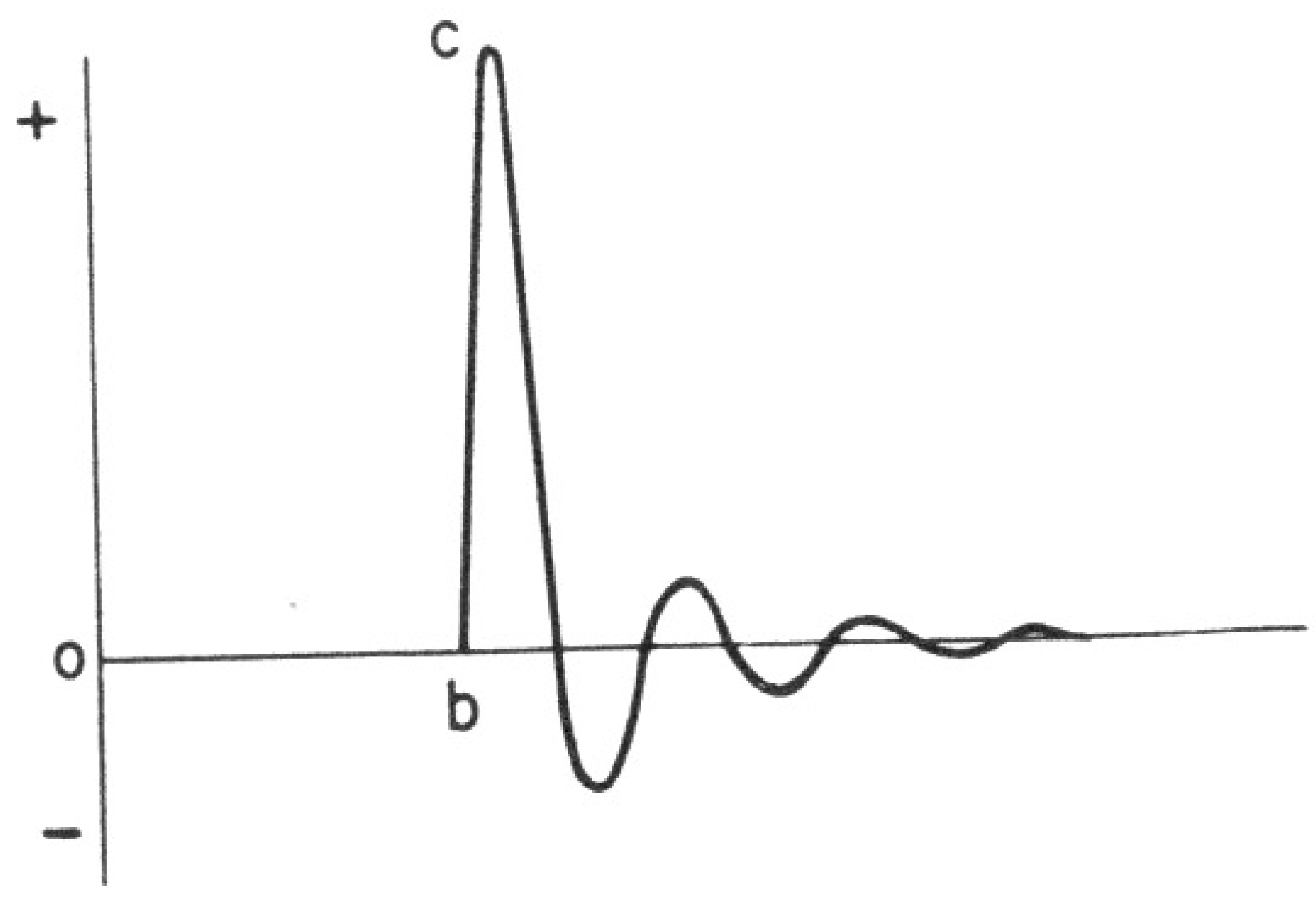

Fig. 4-6. Inductive kick pulse which appears between the plate of V1 and ground during retrace.

Part (A) illustrates conditions during the forward trace period. Voltage e_s is rising linearly. Therefore i_1 is also rising linearly. Since e_L always opposes current *change,* it has the polarity shown, tending to resist the rise of current. In this particular case, it just *happens* to resist current flow as well as current change. Note that this counter-emf is such as to make the top of the yoke winding positive, as we have stated in earlier explanations. Also, because the current change during the trace period is constant, the voltage e_L is constant for this period.

Now consider what happens an instant after the trace period ends and retrace starts (just after *b* in Fig. 4-4) as illustrated at (B) of Fig. 4-5. Although the current *flow* is still in the same direction, the current *change* has reversed and is now negative, as indicated by the current change arrow $\triangle i_1$. The change of direction of the change of current must be accompanied by a change of direction of counter-emf e_L as indicated by the new label on e_L. This makes the voltage across the yoke winding negative at its top terminal during the retrace period. Since the rate of change of current during this period is much greater than the rate of change during the forward trace, the self-induced counter-emf in the yoke winding is much greater. The length of the retrace time is less than that of the trace, so the duration of the retrace yoke voltage is less. Thus, during the retrace period, a long thin negative pulse of voltage appears between the top and bottom terminals of the yoke winding, as illustrated in Fig. 4-4 (C). With the yoke winding Y being connected across the transformer secondary S, the high momentary inductive kick across the yoke also appears across the secondary winding. There, by transformer action, it appears across the primary winding P as a *stepped-up* pulse of voltage. It is stepped-up by an amount corresponding to the turns-ratio between the primary and secondary windings. This is a step-down ratio when looking from the primary towards the secondary, but becomes the reverse, or a step-up ratio when looking from the secondary towards the primary. Hence, a high pulse of voltage momentarily appears between the plate of the output tube and ground, as shown in Fig. 4-6. The inductive kick voltage was *negative* across the yoke, but it is *positive* across the primary P, and therefore between plate and ground because of the *polarity inversion* which takes place in the transformer. This action is in conformity with ordinary transformer behavior.

The emf built up across the yoke when the output tube plate current is cut off amounts to from 1,000 to perhaps 1,500 volts peak. The resultant pulse voltage at the plate of the output tube can amount to from 4,000 to as high as 6,000 volts peak, depending on the design of the output transformer. All this happens while the output tube is nonconducting, and it is the function of the negative spike, *c-d-e* in Fig. 4-4 (A), on the trapezoidal input sweep voltage to the output tube, to maintain the latter at *plate current cut-off* all the while that the high positive voltage exists on the plate of the tube.

Later on you will see how the voltage pulse which appears across the output transformer primary is stepped-up some more and applied to the high voltage rectifier.

But this is not all that happens. It must be remembered that the output tube plate current has been cut off. It can be considered as being cut off extremely rapidly an instant after the positive going input voltage sawtooth has reached its peak value *b*, in Fig. 4-4 (A), and it remains that way for the period embraced by the input voltage points *b-c-d-e-f* in the same figure. This is quite an appreciable amount of time.

We remarked that the whole horizontal output system, inclusive of all the components, is made resonant to some frequency, which we assume here to be 70 kc. While it is true that Fig. 4-3 is only a sectionalized schematic and does not contain all the components which comprise a complete horizontal output system, it still is possible to visualize this circuit as being resonant to 70 kc. Assuming this to be true we can proceed to the next action. Perhaps it is in error to refer to it as a successive happening, because many of these actions are virtually simultaneous. It is for the sake of explanation that we consider the action as being sequential.

The high inductive kick that develops across the yoke winding when the output tube plate current is cut off, appears not only across the primary circuit of the transformer, but in addition it also shock-excites the whole output system into oscillation. The momentary voltage shock causes the flow of transient or oscillatory currents throughout the circuit. These currents are at the frequency of resonance of the system. Also, it causes secondary oscillatory currents to flow in the different parts of the system at whatever may be the individual resonant frequencies of the components which display properties of inductance and capacitance. We can disregard these currents, although they do account for some of the transients which appear on the waveforms at different points in the horizontal system.

It is difficult to say where these 70-kc oscillatory currents originate; but wherever they may occur, the fact remains that they appear throughout the system. With the horizontal deflecting winding being a part of the circuit, the oscillatory currents appear in the yoke winding which, after all, is the item of main interest at the moment. As far as the yoke is concerned, it cannot distinguish between the origin of the currents; nor does the electron beam, which is being deflected by the field created by the current flow in the yoke, distinguish between one origin or another of the sweep current. So the oscillatory current which flows in the yoke behaves like the sweep current and causes motion of the beam.

The beginning of the transient yoke current coincides in time with the sudden cut-off of the output tube plate current, and it appears in the yoke winding as a current of maximum positive amplitude, which decreases to zero at a rate determined by the constants of the resonant

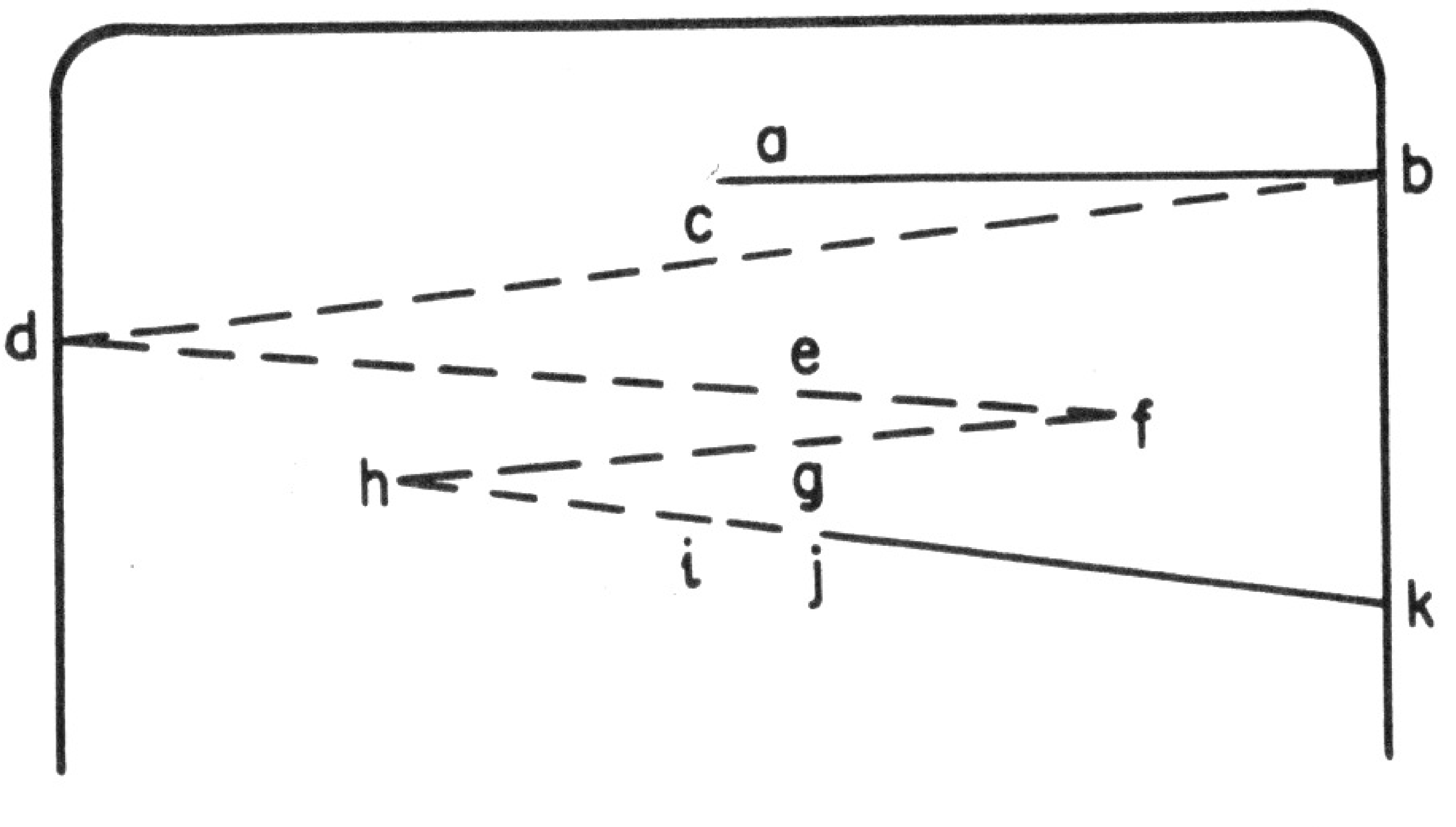

Fig. 4-7. How the beam spot on the picture tube screen would react if there were no damping. Reference letters correspond to those of Fig. 4-4 (B). Of course the relative dimensions of the raster and vertical line spacing has been greatly exaggerated for the sake of clarity.

circuit. Being a 70-kc current, the first quarter-cycle is completed in ¼ (1/7000) or 3.57 μsec, or 3.6 μsec in round numbers. This is shown as *b-c* in Fig. 4-4 (B).

This decreasing transient current has a direction of flow opposite to that which moved the beam from the center of the screen to the right-hand edge; hence it returns the beam from the right-hand edge to the center of the screen, except that it does it at a much greater velocity than the forward trace motion. This is shown as the beam advance *b-c* in Fig. 4-7.

The transient current generated by the shock excitation of the horizontal output system does not consist, however, of only one quarter-cycle; one quarter-cycle is followed by the next, and this is a current increasing in the opposite direction, reaching a maximum negative from zero. Hence the field across the yoke starts building up in the opposite direction as the current increases to its maximum negative peak (see *c-d* in Fig. 4-7) and the beam is moved from the center of the screen to the extreme left-hand edge. This position coincides with the maximum negative peak of the 70-kc current or *d* in Fig. 4-4 (B). The second quarter-cycle, like the first, is completed in 3.6 μsec, and the beam has been moved from the extreme right-hand edge to the extreme left-hand edge of the screen in a total time of 7.2 μsec. In other words, the *retrace* has been completed in 7.2 μsec. This complete excursion is shown as *b-c-d* in Fig. 4-7.

While all this is happening, the output tube is still in the plate current cut-off condition, and to all intents and purposes, the sweep voltage input to the output tube has contributed nothing to the *retrace* current in the horizontal deflecting winding. Of course the output tube has permitted this current to be generated by (1) being in a cut-off state; (2) not loading the transformer, and (3) permitting the transformer, and the whole output system to be shock-excited.

Again considering the sectionalized circuit of Fig. 4-3, nothing but the inherent resistance of the components is present in the circuit to damp the oscillatory current. Therefore, having been started, the transient current continues to flow in diminishing peak amplitudes. Consequently, the second quarter-cycle is followed by the third, and the yoke current starts decreasing from maximum negative to zero (*d-e* of (B) in Fig. 4-4).

Now the current is *positive* going, and the effective change in direction of the current and the resultant electromagnetic field starts moving the electron beam from the left-hand edge of the screen to the center, which position coincides with the fall of the current to zero. This is shown as point *e* in Fig. 4-4 (B) and point *e* in Fig. 4-7. Once more, being a 70-kc current, the third quarter-cycle is completed in 3.6 μsec.

The fourth quarter-cycle of transient current in the yoke follows the third, but because of the resistance in the circuit, its peak amplitude is less than that of the first quarter-cycle. But the rise in current from zero to its new maximum positive value is still in the positive going direction; hence the beam continues moving towards the right from the center of the screen and reaches point *f* in Fig. 4-7, which corresponds to point *f* in the sweep current curve of Fig. 4-4 (B).

In similar manner, another cycle of transient current is competed. This is shown by the sweep current curve *f-g-h-i-j* in Fig. 4-4 (B) and results in a to-and-fro motion of the beam past the center of the tube, as indicated by points *f-g-h-i-j* in Fig. 4-7. Two oscillatory current cycles have been completed between *b* and *j*. This accounts for a total time lapse of somewhat more than 28 μsec, which approximates the interval during which the output tube plate current is cut off. At the end of that time period, which coincides with the point *j* on the yoke current curve, the output tube starts conducting again – point *f* on the positive-going sawtooth input voltage of Fig. 4-4 (A) – and the forward trace sweep current starts flowing. The beam is moved from slightly to the right of center (*j* in Fig. 4-7) to the right-hand edge (*k*) of the tube.

Obviously a sweep current, such as that shown in Fig. 4-4 (B), and the resultant spot motion shown in Fig. 4-7, are unsatisfactory for proper display on a picture tube screen. The picture would be badly marred by foldovers and by the great amount of nonlinearity in the motion of the beam. These conditions are corrected when the remainder of the components are added to the sectionalized circuit of Fig. 4-3. Only the first half-cycle of the transient oscillatory current is permitted to remain as we have described, because it provides the required speed of beam retrace. It is the remaining oscillations in current which are modified and damped so as to eliminate the to-and-fro motion of the beam across the tube screen.

How all the above and more is accomplished is described on subsequent pages, but in the meantime, we have shown that the *retrace* sweep current is not transferred from the horizontal output tube to the yoke; rather that it issues from the shock-excitation of the resonant horizontal output system. It has also been shown that more than just casual attention must be paid to the selection of a yoke or a horizontal output transformer which is to be used as a replacement with existing components, if the desired performance is to be achieved.

Adding the Damper Tube and the Linearity Circuit

Let us examine the action of those components which help remove the transient oscillations after the retrace has been completed; that is, those changes in the yoke current which would cause the to-and-fro motion of the beam past the center of the tube screen if such current changes were not suppressed. To repeat, movement of the beam due to the shock-excitation of the system would not end with the completion of the first half-cycle of this current (the retrace). Further, oscillatory movement of the beam would occur unless damped, and it is these oscillations present in the yoke current that must be removed. When this is done, the yoke current causing the first half of the forward trace becomes a linearly varying current.

The main contribution to this result comes from the damper tube, with some help from the linearity of the circuit.

The elaborated schematic is shown in Fig. 4-8 (A) and (B). These two are effectively identical, although they may appear different. In both

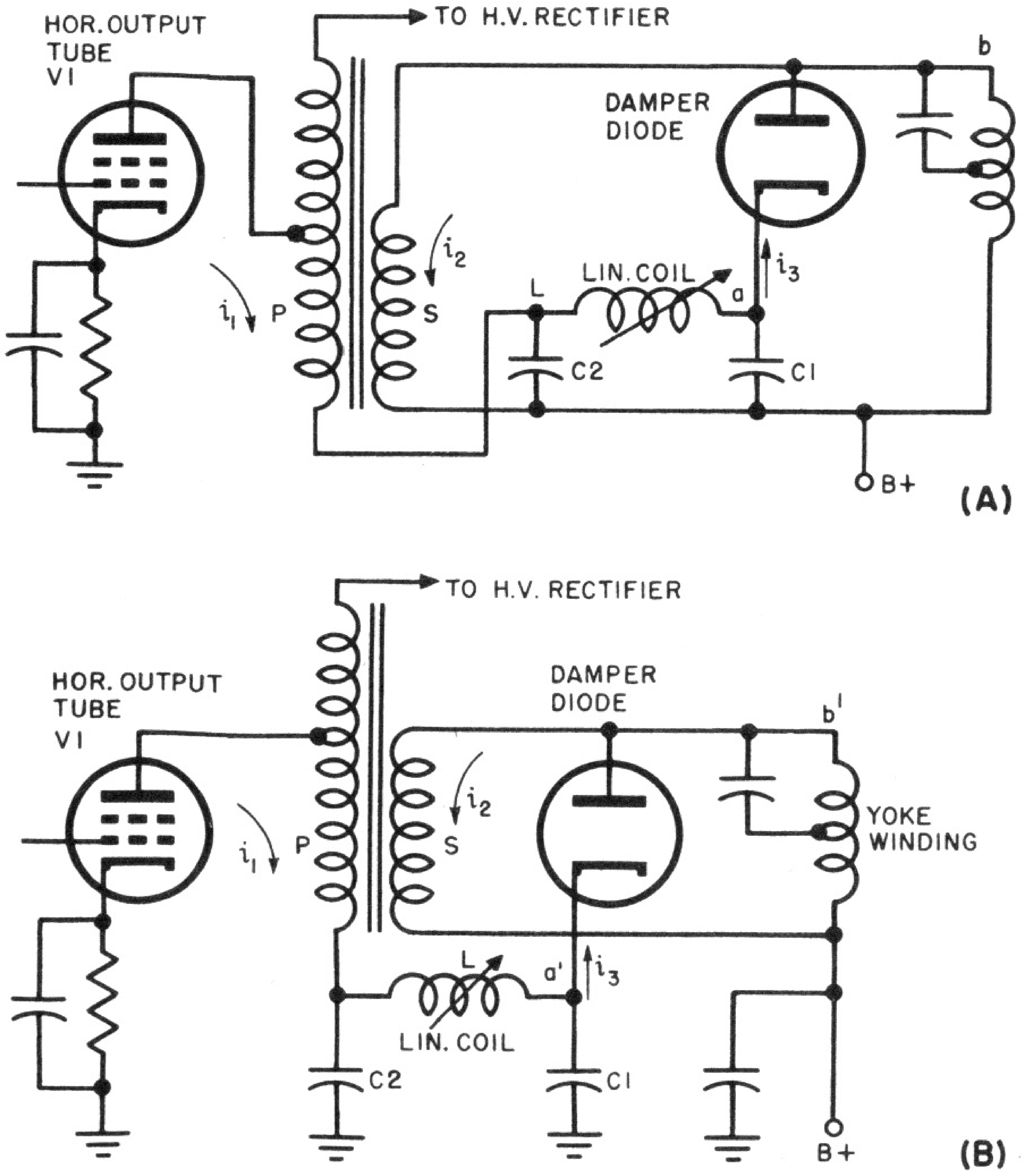

Fig. 4-8. Schematic diagrams showing how the damper diode and linearity circuit are added to the basic arrangement of Fig. 4-3. Two slight variations are included (A and B) because both are frequently used.

instances a comparison with Fig. 4-3 discloses the addition of the damper diode tube, the linearity coil, L, and its two associated capacitors, C1 and C2. The width coil and the high voltage rectifier still are omitted. The linearity circuit is shown as a pi network, although it must be understood that this is just one version of several arrangements. As will be shown, linearity circuits do not necessarily involve two fixed capacitors; frequently only one is used.

While on the subject of circuitry, attention is called to the fact that, while (A) and (B) of Fig. 4-8 appear different in schematic form, they are the same electrically. In Fig. 4-8 (A) the fact that the low ends of C1 and C2 connect directly to the B+ supply lead, whereas in Fig. 4-8 (B) C1 and C2 connect to ground, does not constitute a difference since we are dealing mainly with alternating currents, and the B+ supply lead is effectively at ground to a-c because the B+ terminal in the low-voltage power supply is bypassed to ground, through the power supply filter capacitor if nowhere else. Hence, (A) and (B) of Fig. 4-8 are operationally the same. The reason for showing these two versions of the same circuit is because they appear quite frequently in commercial television receivers, and it is desired that confusion be avoided.

It is to be noted that the linearity coil is in series with the primary circuit of the horizontal output tube V1; hence the output tube plate current flows through the coil. Also, the linearity coil is in series with the damper diode cathode system and hence it is common to both the output tube and the damper tube. It will be seen later that the linearity circuit displays an effect on the operation of both the horizontal output tube and on the damper diode. In the meantime it is sufficient simply to note the circuit features of the expanded schematics in (A) and (B) of Fig. 4-8.

The damper tube is seen connected across the yoke winding. Its plate joins one side of the horizontal deflection windings and the cathode is in effect joined to the other termination of the yoke winding through the capacitor C1. Inasmuch as we are dealing with a-c in these circuits, the capacitor is simply a capacitive element in the damper diode tube alternating or varying current path during conduction.

With Figs. 4-8 and 4-9 (A) and (B) as the references, we assume that the receiver is turned off, and then turned on a few moments before instants *a* in Fig. 4-9 (A) and (B). Under the circumstances, the capacitors C1 and C2 are in an uncharged state when the whole thing begins. The very first instant that conduction begins in the output tube, and plate electron current i_1 begins to flow in the output tube, it has the

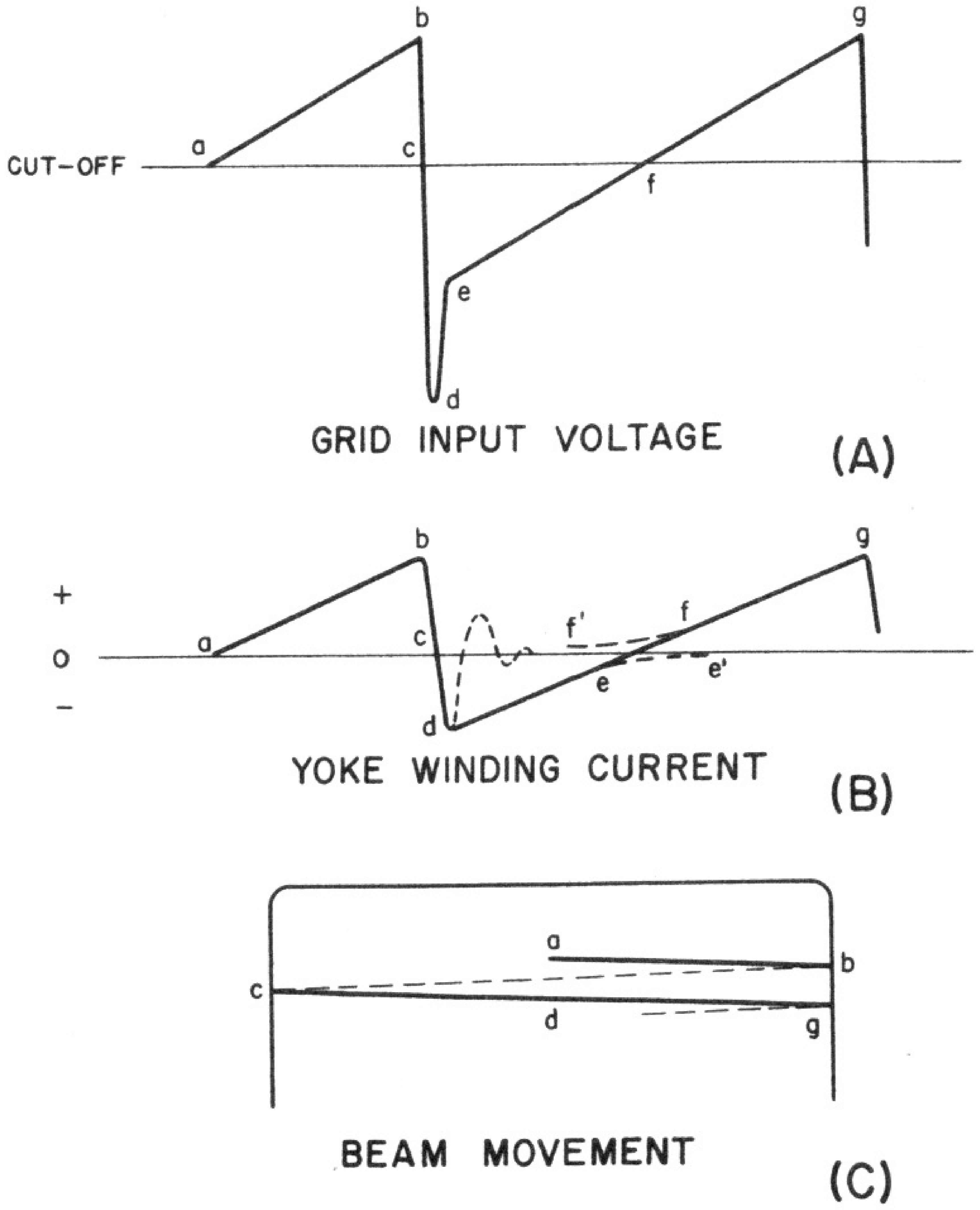

Fig. 4-9. Effect of damping on the sweep action. Part (B) shows how the oscillations of Fig. 4-4 (B) are removed and how the adjusted conduction characteristic f'-f of the output tube plate circuit equalizes the nonlinear portion e-e' of the damper diode.

direction shown in Fig. 4-8. It flows through the primary winding P; through the linearity coil L; through the damper tube (from cathode to plate); and simultaneously through the secondary winding S and the horizontal deflection windings into the B+ supply. At this instant the direction of current flow is such as to charge the capacitors C1 and C2 to make polarity of the top connections of these capacitors negative relative to the bottom connections. This is true because the voltage drop, due to the flow of i_1 through the damper tube resistance, is applied to these capacitors.

With conduction in the output tube and the plate current increasing in conformity with the sweep input voltage *a-b* in Fig. 4-9 (A), there would appear in the secondary circuit a gradually increasing sweep electron current which would have the direction shown by i_2 in Fig. 4-8.[a] This is a circulating forward-trace sweep current in the transformer

---

[a] Winding sense and connections of the transformer must be such that secondary trace current has this direction.

secondary S and horizontal deflection windings circuit. This is the current shown rising from *a* to *b* in Fig. 4-9 (B). By virtue of the direction of this current flow, the terminals *b* and *b'* on the yoke and transformer secondary windings are positive relative to the other ends of these windings. Therefore the plate of the damper tube is positive relative to its cathode and conduction takes place in the damper tube shown by the arrow labeled i_3.

During practically all of the trace portion of the cycle, the damper current i_3 is the same as i_1. However, during retrace, the counter-emf of the yoke also drives current through the damper. It is to be noted that the *source of voltage* responsible for i_3 in the latter case is different than the source of voltage responsible for the i_1 conduction current through the diode. The voltage source for i_3 is then the yoke circuit rather than the primary circuit, which is the source for i_1. This is an important distinction because the result is a charge of different polarity across capacitors C1 and C2. The i_3 charging current tends to make the top connections *a* and *a'* of these two capacitors *positive* relative to the bottom terminals. Neglecting for the moment the action which takes place when, for the first time, the output tube plate current has reached its maximum value and the tube is cut off, a relatively few cycles of conduction in the output tube finally charges the capacitors C1 and C2 to such a degree as to completely overcome the initial charge which made points *a* and *a'* negative relative to the B+ supply, and also made the cathode of the damper tube negative relative to its plate.

Now, the charge in the capacitor is positive at points *a* and *a'*, which makes this point positive relative to the B+ supply, and a voltage measurement between ground and points *a* and *a'* would show a higher B+ voltage than between ground and the B+ supply lead.

But another important condition also has developed. The first cycle of output tube plate current after the receiver was first turned on, and which caused forward trace sweep current in the horizontal deflection winding, was accompanied by conduction in the damper tube. In fact, several cycles of this forward-trace sweep current flow was accompanied by the damper conduction action, but to a lesser and lesser degree, because as the charge due to damper tube conduction was built up in C1 and C2, the cathode of the damper tube was becoming more and more positive relative to its plate. Eventually the magnitude of this voltage across C1 and C2 reached a value which was the equivalent of the voltage developed across the transformer secondary (S) winding (and horizontal deflection windings) during the flow of the forward-trace sweep current *a-b* shown in Fig. 4-9 (B), and conduction ceased in the damper tube because the cathode of that tube was made as positive as its plate.

The creation of this state in the damper tube- yoke winding circuit takes place very rapidly after the receiver is first turned on, and having been established, accounts for the generalized statement that the damper tube does not conduct during the interval when the output tube plate current is flowing, and the forward-trace sweep current responsible for moving the beam from the center of the tube screen to the right-hand edge is flowing in the horizontal deflection windings. The charge passed into the capacitors in this fashion acts effectively as a bias on the damper tube to prevent conduction during the time when the output tube is conducting. Having once been established this action continues during the interval *a-b* in Fig. 4-9 (B) while the receiver is in operation. So, from this point on, whenever we mention the period of conduction in the output tube, we shall take for granted that the damper diode tube is biased and conduction does not occur through it.

Let us assume that a few preliminary cycles of operation have been completed; the damper diode is biased and plate current cut-off then occurs in the output tube as described previously. This is point *b-c-d* in Fig. 4-9 (A). The first one-half cycle of transient oscillatory current *b-c-d* in the horizontal deflection windings rapidly moves the beam to the left-hand edge of the screen. This is *b-c-d* in Fig. 4-9 (B) and the beam is at *c* in Fig. 4-9 (C). Simultaneously, with the first small change in yoke current, a high negative voltage is developed across the yoke winding. Since this voltage makes the damper tube plate negative relative to its cathode, conduction does not take place.

Up to this point we have moved the beam from about the center of the tube screen to the right-hand edge, and back to the left-hand edge. At point *d* in Fig. 4-9 (B) the retrace sweep current is at its maximum negative value and a substantial amount of electromagnetic energy is stored in the horizontal deflection winding. The output tube still is in a plate current cut-off state.

The third quarter-cycle of transient oscillatory current begins to flow in the yoke. This is a positive-going current; that is, it decreases from its peak negative value towards zero and hence represents a change in direction of flow. The polarity of the electromagnetic field around the yoke winding likewise changes, and since the current falls at a very rapid rate (70 kc), a high momentary positive voltage is generated across the yoke winding; also the beam starts moving towards the center of the screen from its extreme left position *c* in Fig. 4-9 (C). The horizontal output tube is still in a plate current cut-off condition.

The positive polarity voltage generated across the yoke winding when the yoke current *starts* falling from its peak negative value makes the damper tube plate positive relative to its cathode, and this voltage is of such magnitude as to far exceed the bias set on the damper tube cathode by the charge in C1; hence the damper starts conducting very heavily and adding to the charge in C1. The damper diode in a conducting state is a very heavy *load* on the horizontal deflection winding, and for that matter, on the entire output system.

The third quarter-cycle transient current cannot therefore decay at the same rapid rate as when the circuit was unloaded and its *Q* was high. It is interesting to recall that the rate of change on the transient oscillator yoke current, which resulted in the retrace during the unloaded circuit condition, moved the beam across one-half of the tube screen in about 3.6 μsec. But with the damper tube load on the circuit, the fall or decay in transient current from the peak negative value occurs at a very much *slower* rate, as shown in Fig. 4-9 (B) by the solid line, as contrasted with the dotted line representation of the current decay without the damper tube load on the yoke. The slower rate of current decay is about 28 μsec to cover one-half the screen diameter.

Concurrent with the decrease in the rate of change in the yoke current, the positive voltage generated across the yoke winding (hence present across the damper tube plate-cathode circuit) also decreases. Inasmuch as it is this voltage which is responsible for the damper tube conduction, it stands to reason that the degree of conduction also decreases. Because of circuit conditions the over-all result is that the yoke current decrease from its peak negative value towards zero takes place in a fashion which is linear over most of the change, as shown by the curve *d-e* in Fig. 4-9 (B). Because of the order of this current change, the forward movement of the beam from its extreme left-hand position towards the center of the tube (which is the equivalent of the first half of the forward sweep) takes place at the same velocity as the second half of the forward sweep, or about 28 μsec to cover half the screen diameter.

A comparison of Figs. 4-4 (B) and 4-9 (B) and also Figs. 4-7 and 4-9 (C), discloses that the oscillatory form of sweep current and the oscillatory motion of the beam have been removed. The linear spot movement from *c* to *d* in Fig. 4-9 (C) is not completely realized with the yoke current change *d-e* in Fig. 4-9 (B), but the nonlinearity in yoke current change as it approaches zero is corrected by the linearity circuit.

It is important to note that the output tube plate current is cut off during most of the damper tube conduction period. Nevertheless the electron beam in the picture tube has been moved in a fairly linear fashion to just about the center of the tube screen. With a few details still remaining to be discussed, it is clear to see that (1) the output tube plate current accounts for the *second half* of the forward trace; (2) the transient oscillatory current, *without* any aid from the damper tube, accounts for the complete retrace; and (3) the transient oscillatory current, *with* the aid of the damper tube, accounts for the first half of the forward sweep trace.

Referring again to Fig. 4-9 (A), the output tube plate current can be considered cut off for the sweep voltage interval *b-c-d-e-f*. During this time interval, the sweep currents in the horizontal deflection windings are passing through the points *b-c-d-e* as shown in Fig. 4-9 (B). Finally, the sweep voltage input to the horizontal output tube again reaches the value when conduction begins. This is point *f* in Fig. 4-9 (A). It would be ideal if this instant of output tube conduction, or the instant when the output tube takes over the job of maintaining forward trace sweep current flow in the horizontal deflection winding, coincided with the moment when the first half of the forward trace sweep current (due to damper tube conduction) reached its zero value. It would also be ideal if the first half of the forward trace sweep current, *d-e* in Fig. 4-9 (B), were linear throughout.

Neither happens. Because the first half of the forward trace sweep current — *d-e* in Fig. 4-9 (B) — is not linear in its entirety, as seen by the relatively flat portion of the current waveform as it approaches point zero or point *e-e′*, it is necessary for the output tube plate current waveform to be distorted slightly from a completely linear sweep. This distortion occurs around the region just after it starts flowing, as shown by the flat portion *f-f′*, beginning at point *f* in Fig. 4-9 (B). Also it is necessary for the output tube to start its conduction period *before* the damper tube conduction action on the third-quarter transient current is reduced to zero. This implies that both horizontal output tube and the damper diode tube are conducting simultaneously for a small interval of time which corresponds to the beam approaching the center of the tube screen and for a short period after it has passed that point. It is over this region that linearization of the sweep currents is attained; hence the linearity circuit function is related more to the behavior of the beam when it is around the center of the tube screen than anywhere else.

By shaping the *beginning* of the forward-trace sweep current due to the output tube, and the end of the forward trace sweep current due to the damper diode, the final result is a linear *transition* from one sweep current to the other as shown by the portion of the yoke current line which joins the first half and second half of the forward-trace sweep current curves *e-f* in Fig. 4-9 (B). This is where the linearity circuit functions. While the two current curves seen to lack continuity it must be realized that their directions of flow through the horizontal deflection winding are the same; that the cross-over point is the momentary zero current point; and that a current stemming from one source can take over the duties of a current stemming from another source, provided that the timing and the values are correct.

The Boost Voltage Capacitor

The description of the damper diode tube operation included the flow of a varying charging current into the capacitor, C1 of Fig. 4-8 (A) and (B), which completed the path of the damper diode across the horizontal deflection coil of the yoke. This same capacitor was described as being in series with the B+ supply circuit so that the voltage built up across it as the result of the damper diode conduction current, was additive to the B+ supply voltage relative to the operating plate (and screen) voltage for the horizontal output tube.

In essence the shape of the damper diode conduction current was shown as being the equivalent of the first half of the forward trace sweep current, or curve *d-e-e′* in Fig. 4-9 (B). What we did not state, although it should have been self-evident in view of the repeated scanning of the screen in the horizontal direction, was that it was repeated once during each horizontal scanning cycle, or at the rate of 15,750 times per second, equal to the horizontal sweep frequency. Another detail which was not shown was that the damper diode conduction current reached zero shortly after the horizontal output tube took over the job of maintaining the forward-trace sweep current, and remained at zero until the retrace was completed, and the damper diode again was made conductive and another period of charging C1 started.

A few cycles of the damper tube conduction, and hence C1 charging current action, are shown in Fig. 4-10 (A). These are the solid line curves below the zero-sweep-current reference axis. Somewhere between the beginning and the end of the conduction in the horizontal output tube, the damper diode conduction current reaches zero; then, after completion of the retrace, the heavy surge of conduction current flows into C1. Being repeated one for each horizontal scanning line, there develops

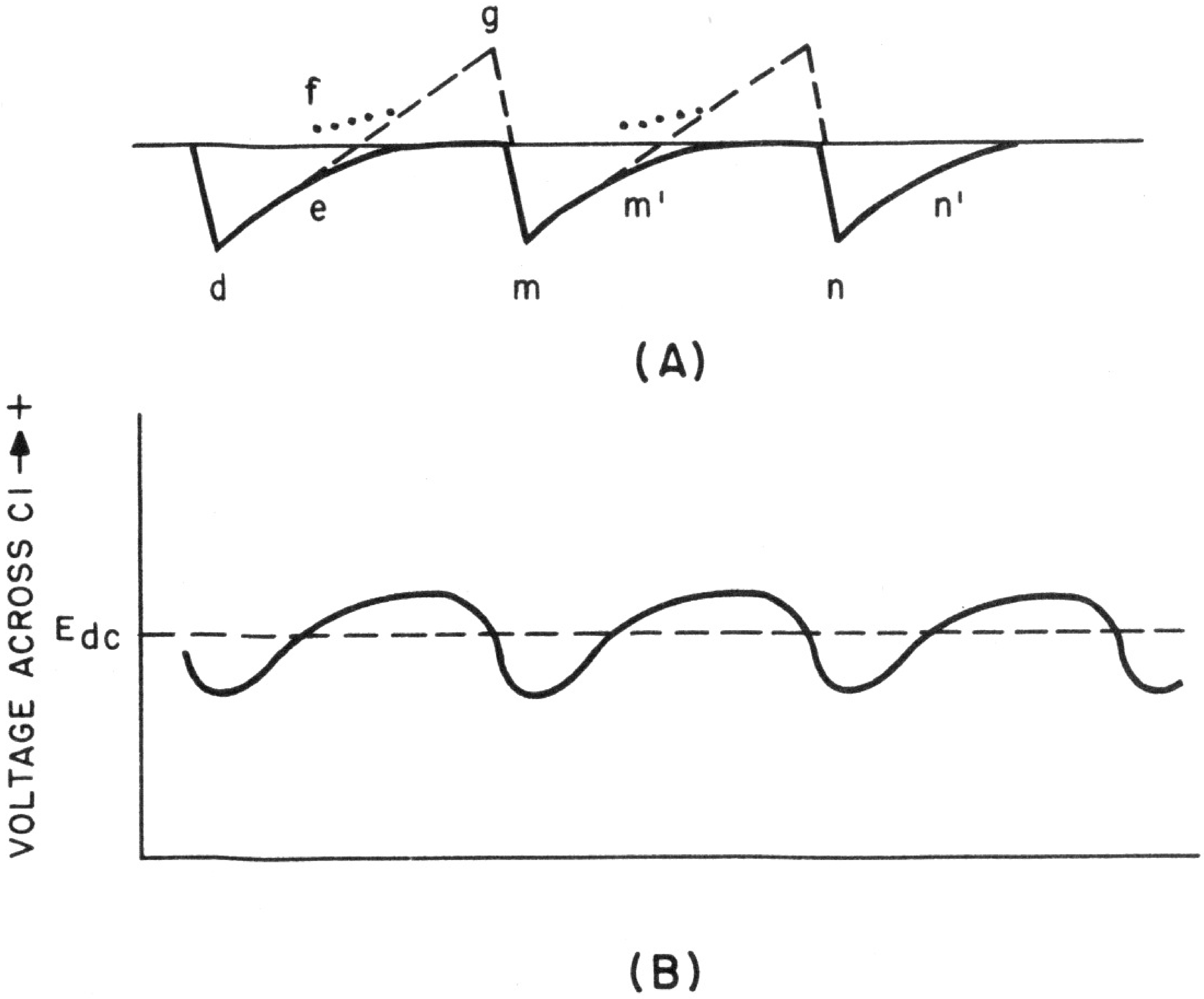

Fig. 4-10. (A) Waveform of conduction current in damper diode. This is also the charging current in capacitor C1. (B) Pulsating voltage across capacitor C1, showing the d-c component which adds to the plate voltage of the output tube.

across C1 a pulsating voltage which can be represented as shown in Fig. 4-10 (B), and which has a frequency corresponding to the frequency of the damper conduction intervals, or 15,750 cps.

Being a pulsating voltage, its average value is the equivalent of a d-c voltage. It is this voltage which was described as having a polarity which makes it additive to the B+ supply voltage for application to the horizontal output tube. Now if we recognize the fundamental origin of this voltage (namely, the C1 charging current due to damper diode conduction, which action in turn was caused by the decline in the electromagnetic energy stored in the horizontal deflection coil at the end of the retrace period) it is evident that this field energy has been converted into a d-c voltage which, when applied in series with the B+ supply, increases the output tube plate voltage, (hence the plate current of that tube) without calling on the B+ supply to deliver additional energy. We have recovered some of the field energy by the use of a diode tube damper instead of a fixed resistor type of damper, and so improved the electrical efficiency of the system as a whole.

Another way of looking at this entire action, especially the utility of C1, is that we have *boosted* the horizontal output tube plate voltage above that available from the B+ supply by an amount equal to the average value of the pulsating voltage developed across C1 by the damper diode conduction current. This *boost* voltage can amount to from perhaps as low as 50 volts d-c to perhaps as high as the original B+ supply output voltage. It all depends on the design of the system. In view of its use, the capacitor, which is subject to a charge by the damper tube conduction current, is generally referred to as the *boost* capacitor.

It is evident from the foregoing that, in any TV receiver which makes use of a booster capacitor, the B+-to-ground supply voltage will always be lower than the d-c voltage between ground and the primary of the horizontal output transformer; or between ground and the plate of the horizontal output tube; or between ground and the cathode of the damper. The use of the booster capacitor as a capacitive type of d-c voltage source is illustrated in Fig. 4-11, where it is symbolized as a battery in series with the B+ supply system serving the horizontal output tube.

We might mention in passing, although it receives attention later, that all TV receivers do not use a booster capacitor. However when one is used, any condition which defeats its regular utility will adversely affect the performance of the entire horizontal output system, including the trace width and linearity.

The Pulsating Voltage Across The Booster Capacitor. The representation of the pulsating voltage, which can be observed across the booster capacitor with an oscilloscope as shown in Fig. 4-10 (B), is more of an ideal case than an actual one. In general the shape of this voltage is that of a parabola, but the smoothness of the curve shown will not always be realized in practice. Frequently oscillations may be found along the outline, and as frequently, the curve will be more peaked than is shown here. Finally the shape of this voltage will be found influenced by the setting of the linearity control.

Referring to (A) and (B) of Fig. 4-10, it would seem that, having once been charged by the damper conduction currents, the booster capacitor would hold its charge and the voltage across it would remain constant. Were this true, it would seem that the damper diode would conduct but once and then become useless for damping the transient oscillations present in the output system. Obviously this cannot happen. It does not occur because the booster capacitor is partially discharged during the time that the output tube is conducting through the cathode-plate screen resistance of that tube.

Another very interesting and important condition relating to the booster capacitor is that its location in the circuit ties it to the plate circuit of the horizontal output tube. Anything that may happen in the plate circuit of the output tube, and which may have an effect on the currents flowing into this capacitor, will demonstrate an effect on the behavior of the damper tube during its conducting period. In this connection it should be recalled that, after the first few cycles of operation, an average value of d-c voltage extant in this capacitor is the bias acting on the damper tube and preventing it from conducting throughout the period when the output tube is conducting. The voltage across the horizontal deflection winding is positive at the damper tube plate connection, but not sufficiently so to overcome the positive bias at the cathode of the damper tube.

However, if something can be done that will modify the instantaneous voltage across C1 at the moment when the output tube starts conducting, it is conceivable that the operation of the output tube will be affected. What we are referring to is shown in Fig. 4-9 (B) and in Fig. 4-10 (A). In both these illustrations there is a short interval when the damper tube is conducting simultaneously with conduction in the output

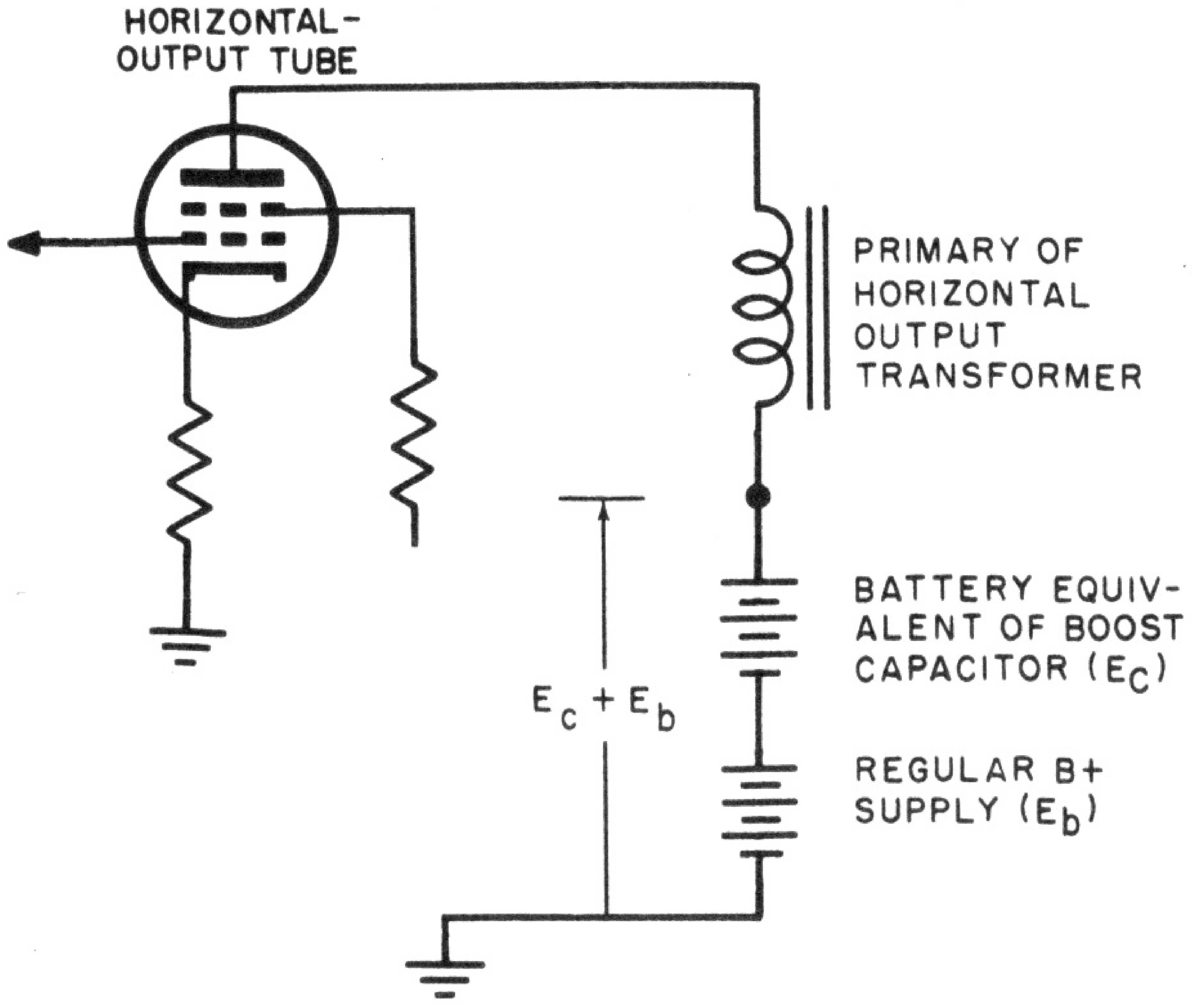

Fig. 4-11. How the voltage across the booster capacitor C1 fits into the circuit to boost the plate voltage of the output tube.

tube. This is labeled *e-e′* and *f-f′* in Fig. 4-9 (B) and also appears in Fig. 4-10 (A) without these labels. What we are after is the creation of the nonlinear region *f-f′* in the output tube plate current to offset the nonlinear region *e-e′* in the damper tube conduction current curve. This is done by the linearity circuit which influences the shape of the pulsating voltage developed across the booster capacitor.

The Linearity Circuit

The linearity circuit shown in Fig. 4-8 (A) and (B) is repeated in Fig. 4-12 as a matter of convenience to the reader. It consists of the variable inductance and the two capacitors C1 and C2. This circuit is not an example of the very first type of linearity circuit used in the early TV receivers, but it is representative of a very popular basic system used in very many receivers, even today. Variations of it appear later when the modifications of the basic horizontal output system being discussed are examined. In many of these circuits, only one capacitor is associated with the linearity circuit; the booster capacitor is entirely separate.

Essentially, the linearity circuit is a resonant system, resonant to about 15,750 cps. The capacitor (s) associated with the linearity circuit are fixed, but the inductance is variable so as to accommodate the system to the resonant needs of the circuit under different operating conditions.

Reference to Fig. 4-9 (B) shows the two portions of the horizontal sweep current. The function of the linearity circuit is to deform the output tube plate current curve in the region *f-f′* so that it is equal and opposite in curvature to the nonlinear portion *e-e′* of the damper-tube controlled sweep current. When this is done, the cumulative effect is substantially a linearly changing, forward-trace, sweep current (shown by the solid line joining the aforementioned two sweep current curves).

To accomplish this it is necessary to start the conduction in the output tube at a particular time – coincidentally with a particular moment during the conducting cycle in the damper tube. Obviously two events must happen together – the instant of the start of conduction in the output tube, and the decay in the damper tube conduction current. The former might be accomplished by changing the operating voltage conditions in the control grid circuit of the output tube, or by changing the amplitude and shape of the sweep voltage input to the output tube. Or the instantaneous plate voltage applied to the output tube might be increased relative to the input sweep voltage in some manner so as to start conduction in that tube at a particular instant. Going still further, it might be possible to so change this plate voltage, instant by instant, that the desired curvature is created in the output tube plate current over a certain region. The method used is the latter — changing conditions in the plate circuit.

The second requirement, namely, control of the conducting period in the damper-diode tube, is satisfied by causing the voltage that is built up across the booster capacitor C1 to be due not only to damper diode conduction current, but also to the resonance current in the linearity circuit. This current stems from the output-tube plate current flowing into the linearity circuit, which is made resonant to the output tube plate-current frequency by adjustment of the linearity coil inductance.

The two current sources feeding the booster capacity do not necessarily act to aid each other instant by instant; in fact, they may tend to buck each other. Between these two extremes we can encounter various conditions. At any instant the two currents result in the development of a voltage across the capacitor C1, which has an effect on the conduction in the diode itself, and on the instantaneous plate voltage effective on the horizontal output tube plate. Thus it is responsible for the instant of output tube conduction, as well as for the shape of the output-tube plate current.

By adjusting the linearity coil inductance, various conditions of resonance can be created. These conditions result in a controllable phase relationship between the resonant current entering C1 relative to the current, due to the damper diode. The voltage built up across this capacitor, which affects the instantaneous horizontal output-tube plate voltage and the instantaneous bias acting on the damper diode, is thus seen to be determined by the instantaneous phase relationship of the two currents. At correct conditions of adjustment, the instantaneous phase of the two currents entering C1 is such that the resultant momentary voltage across C1 causes the horizontal output tube to start conducting at instant *f′*, shown in Fig. 4-9 (B), which corresponds to instant *e* in the damper diode conduction curve. In addition, the instantaneous plate voltage on the output tube is so modified that the plate current rise has that curvature over the period *f-f′* which is equal and opposite to the portion *e-e′* in the damper diode conduction curve. It is to be noted that the curvature *f-f′* in the output plate current exists while the positive-going sawtooth input sweep voltage is rising linearly.

In terms of results, the linearity circuit is a *transition* network. It links and simultaneously affects the performance of the horizontal output-tube plate circuit and the damper diode circuit. It shapes the output-tube plate current around the region of the start of conduction in that tube,

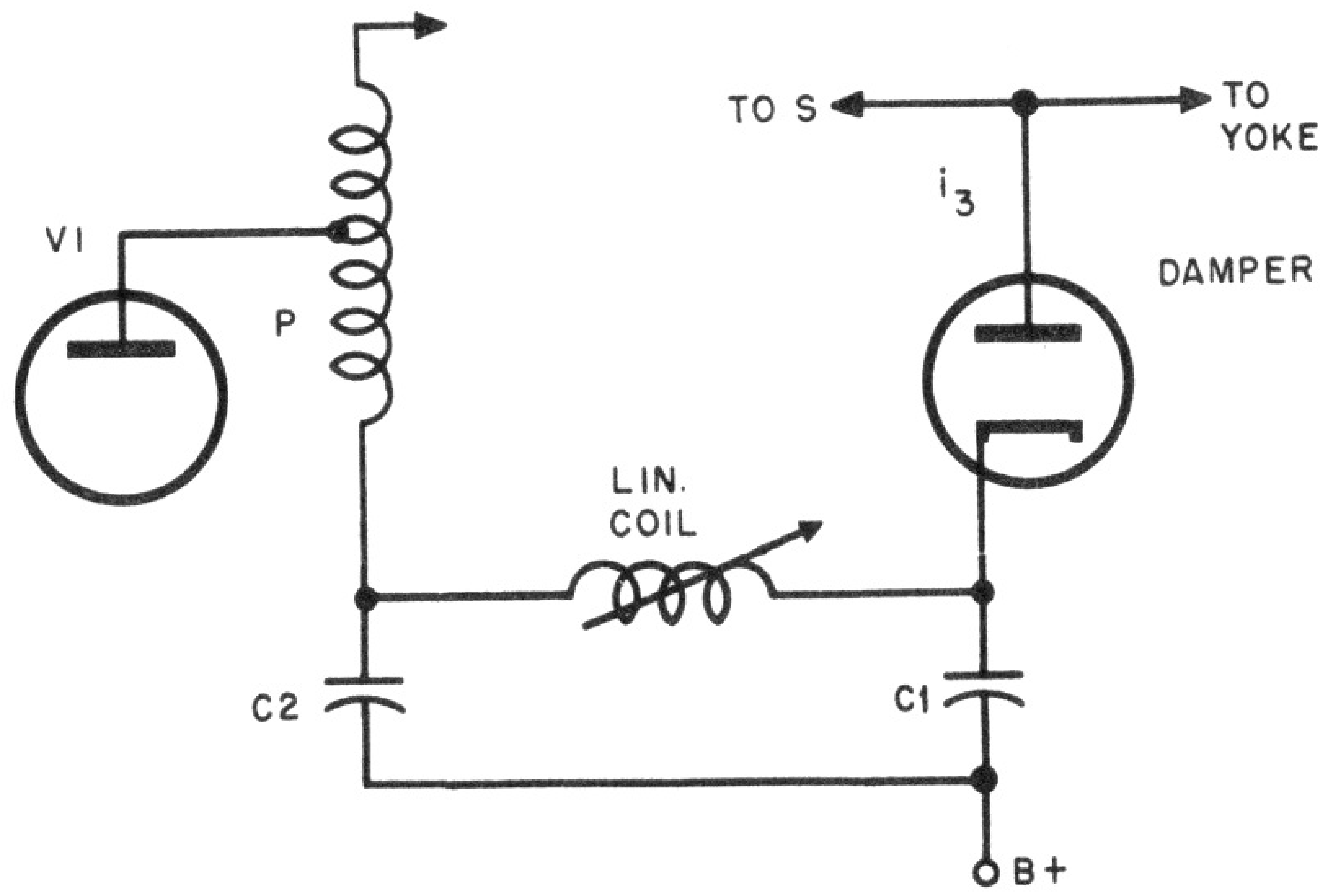

Fig. 4-12. Linearity circuit portion of the diagram of Fig. 4-7 (A).

and contributes to the shaping of the damper diode conduction current around the region of fall of that current to zero. In other words, it controls the rise from zero of one current and the fall to zero of the other – thus permitting one tube to take over a duty from the other. The result is the continuation of the forward-trace horizontal sweep current in the horizontal deflection winding as a linearly rising sawtooth curent.

Incorrect adjustment of the linearity circuit causes the start of plate current flow in the horizontal output tube to begin too soon, or too late – with respect to the approach of damper diode conduction current to zero. In either case the result is nonlinearity in the horizontal deflection sawtooth sweep current around the middle of the forward trace, as shown in Fig. 4-13.

Before concluding the discussion of the basic linearity circuit shown in Fig. 4-12, it might be well to comment that the capacitor C2 plays a part in the action because it is a part of the linearity circuit. Attention has, however, been focused on C1 (which in this case is the boost capacitor) because of its electrical location and its mutual function. In subsequent examples of linearity circuits the resonating capacitor for the linearity coil and the boost capacitor may be remote from each other in the circuit, but in every case it will be found that the linearity circuit is common to both the horizontal output tube and the damper diode, and that the behavior of the linearity circuit will be found to influence the current flowing into the boost capacitor, no matter where the latter may be located in the horizontal output system.

The Width Coil

Adding the width coil to the basic horizontal output system is a relatively simple matter. It is shown in Fig. 4-14 as the variable inductance so marked. It is connected across a tap on the secondary winding S, which feeds the voltage to the horizontal deflection coil. Inasmuch as the basic action of the width coil has been discussed in Chapter 2, it need not be repeated here. Variations in location of the width coil, relative to parts of the complete secondary across which it may be connected, are treated later.

The High-Voltage Rectifier

The high-voltage rectifier is a part of the basic horizontal output system. While it is true that the horizontal sweep voltage is developed without any contribution by the high-voltage rectifier system, the two are treated together because of their physical location. However it is necessary to mention a few rarely encountered high-voltage rectifier arrangements have no association with the horizontal sweep current system. These are discussed later as individual entities.

The addition of the high-voltage rectifier and filter to the basic horizontal output system is shown in Fig. 4-14. With the width coil, this makes the output system complete. The single-turn coil, F, supplies the

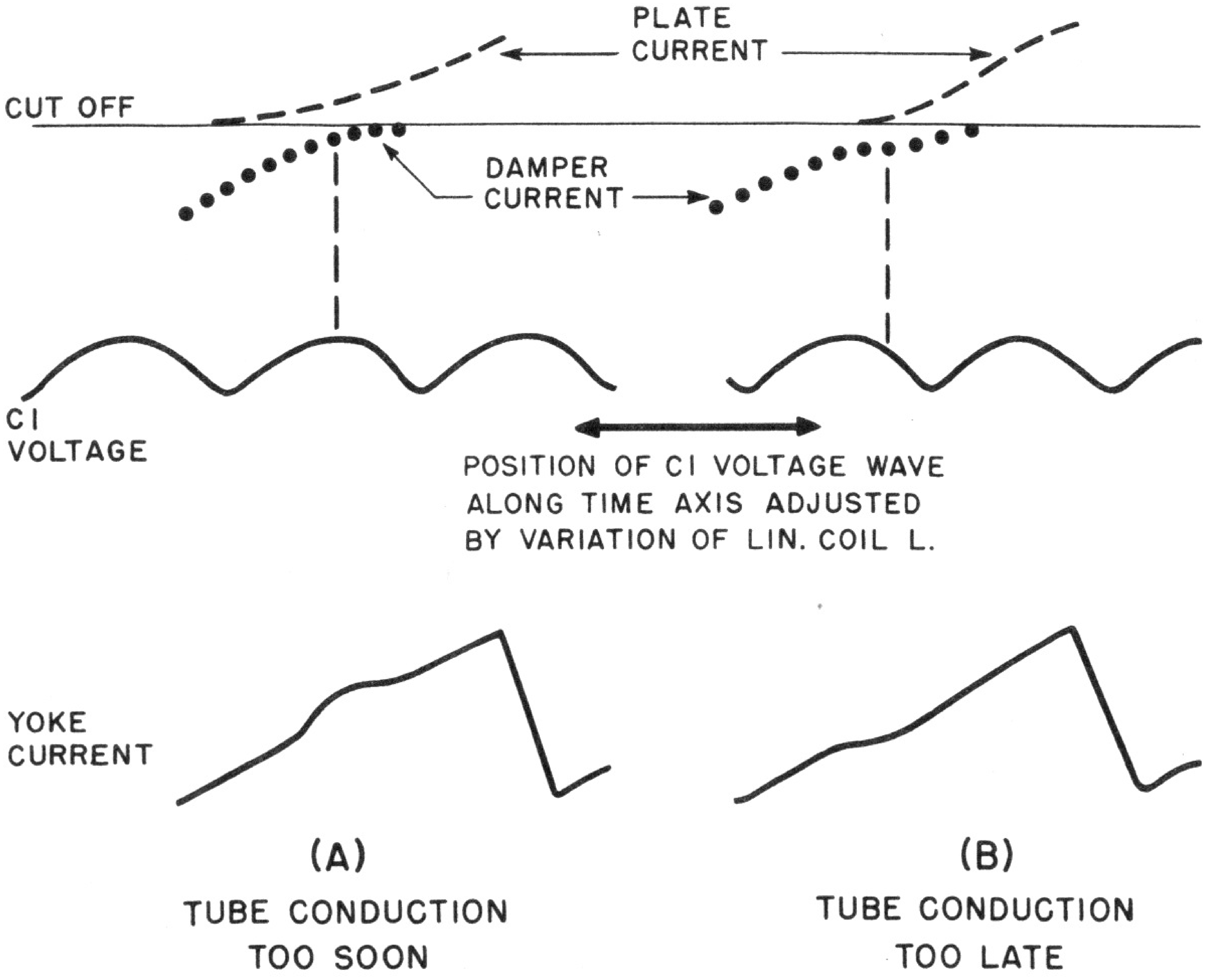

Fig. 4-13. How adjustment of the linearity coil affects plate current, damper current, and yoke current waveform.

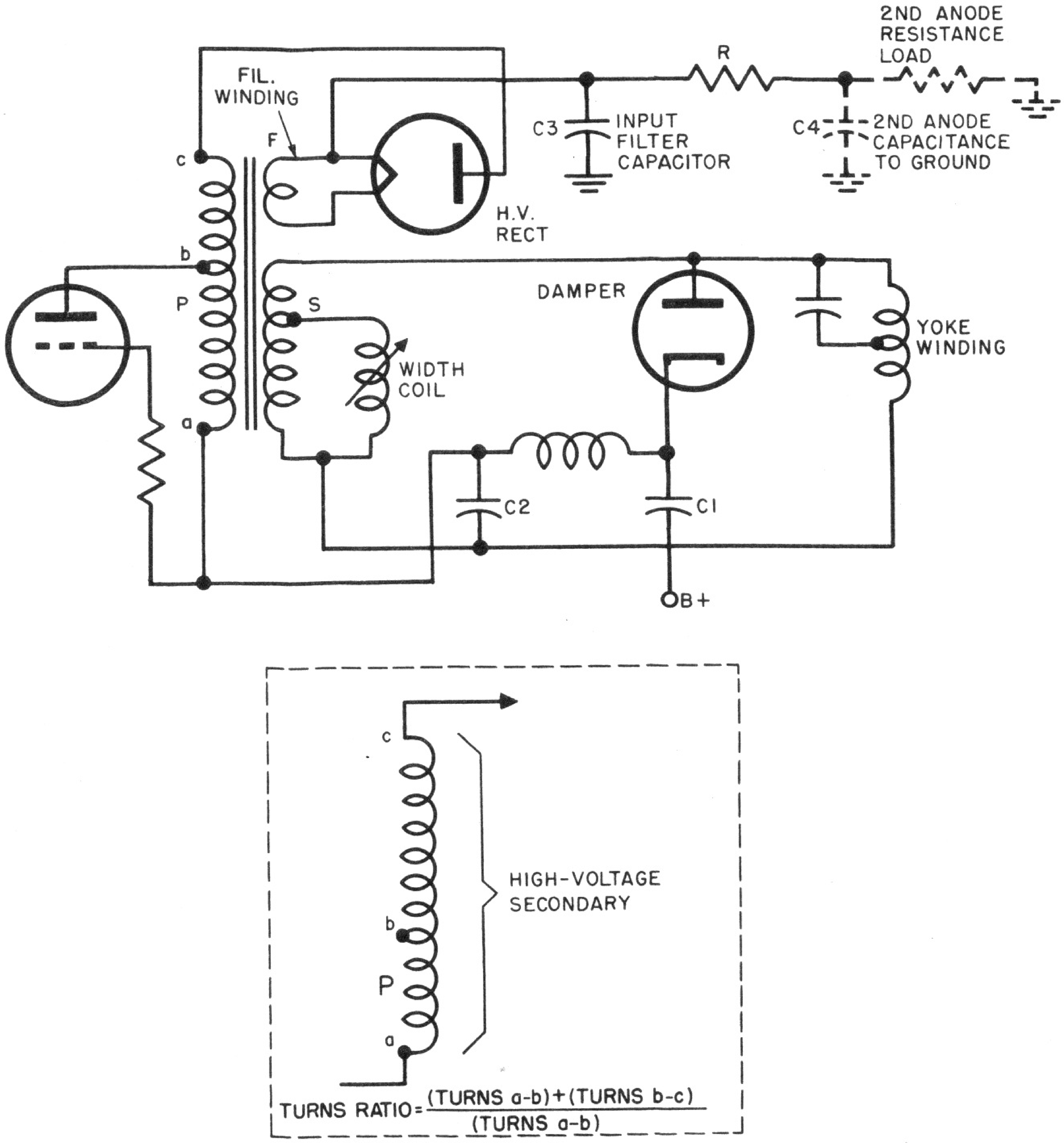

Fig. 4-14. Addition of the high voltage supply to the output circuit previously discussed, and representation of the step-up auto-transformer action of the high voltage winding.

filament voltage for the high-voltage rectifier tube. It derives the filament voltage by inductive coupling to the primary P. Under the circumstances the high-voltage rectifier tube filament voltage is of pulse character, rather than of sine-wave form as in the usual a-c type of power supply.

The high a-c voltage required for rectification by the high-voltage rectifier is secured from the high-voltage secondary winding *a-c*. The primary winding P and the added section *b-c* comprise an autotransformer arrangement. The number of turns in *b-c* is several times as many as in the primary winding P, thus attaining a voltage step-up. In an autotransformer system the primary winding (P in this case) is common to both the primary and secondary circuits. The step-up in voltage attained in this fashion approximates from a low of about 2.5:1 to as high as perhaps 4:1, in different designs.

The a-c voltage, which is fed to the high-voltage rectifier anode stems from the horizontal deflection coil. We have described the generation of a high inductive voltage kick across this winding at the moment before retrace. The polarity of this pulse has been described as being negative and it is symbolized at (A) in Fig. 4-15.

In the basic horizontal output system, the inductive coupling between the secondary winding, S, and the primary winding, P, results in a voltage step-up when looking towards the primary P, because the normal action of the transformer is to afford an impedance step-down

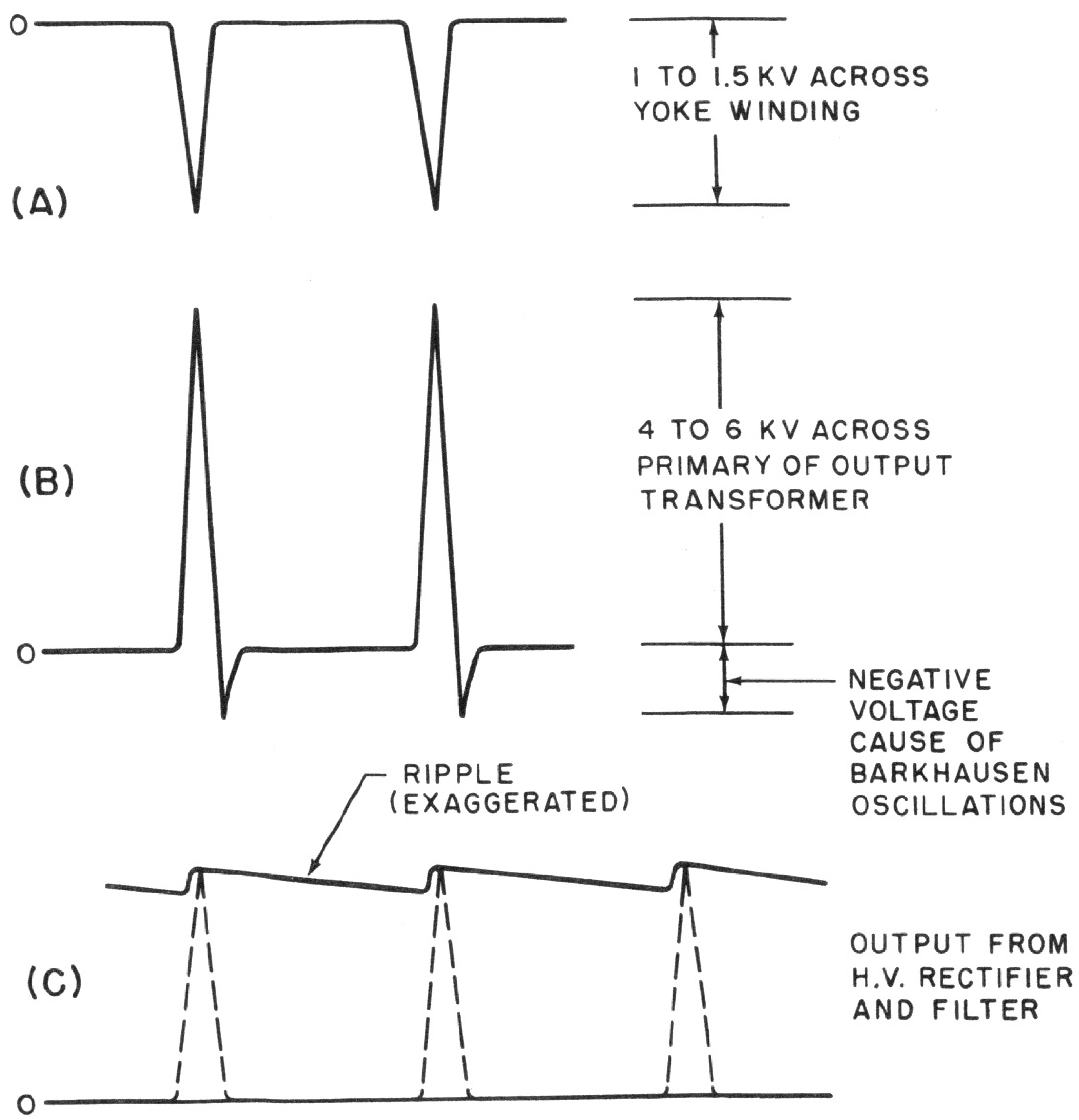

Fig. 4-15. Voltage waveforms relating to the high voltage power supply portion of the output system. (A) Yoke voltage, (B) transformer primary voltage, (C) high-voltage supply output.

(hence a voltage step-down) when looking from P towards S. So, when looking from S towards P, the voltage step-up is of the same magnitude as the voltage step-down when looking in the opposite direction.

With the secondary winding S being connected across the horizontal deflection coil, the inductive kick generated across the latter, when the horizontal output tube is cut off, is applied across S and reappears across P as a stepped-up voltage; it is also a voltage that has been inverted in polarity. This is the voltage shown as part (B) in Fig. 4-15, and has a magnitude of from perhaps 4 kv to as high as 6 kv, with the main pulse being positive relative to ground.

Examination of the voltage pulse in Fig. 4-15 (B) shows that a portion (*a*) is positive relative to ground, and that a much smaller peak is below the imaginary zero axis, or is negative to ground. This momentary negative voltage *S* has a magnitude of from perhaps 800 volts to 1000 volts. This is interesting because it makes the plate of the horizontal output tube momentarily *negative* relative to the screen of that tube. The main pulse makes the plate of the output tube positive relative to ground, by whatever is its magnitude.

Making the plate of the output tube negative relative to its screen causes a flow of electrons from plate to screen, and this is the origin of oscillations known as Barkenhausen oscillations, which appear on the picture tube screen as vertical bars at the left side of the picture. The negative swing in voltage at the output tube plate is the result of resonance involving the leakage inductance of the horizontal output transformer.

Assuming the presence of the high-voltage pulse across the primary winding P, the resultant current flowing in this winding induces a voltage in the high-voltage secondary (which also includes the primary P), which is higher than the primary voltage by the ratio between the total number of turns in the primary and secondary windings and the turns in the primary winding only. This is indicated in the dash-line box of Fig. 4-14.

The stepped-up voltage then is fed to the high-voltage rectifier where it is rectified. The rectified pulses of current are fed to an RC filter, which in this case consists of the input capacitor C3 and the filter resistor R. This type of filter is satisfactory because of the relatively high frequency of the a-c voltage (15,750 cps) and because of the low-load current requirements.

All the required filtering is not achieved with C3 and R; additional filtering is obtained from the capacitance which exists between the second anode of the picture tube and ground. This is shown by the dash-line symbol C4. The dash-line resistor symbol paralleling C4 is the resistive load presented by the picture tube second anode circuit when the tube is operating.

All in all, the action of the high-voltage rectifier is simple, but several interesting comments can be made nevertheless. For instance, the magnitude of the high voltage fed to the high-voltage rectified plate is a function of the behavior of the horizontal output transformer, and also of the components which are connected between the yoke winding on that transformer and the deflection winding on the yoke, as well as the yoke windings themselves. Anything tending to interfere with the proper functioning of these components, and which leads to the reduction of the inductive kick voltage across the yoke at the time when the output tube plate current is cut off, will adversely affect the generation of the high voltage required for the high-voltage rectifier tube. Therefore it will adversely affect the operation of the picture tube because the second anode voltage will be low. This may appear on the screen as insufficient brilliance, and since the magnitude of the second anode voltage determines the "hardness" of the beam, *reduced* second anode voltage allows easier deflection; hence greater picture dimensions may result. But, since the operation of the electron gun in the picture tube is related to the second anode voltage, reductions in the latter also will affect focus.

Summary of Basic Horizontal Output System

The details given about the action of the components in the basic horizontal output system have been elaborate. This was deliberate in order to obviate similar discussions when the variations in circuit arrangements are treated. In view of what will follow, attention is called to certain details which have already been described but which warrant emphasis.

The basic horizontal output transformer discussed uses individual windings for the primary and yoke secondaries; these are inductively coupled. As a result of this, a voltage polarity reversal takes place in the transformer while delivering the deflecting voltage to the yoke, and when the "kick" from the yoke just prior to retrace is fed to the primary of the output transformer. Also because of this polarity situation, the damper diode is connected in such manner across the yoke secondary winding on the output transformer and across the horizontal deflection winding on the yoke, that its plate is somewhat to the high side of these windings.

The basic horizontal output transformer makes use of individual windings, inductively coupled – as the primary and as the yoke voltage feed windings. The latter is winding S. The horizontal deflection winding on the yoke is connected across the entire secondary winding, the width coil across part of it.

The relative polarities of the primary and secondary windings of the horizontal output transformer have been assumed in this chapter in harmony with the method of drawing the transformer and damper tube symbols on commonly used schematic diagrams. This arrangement is illustrated by Fig. 4-8, and others. If such a diagram is analyzed, it will be noted that, for the indicated current polarities and damper tube connection, the *winding sense* of the secondary must be opposite to that of the primary. If the winding sense is the same, the connections of either the primary or secondary winding must be reversed. Since adjusting either the winding sense or the connections offers no difficulty, and the proper connections on a transformer are usually plainly indicated by label or location, this is of no technical interest. However, it does emphasize the fact that *polarity of connections must be proper* when a transformer is replaced, or the circuit will not work as it should.

All the above conditions and actions are subject to change in modifications of the basic horizontal output system.

The basic function of the yoke has been described and the design and differences in performance of different types have been fully discussed in the chapter devoted to this component.

CHAPTER 5

VARIATIONS IN HORIZONTAL AND VERTICAL SWEEP OUTPUT SYSTEMS

The basic horizontal sweep output circuit discussed in Chapter 4 is but one example of horizontal output systems. There are many other variations. These variations are often most apparent because of the differing design of the horizontal output transformer, which in turns leads to changes in the entire output system circuit.

Variations in the high-voltage rectifier system also exist. Among these are voltage doubling and tripling rectifying circuits; r-f oscillators, which furnish a high voltage signal for rectification; and finally, the so-called *pulsed r-f supply,* wherein a control pulse activates an oscillator into momentary operation, the output of which is rectified for use as the high d-c voltage for the second anode of the picture tube.

Variations in Horizontal Output Transformers

Three major varieties of horizontal output transformers give rise to names that identify the output system as a whole. These are:

a. The transformer coupled system.
b. The auto transformer coupled system.
c. The direct drive system.

The actions that result in the sweep voltage fed to the horizontal deflection coil are substantially the same in all, yet the different labels are assigned to the circuits because of their differences of electrical organization.

Horizontal Output Transformer Types

Transformer Coupled

The transformer coupled system is the basic system described in Chapter 4. The name "transformer coupled" is an arbitrary selection and is intended to identify one of three methods of coupling the horizontal output tube to the horizontal deflection winding on the yoke. *Transformer coupled* simply means that the *secondary winding which feeds sweep voltage to the horizontal deflection coil is separate and apart from the primary winding* of the transformer; that the two windings are *not conductively* joined to one another. This is evident in all the output circuit schematics shown in Chapter 4, and in the basic horizontal output system schematic repeated for convenience in Fig. 5-1.

The Autotransformer System

In the autotransformer type of horizontal output transformer, the primary winding carries both primary and secondary currents, hence creating the effect of much tighter coupling between these circuits. An example is shown in Fig. 5-2. Compare this schematic with the one in Fig. 5-1.

Referring to Fig. 5-2, the high-voltage rectifier system is conventional. As to the remainder of the output transformer, the windings between terminals 1 and 7 are, in effect, a single winding with taps. As shown by the dash arrows, the primary circuit P is between taps 1 and 5. The path to ground for a-c signals in the plate circuit of the output tube is the effective distributed capacitance to ground shown by a dotted line symbol between tap 7 and ground. All the windings between taps 2 and 7 form a secondary, indicated by the dash arrows and the label S. With this secondary containing *fewer* turns than the primary, the voltage between taps 2 and 7 is less than that between 1 and 5; hence a voltage *step-down* (as well as impedance step-down) and a current *step-up* prevails all along the winding below tap 2. Since the turns between taps 2 and 4 are

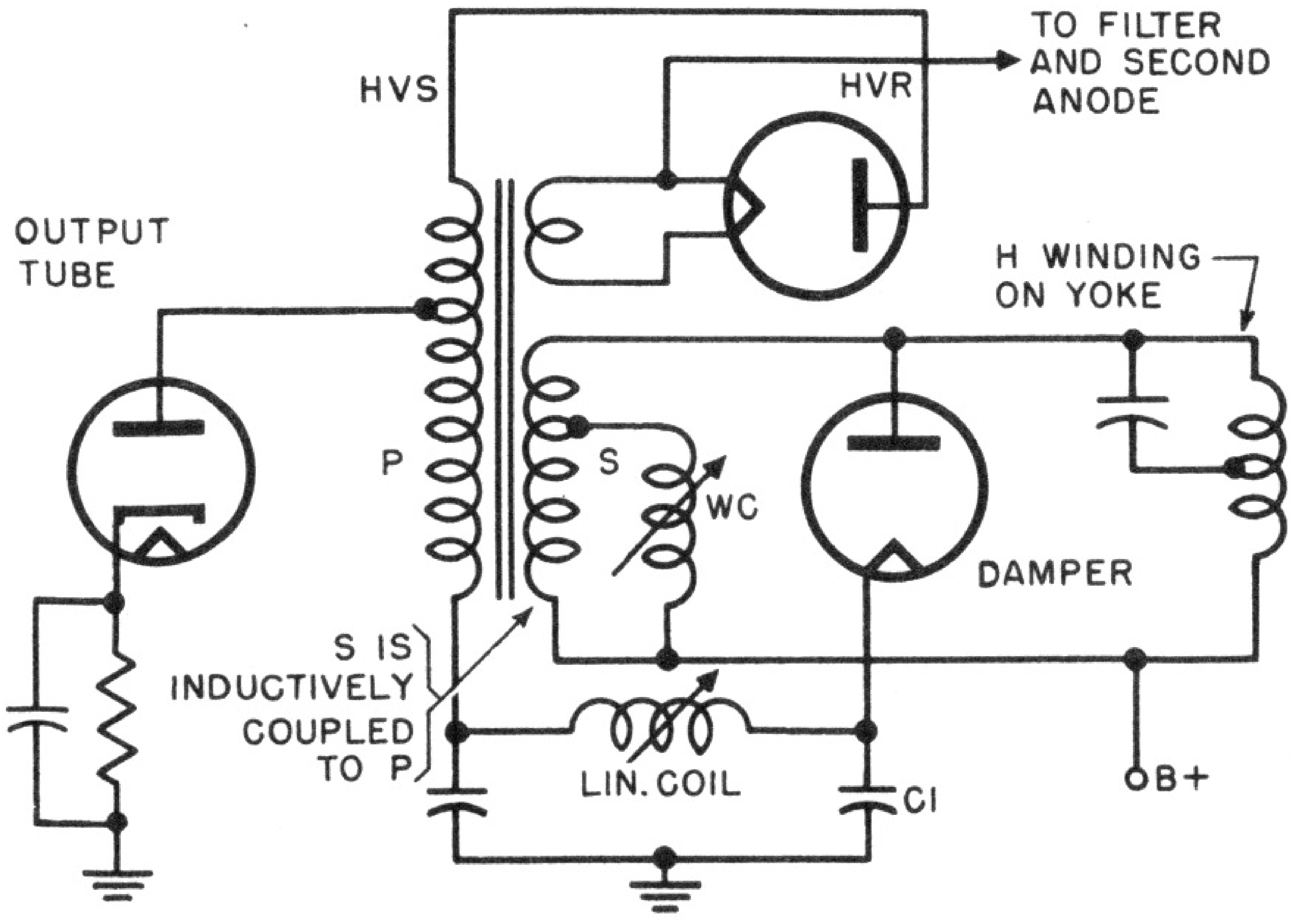

Fig. 5-1. Basic multi-winding transformer output circuit discussed in Chapter 4.

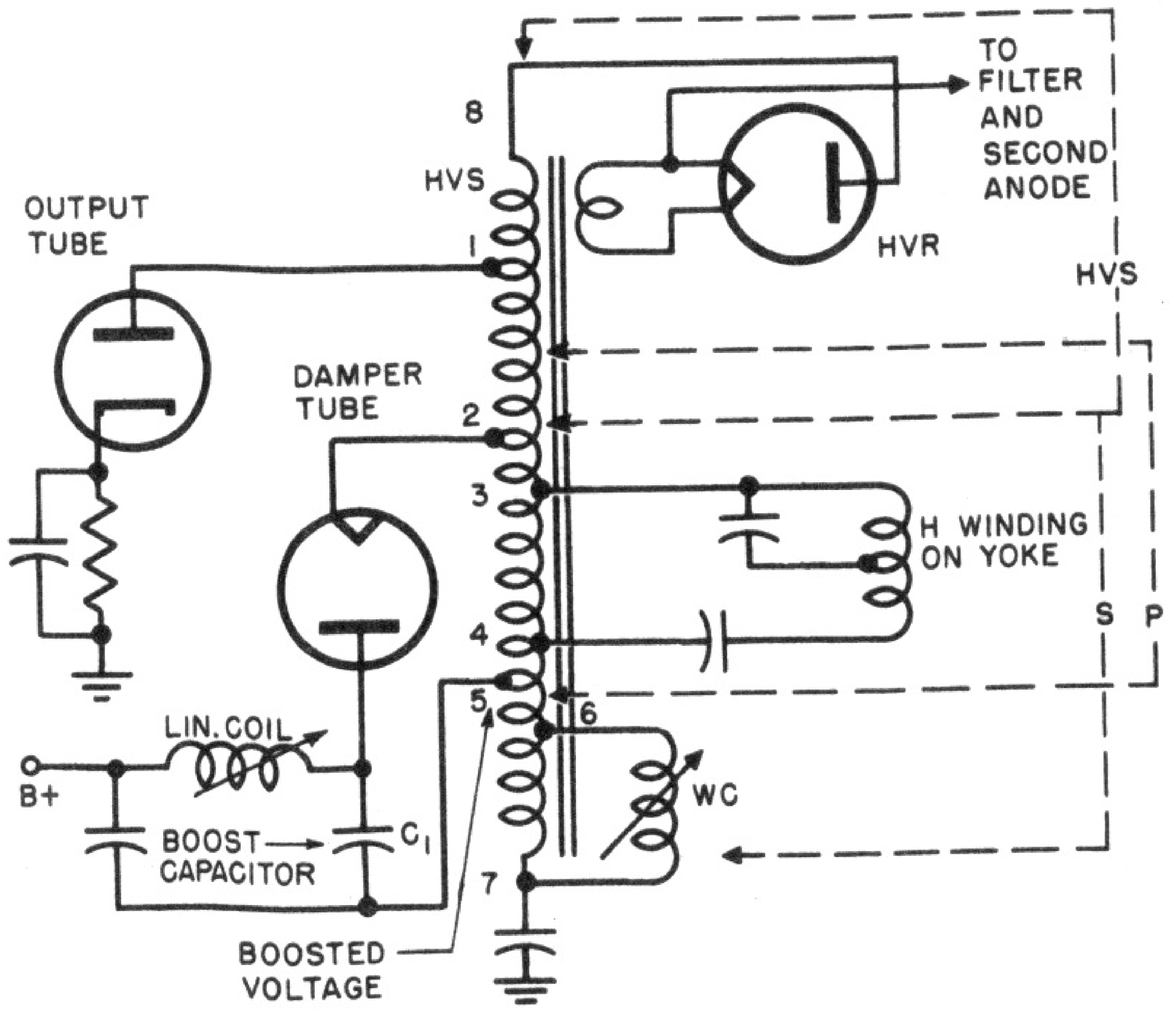

Fig. 5-2. Horizontal output system employing an autotransformer.

common to both the primary and secondary circuits, both currents flow through these windings.

By proper choice of the taps, the horizontal deflection winding is matched to the plate circuit of the output tube. Damping action is applied between taps 2 and 5, which include the currents in the secondary winding between taps 3 and 4. The location of the linearity circuit and the boost capacitor is substantially the same as in the basic horizontal system shown in Fig. 5-1. Tap 5 along the primary circuit winding in Fig. 5-2 is the point at which the boost voltage is fed to the output tube and is essentially the same point as the low side of the primary winding in Fig. 5-1.

The width coil, WC, acts as a variable load between taps 6 and 7, and thus controls the voltage generated between taps 3 and 4, to which the horizontal deflection winding of the yoke is connected.

Note that the cathode of the damper tube is joined to the high side of the yoke in Fig. 5-2, whereas it is the plate which is so connected in Fig. 5-1. The reason for this is the absence of polarity reversal which is provided in the transformer (shown in Fig. 5-1) by reversal of the winding sense of the connections. Since the winding between taps 1 and 5 is both primary and secondary, the voltage generated across 3 and 4 by the output-tube plate current is the voltage that is delivered to the yoke winding, and does not undergo a reversal of polarity.[1]

---

[1] As explained in Chap. 4, this is not a feature of the circuit, but of the transformer. The diode must be reversed here because the winding sense of an autotransformer (5-4) cannot be reversed.

During the forward trace, the linear rise in plate current when the output tube is conducting, tap 3 is negative relative to tap 4. This makes the cathode of the damper diode negative relative to its plate, allowing the conduction and charging boost capacitor C1.

In Fig. 5-2, when the output plate current is suddenly cut off, a high inductive kick of positive polarity is generated across the yoke winding and is applied *directly* across the transformer winding between taps 3 and 4. Its polarity is such as to make tap 3 positive relative to tap 4. (Note that this was a pulse of negative polarity in the case of the transformer coupled yoke in Fig. 5-1, and became positive across the primary winding because of the phase reversal during the transformation action in the transformer.)

The positive pulse applied across taps 3 and 4 appears across the whole primary winding (that is, between the output tube plate and ground) as a positive pulse of increased amplitude due to voltage *step-up* by autotransformer action between the windings 3 and 4 and 1 and 4. The number of turns between taps 1 and 2 is much greater than between taps 2 and 7; hence the voltage step-up between the windings 3 and 4 and the windings 1 and 4 is a function of the turns-ratio between the turns in 3 to 4 and in 1 to 4.

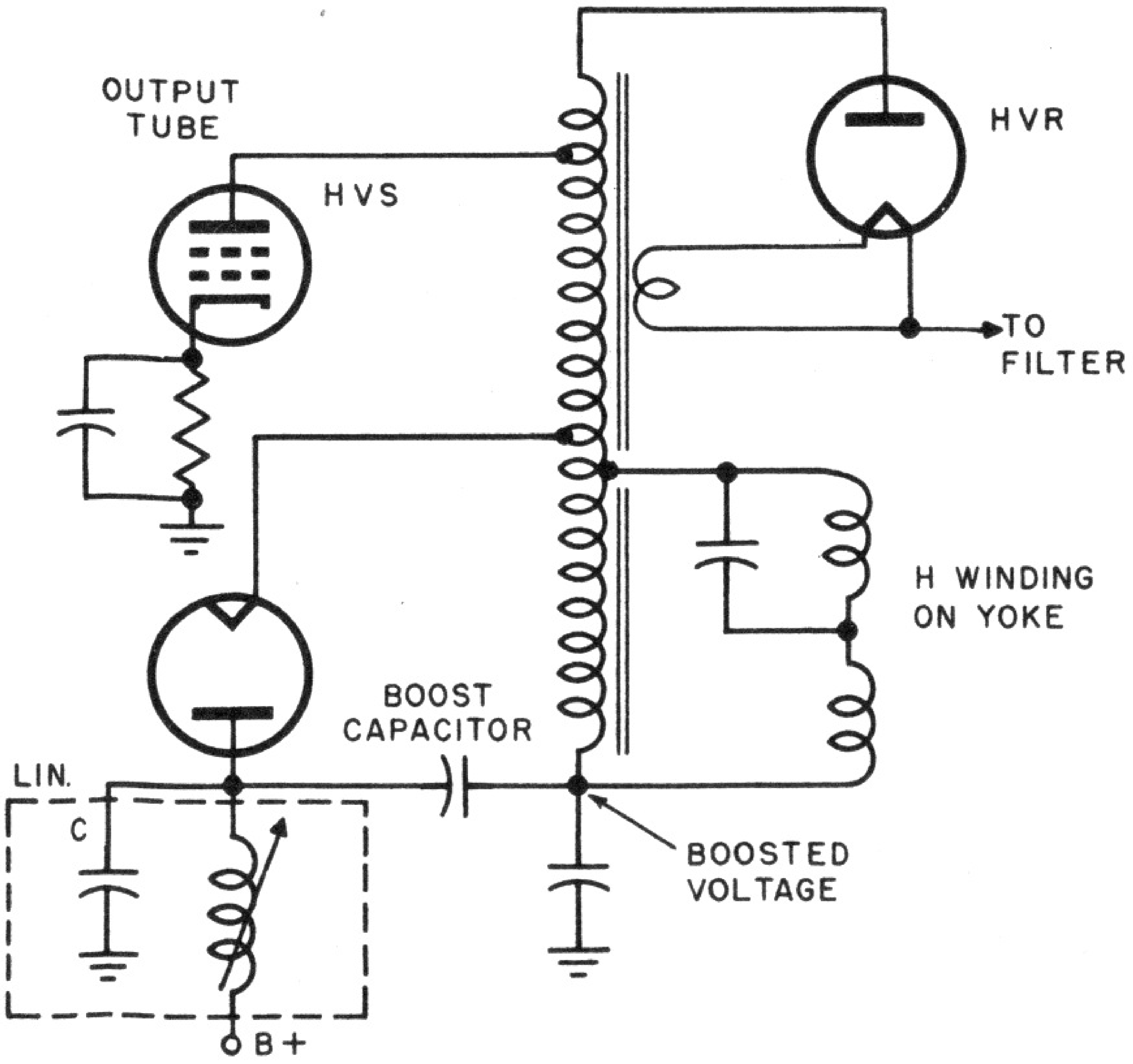

Fig. 5-3. Variation of the circuit of Fig. 5-2. In this case, the yoke winding is connected at the lower end of the autotransformer winding.

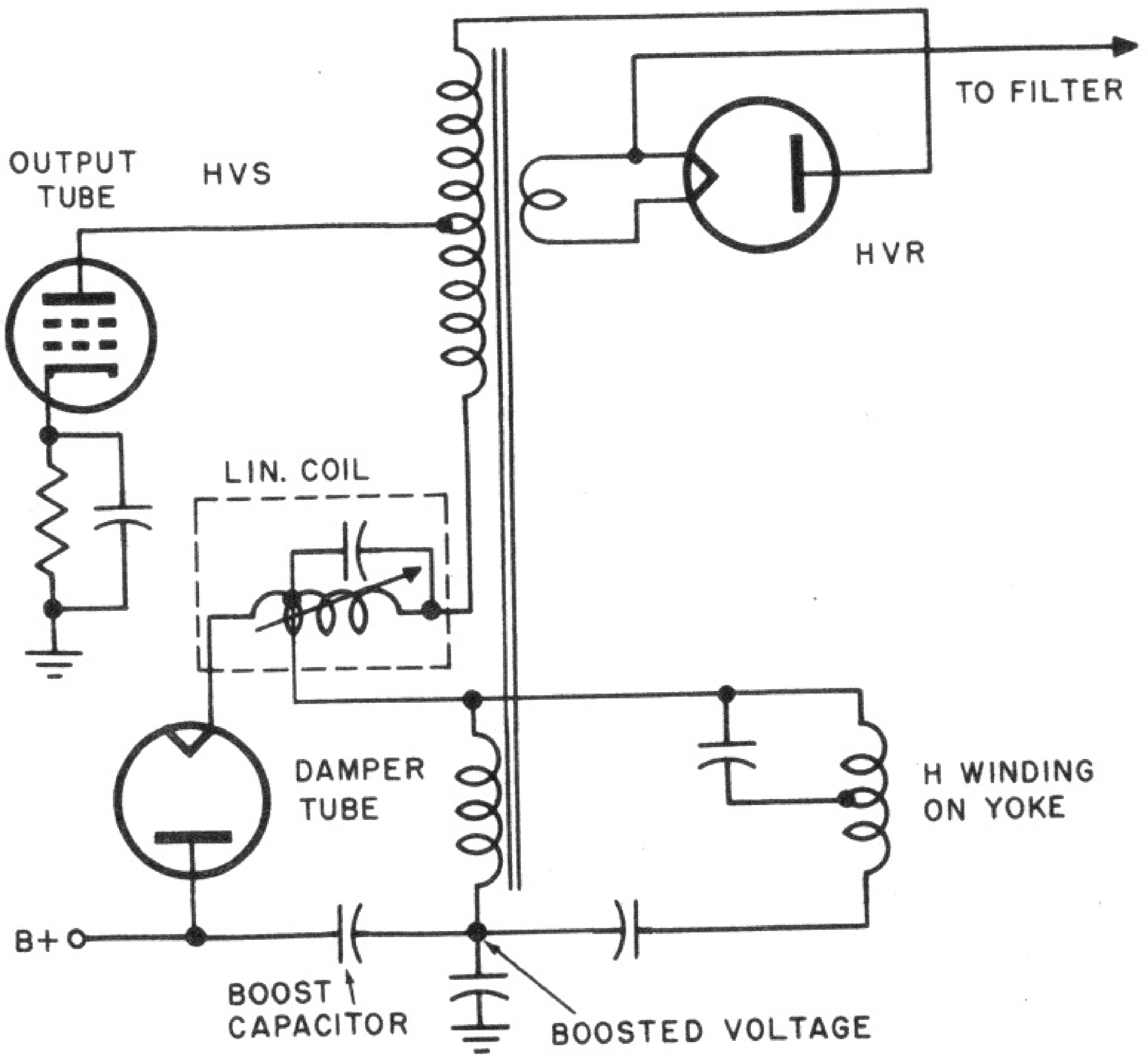

Fig. 5-4. Another variation of autotransformer circuit in which the linearity coil is connected in a different location.

Shock excitation of the whole system takes place just as in the case of the basic transformer coupled output circuit, and it accounts for the retrace in the manner already described.

Another version of the autotransformer system is shown in Fig. 5-3. In the main it is like that illustrated in Fig. 5-2, except that the yoke winding and the damper diode are connected lower down along the secondary winding. The omission of the width coil from the schematic is not significant; it is connected in any of a number of standard ways as explained in Chapter 7.

Still another autotransformer arrangement is shown in Fig. 5-4. It is like Fig. 5-3, except for the location of the linearity circuit, and for the removal of the boost capacitor from the proximity of the linearity circuit. The arrangement is sometimes referred to as the autotransformer system with *series* linearity coil. The resonant condition in the linearity system introduces a voltage into the damper circuit which affects the instantaneous damper conduction current, and so affects the voltage built up across the boost capacitor, the cumulative effect of which is to control the instantaneous plate voltage which starts conduction in the output tube and which shapes the output tube plate current over a region near the start of output tube plate current flow. In contrast to the system shown in Fig. 5-4, the linearity circuit illustrated in Fig. 5-3 is sometimes called the *shunt* linearity system.

Two additional differences exist in the series linearity coil system relative to the shunt system. The damper diode is isolated in respect to a-c, from direct connection to the main winding by the transformer action of the linearity coil itself. The cathode of the damper tube is connected to the high side of the linearity coil, the lower part of which is a link between the primary and secondary windings. This arrangement provides greater efficiency in the damping action across the transformer secondary and tends to produce better linearity of the sweep current.

The second difference concerns the loss in coupling between primary and secondary windings because of the circuit location of the linearity coil. This reduces the transformer efficiency, but it is partially compensated for by the improved action described previously. In general, however, the autotransformer system shown in Fig. 5-3 is preferred because of the greater simplicity and generally satisfactory efficiency of operation. It is the more frequently used type.

Direct-Drive System

Further increase in the efficiency of deflection and the reduction of components is obtained through the use of *direct-drive* systems (Fig. 5-5A) in which the horizontal output transformer is eliminated. A high-voltage pulse coil must be used and the horizontal deflection winding must have a *high impedance.*

The high-voltage pulse coil is an autotransformer, the primary of which is in series with the yoke winding in the plate circuit of the output tube. The lone secondary of this transformer is the high-voltage rectifier winding HVS, as shown. The primary winding of this coil is of suitable inductance (about 30 mh) so that, in series with the horizontal deflection coil, it will produce a pulse voltage within the peak rating of the horizontal output tube. The usual design uses two windings of 30 mh each (primary winding is 30 mh and yoke winding is 30 mh) so that about 3,000 volts appear across each of these coils so as to produce a 6,000-volt pulse at the output tube plate. This is stepped-up by autotransformer action for the high-voltage power supply.

Quite frequently this type of autotransformer is called the *flying saucer* because of its shape. Its windings, insulation, and general treatment are the same as for the usual horizontal output transformer. Details concerning the physical and electrical features are given in Chapter 6. Such components as shunt capacitances, the transformer itself, the damper

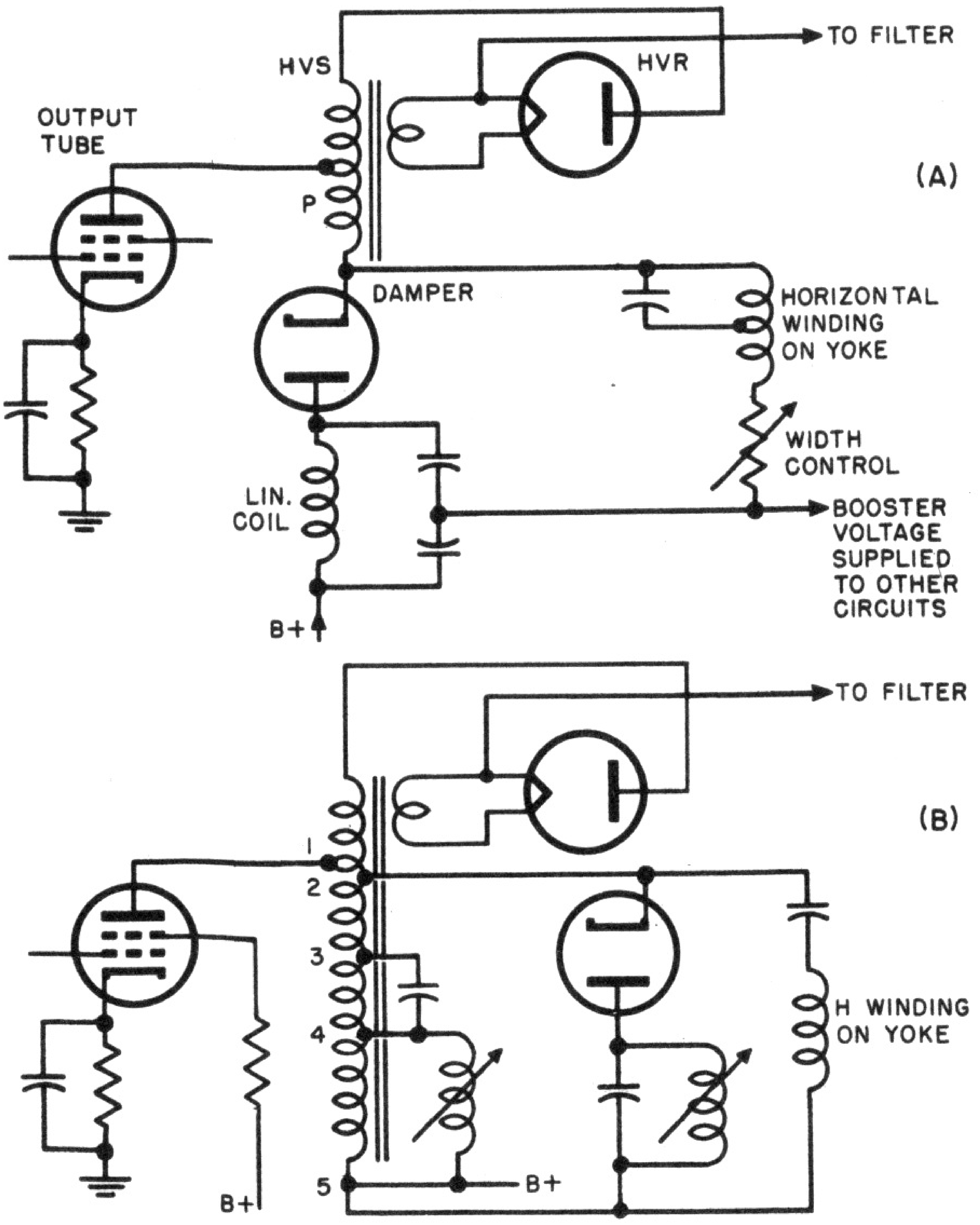

Fig. 5-5. Direct drive horizontal output systems.

diode, and connecting leads must be considered in this system as in other systems in order to achieve the desired short retrace period which, as usual, must be kept low. The resonant frequency in these systems approximates 70 kc, and achievement of the short retrace stems from exactly the same conditions of operation as described for the conventional transformer and autotransformer circuits.

Yoke lead dress is particularly important since its high impedance results in more capacitance coupling to other circuits than in the case of transformer coupling where the yoke winding is across a low-impedance step-down secondary winding. Note that in the direct-drive system of Fig. 5-5 (A) the damper diode cathode is connected near the high side of the yoke winding and that its plate is connected directly to the B+ supply. Its action is the same as in the autotransformer system.

The linearity circuit is similar to that shown in Fig 5-1. The width control, however, is a losser system in the form of a variable resistance located in the horizontal deflection coil circuit. In view of the relatively high values of current which are present in the deflection winding, these variable resistances generally are of 2 watt value. Other examples of variable resistance controls of sweep width are described elsewhere in this chapter.

Another variation in autotransformer type horizontal sweep output system design is shown in Fig. 5-5 (B).[1] This can be compared with the systems in Figs. 5-3 and 5-4. It is a new design created especially for those receivers which utilize 90-degree deflection. It is a development that includes not only the horizontal output transformer and the circuit organization, but also the 90-degree deflection yoke.

It is an autotransformer system wherein the operating efficiency of the output transformer and the circuit as a whole is improved by cancelling out the d-c component of the output tube plate current from the output transformer. It is to be noted that the windings 1 and 2 and 4 and 5 have a like number of turns and that the application of the B+ supply voltage to the output tube via the width coil and the isolated secondary 4 and 5 (through the damper tube and windings 1 and 2) results in opposite directions of the d-c component of the plate current in the transformer. Hence, the flux currents in the core of the output transformer are also in opposite directions, and being alike, they cancel each other and greatly improve the efficiency.

Variations in Width Control Circuits

Width control or control of the amplitude of the horizontal deflection coil sweep currents is attained in any one of five ways:

1. By changing the voltage step-down ratio between the secondary winding feeding the yoke relative to the primary winding.
2. By reducing the voltage input to the horizontal output tube (potentiometer type).
3. By reducing the horizontal deflection winding sweep current by means of losser systems directly in the yoke winding (potentiometer type).
4. By reducing the gain in the horizontal output tube (potentiometer type).
5. By varying the gap in the horizontal output transformer core.

Voltage step-down ratio may be adjusted by a choice of the secondary winding taps across which the width coil is connected, or by the use of different values of shunting inductance (width coil). The aim is always

---

[1] This is a General Electric development by C. E. Torsch, which at the time of this writing has not yet seen use in commercial television receivers, but will no doubt be applied in the near future.

to attain width control without sacrificing linearity and without affecting the high voltage system.

To satisfy the needs of the horizontal output transformer design, width coils are of different electrical constants. These are:

1. Low impedance shunting.
2. Combination high impedance and low impedance (shunt and series connected).
3. Medium impedance (high tap) shunting.
4. Low impedance, isolated.

Low Impedance Shunting Type

The low-impedance shunting type of width coil is a variable inductance rated at from 0.2 to 1.5 mh. Usually it is connected across the low

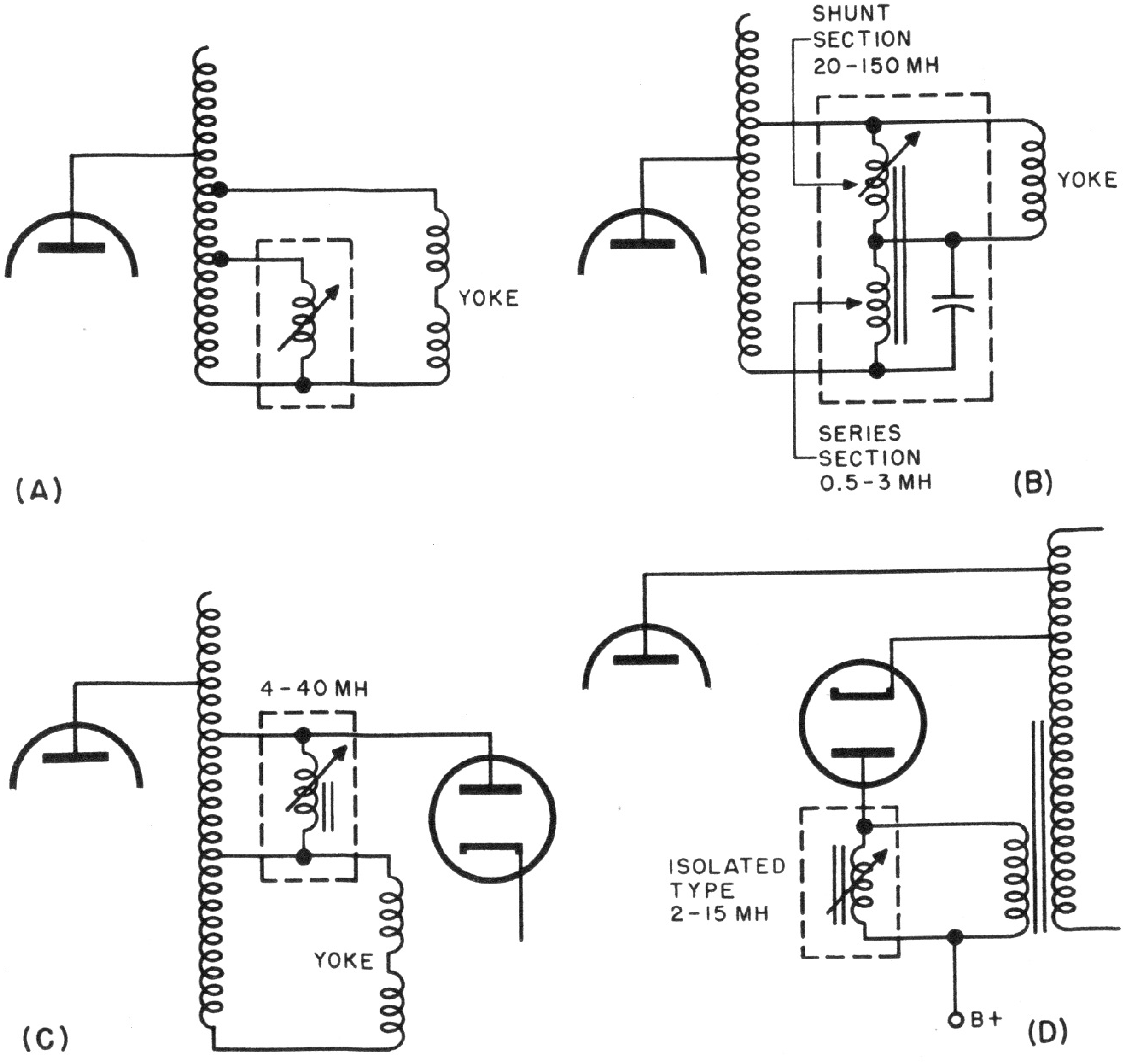

Fig. 5-6. Different types of width coil connections.

end of the secondary winding of the horizontal output transformer. Typical circuitry is shown in (A) of Fig. 5-6. This arrangement has several advantages: (1) it allows the transformer ratio to be changed with minimum effect on the high voltage; (2) it reflects a fairly constant inductance into the whole circuit and thus causes minimum variation in the retrace time, which is determined by the constants of all the components in the horizontal output system; and (3) the circuit is inexpensive and introduces only one variable.

Combination High Impedance and Low Impedance

The combination high impedance and low impedance arrangement is a variable inductor of fairly high inductance value. It is connected across the complete low-voltage secondary, with the yoke winding connected as shown in (B) of Fig. 5-6. Obviously one section of the width coil is in shunt with the yoke winding, whereas the other section is in series. The range of inductance used for the shunt section is from 20 to 200 mh, whereas for the series section it is from 8.5 to 3 mh. As the inductance is changed, the position of the tap is effectively changed. This type of circuit adds the distributed capacity of the coil across the secondary and tends to increase the retrace time.

Medium Impedance (High Tap) Shunting Type

This type of width coil generally has a range of inductance of from 4 to 10 mh and is used as shown in (C) of Fig. 5-6. It is located across taps which are associated with the high side of the damper tube and usually is above the yoke connection along the transformer secondary.

Low-Impedance Isolated Type

This is a modification of the low-impedance basic system shown in (A) of Fig. 5-6. The inductance ranges from 0.2 to 15 mh and the coil is connected in shunt with a separate winding, which is coupled to the transformer secondary, as shown in (D) of Fig. 5-6. Usually it is connected in series with the damper tube plate in the autotransformer type of horizontal output transformer.

This system is, in effect, electrically equivalent to the low tap system but allows the low side of the width coil or coils to be at a-c ground potential. In order to obtain more control range, some designs use two width coils across the winding, either one being selectable by means of a switch.

Potentiometer-Type Width Control

Potentiometer-type width controls are used in a number of ways. Examples appear in Fig. 5-7: Part (A) shows the use of the potentiometer

DRIVER INPUT CONTROL

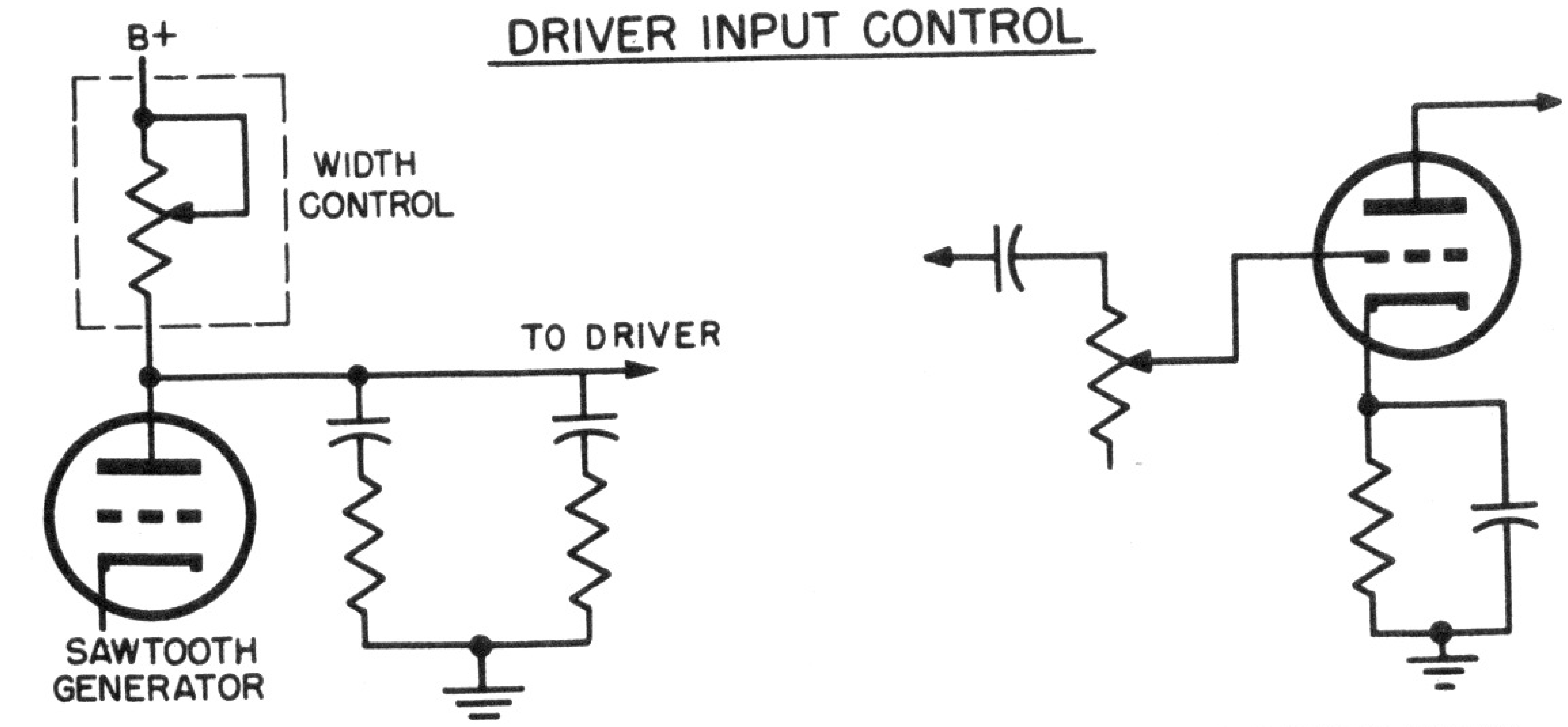

DIRECT SAWTOOTH VOLTAGE CONTROL (A)

ATTENUATING DRIVER INPUT (B)

DRIVER OUTPUT CONTROL

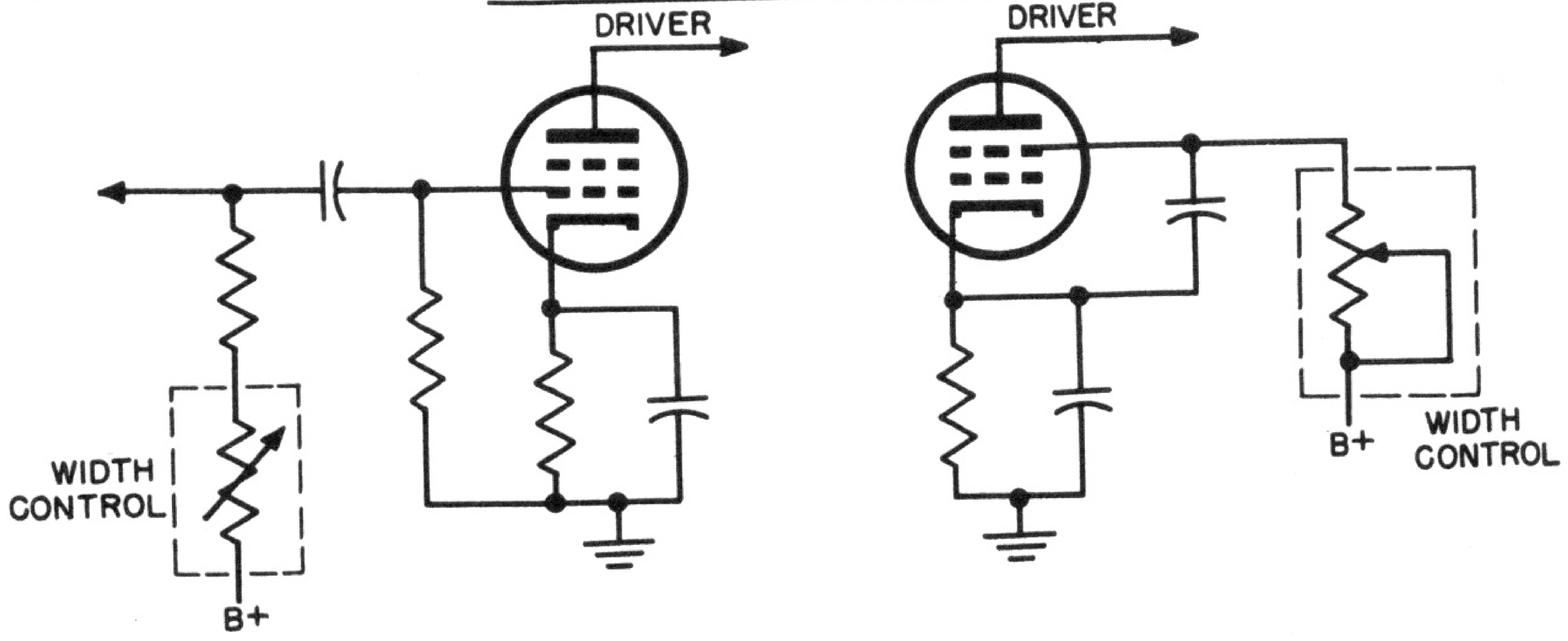

PLATE VOLTAGE CONTROL OF SAWTOOTH VOLTAGE (C)

SCREEN VOLTAGE CONTROL OF WIDTH (D)

DIRECT DRIVE WIDTH CONTROL

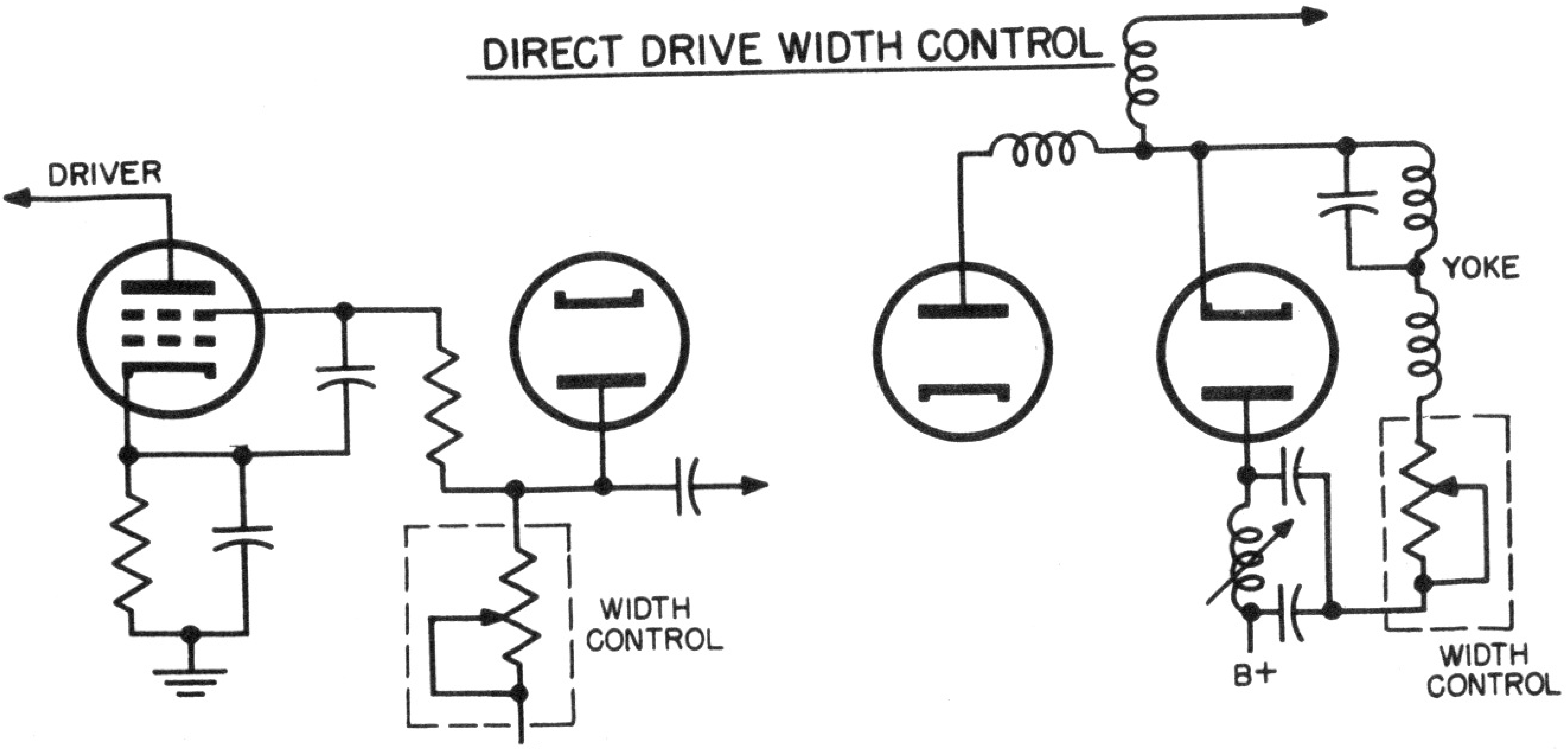

SCREEN & SUPPLY WIDTH CONTROL (E)

(F)

Fig. 5-7. Types of resistive width control circuits.

in (A) the sawtooth voltage generator system, and (B) and (C) in the input circuit of the horizontal output tube. These systems are not in general use because they possess the disadvantage of affecting the high-voltage output. Reducing the sweep width reduces this high voltage applied to the second anode. The resulting "softer" beam is deflected more, thus counteracting the initial attempt at width reduction. Increasing the sweep width increases high voltage again, so that the intended adjustment is once more nullified. The resulting variations in brightness and focus are serious disadvantages.

Figure 5-7 (D) and (E) shows two additional potentiometer-type width control circuits which affect the horizontal output tube gain, or signal voltage output. These suffer from the same weaknesses as described for similar control at the input of the horizontal output tube.

Controlling sweep width by controlling the yoke current as shown in (F) of Fig. 5-7 is a direct and efficient method in certain circuits, such as the direct-drive arrangement. If the whole resonant system can stand to have its *Q* lessened, the losser system is practicable. Other types of horizontal output systems do not as readily accept such losser means of controlling width.

A completely different manner of width control is used in some modern television receivers. It consists of varying the air-gap in the core of the horizontal output transformer. It is a mechanical adjustment by means of a movable threaded shaft passing through a stationary tapped hole. Turning the width control shaft moves the entire front panel of the transformer, to which is attached one side of the core assembly. Changing the air-gap in this manner varies the voltage output from the transformer, and hence varies the voltage applied across the horizontal deflection windings. The mechanical details of this arrangement are shown in Chapter 7.

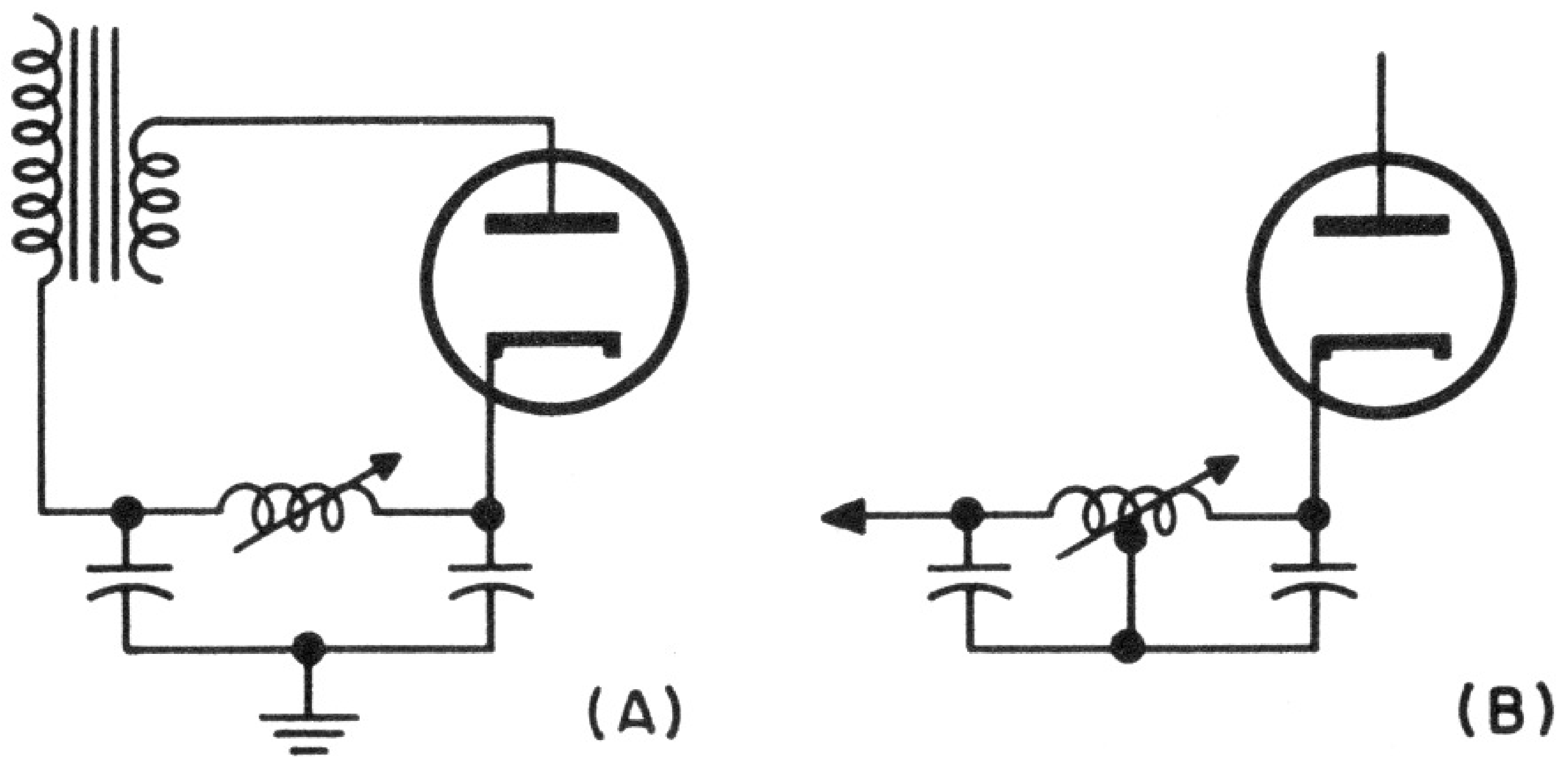

Fig. 5-8. (A) Untapped, and (B) tapped, linearity coils.

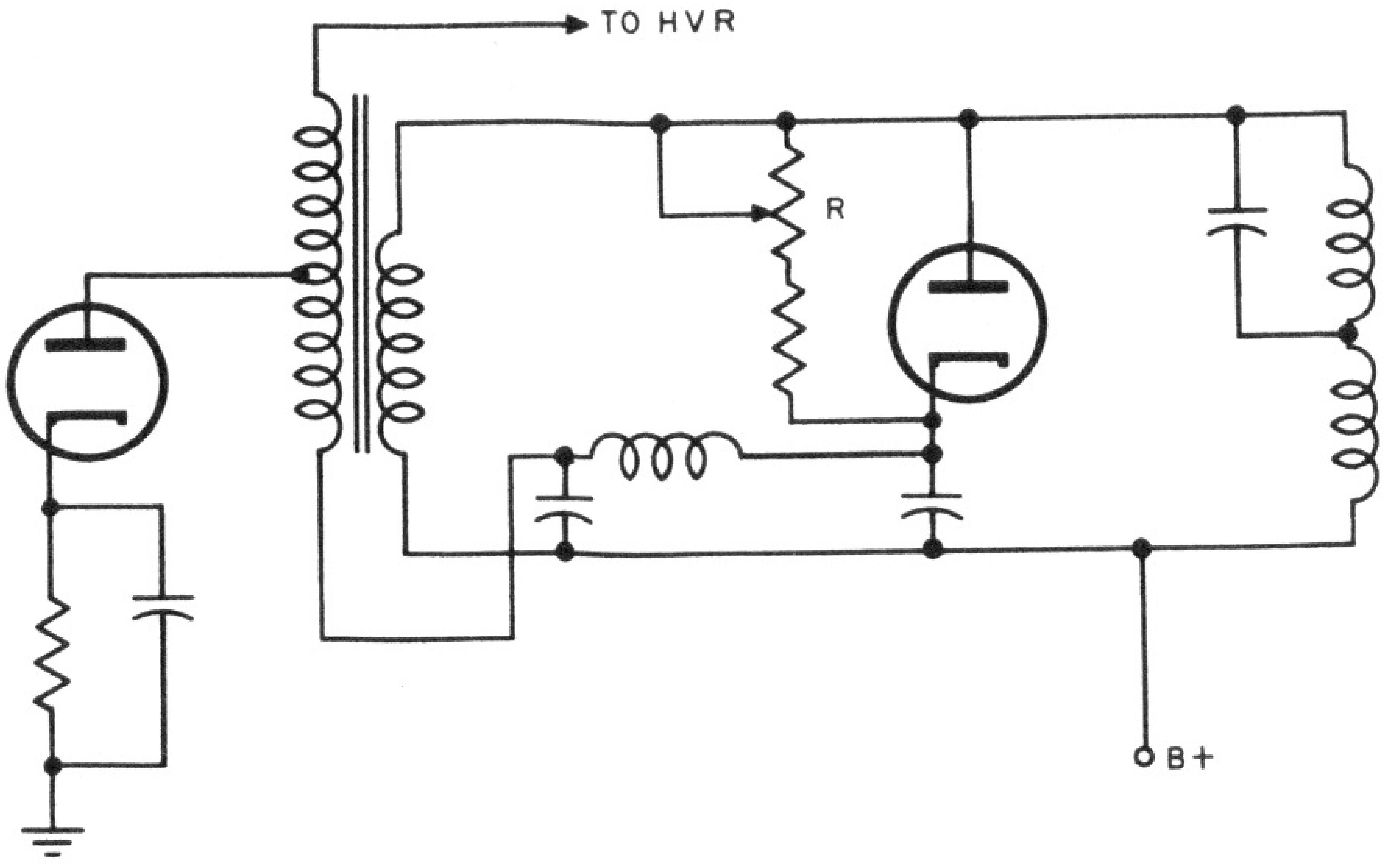

Fig. 5-9. Use of a variable resistance in conjunction with the diode damper tube.

Variations in Linearity Circuits

Linearity coils have been shown as parts of complete circuits and are repeated for convenience in Fig. 5-8 in brief form.

The untapped coil (A) generally has an inductance range of from 1 to 10 mh, although in some isolated cases the inductance is substantially higher. The resonating capacitors usually range from 0.05 to 0.1 mf; specific values for each make of receiver are generally shown on the schematic and parts list.

The tapped type of linearity coil (B) varies in ductance from 0.5 to 25 mh and the capacitors used with it range from 0.3 to 0.2 mf.

The fundamental condition in these circuits is that the coil must resonate in the neighborhood of 15,750 cps, with some latitude to satisfy the distributed capacitance present in the horizontal output system.

The aim of the tapped coil with resonating capacitors across each section is to achieve some step-up action, using the coil as an autotransformer, and thus to add to the resonant current peak when it is used to control linearity.

Variation in Damper Systems

The *diode* damper systems shown in Chapter 4 and in Figs. 5-1 through 5-5 are very popular. Sometimes the function of the diode tube is aided by the use of an additional variable resistance which is connected as shown in Fig. 5-9. Occasionally two diodes are used in parallel to act as dampers.

Another damper tube system, used in the early versions of television receivers and containing output circuits similar to the basic ones being treated herein, employed a heavy duty triode. The circuitry is symbolized in Fig. 5-10. The triode was used as a variable resistance load on the yoke system so as to control the decay (linearity) of the transient oscilla-

Fig. 5-10. Use of a triode as a damper.

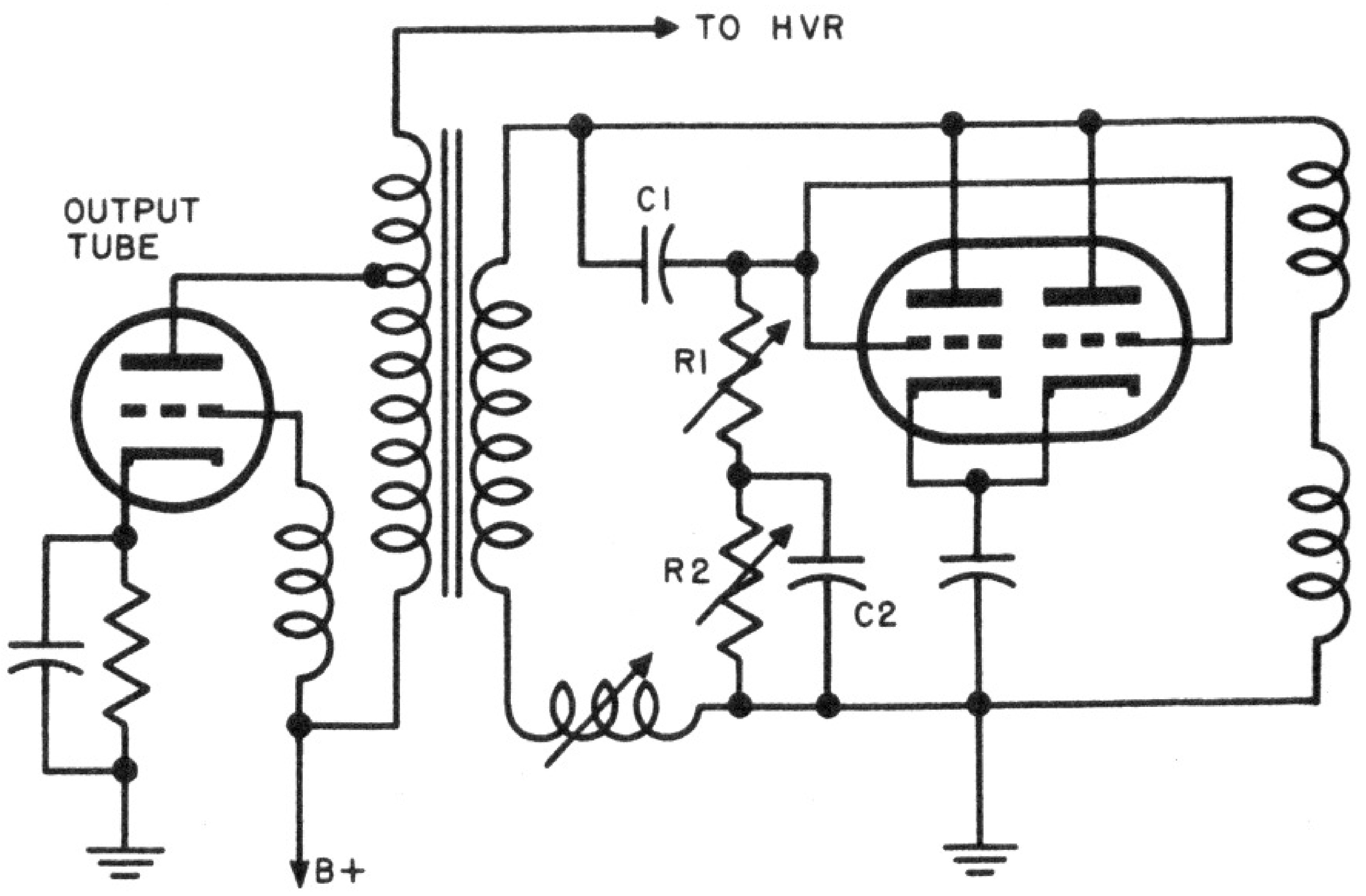

tory current and hence the first half of the forward-trace sweep current. In order to do this properly the control grid was fed a specially shaped control voltage which was related to the sweep voltage across the yoke. The wave shaping was done by the capacitive-resistive network C1, R1, R2, and C2.

High Voltage Systems Separate from the Output Circuit

Two other types of high-voltage power supply circuits have been used in a few TV receivers, but since they are separate from the output system, they do not fall within the scope of this book. However, they are indirectly of interest because of the effect of high voltage on the "stiffness" of the beam during deflection, and therefore the following brief descriptions are included.

R-f Power Supply

An r-f oscillator operating in the range from 200 to 300 kc generates a sine wave (approximately) output voltage. The resonant circuit, plus an autotransformer arrangement, step up this voltage to a suitable value for application to the high-voltage rectifier plate. It is then rectified and filtered in the usual manner. In this type, the oscillator operates continuously and can cause interference to the r-f and i-f sections of the receiver.

Pulsed-Type Power Supply

This is similar to the r-f type, except that the oscillator is normally biased out of operation by a positive voltage applied to the cathode from a voltage divider connected to B+. Negative voltage pulses generated by the horizontal output system are then applied to the cathode. These drive the cathode to a relatively low bias, thus allowing oscillator operation only during retrace time, when the picture is blanked and thus no interference is caused. The output "bursts" of r-f are then amplified in an r-f amplifier stage, which then applies them through an autotransformer to the high-voltage rectifier. From there the operation is the same as in other systems.

Although the pulse method eliminates the interference characteristic of the r-f type, it is seldom used because of the extra circuitry required. An example of the pulsed-type supply is shown in Fig. 5-11.

Voltage Multipliers

Some of the early TV receivers functioned with comparatively high voltages applied to the second anode of the picture tube (these approximated 20 to 30 kv). Later models of TV receivers with large picture tubes may require 15 to 18 kv. To produce the high voltages directly in the horizontal output transformer introduced insulation problems. The easier method finally developed was one that multiplied voltages of the rectifier system by alternately charging two or more capacitors through different paths in such a fashion that the voltages built up across the capacitors and were additive.

An example is given in Fig. 5-12. Two half-wave rectifiers, V1 and V2, are used. A single horizontal output transformer supplies simultaneous high-voltage pulses to both rectifiers. One path is directly to the plate of V1, whereas the other path is through capacitor C1 to the plate of V2. The pulse applied to V1 charges capacitor C2 to substantially the

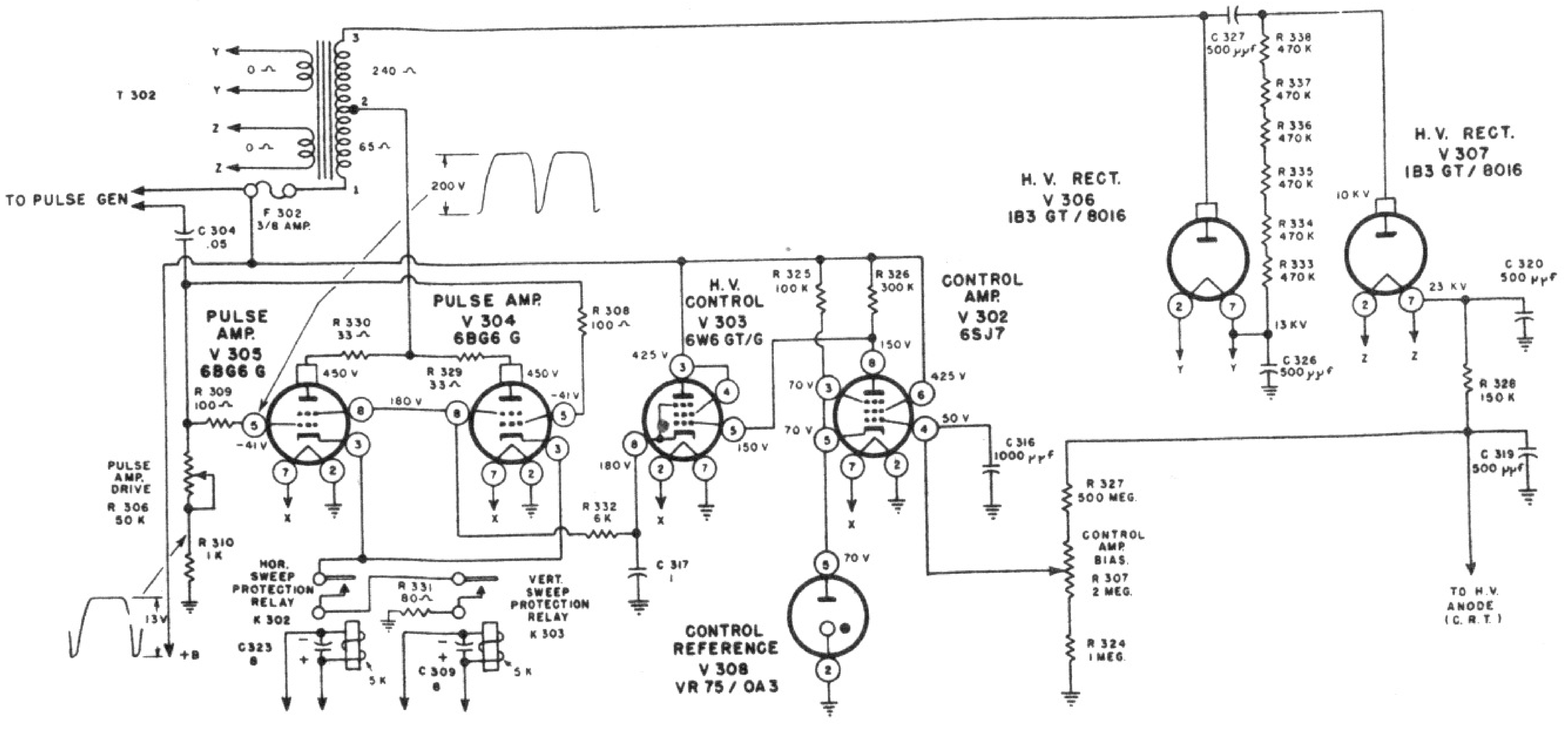

***Courtesy of* Dumont**

Fig. 5-11. Pulsed-type, high-voltage power supply used in the Dumont RA-119 TV receiver.

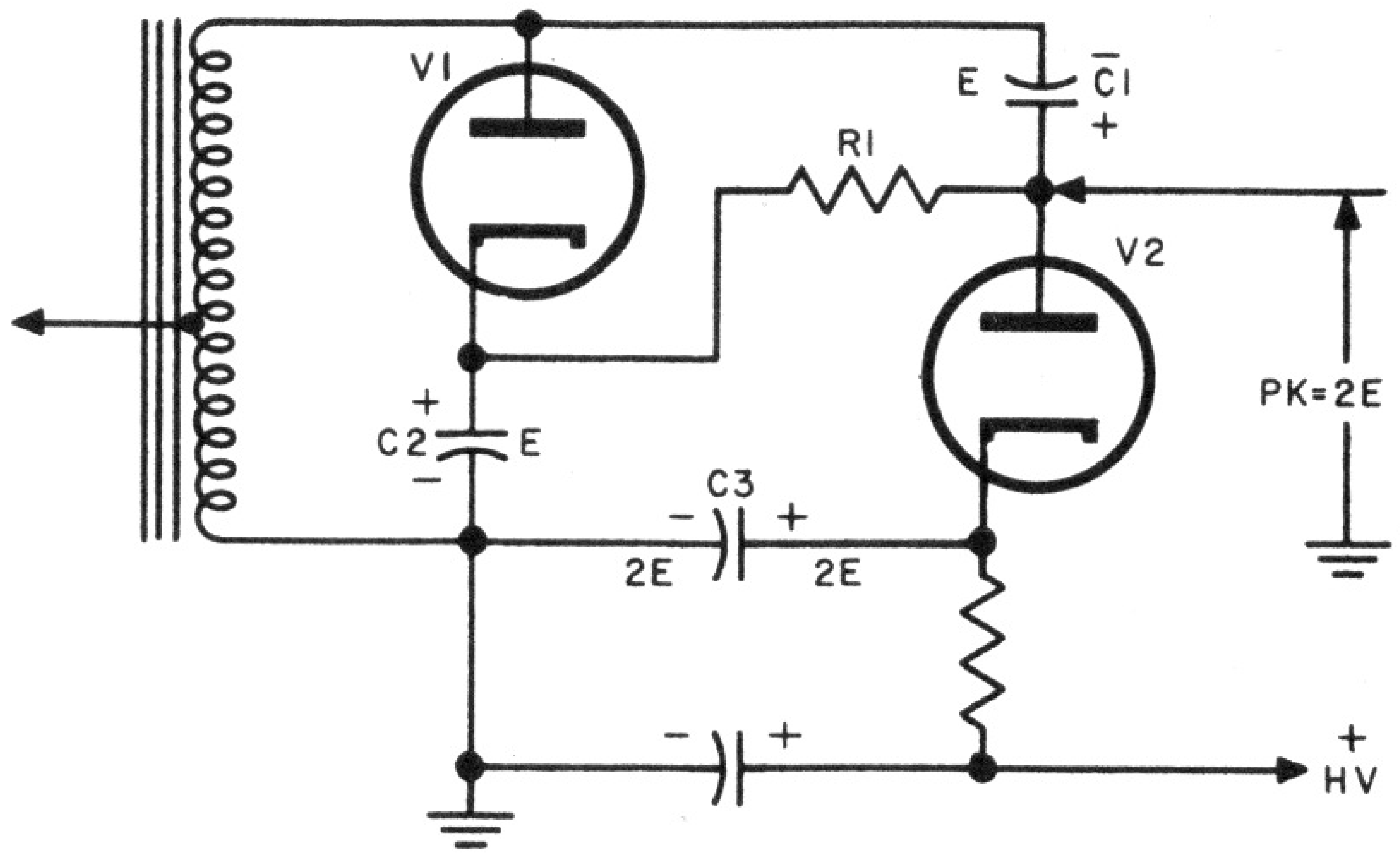

Fig. 5-12. Simplified practical circuit for voltage doubling.

peak value of the input pulse. Let us assume that the peak voltage of the pulse received from the high-voltage winding of the horizontal output transformer is 10,000 volts, so that the voltage across C2 is also 10,000 volts. When the top of the transformer winding goes negative, C2 discharges through R1 and C1, charging the latter to peak voltage *E*.

The same high-voltage pulse also is applied to V2, where rectification also takes place and charges C3. But because the voltage across C1 (*E*) is effectively in series with the a-c to V2, the V2 peak plate voltage is 2*E* and C3 is charged to 2*E* (20,000 volts).

Rectifier filament voltage is secured from the horizontal output transformer by using two separate filament windings, each being a one-turn loop wound around the transformer core. Note that the filament of V1 is at two times the potential of the V2 filament relative to ground, and must be insulated accordingly. High voltage leakage problems are discussed in Chapter 7.

Another example of a voltage multiplier system used in some early TV receivers, and which required from 25 to 30 kv for the second anode

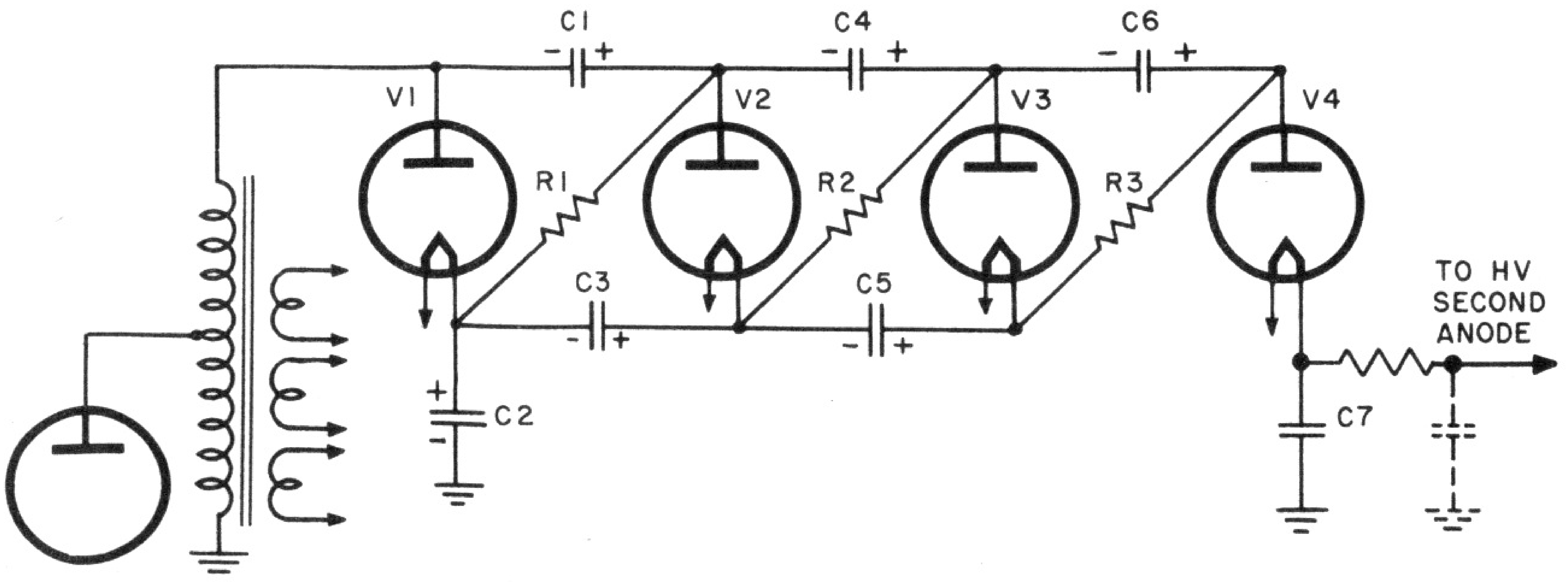

Fig. 5-13. Voltage quadrupler circuit.

operation, is shown in Figure 5-13. Whereas Fig. 5-12 illustrated a voltage doubler system, Fig. 5-13 shows a voltage quadrupler arrangement.

Notice that the circuit associated with V1 and V2 is the same as that of Fig. 5-12, except that C3 is returned to the top of C2 instead of to ground. Thus, the doubled voltage is across C2 and C3 in series, discharging on the negative half-cycle to charge C1 and C4 to 2*E*, and this peak voltage 2*E* is applied in series with the transformer pulse to V3 to 3*E*. The same process is repeated with V3 and V4 so that a d-c voltage of 4*E* appears across C7 and at the output. It is evident, then, that the peak of the pulse from the autotransformer need be only one-fourth the required d-c anode voltage, an important advantage when the matter is relatively high (15 kv and more).

CHAPTER 6

THE DEFLECTION YOKE

In the chain of components forming a sweep output system, the end device is the deflection winding. Terminating the two sweep output systems of a television receiver is the deflection yoke. It contains the vertical and the horizontal deflection coils and whatever other R and C circuit components are directly associated with them. The deflection yoke is the device which translates the electrical energy corresponding to the two sweep currents into prescribed motion by the electron beam in the picture tube.

The Deflection Yoke

When shown schematically the deflection yoke consists of two pairs of coils; one pair for vertical deflection and the other pair for horizontal deflection. This is shown in Fig. 6-1. The individual pairs of coils illustrated in Chapters 3 and 4 have been combined into one illustration. The two pairs of windings are usually diagrammed at right angles to each other, with the vertical coils located in the vertical plane and the

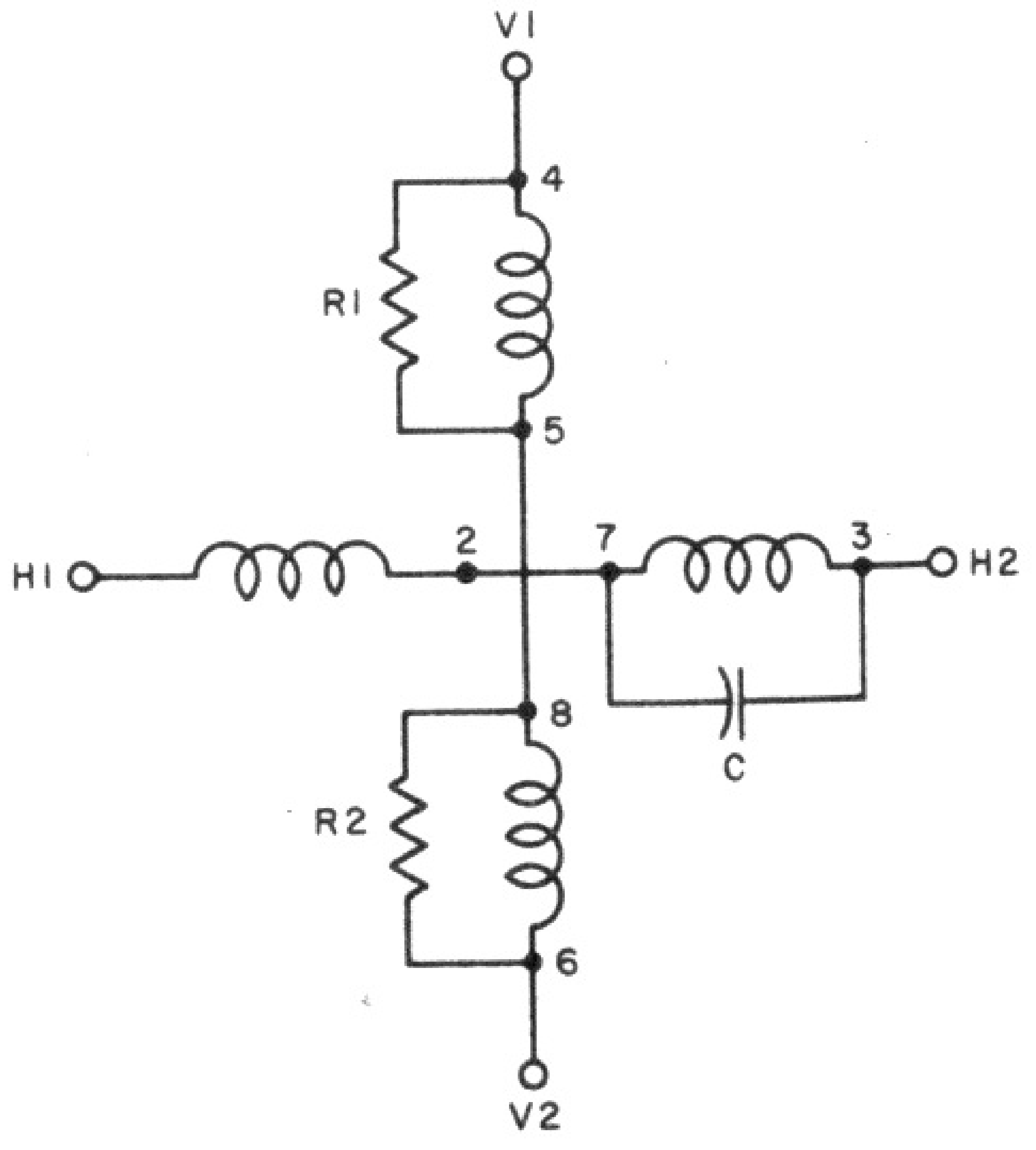

Fig. 6-1. Schematic representation of the deflection coils of the picture tube yoke.

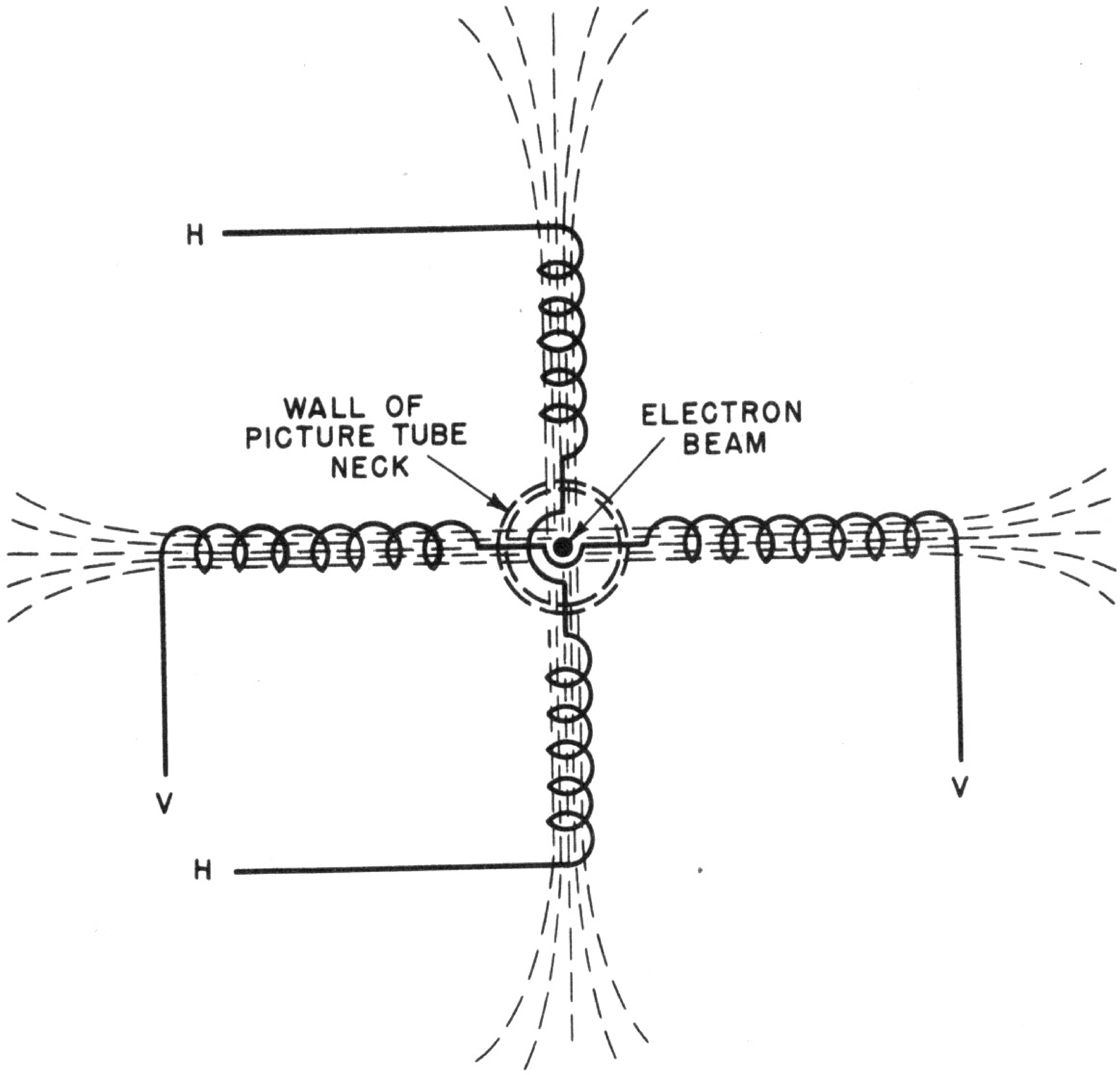

Fig. 6-2. Simplified illustration of the organization of the deflection yoke system.

horizontal coils located in the horizontal plane. This happens to be the exact opposite of the way in which they are oriented around the neck of the picture tube, but it is a standard practice in illustration nevertheless.

Usually the coils are labeled vertical and horizontal, but sometimes they are not. One means of recognizing them is by the presence of the damping resistors across each of the vertical coils and the balancing capacitor across one of the horizontal coils. Identification by this means is not positive because the damping elements may possibly be omitted, depending on the purpose of the schematic. When illustrated in receiver schematics, the damping and balancing elements referred to are shown. In some cases the balancing system across the high horizontal coil consists of a series combination of a resistor and a capacitor. Their actions are discussed later in this chapter.

It has also become standard practice in many illustrations of deflection yoke coils to label the terminations of the windings as shown in Fig. 6-1. These terminal numbers usually appear on the outside or the inside of the yoke housing and are located there as a convenience when

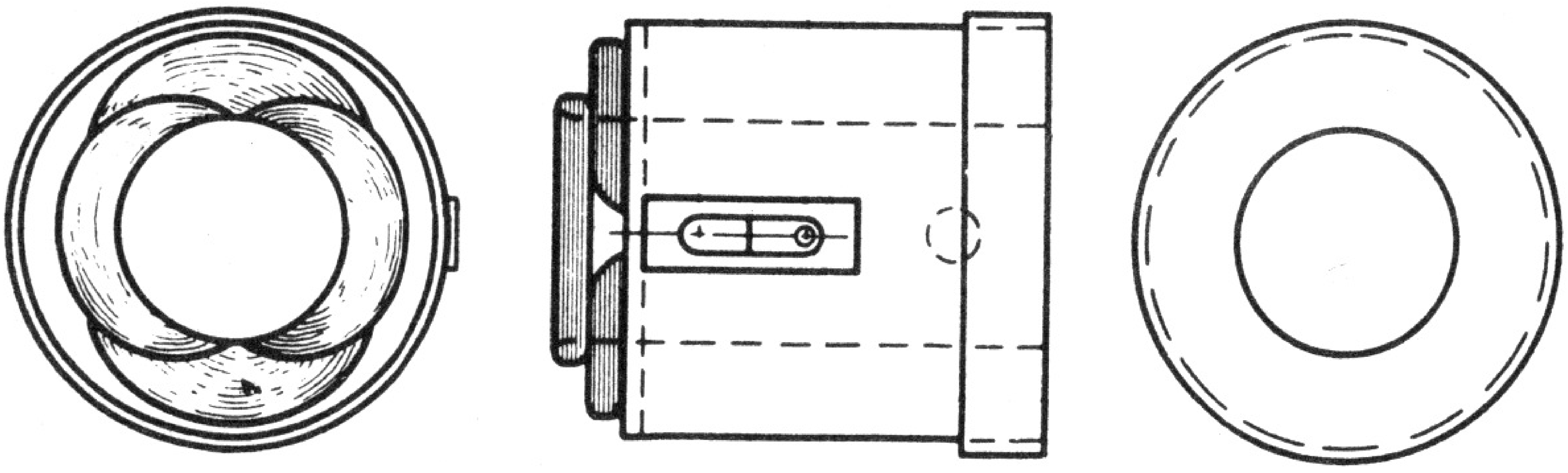

Fig. 6-3. Views of typical deflection yoke windings.

it is necessary to check the continuity of the windings or when making connections to the coils. The high side of the horizontal deflection windings is numbered 3 and the other terminals are as shown. In similar manner the terminals on the two vertical windings bear the numbers 4, 5, 8, and 6, with terminal 6 being the high side of the vertical system.

A simplified illustration of the organization of the deflection system is given in Fig. 6-2. The two pairs of deflection coils are shown in position around the neck of the picture tube. The lines running through the coils indicate the electromagnetic field which fills the space between the coils, penetrates through the neck of the tube, and hence acts on the electron beam, which is shown here as a heavy dot. This is an end-on view of the tube, with the beam coming out of the paper towards the reader. The vertical deflection coils are positioned along a horizontal plane and the horizontal deflection coils are positioned in a vertical plane relative to the horizontal axis of the picture tube screen.

Fig. 6-4. End view of yoke windings.

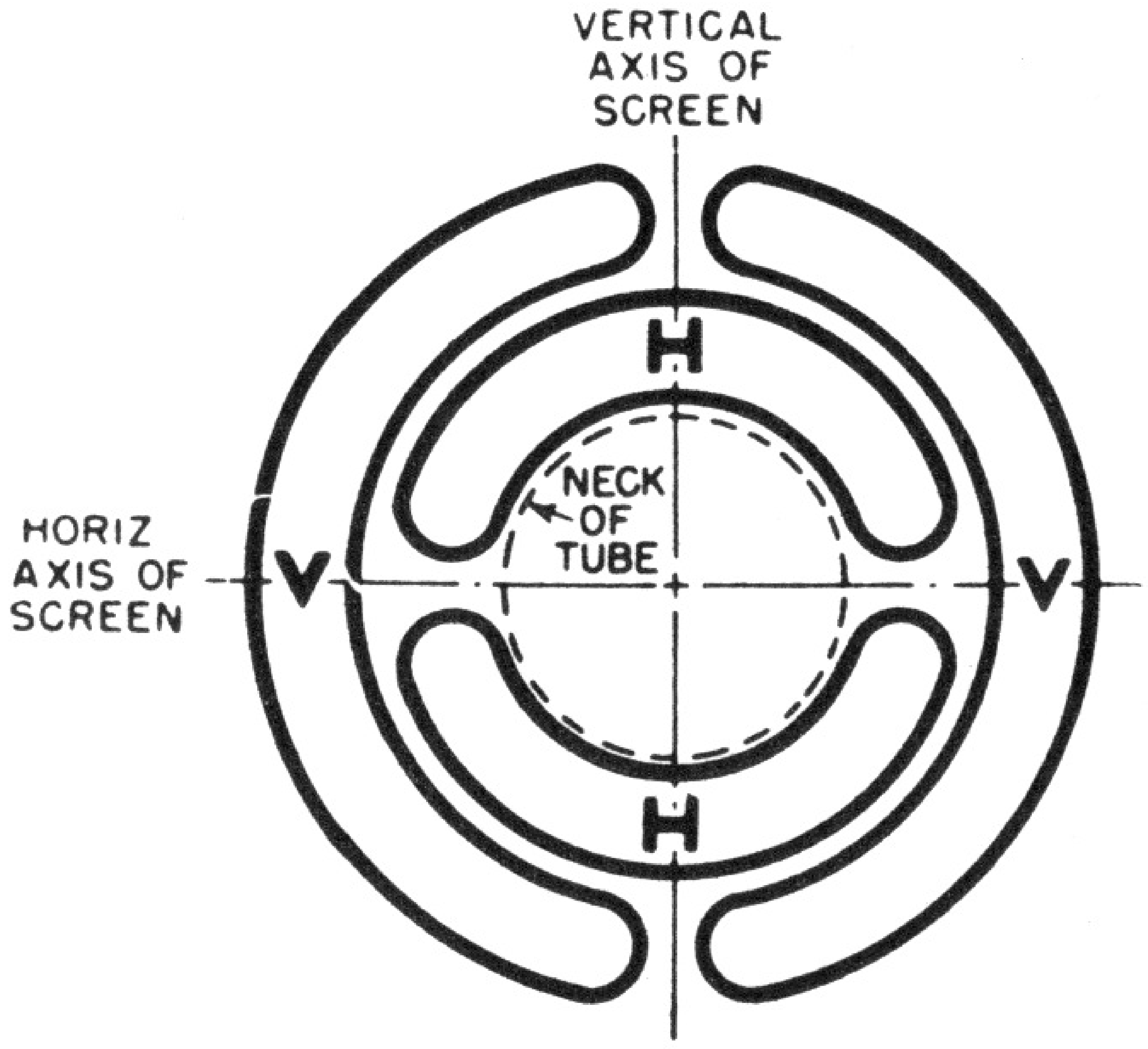

Physical Structure of Yoke

Physically the deflection yoke consists of two sets of interleaved, flat wound coils formed into a circle so as to slide over and fit closely around the neck of the picture tube. The ends of the winding are turned up to varying degree so that the yoke can be placed as far forward toward the neck of the tube near the flare as the shape of the tube envelope will allow.

Three views of the deflection yoke are shown in Fig. 6-3. Other views of the windings are shown in Fig. 6-4.

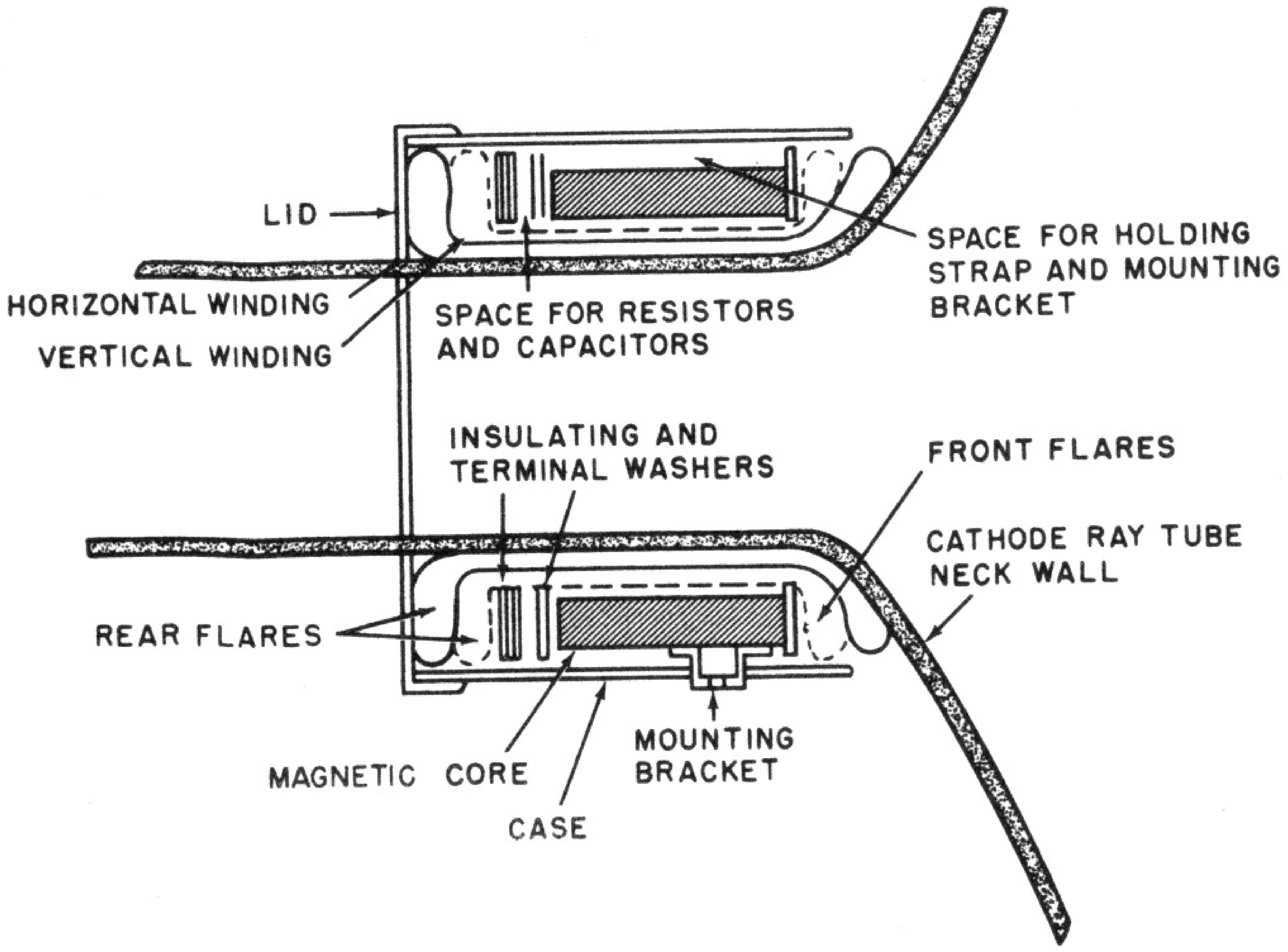

Fig. 6-5. Typical structure of assembled yoke.

Yokes have a winding structure that is self-supporting. Disassembly of a yoke will show the windings nesting together and held by tape, with the butting edges sometimes held apart by thin fiber or wood spacers. The vertical windings always are placed on the outside of the horizontal windings, overlapping but not completely surrounding the latter. The degree of overlap can be seen in the end-on views in Fig. 6-4.

Between the two sets of windings is placed an insulating film to prevent electrical breakdown. Sometimes this is baked on after the coils are formed. The voltage difference between the two sets of coils is substantial; as much as 2500 volts can be the momentary pulse amplitude during horizontal retrace across the horizontal deflection coils. Because of the voltages present across these coils the insulation between windings is such as to allow the application of from 2000 to 3000 volts peak, 60-cps test voltage between the horizontal and vertical windings and between the horizontal winding and the shell that houses the coils. Between the vertical coils and the shell, the insulation rating varies from 1000 volts peak to as high as 2000 volts peak, 60 cps.

After the coils have been shaped and organized into a yoke assembly, a ring of magnetic core material is placed around the vertical windings (these are the outside windings). A cross-section side view of a deflection yoke is shown in Fig. 6-5 and the location of the core material can be readily seen. The core usually fits snugly around the vertical winding and is self-supporting, except when iron wire is used.

Core Materials

Core designs can usually be divided into four categories. These are (1) iron wire; (2) powdered iron; (3) ferrite; and (4) flake iron.

Iron wire cores consist of one or two thousand turns of fine iron wire wound around the outside of the vertical coils. A holding strap and mounting bridge surround the wire to keep it tightly coiled. Iron wire was the first material used and, while it has been outmoded by other materials, it still finds replacement use. This type is difficult to service because internal repair requires the removal of the iron wire and reassembly after repair. Obviously the only practical solution then is replacement of the yoke as a whole.

Powdered iron, sometimes called electrolytic iron, is molded into semi-cylinders which fit around the outside of the vertical coils. This material can be distinguished from others by its smooth and fairly strong outside surface; the half-cores are held in place by a strap, which in turn holds the mounting bridge in place. When reassembling this type of core the strap should be pulled together as tightly as possible in order to make the edges of the core pieces butt together; care should be taken, however, not to crack the cores in doing this, although such damage will affect receiver operation only slightly in the form of reduced vertical size of the raster.

Ferrite cores are the most efficient type used in deflecting yokes. This material uses the same configuration as the powdered iron but is intensely hard, brittle, and has a grayish black and fairly smooth exterior, although not as shiny as powdered iron. The durability and strength is greater than powdered iron and its electrical and magnetic properties are definitely superior, particularly in horizontal operation where the whole output circuit must be an efficient oscillating system. These cores too are held in position by the familiar strap and bridge arrangement; butting edges are desired when assembling, but air gaps are not so important as in powdered iron yokes.

Flake iron in yoke cores gives performance intermediate between powdered iron and ferrite; it resembles powdered iron and really is a type of it, except that it provides larger particles of iron to obtain greater permeability at 60 cps. The high frequency (horizontal) performance is usually 5 to 10 percent less than that of ferrite, but from an economy standpoint, flake iron is used by a great many yoke manufacturers. In addition, since it is not so hard and brittle as ferrite, it can be held dimensionally to closer tolerances and in critical positions sometimes makes a better mechanical structure.

Mechanical Features

Mechanical features deal with the case and terminal arrangements. Most cases are of tubular fiber, surrounding the core structure anchored to it by various means, and with a slot through which the mounting bridge protrudes. With this construction, the terminals are usually mounted around the back circumference of the core and have the damping resistors and ringing capacitors soldered between appropriate positions. Internal lugging has been used and gives a shorter over-all case, which aids in fitting the yoke on short necked tubes.

Some GE models use an aluminum case completely surrounding the coils, with a flange on the *front* end supporting the front flare of the windings and holding the terminal board. There are also RCA models enclosing the windings in a bakelite housing with a wide strap and bridge holding the core pieces against the housing. Several examples of mechanical construction appear in Fig. 6-6.

Deflection Characteristics

The amount of deflection obtained in the vertical and horizontal directions is a function of the peak values of the sweep current present in the respective windings, assuming perfect yoke windings. Following in line, this is governed by the peak to peak value of the sweep voltage applied and by the electrical characteristics of the two deflection coil systems.

To make the story complete, it is necessary to include also the voltage applied to the second anode of the picture tube. This voltage displays a controlling effect on the amount of deflection obtained, even when the vertical and horizontal sweep currents are correct. If for some reason the second anode voltage is *higher* than it should be, or is made higher, and the two deflection sweep currents are normal in value, *reduced*

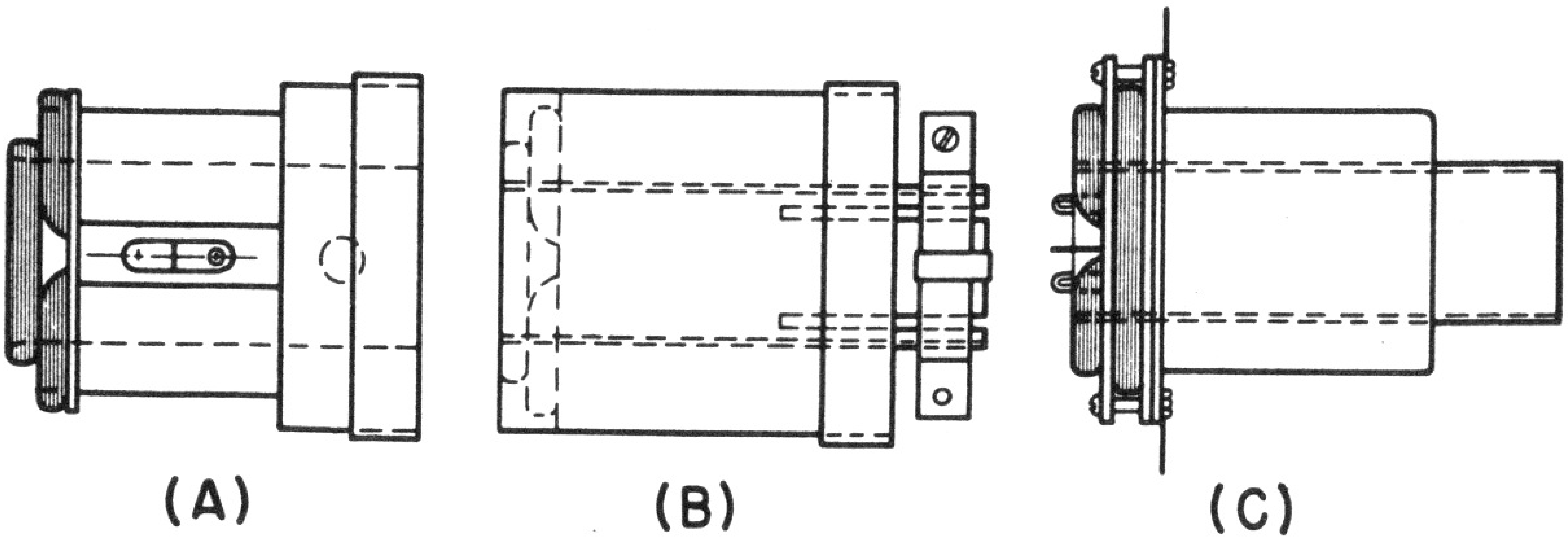

Fig. 6-6. Examples of mechanical construction of yokes.

deflection results. The higher second-anode voltage speeds up the beam. This is referred to as *stiffening* the beam. When this happens, more than the normal amount of deflection current (hence deflection voltage) is required to produce normal picture dimensions. Reduced second-anode voltage *softens* the beam by slowing it down, and normal values of sweep voltage applied to the deflection yoke result in *increased* deflection in both vertical and horizontal directions. Any action that influences the deflecting capability influences the picture dimensions. This situation has a bearing on the suitability of deflection yokes used as replacements in television receivers that are operated at different values of second anode voltage. It receives attention later in this chapter.

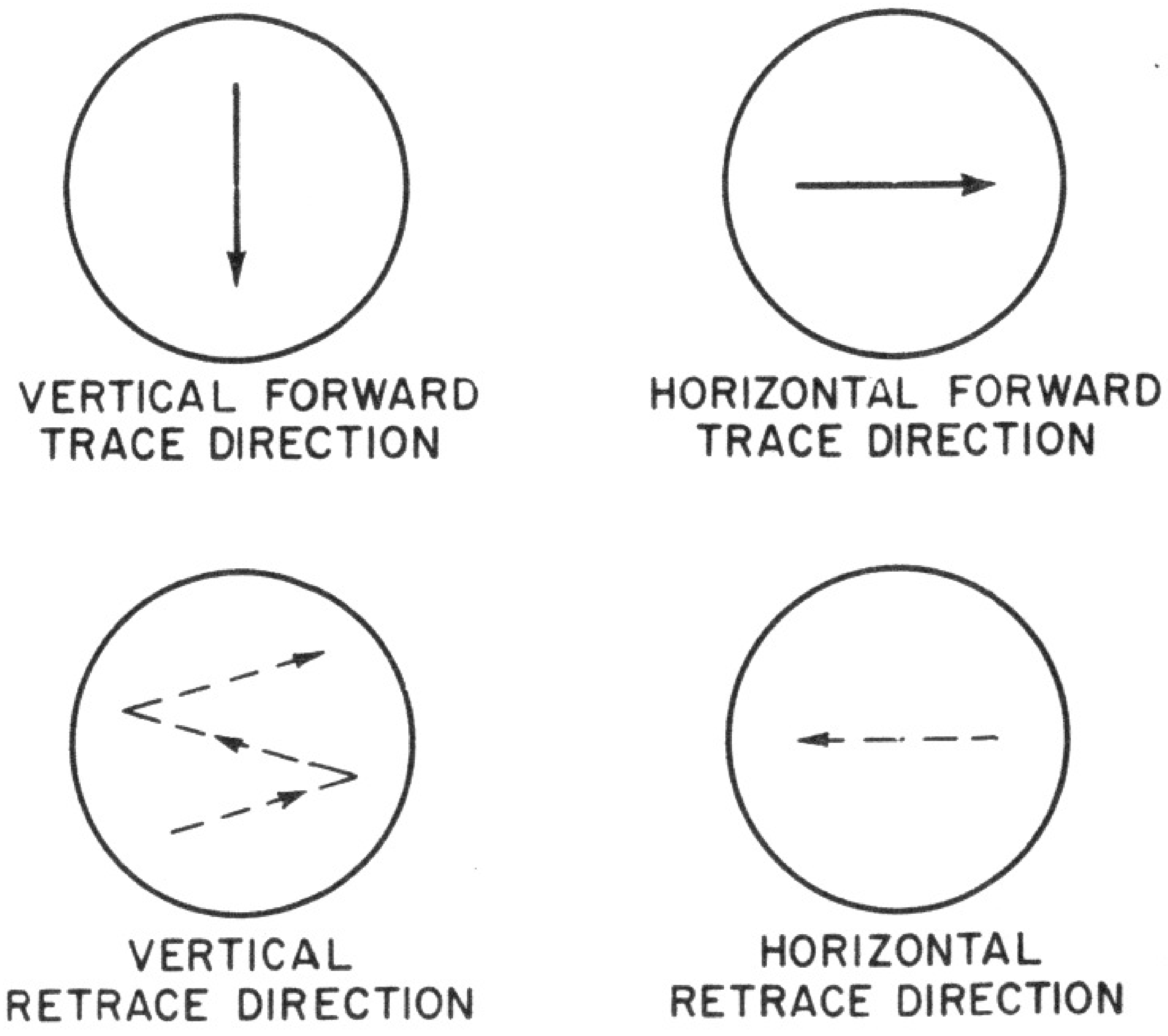

Fig. 6-7. Directions in which the beam must be deflected during the different TV sweep operations. Views are from the front (viewing side) of the screen.

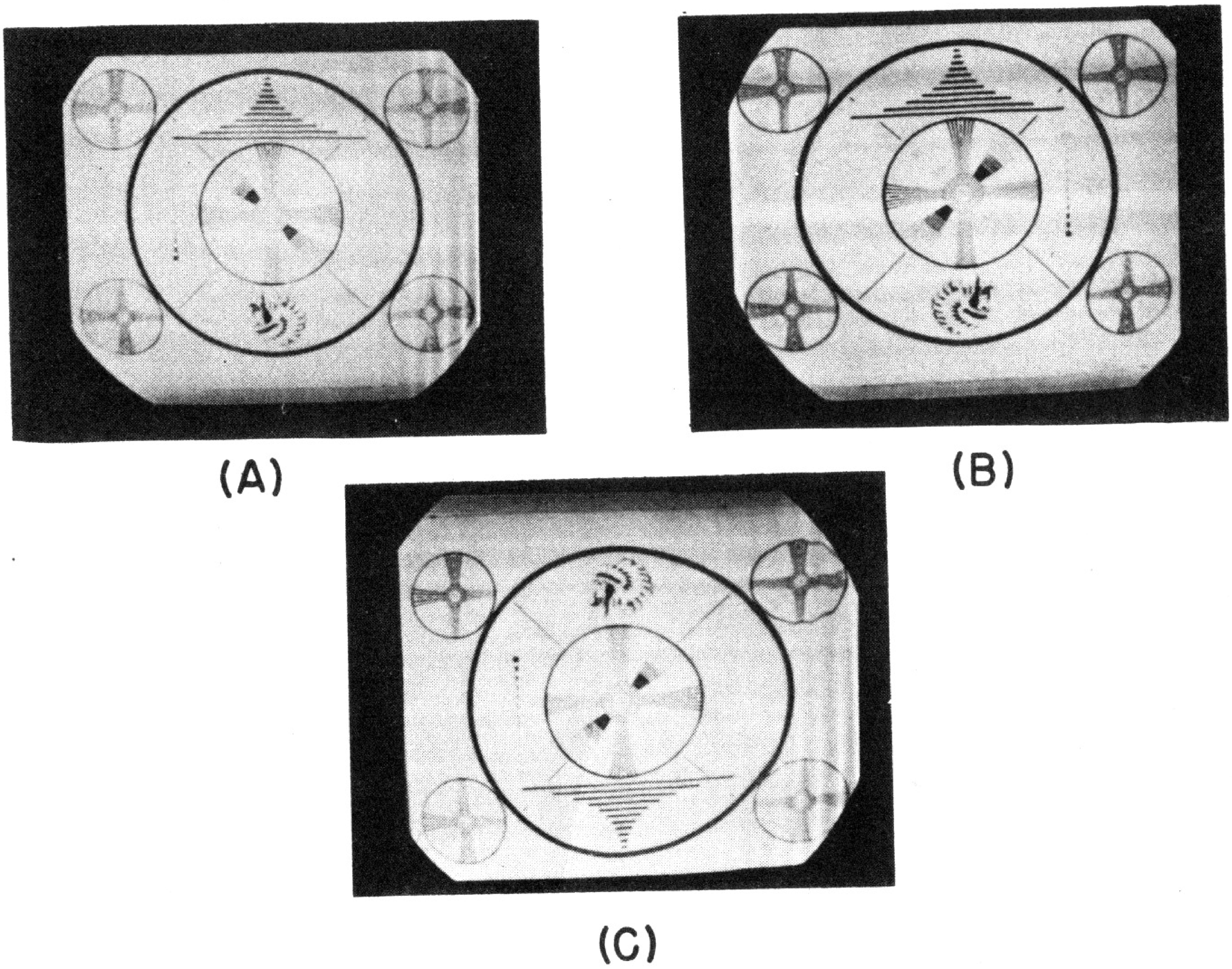

Fig. 6-8. Effect on the picture or pattern of reversed connections (polarity): (A) in both deflection coils, (B) vertical coils only, and (C) horizontal coils only.

Direction of Deflection

Since the vertical forward trace has been described as being in the downward direction, then the vertical retrace, or the return of the beam, is from the bottom to the top of the screen. Similarly, the forward horizontal trace is the advance of the beam from the left-hand edge of the tube to the right-hand edge, and the horizontal retrace is the return from the right-hand edge of the screen to the left-hand edge. These are shown in Fig. 6-7.

But in order that these directions of beam advance be correct, it is necessary that the direction of the magnetic fields created around the deflection coils by the respective sweep currents also be correct. In other words, polarity must be correct. Polarity is controllable in two ways: by the connections made to the yoke windings, and by the direction of winding of the coils. Since all TV receiver picture tubes are operated in similar manner, all deflection coils are assumed to be wound in the same direction. Regardless, this does not preclude the possibility of wrong connections or even reversed windings. This will not be evident

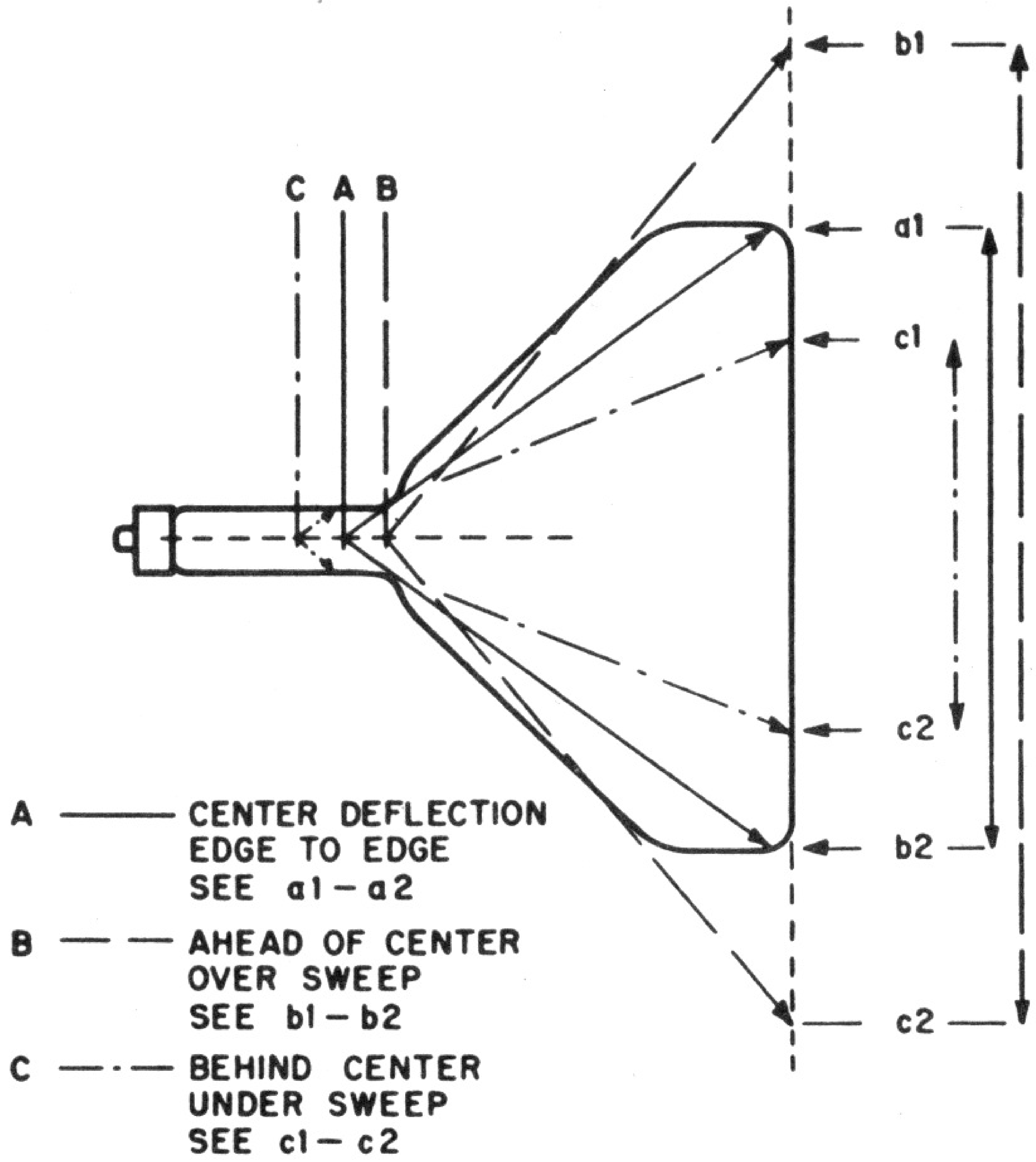

Fig. 6-9. Illustration of picture-tube deflection angle.

in the unshaded raster but will be instantly noticeable when picture information is applied because the picture will be reversed. Examples of incorrect polarity in both vertical and horizontal deflection coils are shown in Fig. 6-8 (A), (B), and (C) respectively.

Radial movement of the complete raster (therefore picture) can be made by *rotating* the position of the deflecting yoke around the neck of the tube. Holes in the mounting bracket provide for this.

Center of Deflection

An extremely important consideration in the design and construction of a deflection yoke and its application to an electromagnetically deflected picture tube is the center of deflection. The deflection of the electron beam in the picture tube theoretically originates at the center of the deflecting field created by the sweep currents in the yoke windings. The location of this *center point* determines if the electron beam will be deflected to the limits of the screen with normal sweep currents present in the coil (and all other electrical conditions normal), or if it will be deflected beyond the limits of the screen, or not reach the edge limits of the screen. These conditions are illustrated in Fig. 6-9.

The magnitude of the deflection controlled in this fashion has a great bearing on the dimensions of the raster and on the final picture –

on whether or not the complete raster (or picture) will appear on the screen. For example, if the center of deflection of the yoke is as at (A) in Fig. 6-9 (this being the correct location relative to the position of the beam and the flare of the tube), the beam will sweep to the edge limits of the screen.

But if the center of deflection is as shown at (B) in Fig. 6-9 (that is, ahead of the proper point), the deflection will overshoot the edge limits of the screen, and as seen in the illustration, the limits of the picture will not be visible. Thus a goodly portion of the picture may be lost. While it is possible to reduce the raster and picture dimensions by reducing the horizontal drive and retarding the vertical height controls, it is conceivable that the limits of these control ranges are such as to make it impossible to reduce the sweep currents sufficiently so as to place the entire picture on the screen. Finally, if the center of deflection is behind where it should be, as shown in the exaggerated location of (C) in Fig. 6-9, a substantial portion of the picture will be lost because the walls of the tube will prevent the arrival of the electron beam at the screen surface over certain portions of the sweep cycle. Such conditions are generally referred to as *neck shadow.*

Assuming correct design of the deflection yoke windings, the usual suggestion to locate the front edge of the deflection yoke as close as possible to the end of the tube neck, where the flare begins, is an attempt to locate the center of deflection of the yoke fields at the correct position along the tube neck. In most instances, carelessness in yoke placement causes the condition shown at (C) rather than at (B), and results in neck shadows. This is a serious problem with 90° yokes. The illustra-

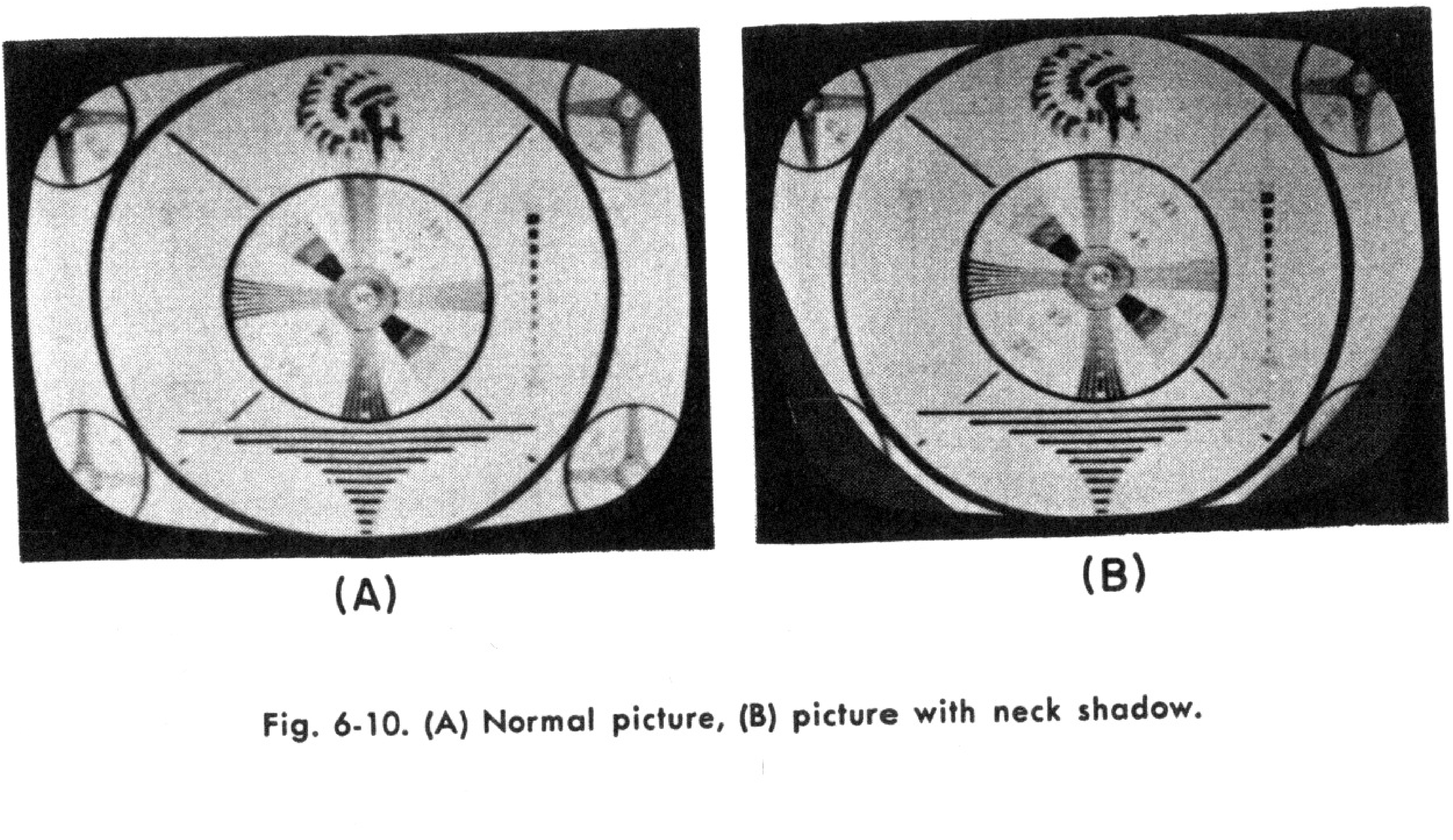
(A) (B)

Fig. 6-10. (A) Normal picture, (B) picture with neck shadow.

tions in Fig. 6-10 indicate the difference in the appearance of a test pattern when the center of deflection is correct (the yoke is correctly placed on the screen) and when the center of deflection is too far behind the flange and neck shadow interferes with the picture.

Deflection Angle

Related to the center of deflection of a deflection yoke is a constant associated with the electromagnetically deflected cathode-ray picture tube. This is the *deflection angle.* It expresses the required angle (see Fig. 6-9) at the center of deflection in order that the beam traverse the limits of the screen with rated normal sweep currents and the normal second anode voltages. It is a function of the design of the picture tube, the velocity of the beam, the dimensions of the screen, and the distance between the screen and the center of deflction.

Deflection angle is expressed in degrees, and cathode-ray picture tube types bear different deflection-angle ratings, such as 42°, 53°, 55°, 65°, 70°, and 90°. All intermediate values are not given here. Deflection yokes likewise bear deflection-angle references. Those which are intended for replacement purposes usually are 53°, 70°, and 90°. It would appear at first glance that, if the deflection angle rating of a yoke corresponds to that of the picture tube, the two can be used together. This is not so. The mere fact that this one requirement is satisfied is not the entire story. Every 70° yoke cannot be used with every 70° picture tube in a receiver. Other design conditions present in the vertical and horizontal sweep-output systems of the particular model of receiver must be also considered. These requirements are created by the design of the vertical and horizontal output transformers.

If a yoke bearing the deflection-angle rating of a picture tube is not available, the best choice (assuming the electrical requirements are satisfied) of yoke is one which has a higher deflection-angle rating than the tube. Of course this must be within reason. A 53° yoke is better for a 42° tube than a 70° yoke; a 70° yoke is preferable for a 65° tube to a 55° yoke, etc. Naturally it is best if the two match, but the above relationship is satisfactory because control of width reduction is easier than width increase.

Electrical Characteristics of Deflection Yokes

Although the deflection yoke is an entity, its utility is controlled by the electrical requirements of the vertical and horizontal deflection systems and by certain specifications of the picture tubes. The latter detail has been discussed under the heading of deflection angle. The designs of the respective output transformers dictate specifications of the vertical and horizontal deflection windings so that they will match properly. It is true that a little more leeway exists in the specifications of the vertical deflection winding than in the horizontal coils because of the lower frequency involved. But even so, there are definite limits on the tolerances of either one.

The deflection coils are the loads on the respective output tubes via the output transformers. Incorrect loading of these transformer secondaries by deflection windings with the wrong constants produce a variety of adverse effects on the operation of the output tubes. Not only does deflection amplitude suffer, but substantial nonlinearity is created. Attempts to correct these conditions can cause other faults, such as overdriving the output tubes, excessive plate current, shortened tube life, and excessive drain on the low-voltage power supply, with a resultant drop in output voltage which can defeat the utility of the receiver.

Horizontal Windings

Broadly speaking, the horizontal deflection windings fall into two categories of inductance and d-c resistance. One is the so-called *high inductance* group and the other is the *low inductance* group. In the low impedance (inductance) group, popular values are 8.3 mh, 10.3 mh, 11 mh, 12.3 mh, and 13.8 mh, whereas in the high impedance group they are 18.5 mh, 20 mh, 24.5 mh, 36 mh, and 50 mh. There are, of course, intermediate values in both of these categories. The higher values of inductance are usual in the direct-drive systems, although not definitely limited in use in this fashion. The lower values will be found in the transformer and autotransformer output coupled arrangements.

For the d-c resistance values associated with these different inductance ratings, there are no set standards. A variable is introduced by the size of wire used for the winding. The over-all d-c resistance range for the so-called low-inductance yokes is from about 9 to 20 ohms, but any attempt to correlate d-c resistance with a-c inductance will not succeed, because different values of inductance will often show like values of d-c resistance. For instance, a 5.7-mh winding will have 9 ohms d-c resistance in one brand of yoke used in a receiver, and an 8.3-mh yoke used in another receiver will present the same 9 ohms. In another instance, a 10.3-mh winding will present 13.5 ohms d-c resistance, whereas a 10-mh winding may present 16 ohms d-c resistance.

It is not possible to use the d-c resistance value of the winding as the basis of deciding if the electrical condition of the yoke winding is good or bad, unless the deviation from the normal rating is substantial. A discrepancy of 10 percent in d-c resistance appears significant on the surface, but it is not extreme since the normal inductance tolerance usually runs plus or minus 5 to 10 percent. Obviously, therefore, the d-c resistance test on a yoke winding is only a secondary test; the manner of performance, that is, the waveform of the voltage across the yoke end of the current through the winding and the appearance of the raster have much greater value in troubleshooting.

Vertical Windings

The vertical deflection windings present much more inductance than the horizontal windings, with one exception. The usual range is from 30 to 50 mh, with such values as 36 mh, 41.5 mh, and 50 mh being most frequently encountered. Other commonly used values are 30, 35, 42, 44, and 47 mh.

The exception is the very low inductance-type vertical winding, which presents about 3 mh inductance. It is used in some direct-drive output circuits.

Concerning the d-c resistance on the vertical windings, the general range is from about 45 to 72 ohms. As can be seen, the d-c ohmic value of the vertical winding is substantially higher than for the horizontal deflection windings.

As in the case of the horizontal deflection windings, the d-c resistance of vertical deflection coils cannot be used as the final means of deciding if a yoke winding is defective, unless the discrepancy between the rated and measured values is substantial. The wire size has a major bearing on the d-c ohmic value for any coil, and on many occasions a wide variety of resistance values may be encountered for the same inductance yoke. For example, some receiver manufacturers use a 47-mh vertical deflection winding obtained from more than one yoke manufacturer. These windings are rated at from 64 to 72 ohms d-c resistance, and any value within this range may be experienced in these receivers, depending on which yoke producer's product is in the specific receiver. A 72-ohm winding is almost 13 percent high relative to a 64-ohm coil.

Even in the case of the popular 50-mh winding, which in very many cases is rated at 68 ohms d-c resistance, some receivers use the same inductance-rated coil, but with a d-c resistance of only 55 ohms—a difference of almost 20 percent. We can, however, generalize by saying that vertical deflection windings bearing inductance ratings between 30 and 44 mh, usually have d-c resistance ratings between 45 and 49 ohms, but it must be understood that there are exceptions, such as the 41.5- and 42-mh windings rated at 56 ohms. The special 3-mh vertical coils have d-c resistance ratings approximating 3 to 3.25 ohms.

Voltage Breakdown Ratings

Another important electrical rating of the deflection windings of a deflection yoke relates to the insulation used in the construction of the device. This rating of voltage breakdown is not so important as the inductance (and d-c resistance) constants for each windings, but it does determine the suitability of the yoke relative to its operating life.

The alternating current in the yoke windings during operation is substantial. It may approximate from 300 to 500 ma in the vertical windings and may be 1 amp or more in the horizontal windings. The presence of this current in the rather high ambient temperature found in television receivers results in the development of high temperatures in the deflection yoke. When the retrace occurs and the high voltage pulse is generated, especially in the horizontal deflection coils, it is imperative that the insulation used in the yoke windings be such as to withstand the potentials present and prevent voltage breakdown at the operating temperatures.

The receiver manufacturers' specifications for operating temperatures in deflection yokes frequently are from 70° to 100° centigrade. This is rather high and all ordinary insulation is reduced in effectiveness with such increasing temperature.

Whatever may be these voltage breakdown ratings in the original equipments, they should at least be equalled, if they cannot be bettered,

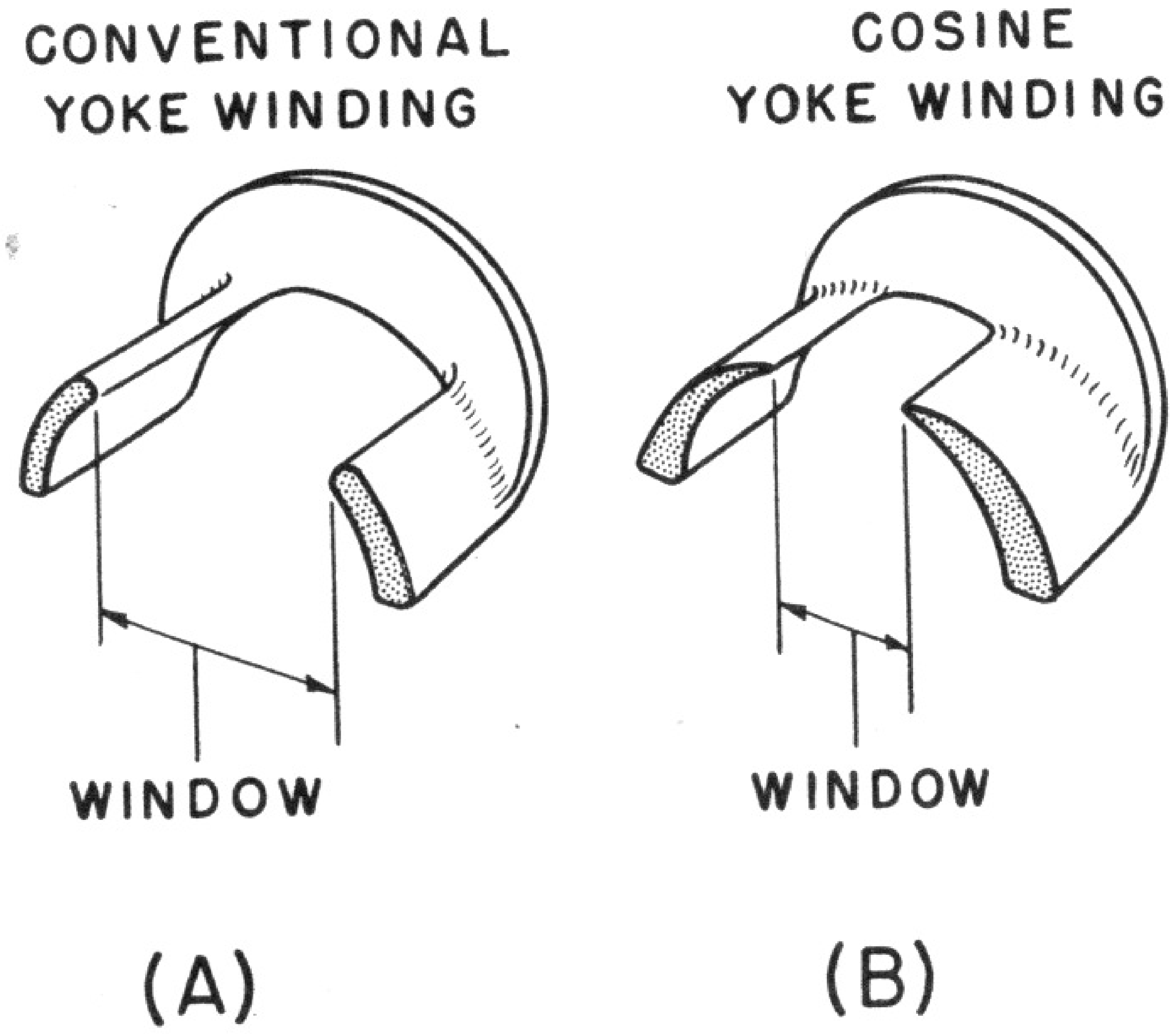

Fig. 6-11. Cross-sections of conventional and cosine windings.

in the replacement equipment. In this respect replacement parts manufacturers should state the voltage breakdown ratings of their components. Original equipment used in receivers should be similarly rated.

Conventional and Cosine Yoke Windings

Deflection yoke windings are generally of two kinds. One, the older variety, is spoken of as the *conventional flat winding* whereas the more modern kinds in use for the past few years are known as *cosine windings.* The difference between the two lies in the distribution of the turns in the coil. The functional difference is in the shape of the electromagnetic field which is created by the sweep currents.

The cross-sections of the conventional and the cosine windings are shown in Fig. 6-11. The turns near the inside of the winding of the cosine yoke are in a thin layer, and pile up to successively increasing thickness as the winding progresses away from the window. As a result of this type of winding arrangement, the distribution of magnetic flux threading through the neck of the picture tube is more uniform than with the conventional yokes. Because of the more uniform field, the focus of the deflected spot at the corners of the raster is considerably improved.

As the electron beam, which has a definite thickness, passes through the less uniform field produced by the conventional yoke, different portions of the beam experience different amounts of deflection force. As a result, an elongated spot is produced at the raster edges that results in an out-of-focus condition. When the beam travels through the more uniform field produced by the cosine-wound yoke, uniform deflection of all parts of the beam occurs and a minimum of deflection defocusing occurs.

A comparison of the end-on views of the two kinds of deflection coil windings can be made in Fig. 6-12. Note that the cosine distribution is designed into both the vertical and horizontal deflection coils, but in different amounts. That is so because the deflection components of both magnetic fields are not the same, due to the raster being wider than it is high. The size of the window in both horizontal and vertical coil assemblies affects the over-all distribution and hence the spot focusing in the corners of the picture.

The cosine distribution curve is a design detail and is of interest to a service technician only to the extent that a cosine distribution yoke must be replaced by a similar one, if performance comparable to that of the original component is to be attained. This means that any reference

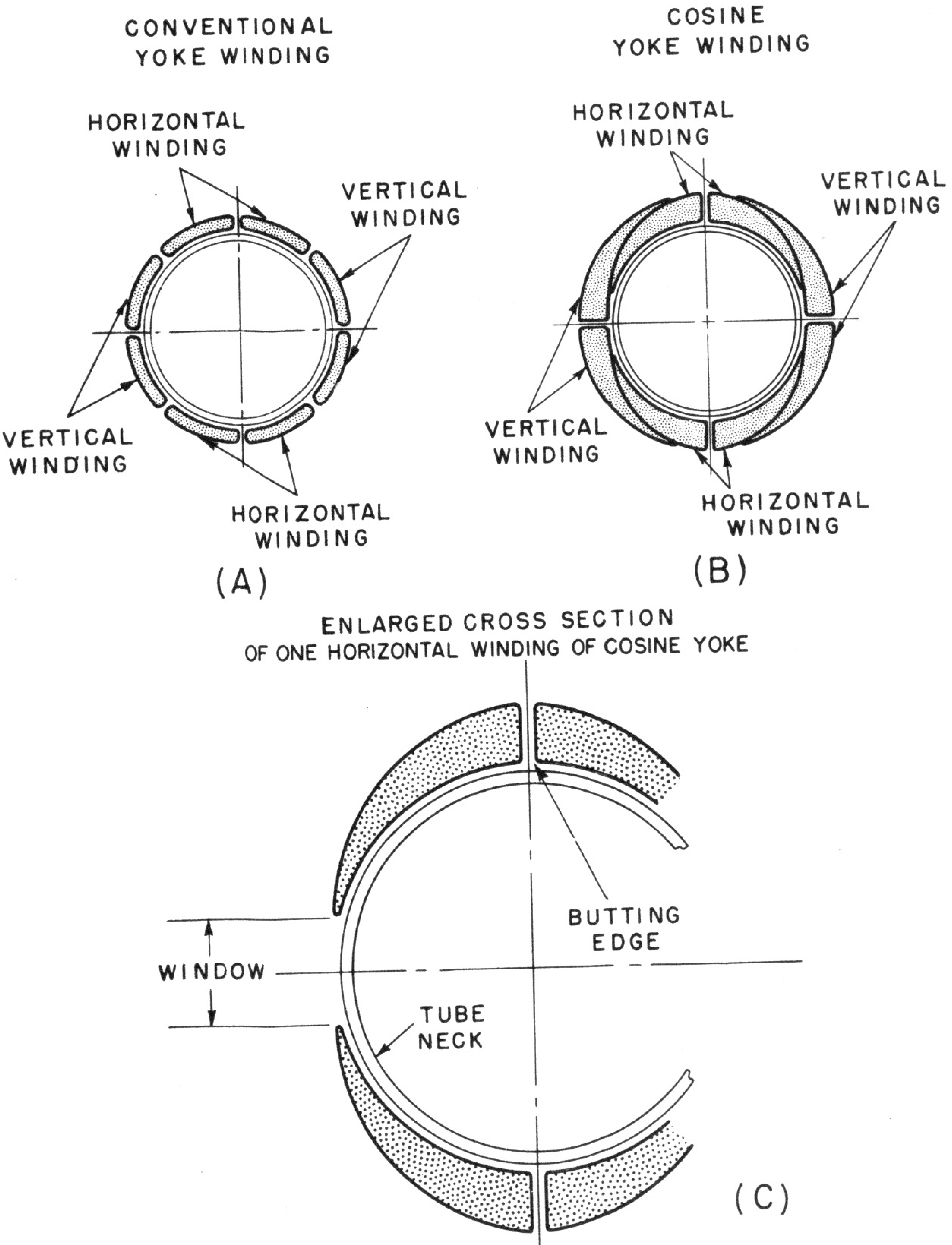

Fig. 6-12. End-on views showing comparison between conventional and cosine-type yokes.

to the winding distribution given in service literature demands compliance when replacing.

Some yoke windings are declared to be *cosine squared* in character, which means that the winding thickness increases faster than in the normal cosine yoke. In general, a cosine-wound yoke can be distinguished from the conventional style yoke by inspecting the size of the window. Cosine yokes have narrow windows. This is natural since the winding starts nearer the center line of the yoke assembly, and thus has farther to spread while increasing its thickness. The horizontal winding window can be readily seen, since this winding is on the inside of the yoke and lies along the neck of the tube.

Finally, when contemplating replacement of a flat-wound yoke with a cosine yoke, note that the cosine yokes may have higher horizontal winding inductance than conventional design. Replacement might result in poor performance and probably show ringing in the picture. Another condition to watch out for is whether the shape of the raster has been changed, since better corner focus may have been obtained at the expense of pincushioning of the raster. Some cosine yokes produce pincushioning that must be removed by placing small permanent magnets (held by brackets) around the neck of the picture tube. These anti-pincushioning magnets must be readjusted when making a replacement. A cosine yoke with such magnets cannot be used with metal picture tubes since the cone may become permanently magnetized and thus distort the raster.

Deflection Yoke Circuits

The circuitry of the coils in the deflection yoke used in television receivers is relatively simple. The conventional circuit symbolization of the two sets of deflection coils was shown in Fig. 6-1, but is repeated in Fig. 6-13 with some slight elaborations necessitated by the discussion which follows.

In Fig. 6-1, attention is called to the two resistors R1 and R2 shunting the vertical deflection coils, and the capacitor C which shunts one of the horizontal deflection windings. Usually this capacitor is connected across that horizontal winding whose top terminal is the "high" side of the horizontal deflection coils. The general function of these added circuit elements can be placed under the general heading of anti-ringing methods.

Anti-Ringing Methods

The generation of a transient voltage or the introduction of a transient voltage into a circuit tends to shock-excite the system and give rise to oscillatory currents; that is, other transients. Hence, one circuit can shock-excite another. The more pronounced the inductive properties of a circuit relative to its resistance, the more susceptible is it to shock-excitation. Thus, the horizontal deflection system is more prone to shock excitation than the vertical deflection system, but both can suffer from it. The retrace period in both can affect the performance of the other; that is, the linearity of the sweep currents which are present in each.

The Vertical Deflection Coils. The resistors R1 and R2 seen connected across the vertical deflection coils in Fig. 6-1 are damping resistors with multiple functions. They are intended to damp possible oscillations which may be generated in the vertical deflection system during the vertical retrace period, for it will be remembered that the vertical deflection coils display a substantial amount of inductive effect to those currents.

These same resistors also serve to damp any transients that may be generated in the vertical system by the horizontal retrace pulses. These pulses are of high-peak value and can be coupled readily into the vertical deflection coils. Although damping action is provided by the vertical output tube when it is carrying current, the use of shunt resistors across the vertical deflection coils is an important additional requirement. The usual values are 560 ohms

The Horizontal Deflection Coils

The oscillations in the horizontal output system frequently are referred to as *ringing,* and their principal frequency is about 70 kc, although higher frequency ringing also prevails because of the higher frequency resonant circuits which are to be found in the components of the system. The net result is that sweep voltage waveforms at many points in the horizontal output system show the presence of "wiggles" riding on top of the principal voltage trace. Examination of the resulting sweep-current waveforms would show the same deformation in the linearity of the trace.

The damper tube in the horizontal output system tends to minimize some of the ringing, as was described in Chapter 4, but it does not do a complete job on all parts of the circuit, especially in the horizontal deflection windings. Here it is necessary to use supplementary means, such as balancing capacitor across one of the horizontal windings. Sometimes the balancing system consists of a resistor in series with a capacitor.

The need for the balancing capacitor across one horizontal deflection coil stems from the fact that capacity of each horizontal vertical coil to each other forms a sort of bridge that is somewhat unbalanced because one of each of the deflection system coils is at ground potential. This can result in coupling between the vertical deflection coils to the horizontal deflection coil. In order to equalize the effect of vertical coil capacitance to the "high" potential horizontal deflection winding, a capacitance is shunted across this coil.

The value of this capacitance is fairly critical (more so in some cases than in others). Its capacitance value usually is between 40 and 70 mmf, and different windings call for different values. In fact one receiver manufacturer arranges a trimmer at this point in the receiver in order to afford the best possible adjustment and most effective cancellation. Identically numbered deflection yokes may require different values of horizontal deflection-winding balancing capacitance. The specific values used in different yokes are shown on service schematics for each receiver.

It is a good idea to try values between 40 and 70 mmf in steps of 2 mmf. As a rule, high-voltage mica and ceramic capacitors are used here, the working voltage ratings being between 1500 and 3000 volts. The higher the inductance of the horizontal deflection winding, the higher should be the voltage rating of the balancing capacitor, even though only one-half of the total generated pulse appears across the capacitor. Because the requirement is critical and because the temperature rise in a deflection yoke is substantial, it is not uncommon to find negative temperature-coefficient ceramic capacitors used here. As a rule these are of the N750 type. This temperature coefficient seems to function effectively to keep the capacitance constant with rising temperature. The conventional type of capacitor has a positive temperature coefficient and the shunt capacitance would increase with rising temperature, thus nullifying the benefits of having the capacitor connected across the winding.

Examples of sweep voltage waveforms and current waveforms for the horizontal deflection winding when this balancing capacitor is of the wrong value are shown in Fig. 6-13. It is interesting to note the presence of some oscillations in the normal pattern. If these occur during those parts of the forward trace which are blanked out, no impairment of the picture will occur. It is to be noted that Fig. 6-13 discloses an aggravated case. It is entirely possible that excessive ringing may be present in the horizontal sweep current, but only over a portion of the sweep cycle, rather than throughout as shown. The result of the extreme ringing in the picture is shown in Fig. 6-13 (C).

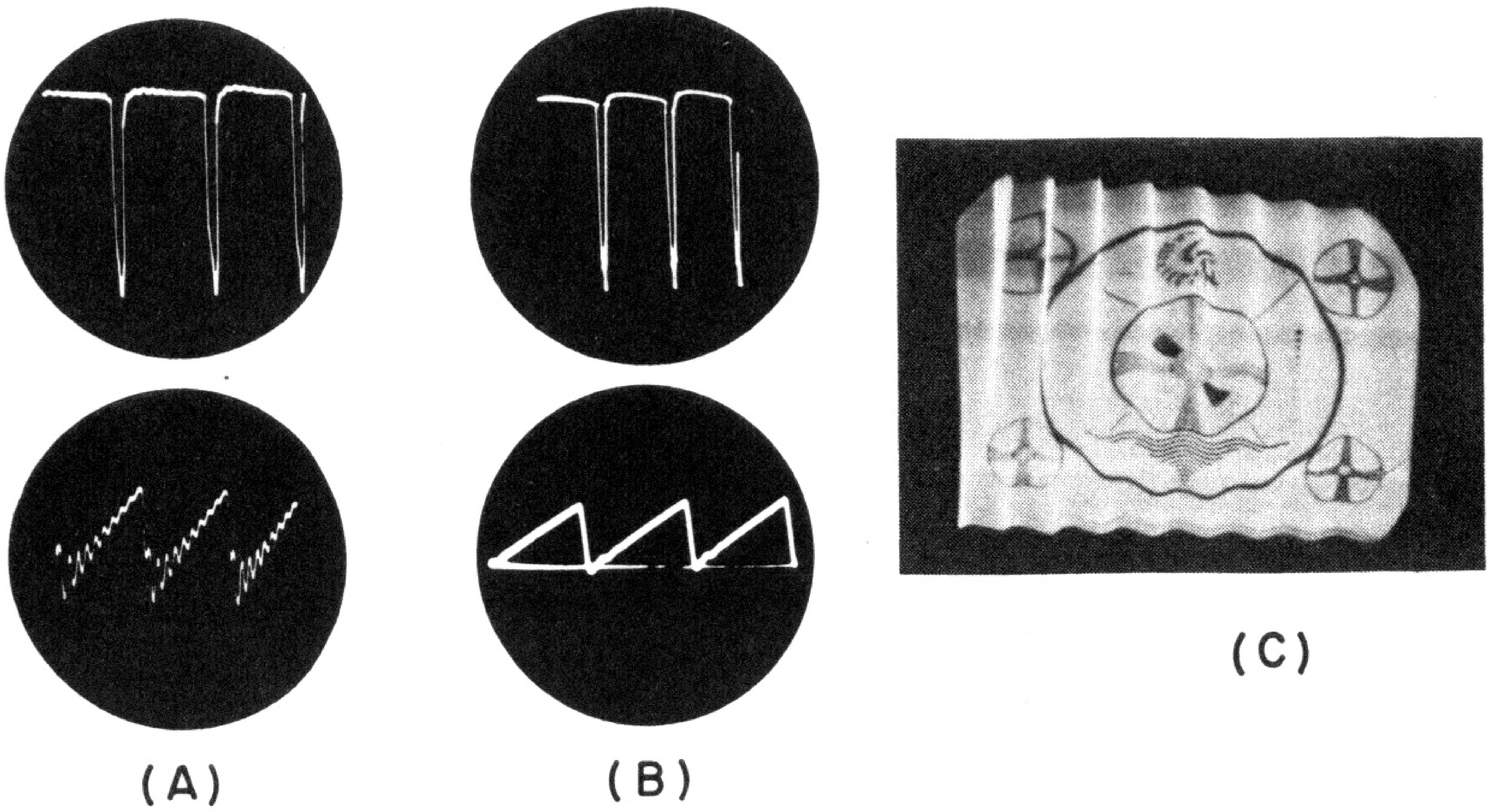

Fig. 6-13. Horizontal deflection winding voltage and current waveforms: (A) when balancing capacitor is defective, and (B) normal conditions; (C) the picture-tube pattern resulting from the defect.

Ringing in picture will appear as lines of different intensity because of the different periods of excitation of the screen material by the impinging electron beam.

Another method of minimizing the presence of spurious wiggles on the horizontal sweep current is by the use of an anti-ringing circuit between the horizontal output transformer and the horizontal deflection winding. It is a series resonant circuit tuned to approximately 70 kc. An inductance of about 150 mh and a capacitance of about 0.047 mf have been used successfully to attenuate the 70-kc oscillations from reaching the horizontal deflection winding.

Another extremely important point relative to the horizontal balancing capacitor is its voltage rating. It is subject to one-half of the peak value of the horizontal retrace pulse and therefore must have a working voltage rating capable of accepting this voltage. Usual ratings of these capacitors are from 1500 to 2500 volts d-c.

Cancellation of these spurious currents has also been improved by reducing the effect of shock-exciting the horizontal deflection windings by the vertical deflection windings. One circuit used in this way consists of connecting the center point of the vertical deflection windings through a small capacitor (200 to 300 $\mu\mu$f and suitable voltage rating) to the bottom side of the horizontal deflection winding.

CHAPTER 7

MECHANICAL FEATURES OF SWEEP OUTPUT SYSTEM COMPONENTS

Knowledge of the mechanical features of the components used in the vertical and horizontal output systems are valuable in acquiring familiarity with the systems. Very seldom, if ever, can anything be done to correct defects in the components themselves, and the usual remedy is replacement. On occasion, some manufacturers of TV receivers have recommended that the cores of horizontal output transformers be removed from a defective unit and reused with new coils. The reason for the suggestion was shortage of core materials, but the practice is discouraged because the reassembly of such a device is anything but simple, if a really good job is to be done. Nevertheless some few details concerning the mechanical features of such devices may be of interest to the reader.

The design of these components has passed through numerous stages since the advent of television on a large scale. The units used in very early TV receiver are of little interest, hence the details given in this chapter apply to present-day devices. Every form of physical design in use cannot be described. Minor variations will be found in commercial units, each resulting from innovation in design in order to effect some economy or electrical improvement. We shall not describe each of these, but rather will discuss the general design most frequently used.

The Iron-Core Horizontal Output Transformer

Mechanically, the output transformer assembly has four main parts:

1. The coil assembly.
2. The iron core assembly.
3. The filament winding loops.
4. The mounting, spacing and terminal accessories.

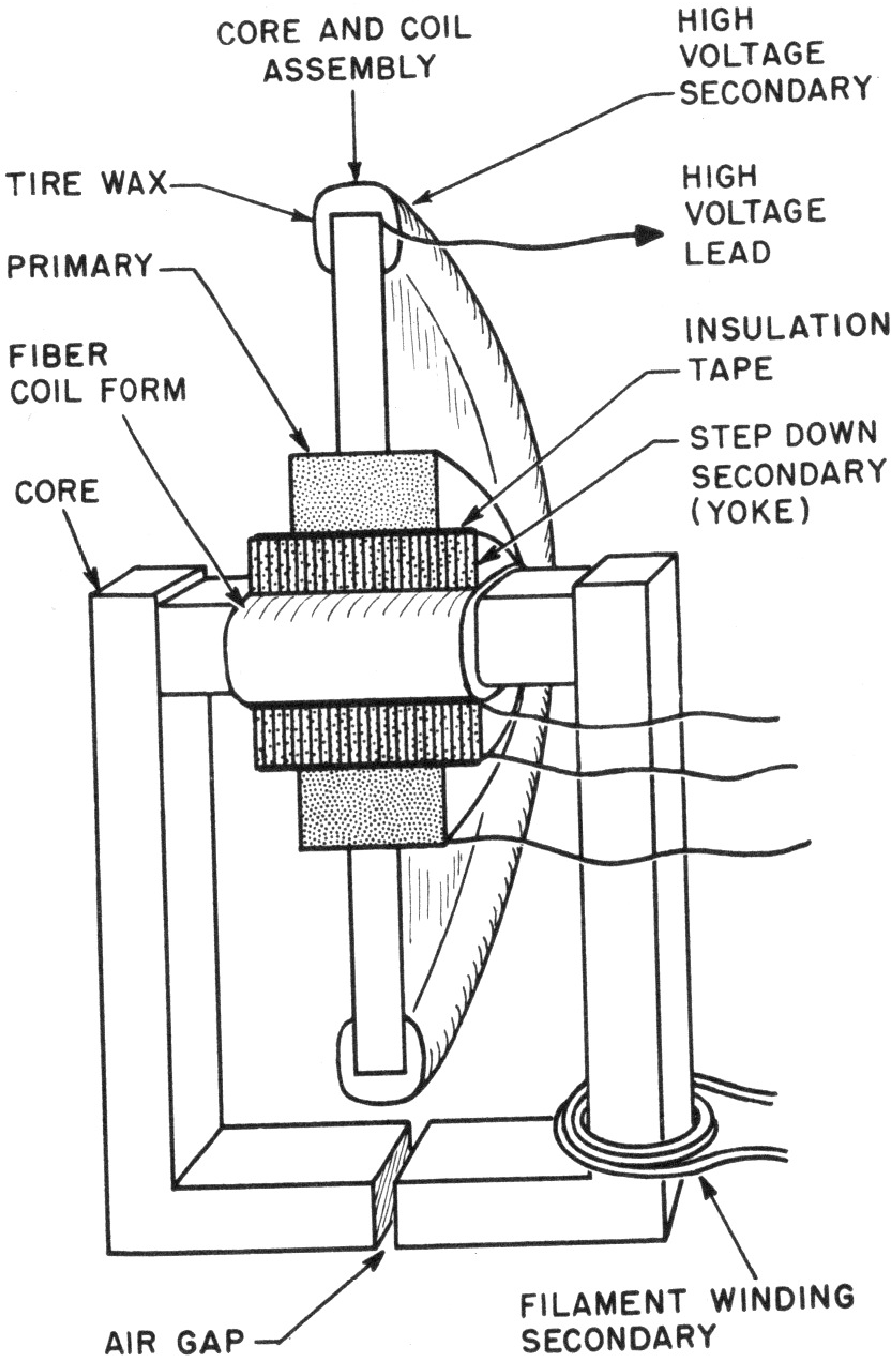

Fig. 7-1. Winding construction of horizontal output transformer.

Regardless of the electrical winding groups in an output transformer the main coil assembly consists of three separate layer or universal wound coils. Some of these may have taps (particularly the primary and yoke secondary), but in winding the individual sections there are usually only three operations, using a different size or type of wire in each. The winding operator may stop during the piling up of layers of turns to bring out taps, but she always ends up with three separate operations.

The unit is wound on a fiber tubular coil form of suitable diameter to accept an iron core through its center (see Fig. 7-1). The step-down yoke secondary is first wound on this form. This winding uses the largest size wire since it carries the heaviest currents. It is the longest winding, extending along the center portion of the core to within a safe distance (to prevent voltage breakdown) of the side pieces of the core. Leads from the start, finish, and taps on the winding are brought out directly to the terminal board.

Directly over the secondary winding is wound the primary, also a universal winding, but with smaller wire and extending only part way along (not completely covering) the secondary winding. This winding may have a layer of insulating tape between its bottom layers and the outside of the secondary since in the transformer-coupled type there may be a d-c as well as an a-c potential between these windings. The high side of this winding is connected to the driver plate and is led directly to the terminal board. Since this lead and terminal is subject to several thousand volts, proper corona-prevention steps are taken by *doping* up exposed fine wire sections and using a corona button on the terminal itself.

Care is taken in proportioning the length and diameter of both primary and secondary windings so that a maximum of coupling exists between these windings; best efficiency is obtained with high coupling coefficient. At the same time, universal winding construction is used in most designs to obtain as high a *Q* (low losses) and as low a distributed capacity as possible. Some early designs were successful in using layer-wound primaries and secondaries, but modern high efficiency coils all use universal type winding.

The High-Voltage Winding

An output transformer high-voltage secondary must meet a number of requirements for correct operation of the output system.

1. It must have enough turns to produce an efficient 3:1 or 4:1 step-up ratio.
2. It must be of high *Q* and low distributed capacity to keep the whole system resonant at 70 kc for proper retrace and to prevent foldover.
3. It must have proper impregnation and corona-prevention treatment and be of the right size to fit within the transformer core structure without danger from voltage breakdown.

A. It must be closely coupled to the yoke winding so that self-resonance effects and ringing are minimized by the damper diode.

To attain these characteristics, the high-voltage secondary is wound directly over the primary. Being an autotransformer section of winding it need have no insulation between the windings, although some manufacturers wind this assembly on a separate form and slip it over the primary in a separate operation. This is an economy of manufacturing

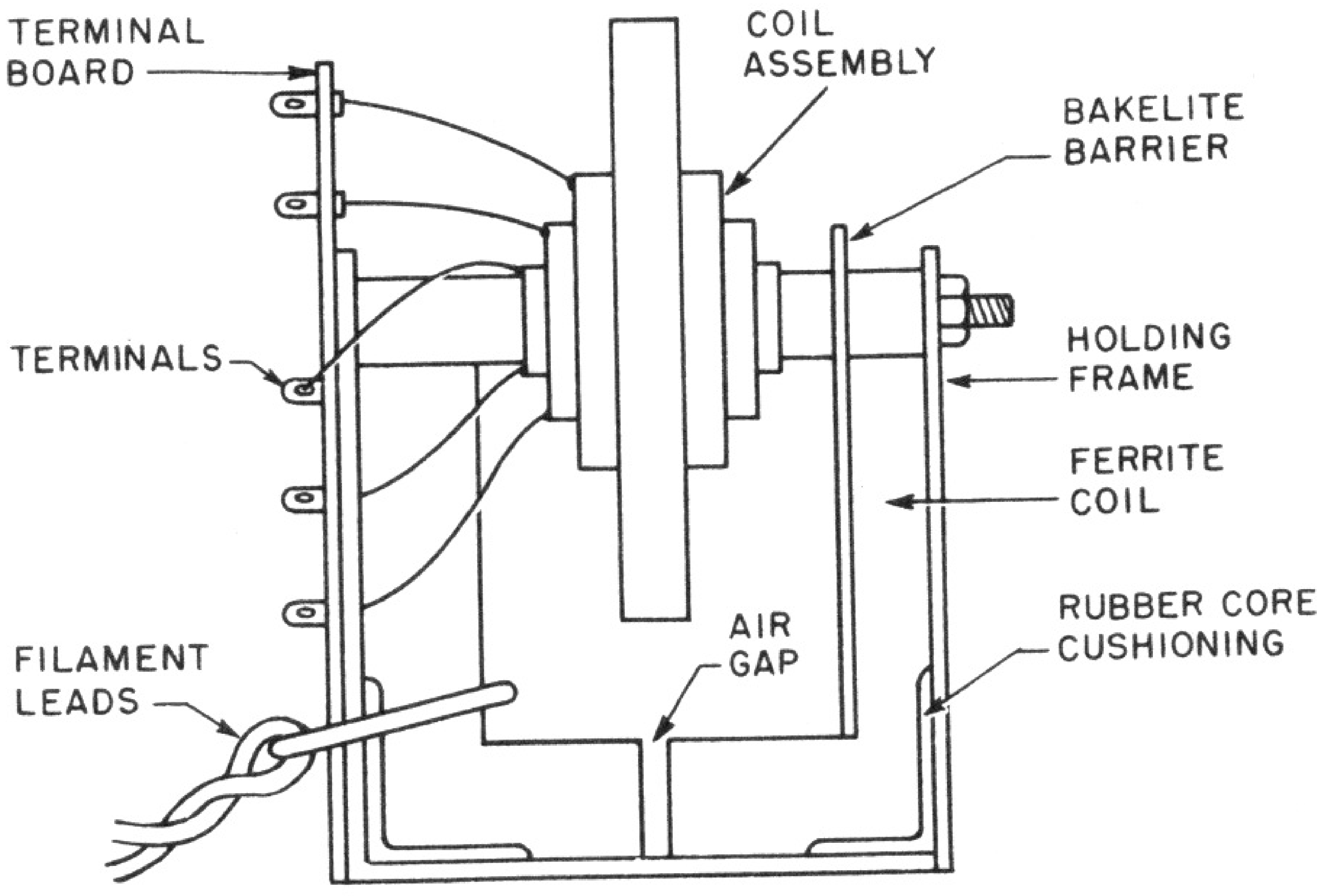

Fig. 7-2. Typical horizontal transformer assembly.

procedure which eliminates the need to change wire size when going from primary to high voltage winding.

This winding is narrower than either primary or secondary windings in order to keep good *Q*. It is of fine wire since it carries only a few tenths of a milliampere of picture tube beam current. It extends out to a fair diameter beyond the primary and yet not far enough to be so near the core structure that voltage breakdown is risked.

The whole assembly, including primary and secondary windings, is impregnated in wax and the high-voltage section has applied around

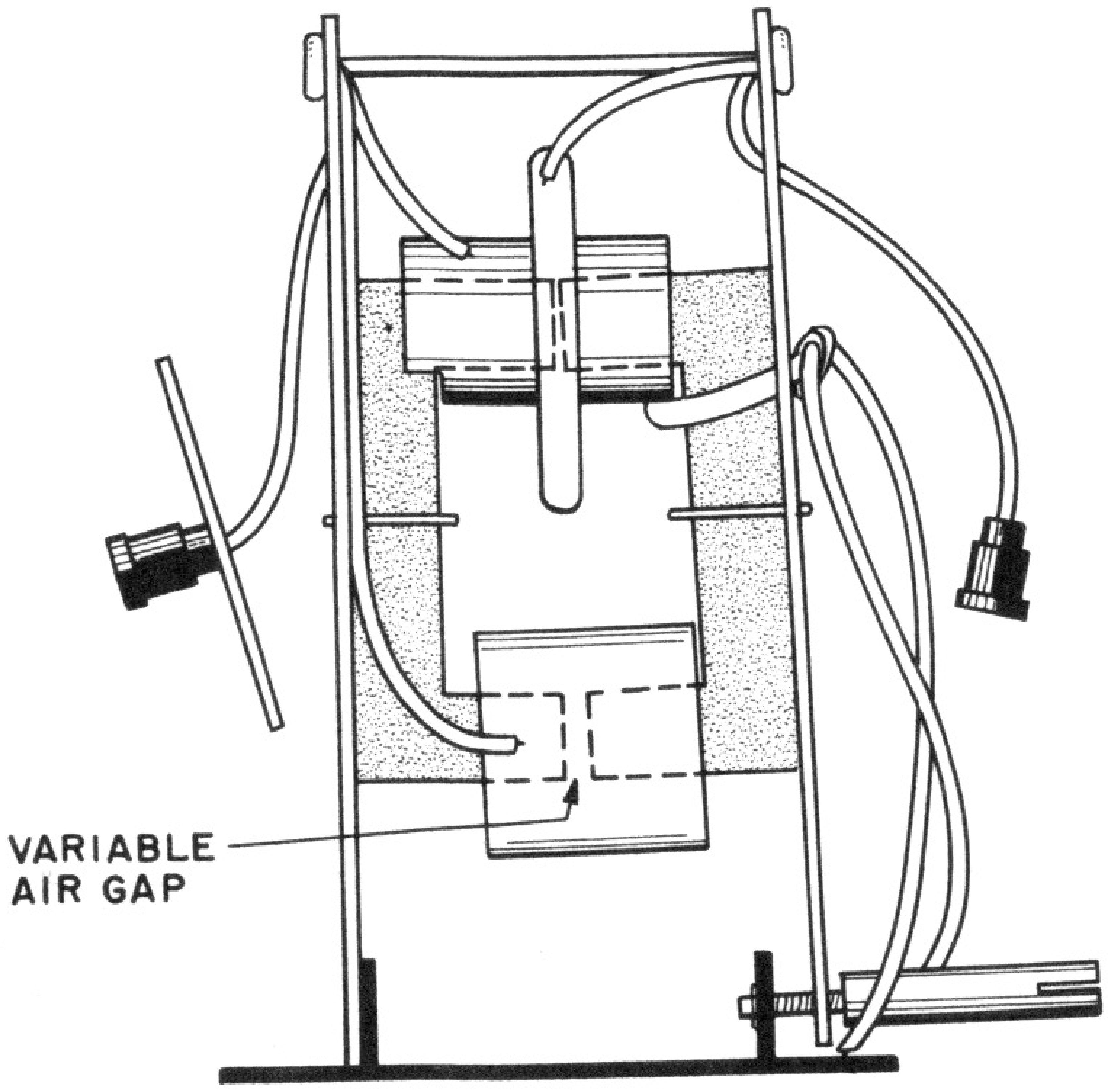

Fig. 7-3. Variable air-gap type of transformer.

its periphery a "tire" of suitable smooth-surface wax to eliminate corona breakdown.

The Core

The core assembly of the basic transformer serves as a support for the coil assembly (as shown in Fig. 7-2) and as a magnetic path for the flux that links the various coils. There are several types of this unit depending on the age of the design, but in general, the core is designed to produce a maximum of flux linkages with a minimum of core losses.

In Fig. 7-2 is shown a conventional modern ferrite core with an air-gap consisting of several mils of insulating "fish" paper. This serves to prevent flux saturation of the core due to steady d-c currents in the transformer primary.

A view of the horizontal output transformer using the variable air-gap type of construction is shown in Fig. 7-3. Variations in core construction and in the type of core material are to be expected. For that matter, variations in the over-all appearance of the transformer will also be found. One such example is given in Fig. 7-4, although the organization of the windings is like that shown in Fig. 7-1.

The Filament Wires

The filament winding loops, which serve the high voltage rectifier, are generally wound around the transformer core and held in place by insulating tape or by being tied in a knot around the core material and a support on the terminal board. Special high-voltage insulation is used

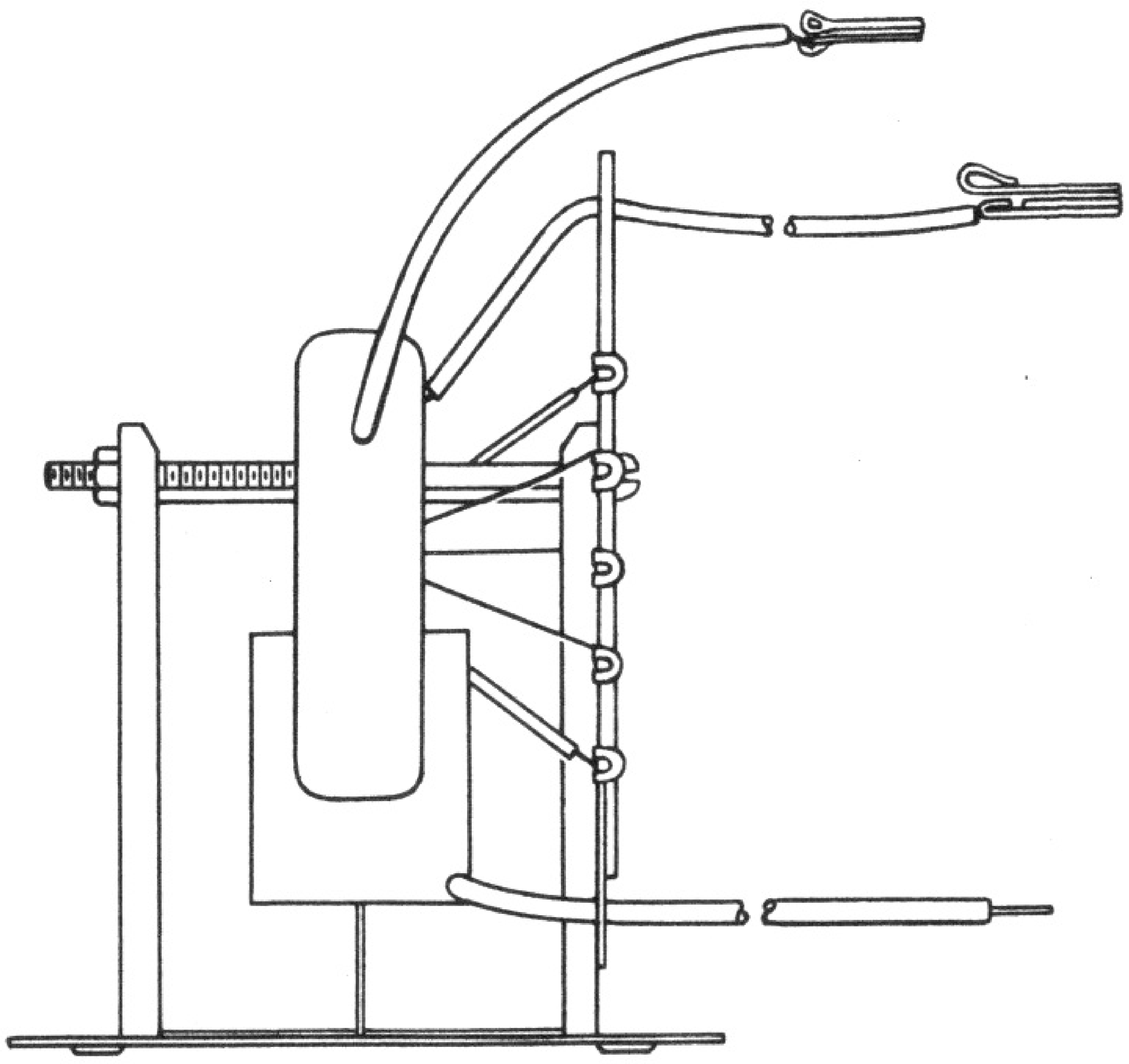

Fig. 7-4. Variation of horizontal output transformer.

for the covering of these wires and it is very important that this insulation not be scraped or broken, especially near grounded objects. The leads are usually arranged to go directly to the high-voltage rectifier filament terminals on the socket, and the leads are kept as short as possible.

Sometimes the high-voltage rectifier filament leads contain a fixed value of resistance necessary to keep the voltage applied to the filament at the proper value. It is best practice to see that the filament loop is firmly in position around the transformer core, and also that the location of the loop is as far removed from grounded shields or shield walls as is possible, consistent with the construction of the high-voltage housing. It is permissible to turn these loops around the core if it means greater separation between the filament wires and the sidewalls of the high-voltage housing. The filament wires should not be pinched between the core or the terminal board and the shield wall, and should not be brought to terminals on the mounting board.

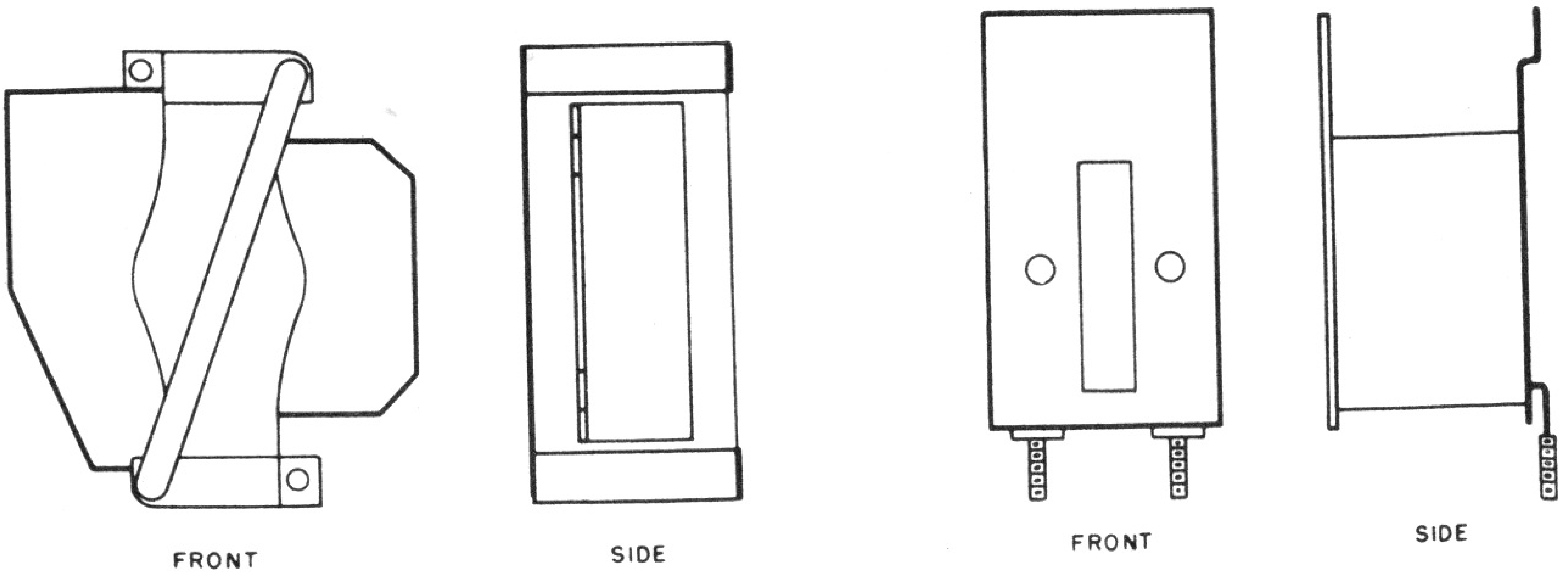

Fig. 7-5. Front and side views of horizontal output transformers.

The Terminal Boards

Several front and side views of horizontal output transformers are shown in outline form in Fig. 7-5. They illustrate some of the many varieties of shapes of these units and also the mounting arrangements. The latter are generally classified as either horizontal, vertical, or side mounting, depending on the location of the mounting brackets or studs.

The shape of the terminal boards means very little, one being as usable as another, provided that the over-all physical dimensions of the transformer (that is, height, width and depth, as well as the mounting arrangements) permit its use. Terminal numbers are usually stamped on the front of the terminal board or on the back, although the former is the more general practice. These terminal numbers on original equipments correspond with the numbers shown on schematics, but will not necessarily be true on replacement units even if the organization of the windings is identical. Whether such correspondence exists is determined by the attitude of the replacement parts manufacturer, who may elect to conform with the numbering on one popular brand of original equipment, or may decide on his own numbering because it may suit the greatest number of applications.

Sometimes the numbering on a replacement transformer consists of more numbers than are to be found on the original equipment for which the replacement may be satisfactory. This condition stems from the desire of the replacement manufacturer to afford greatest flexibility for his unit, and he does not connect the available windings in any one particular manner. Instead he makes the leads from the windings available for a variety of interconnections. In these cases it is necessary to determine which is the output-tube plate winding and the high-voltage winding by means of d-c resistance measurements. As described earlier in this book, the high-voltage winding will be found to present the highest value of d-c resistance and the output-tube plate winding will be next. When these windings have been established, interconnection between terminals sets up the required coil arrangement.

It has become fairly standard practice to number the horizontal output-tube plate connection, and sometimes to mark it P. The high-voltage rectifier plate connection is oftentimes marked No. 3, and the low end of the output tube plate winding is marked No. 1. The above code is more frequently applied to transformer-coupled arrangements than to those using an autotransformer. But even there *it cannot be taken for granted.*

Attention is called to several details concerning the terminals on the terminal boards, especially those which are part of any high-voltage circuit. Usually, button-type terminals are used and it will be noted that the solder is rounded off. In other words, there are no sharp points. These should be rounded off if resoldering is done for some reason. Sharp points in high voltage circuits will cause corona with many unwanted effects. The methods of checking for them are described in Chapter 8.

The direct stretch of winding leads to the terminal board seen in Fig. 7-2 and also the cushioning of the ferrite core are important. Precaution must be taken to avoid "ringing" or rattling of the core. Such vibrations upset the functioning of the entire system by modulating the coil currents with unwanted frequencies which induce additional losses and in general adversely affect performance. Every effort should be made to keep the coils firmly in position on the core, even if wedges must be used between the coils and the core to do so.

The High Voltage Unit

As described in Chapter 4, the high-voltage secondary winding forms the generating source of high a-c voltage to be applied to the rectifier tube. Physically, in commercial designs, the output lead of this winding is placed as close as reasonably possible to the cap of the rectifier tube in the high-voltage compartment located on the receiver chassis. This lead usually employs a stretch of not over 2 or 3 inches.

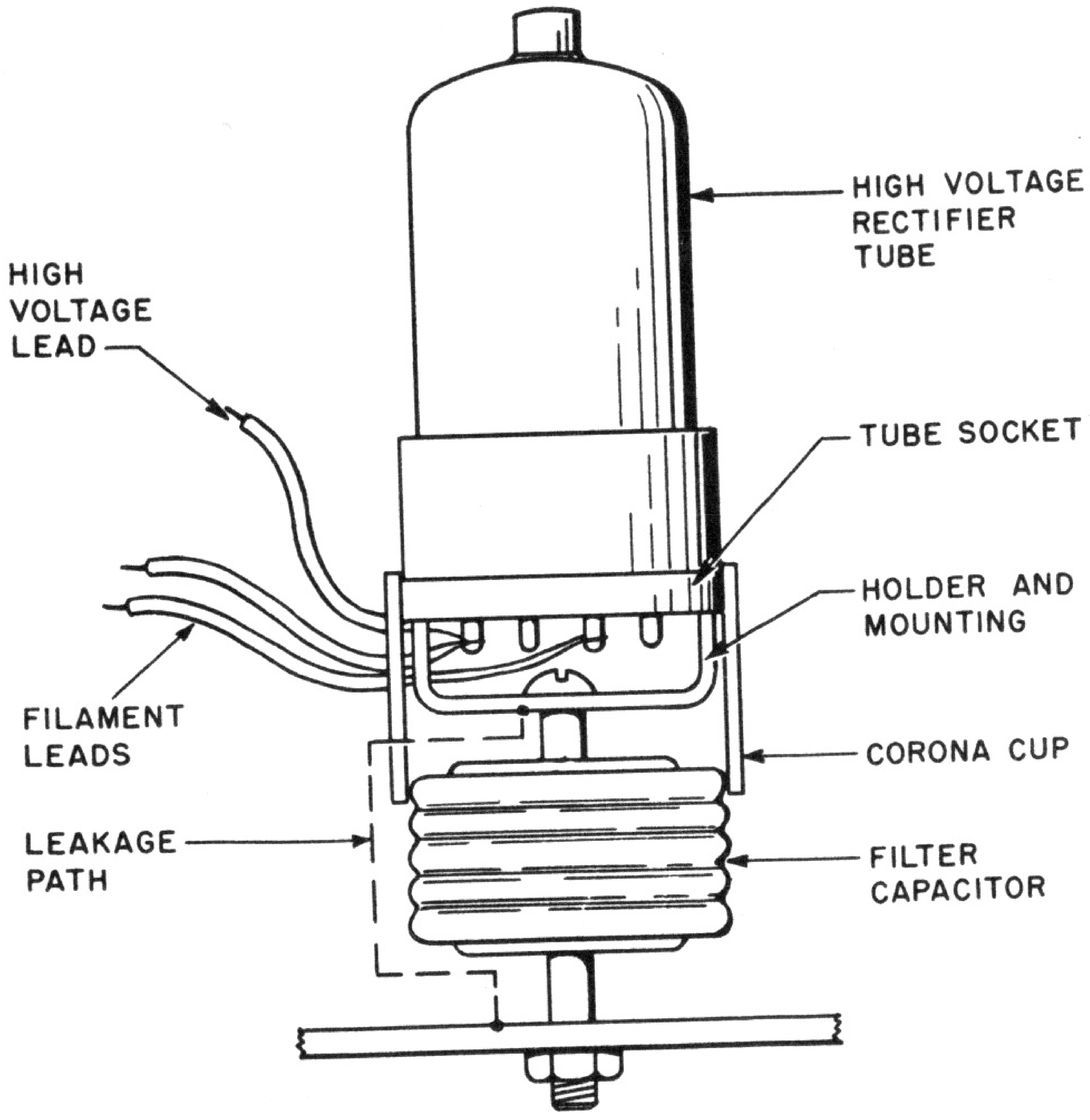

Fig. 7-6. High-voltage rectifier tube and filter capacitor assembly.

High-voltage rectifier tubes are most often part of an assembly made up of the tube socket, its holding bracket or mounting plate, and the high-voltage filter capacitor. Probably 80 percent of modern designs mount the socket and holder plate (if used) directly on the high terminal of the filter capacitor. This is advisable and usually necessary to prevent leakage from high-voltage elements to ground. Over a dirty damp surface, high-voltage discharge must have a path of about 1 inch for each 5000 volts of developed d-c potential. For this reason the conventional high-voltage capacitor uses a bulbous shape with a corrugated surface to make the path to ground as long as possible (see Fig. 7-6). Corona rings and cups of various designs are used on these assemblies and the whole unit mounted within an inch of any part of the high-voltage case.

Commonly used high-voltage rectifier tubes are 1B3, 1X2A, and 1AX4. Two general types are in common use: those similar to the 1B3 in a T-3½ type bulb; and those similar to 1X2's, using a T-3¼ type bulb. Physically, the 1B3 is larger and, electrically, possesses a higher peak inverse voltage rating; it uses slightly more filament current at the usual 1.2 volts.

Wires from the rectifier filament are of large outside diameter, being covered with high-voltage insulation. They should be short and direct to the output transformer; no sharp edges should result from connections to these leads even when the connection is within the corona protective device.

Likewise the high-voltage lead to the second anode of the picture tube should be of high-voltage wire and come directly from within the corona ring.

It is also advisable to include the filter resistor within this structure if possible (barring any voltage divider resistors in the rest of the circuit). This resistor can be supported from a filament connection to a vacant socket prong whence goes the output high-voltage lead. Values of from ½ to 1 megohm are common for this resistor and a 1-watt rating is preferable since the resistor may have several hundred volts across it and leakage problems would ensue if a midget type were employed.

The Damping and Linearity System

This system contains the damper tube and the linearity coil and capacitors. The damper tube is located close by, or usually placed within, the same enclosure as the output transformer for three reasons:

1. Their circuit capacitances to ground are kept low in order to preserve short retrace time.
2. Radiation from the tube itself is minimized; hence the enclosure.
3. The tube carries relatively high d-c and a-c voltages and is enclosed to protect accidental physical contact during adjustment or installation.

In placement for low capacity to ground, the damper diode filament lead capacity is the most important factor. Practically all older sets used a separate highly insulated transformer winding on the power transformer to supply this tube filament. Since this winding capacity to ground constitutes a circuit capacity, unnecessarily long leads to the damper tube filament had to be avoided.

When long transformer leads are unavoidable a separate high insulation, low-capacity filament transformer is used; it has proven most economical in the long run since its failure did not immobilze a whole power transformer as has been the case where the winding is one of those on the main power transformer.

Latest damper diode tubes have a highly insulated cathode which permits the filament to be paralleled with other receiver filaments. This tube type is the 6AX4GT; it overcomes all objections to the separate filament type described above, except that the filament must be well by-passed at the tube socket. If this is not done, high pulse voltages are coupled through cathode to filament capacity to the other filaments in the receiver.

Radiation in damper tube leads may cause interference patterns in the picture, so plate and cathode leads should not be indiscriminately run; such radiation is due to damper circuit resonances into r-f and i-f circuits. One place where this may happen is at the damper tube plate connection when it is connected to B+. This point sometimes must be suitably filtered and lead dress carefully planned.

Linearity coils and capacitors likewise are located near the rest of the output system for reasons of radiation, safety, and low distributed capacity. They are usually included in the high-voltage shielded enclosure, with the linearity adjustment stud protruding through the side of the shield. Besides lead dress, about the only precaution necessary in replacing or repairing these components is that they should have correct voltage rating and the capacity should be within tolerance specified by the set manufacturer. Otherwise the resonance of the linearity circuit will be outside the adjustment limits of the linearity coil.

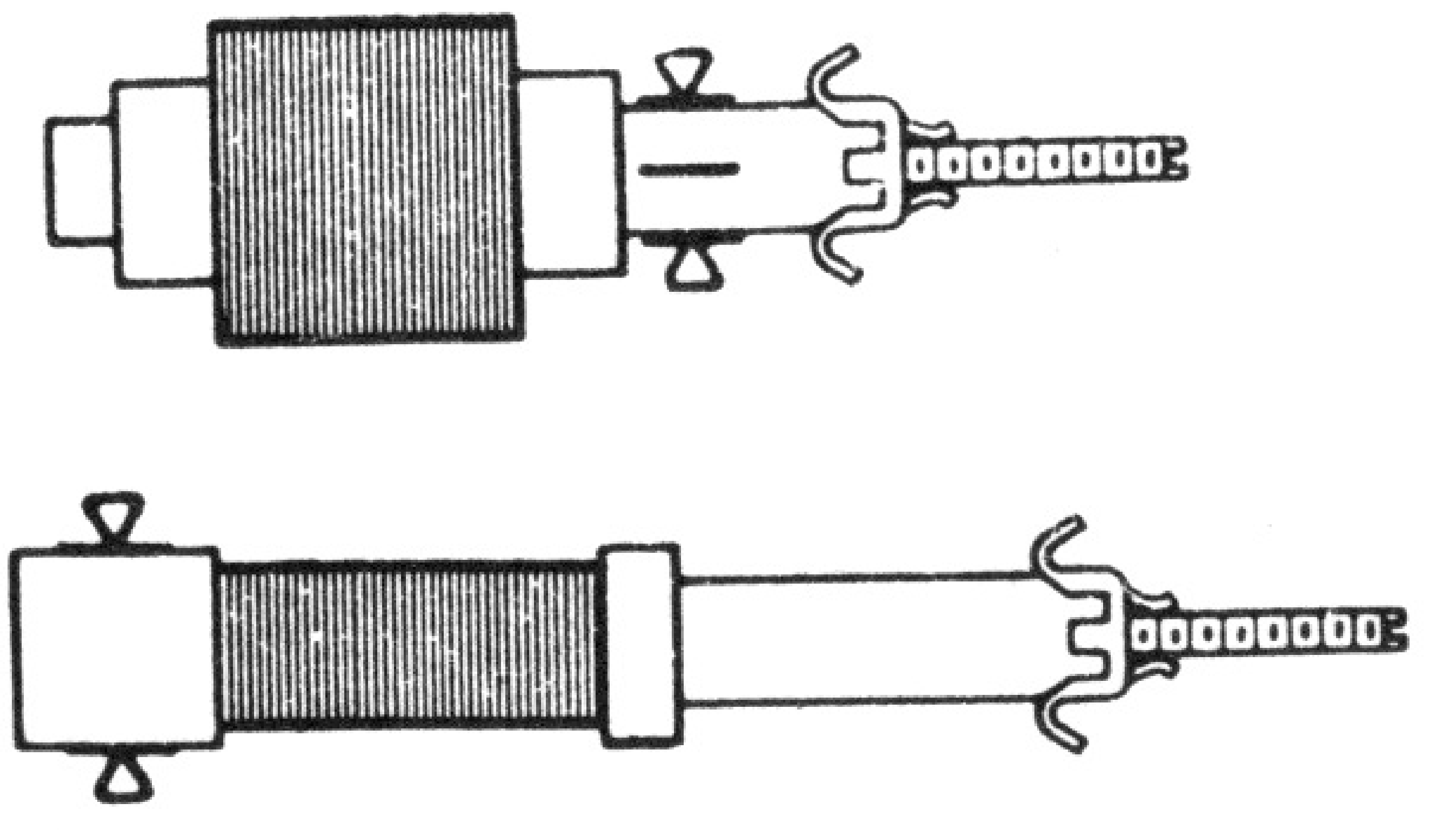

Fig. 7-7. Linearity and width coils.

The usual linearity coil is a layer-wound solenoid, tunable with a threaded slug of powdered iron or ferrite as shown in Fig. 7-7. This figure contains a summary of the various designs of this component in two sizes: (1) the smaller inductance type running from 0.5 mh up to 5 mh, and (2) the larger group ranging from 4 to 25 mh. The only difference between type (1) and type (2) is the number of turns on respective windings: the latter type is usually layer-wound, but has less range of inductance than the single layer solenoid of type (1). These coils carry the plate current of the driver tube, plus peak a-c yoke currents of several hundred milliamperes. The wire is therefore fairly heavy (No. 26 to No. 30) to avoid overheating.

Electrically, these coils are of such size that they resonate with an appropriate capacitor or capacitors at about 15,750 cps. This accounts for the variation in their mean inductance, since some circuits use a different value capacitor; most manufactured designs, however, use capacitors in the range of 0.03 to 0.15 mf, determined of course by the individual circuitry being used.

One other variation occurs in the design of linearity coils; either size range of coil may or may not be tapped. A tapped coil, with the tuning capacitors across each section, provides a step-up action that uses the coil as an autotransformer and thus the resonant current peak for linearity control is achieved. Actually, the net gain of the device is negligible, because a single capacitor likewise appears electrically across the other section of the winding if coupling is sufficiently tight.

Lead dress and placement of linearity coils obviously is carried out with the same care that is applied to the damper tube and its leads.

Width Control Circuits

Width coils are physically similar to linearity coils, as shown in Fig. 7-7. The units are slug-tuned and are mounted in or near the high-voltage compartment with all precautions of lead dress, etc., that is applied to linearity coils. Their current-carrying capacity likewise is an important consideration, especially in the low inductance units.

The Vertical Output Transformers

The vertical output transformer resembles the conventional small audio output transformer. Several views of a typical unit are shown in Fig. 7-8. The usual run of laminations used for the core are E-shaped, and the primary and secondary windings are wound on the center leg.

The outside appearance of the transformer is the same for the conventional two-winding unit and for the autotransformer variety, the

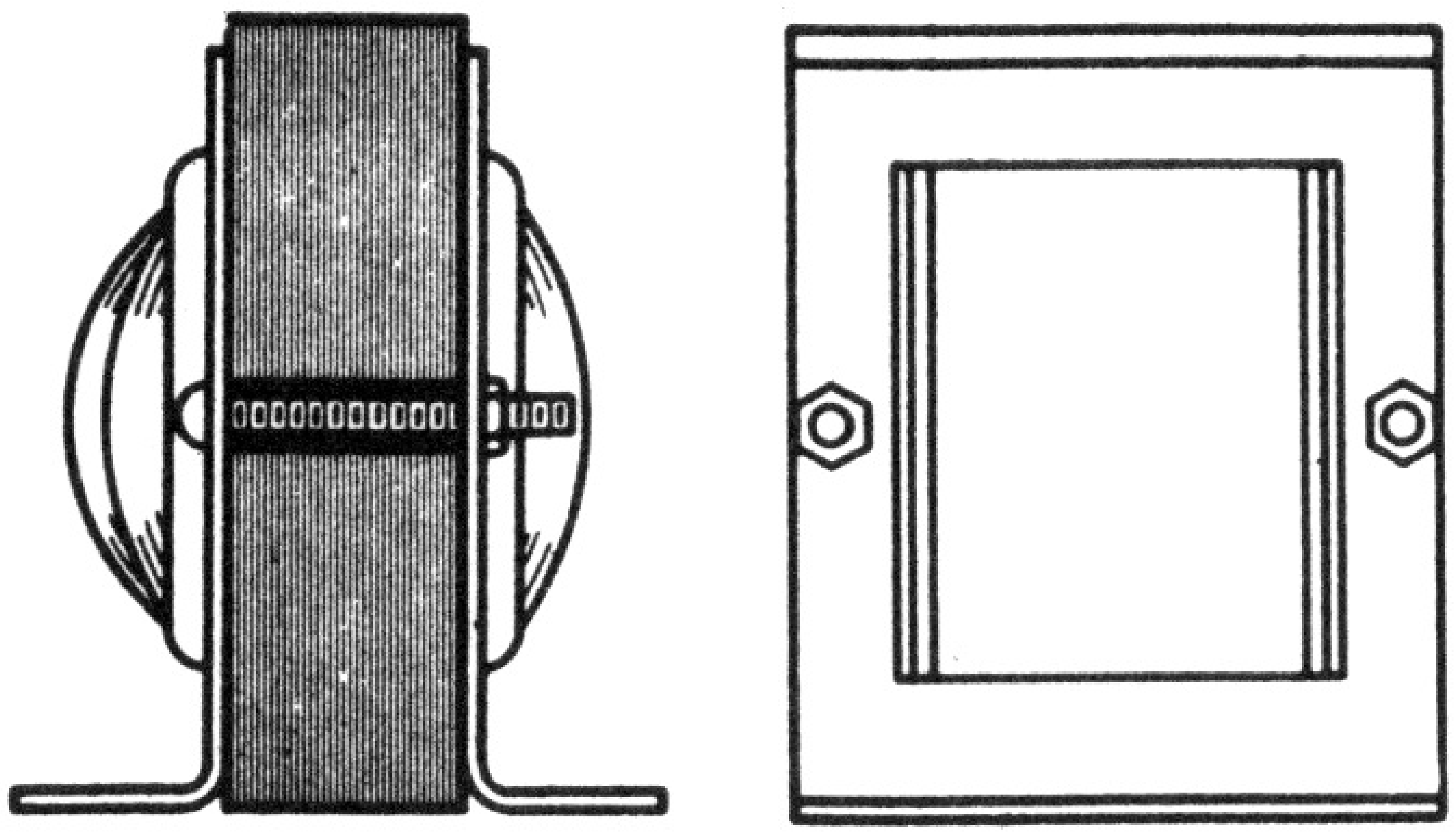

Fig. 7-8. Views of a typical vertical-output transformer.

difference between the two kinds being indicated by the presence of four leads in the first, and three leads in the latter. The color coding of the leads has been fairly well standardized, although not completely. As a rule, the primary lead that connects to the plate of the vertical output tube is color-coded *blue,* and the high side of the secondary is color-coded *green* or *yellow*. The low side of the primary winding is *red* in both the conventional and autotransformer types.

Since the electrical characteristics of these transformers were described in Chapter 3, repetition is unnecessary here. However, it might be well to state that, in view of the substantial rise in voltage across the primary of the transformer during the retrace pulse portion of the input sweep voltage, these transformers too bear a voltage breakdown rating. The specific figure differs for different receiver requirments, but it is not unusual that test voltage ratings between the primary and the core amount to 2500 volts rms at 60 cps, and as high as 2500 volts peak at 400 cps.

The d-c resistance of these transformers depends on the turns ratio and on the d-c resistance of the vertical deflection winding. The transformer secondary resistance always is less than that of the deflection winding connected across it. As a rule the primary resistance is many times the secondary resistance, sometimes as much as several hundred times.

CHAPTER 8

FAULTS IN SWEEP OUTPUT SYSTEMS

In *dealing with faults* in sweep output systems in this chapter, we do not treat details such as blown fuses, bad plate caps, and poorly soldered connections. The nature of this book naturally limits the discussion to matters involving incorrect functioning of components, and operating voltages when significant of a particular defect discussed. It is assumed that the reader will know when and how to make final tests to isolate and verify a guilty component when its guilt has been indicated in the discussion of this chapter. It is also assumed that he will be familiar with any test equipment required to do this.

For example, it is considered unnecessary to emphasize the need for a continuity test on plate circuit components when tests show no plate voltage at the tube, or to do more than suggest that a leaky coupling capacitor may be responsible for a certain symptom. In short, space limitations require that we consider only trouble features peculiar to sweep output circuit function.

General Comments

Faults in sweep output systems show up on the picture tube screen. Even a blank screen (no raster or picture) is a symptom which has meaning. Assuming for the moment that what is seen on the picture tube screen orients thinking concerning the system where the fault is likely to be found, one or more of the following supplementary tests have to be carried out:

1. Examination of the sweep voltage waveform at an appropriate point.
2. Measurement of the sweep voltage amplitude.
3. Measurement of the operating voltages at the output tubes.
4. Measurement of the related circuit or component d-c resistance.

The order of the measurements following the examination of the picture tube screen differs among individuals. It is properly determined by the conclusions resulting from examination of the picture tube screen. In other words, the best order of tests and measurements is not evident until we know what conditions are responsible for which symptoms, or what combination of conditions can produce similar symptoms.

It is important that the kinds of troubles in the two systems which can cause similar symptoms, as well as those which can cause different symptoms, be recognized. Generally, the vertical output system is easier to analyze than the horizontal output system. A few minutes devoted to the examination of the schematic diagram of the receiver can save a great deal of time because:

1. All circuits are not the same; hence the correlation between symptoms and possible defects is not the same.
2. The information gathered from the schematic frequently can change one's mind concerning the suspected component because the number of parts suspected may be decreased by the process of elimination.

It is fortunate that many visible symptoms in both vertical and horizontal output systems do furnish clues as to the fault. A certain amount of investigation is sometimes necessary, however, because defects in *several* components may produce like symptoms. A key measure or observation here and there (as described later) can then prevent much loss of time.

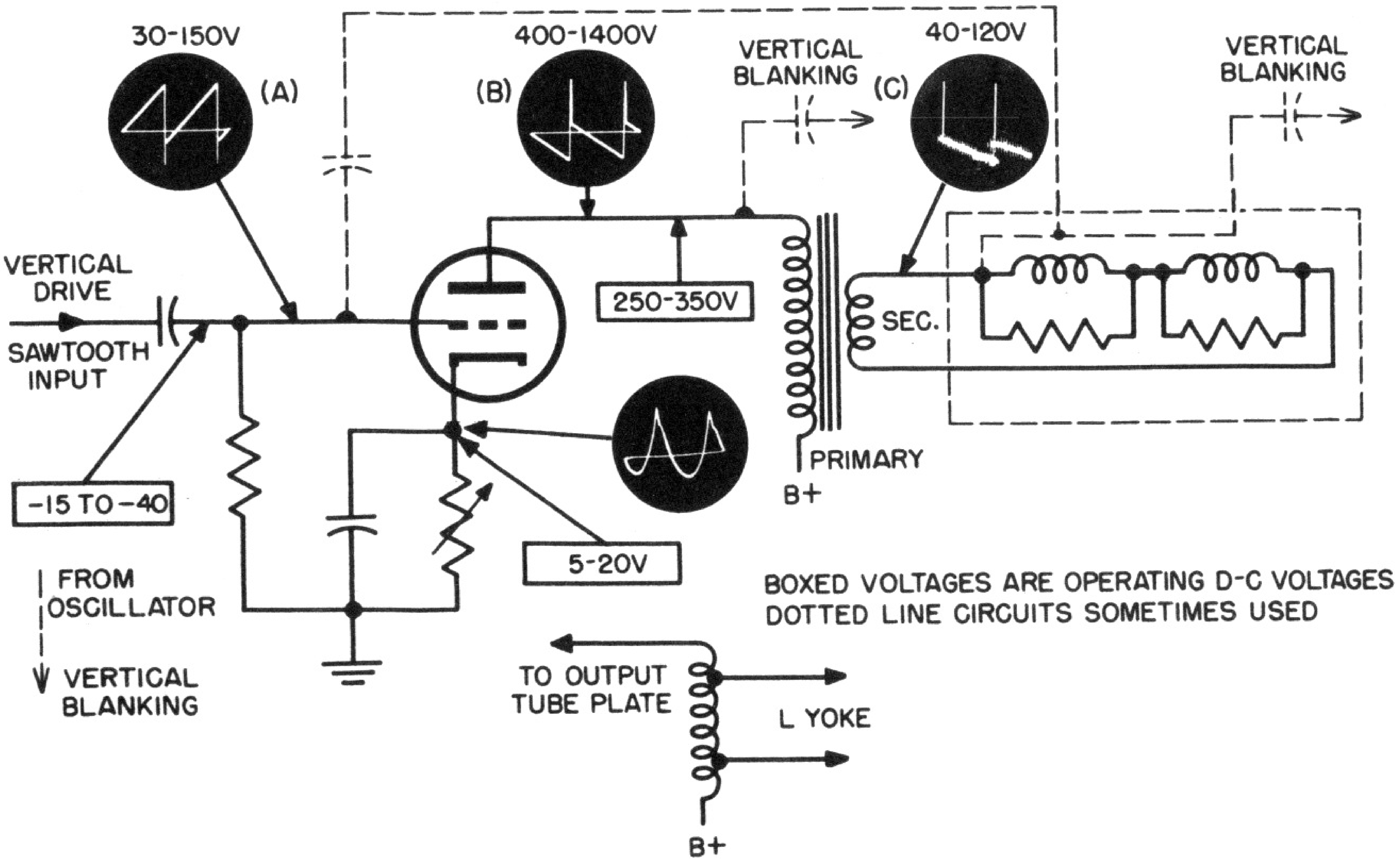

BOXED VOLTAGES ARE OPERATING D-C VOLTAGES
DOTTED LINE CIRCUITS SOMETIMES USED

Fig. 8-1. Typical waveforms and d-c voltages in the vertical deflecting systems.

The Vertical Output Transformers Waveforms and Voltages in Vertical Sweep Output Systems

In Fig. 8-1 is shown a conventional vertical sweep output system with a variety of normal waveforms at customary check points. The latter are the control grid, the plate and the cathode of the vertical output tube, the high side of the secondary of the output transformer, and the high side of the vertical deflection coil. The last two check points are the same if proper continuity exists.

The numbers adjacent to the voltage waveforms state the range of sweep voltage amplitudes in peak-to-peak values which are to be encountered in most receivers. In any one receiver the sweep signal voltage level is generally expressed by a single number. The numbers within the rectangles encompass the range of operating d-c voltages used at the stated tube electrodes in different makes and models of receivers.

Because of the wide variety of signal and operating voltage values used in different receivers, it is imperative that the reference data given in service literature produced by the receiver manufacturer and appearing in Rider Manuals and Tek-Files be used for guidance. Occasionally, sweep voltage as well as operating voltage amplitudes are correlated with settings of the grid drive, linearity, and width controls. These must be noted and considered when diagnosing faults in such circuits.

Detailed explanations concerning the waveforms shown in Fig. 8-1 are not necessary here because they were discussed fully in Chapter 3. However, it might be well to devote a few moments to a selected number of items that warrant comment in connection with defects which might occur in the system.

The grid drive sweep voltage applied to the control grid of the vertical output tube is a determining factor in the shape and amplitude of the sweep voltages at the remaining test points in the system, assuming everything to be normal. Any defect in the grid circuit (as, for example, incorrect cathode bias, defective cathode by-pass capacitor, incorrect grid leak resistor, leaky coupling capacitor, leakage between the control grid and the heater – at the socket – or between the control grid and the cathode) will influence the amount of grid drive voltage and the shape of this voltage. Therefore this condition will determine the waveform and amplitude of the sweep voltages in the remainder of the output circuit.

Examples of grid drive voltages of improper waveform are shown in Fig. 8-2. These are but a few of many possibilities, since the nature

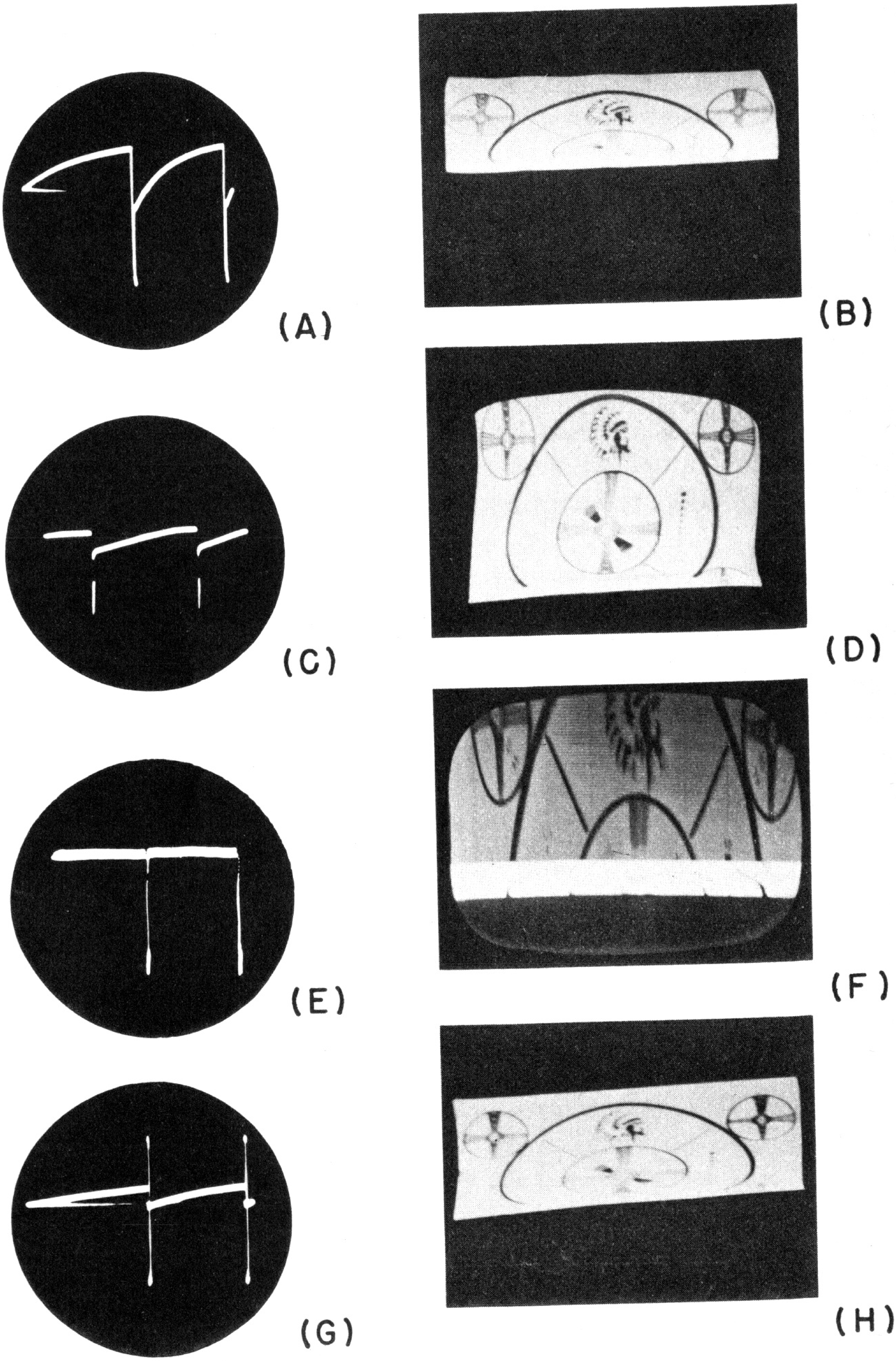

Fig. 8-2. Examples of improper grid-drive voltage waveforms.

and magnitude of defects is a variable. The important features to look for as causes underlying the defective waveform in the output circuit are the nonlinearity and flattening which causes foldover, and continual motion representative of vertical jitter.

Insufficient grid bias will, as a rule, produce grid clipping and this in turn can result in foldover and insufficient picture dimensions vertically. On the other hand it is entirely possible that the grid drive voltage waveform can be correct, yet be below the amplitude necessary for the generation of the proper sweep voltage in th output circuit. The result – insufficient height, without nonlinearity or foldover. Excessive grid bias, due perhaps to excessive peaking, may not impair the grid drive voltage waveform to any noticeable degree, yet can cause breakdown of the vertical output transformer, due to the excessive amplitude of the pulse voltage generated in the output tube plate circuit during the negative excursion of the grid drive voltage. This point was discussed in Chapter 3.

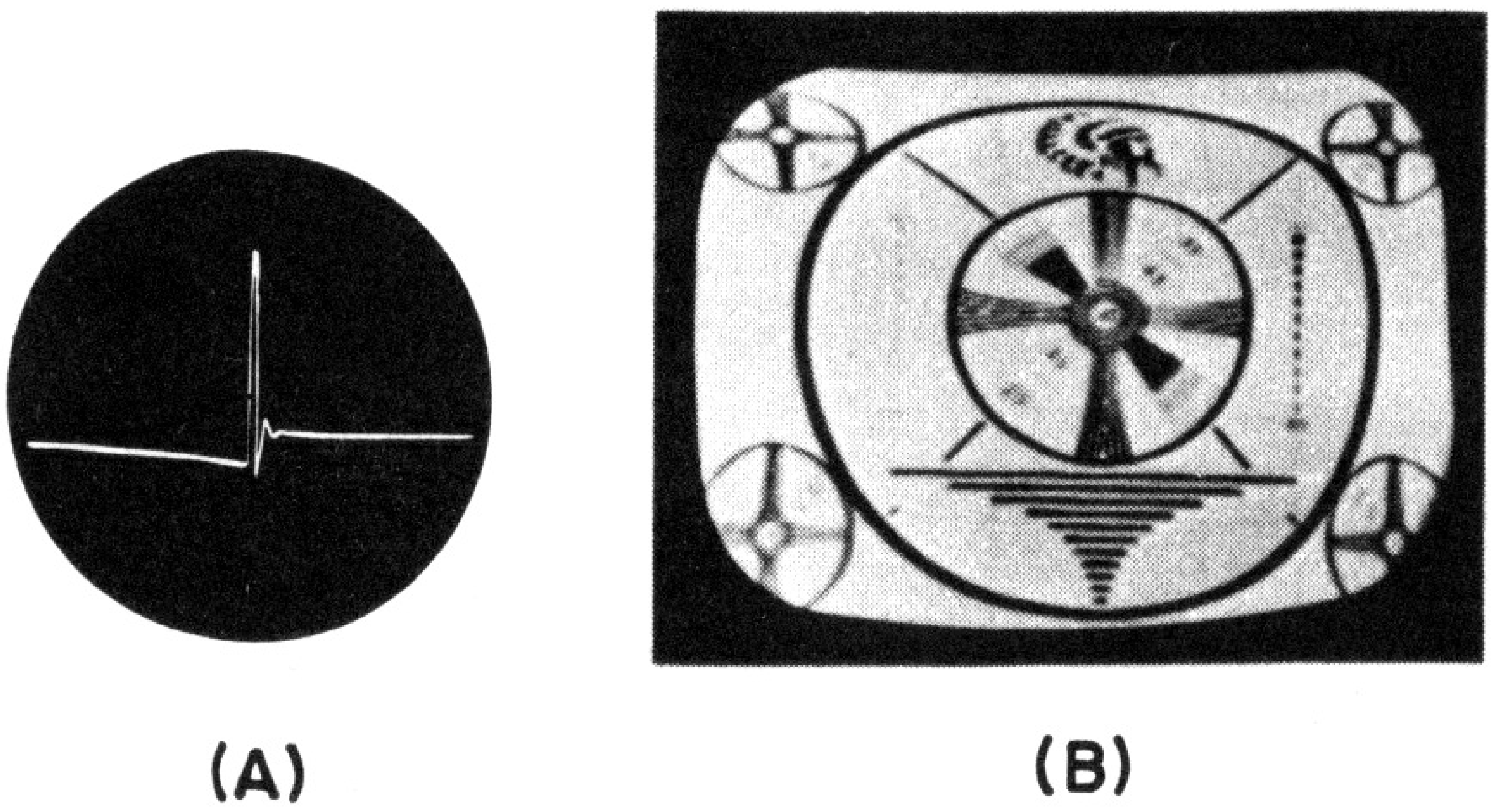

Fig. 8-3. (A) Vertical output-tube plate, sweep-voltage waveform showing transient due to excessive bias. (B) Picture reflecting this condition.

Vertical *retrace troubles* can be divided into two groups: those which relate to the shape of the grid drive voltage, especially the dimensions of the peaking voltage relative to the sawtooth portion, and those which relate to the vertical blanking systems. Excessively high grid bias or excessive peaking can cause a transient in the output tube plate voltage pulse during the vertical retrace period and produce an output voltage waveform like that shown in Fig. 8-3 (A). A horizontal shading bar appears near the top of the raster, the transient occurring shortly after the downward sweep has started. The picture can be nonlinear, as shown in Fig. 8-3 (B). Insufficient peaking of the vertical grid drive voltage

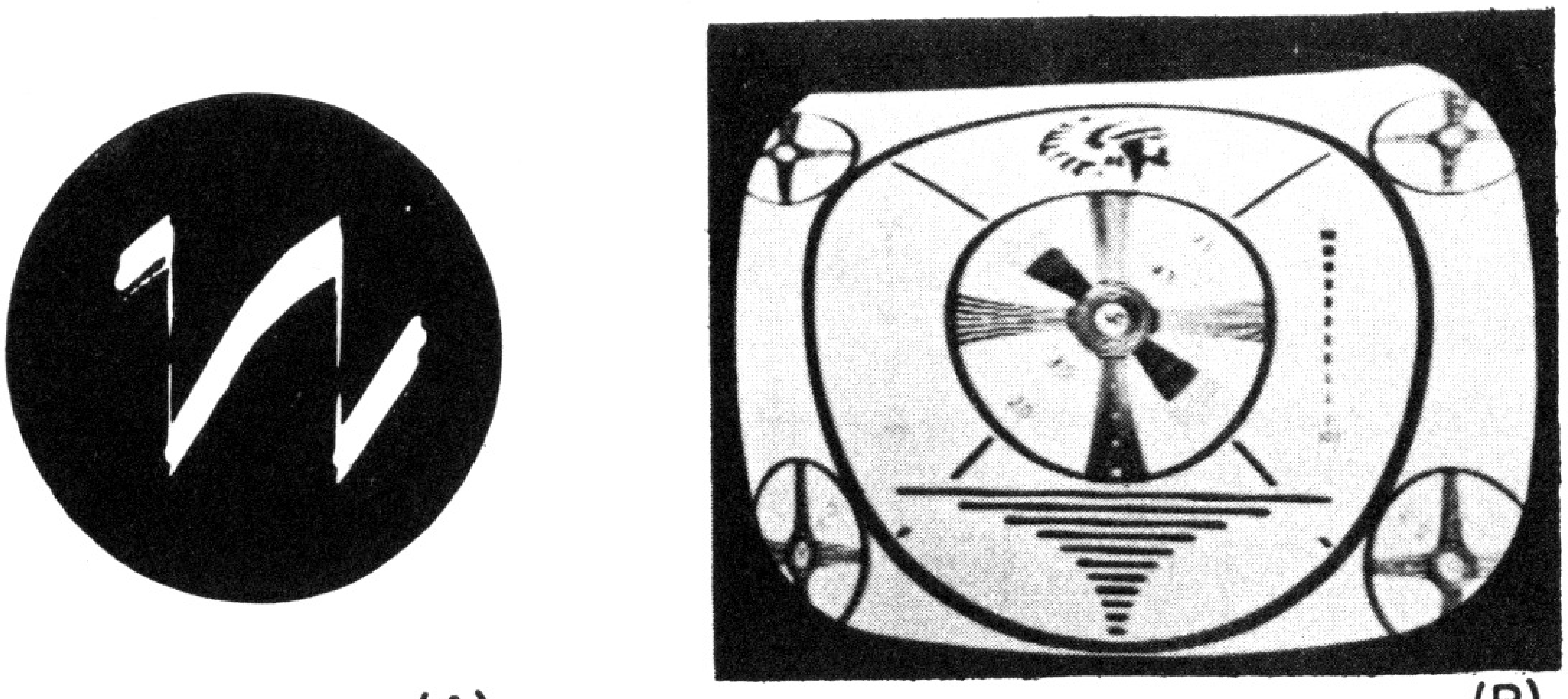

(A) (B)

Fig. 8-4. Picture tube display and voltage waveform typical of the condition of incorrect output transformer or deflection winding constants.

can cause a slowed-down vertical retrace which would crowd the top of the picture and possibly result in loss of picture. The conditions shown in Fig. 8-3 are correctable without too much difficulty by adjustments in the peaking circuit, and detectable by noting the relative amplitudes of the portions of the grid drive waveform and comparing them with specified waveforms whose proportions are known to be proper (photographs or labeled proportions). Be wary of line drawings.

Vertical *blanking troubles* are (1) those which prevent blanking of the vertical retrace, and (2) those which prevent any display or cause a dim display. The first is an obvious fault, either insufficient blanking voltage from the source, or the blanking circuit is open or contains a very high resistance. In the second case, the blanking circuit contains

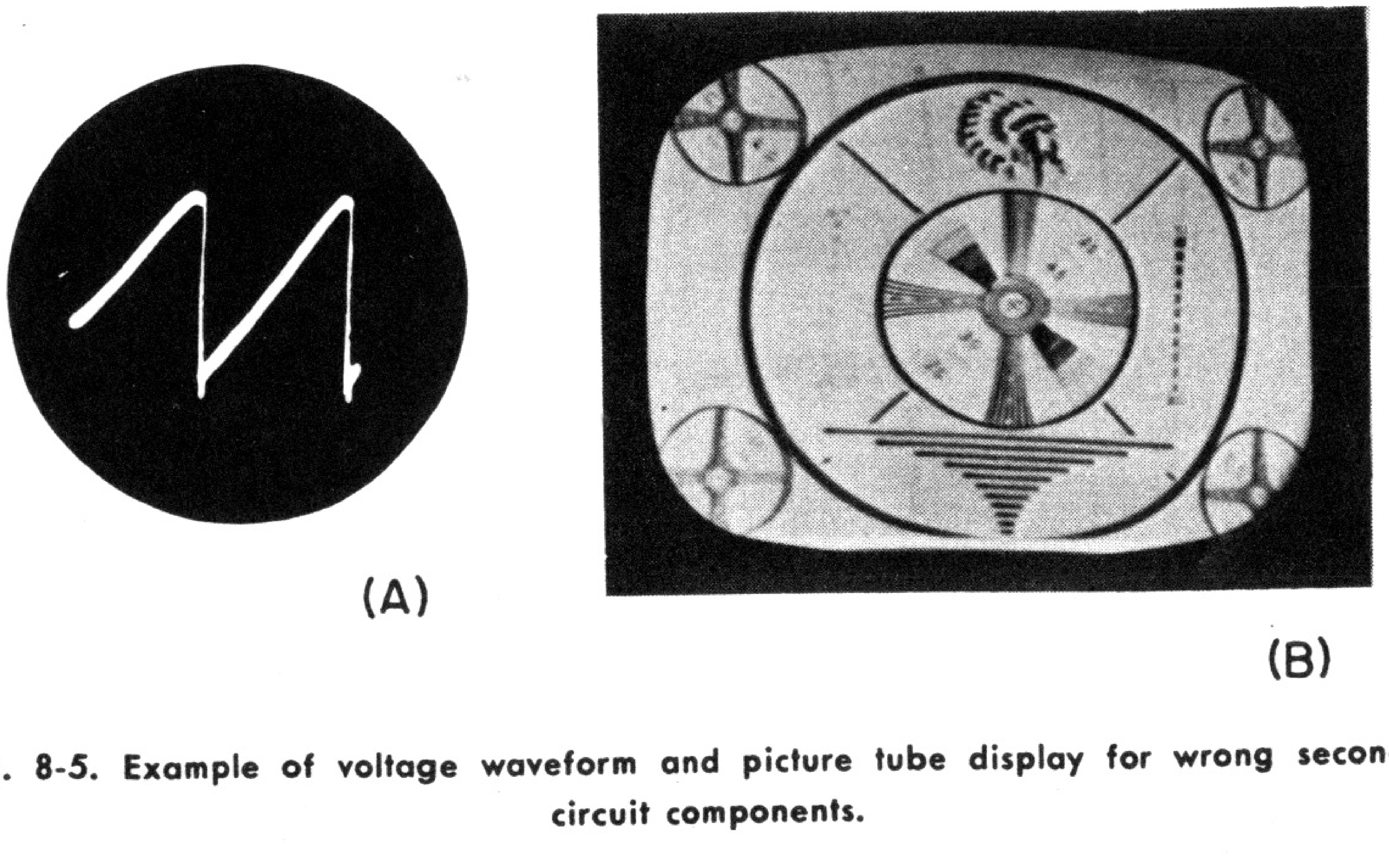

(A) (B)

Fig. 8-5. Example of voltage waveform and picture tube display for wrong secondary circuit components.

a shorted capacitor or a leaky capacitor. This causes such a high level of blanking voltage applied to the control grid, or cathode or screen of the picture tube as to extinguish or dim the electron beam.

Instability of the picture in the vertical direction, that is, jitter or bounce, is occasionally due to defects in the vertical output transformer. It may be breakdown between separate primary and secondary windings (partially shorted coils), excessive 60-cps a-c in the output tube plate voltage, poor by-passing in the plate circuit, or induced 60-cps hum in the secondary circuit.

Premature failure of the vertical output tube may be caused by incorrect output transformer or deflection winding constants in the form of wrong components. Adjustment of the height and linearity controls appears to give a proper picture display, but output tube plate current may be excessive. This shortens the operating life of the tube. Examples of picture tube display and voltage waveforms corresponding to this condition appear in Figs. 8-4 and 8-5.

If definite specifications and means of measurement are not available, substitution of the vertical output transformer is recommended.

Excessive vertical output-tube plate current with fairly good vertical linearity is cause for suspecting a wrong output transformer or yoke.

Defects in the output transformer will appear as improper sweep voltage waveforms across primary and secondary windings. Nonlinearity and low amplitude are typical. Seldom will this affect the shape of the grid drive voltage; hence, if the latter is correct, whereas deformation of the waveform exists in the plate circuit, the trouble can be localized as being in the output circuit. It might be well to remark that the vertical linearity control can react on both plate circuit and grid circuit signal waveforms, also that output tube troubles may result in distorted output volages without affecting the grid drive voltage waveform.

Although excessive picture height can sometimes be due to abnormally high grid drive voltage, the latter is more likely to cause overloading of the output tube. The trouble more likely is in the application of higher than normal plate voltage to the output tube, due perhaps to a defect in the voltage supply system.

Shorts in the vertical deflection coils are indicated by certain particular symptoms. They cause distortion in the geometry of the pattern on the picture tube screen and are discussed separately later in this chapter. Open circuits in the winding will prevent vertical deflection, although in some instances the pattern on the picture tube screen may be a broad horizontal line, rather than a thin one, because the capaci-

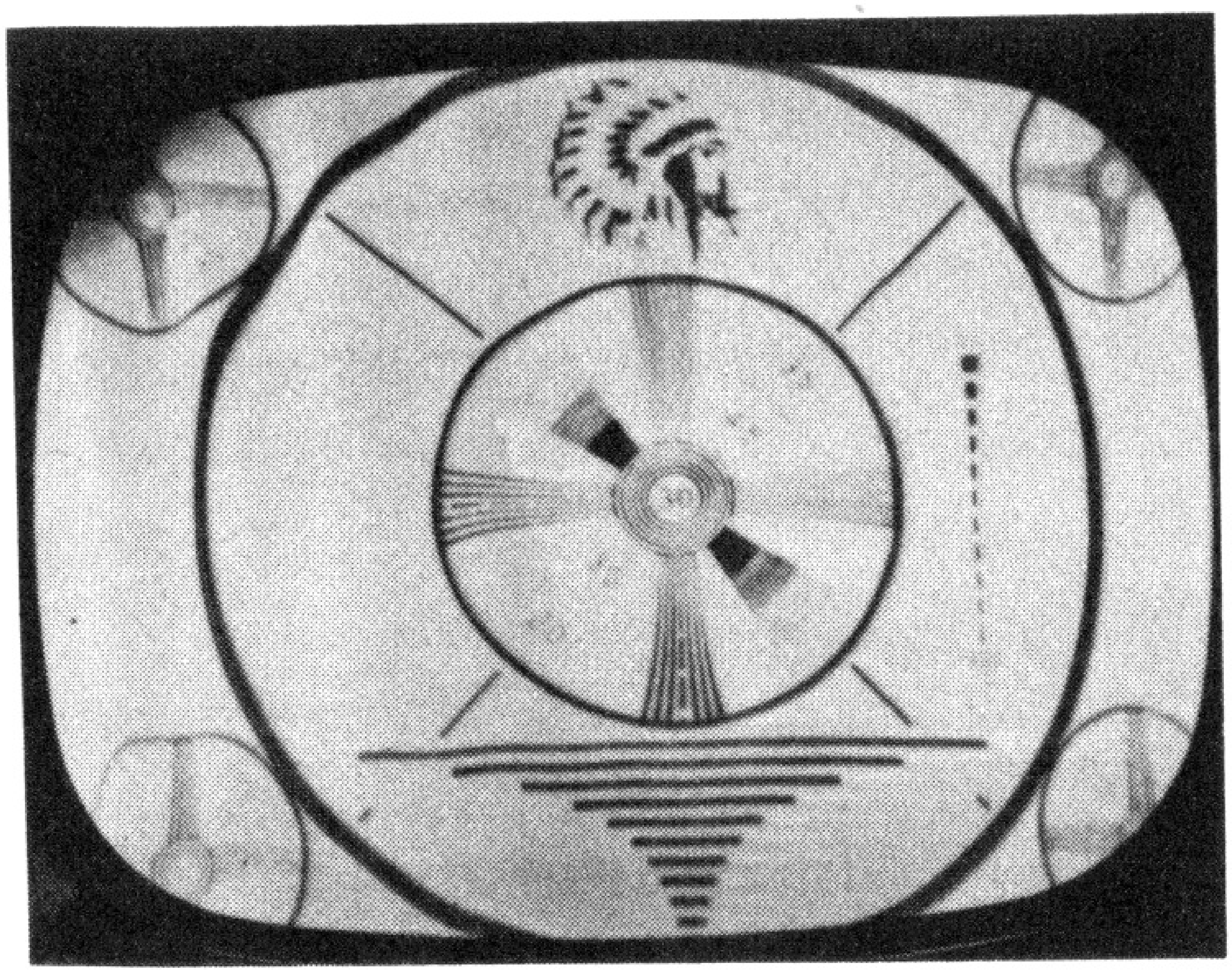

Fig. 8-6. Example of vertical ringing due to insufficient damping across the yoke winding.

tance between turns may allow the flow of a slight amount of sweep current. A short circuit across the entire deflection winding or across the transformer winding will prevent deflection, whereas a high resistance leak will merely reduce the amount of deflection.

Troubles in the self-excited type of vertical output system are not too different from those ascribed to the conventional circuit. As indicated in Chapter 3, the self-excited circuit uses a feedback loop between the plate circuit of the output tube and the vertical oscillator. Therefore, the amplitude and linearity of the vertical grid drive voltage is a function of the electrical condition of the feedback network. For that matter, the very presence of a grid drive voltage is dependent on the dual functioning of one tube as the output tube and as the discharge tube. Otherwise, the self-excited circuit is similar to other types.

When insufficient damping exists across the vertical deflection windings, because of open damping resistors or abnormally high resistance damping resistors, the resulting transients can display two effects. One is horizontal shaded lines across the picture tube screen and some distortion of the pattern. This is evident in Fig. 8-6 by the wavy lines in the circles at the corners and in the horizontal bars in the picture. It will be recalled that transients in the plate circuit pulse, due to excessive peaking in the grid drive voltage, also produce shaded lines across the screen near the top of the tube, so that the two symptoms might be confused. Ringing, due to the damping resistors, usually causes a number of these horizontal shading lines. Sometimes the effect of vertical shading lines indicates that the vertical transients are coupled into the horizontal circuit.

Occasionally a deflection yoke may have a bad core; that is, the unit has a low *Q*. This will reduce deflection and also will tend to reduce the retrace pulse amplitude. This does not happen often, but when grid drive and plate circuit sweep-voltage amplitudes and operating voltages appear normal, yet the deflection is insufficient, changing the yoke is suggested.

Experience has shown that the voltage at the control grid of the vertical output tube is a key measurement, and that it helps classify the fault as being ahead of the output tube, in it, or beyond it. Either of the last two conditions are determinable by measurement at the terminals of the output tube of the d-c operating voltages, and resistance tests at the socket terminals with the tube removed and the receiver power turned off. When tube substitution is made, the plate current should be checked.

Observation of the sweep voltage waveform in the plate-cathode circuit of the output tube is helpful and its findings must be correlated with what appears on the picture tube screen, and what appeared at the control grid. Reduced deflection without distortion of the waveform usually results from resistive leakage paths across windings, whereas defects in the windings themselves invariably interfere with the waveform as well as reduce the amplitude of the voltage. Under the circumstances, the everyday d-c resistance measurement remains an important means for identifying defective components or leakage paths.

Waveforms and Voltages in Horizontal Sweep Output Systems

In Figs. 8-7, 8-8, and 8-9 are shown the three basic types of horizontal output systems, with typical normal sweep voltage waveforms at the usually used test points. Minor variations mean little, because exact comparisons for a given receiver must be made only to reference sweep waveforms in the service literature for that receiver.

The three schematics symbolize the conventional transformer-coupled circuit in Fig. 8-7, the autotransformer-coupled system in Fig. 8-8, and the direct-drive arrangement in Fig. 8-9. Test points are indicated by circled letters in the three schematics. The grid drive voltage waveforms (a) at the control grid of the output tube are similar to the three versions of the output, as are the range of peak-to-peak values of the voltage.

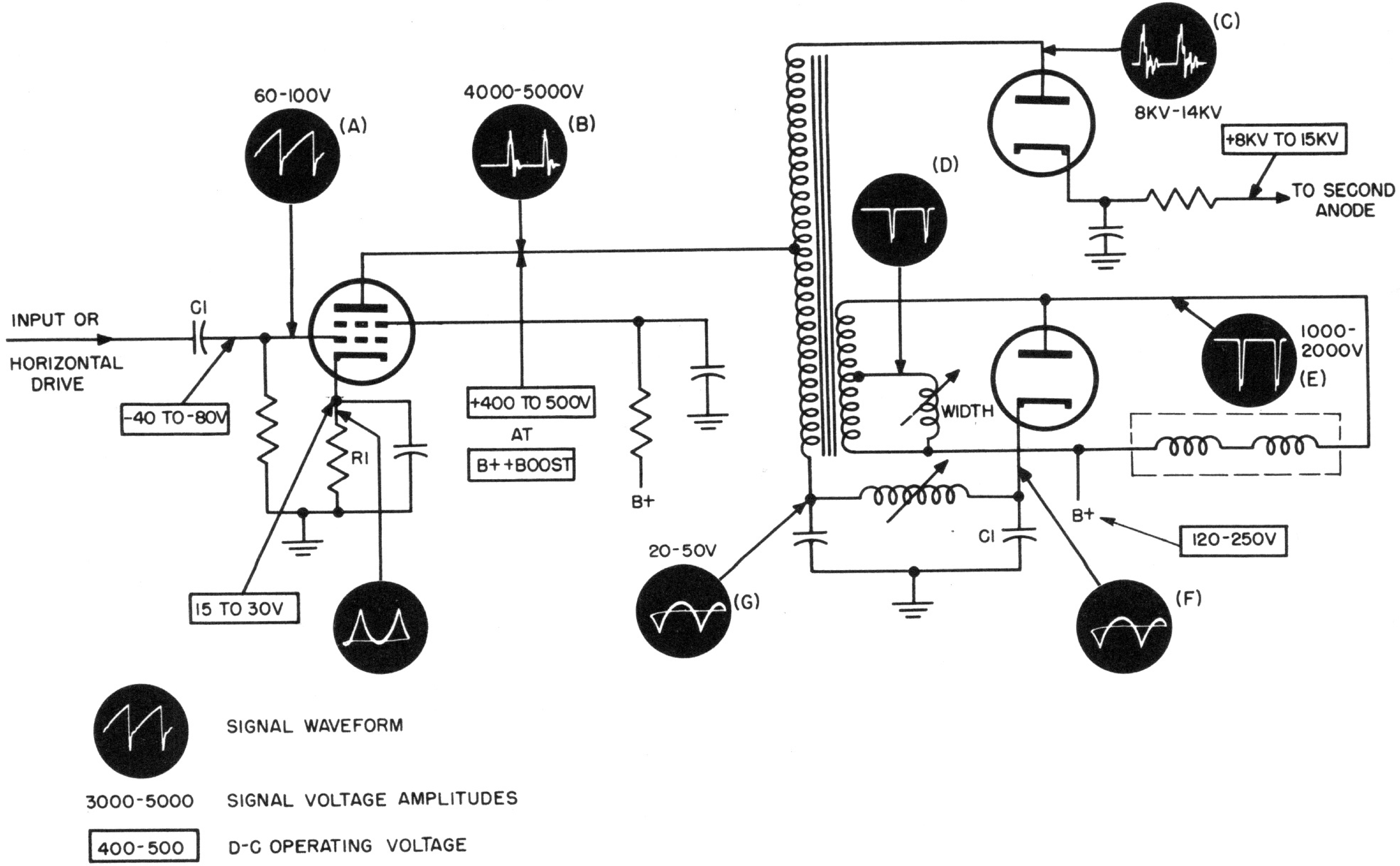

Fig. 8-7. Waveform and d-c voltage analysis of the basic horizontal deflecting system.

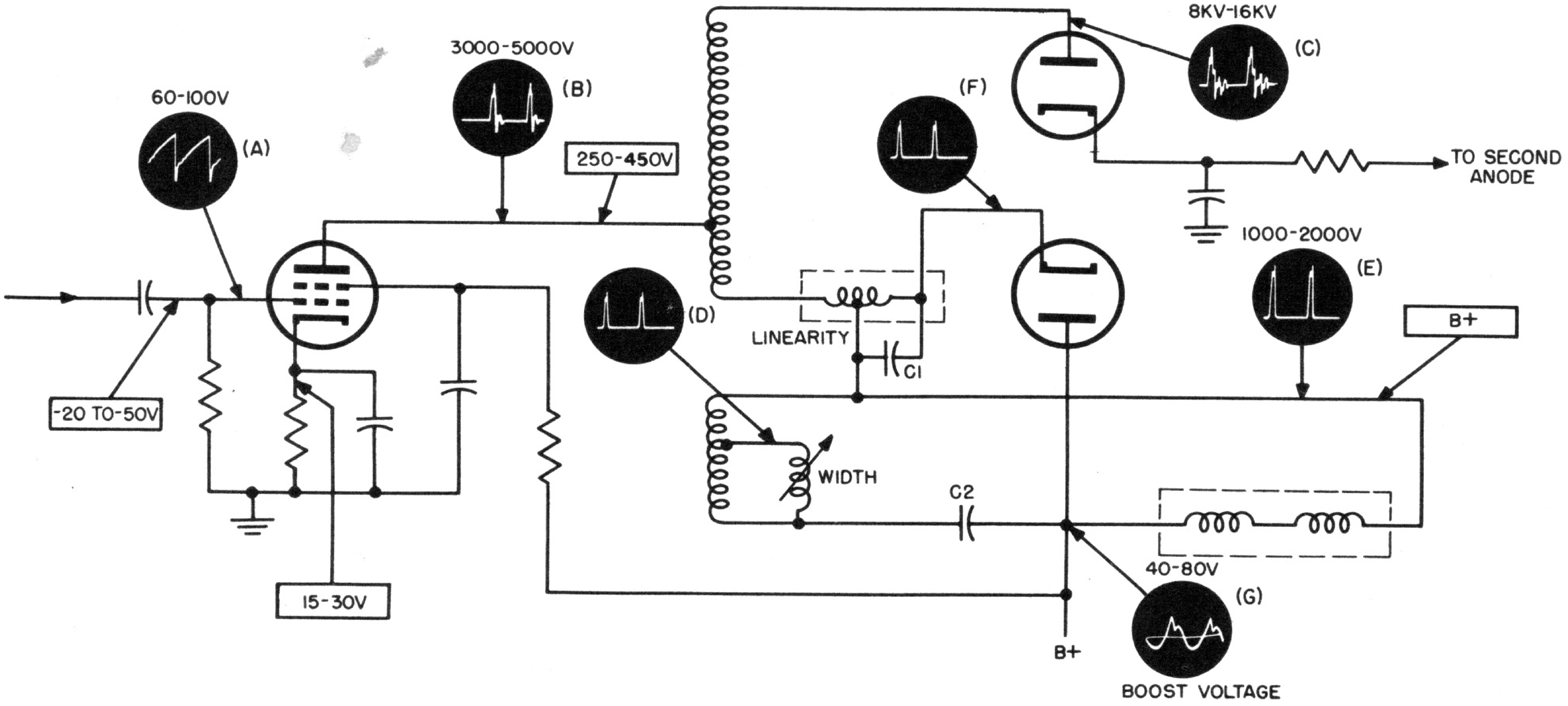

Fig. 8-8. Waveform and d-c voltage analysis of autotransformer type of horizontal deflecting system.

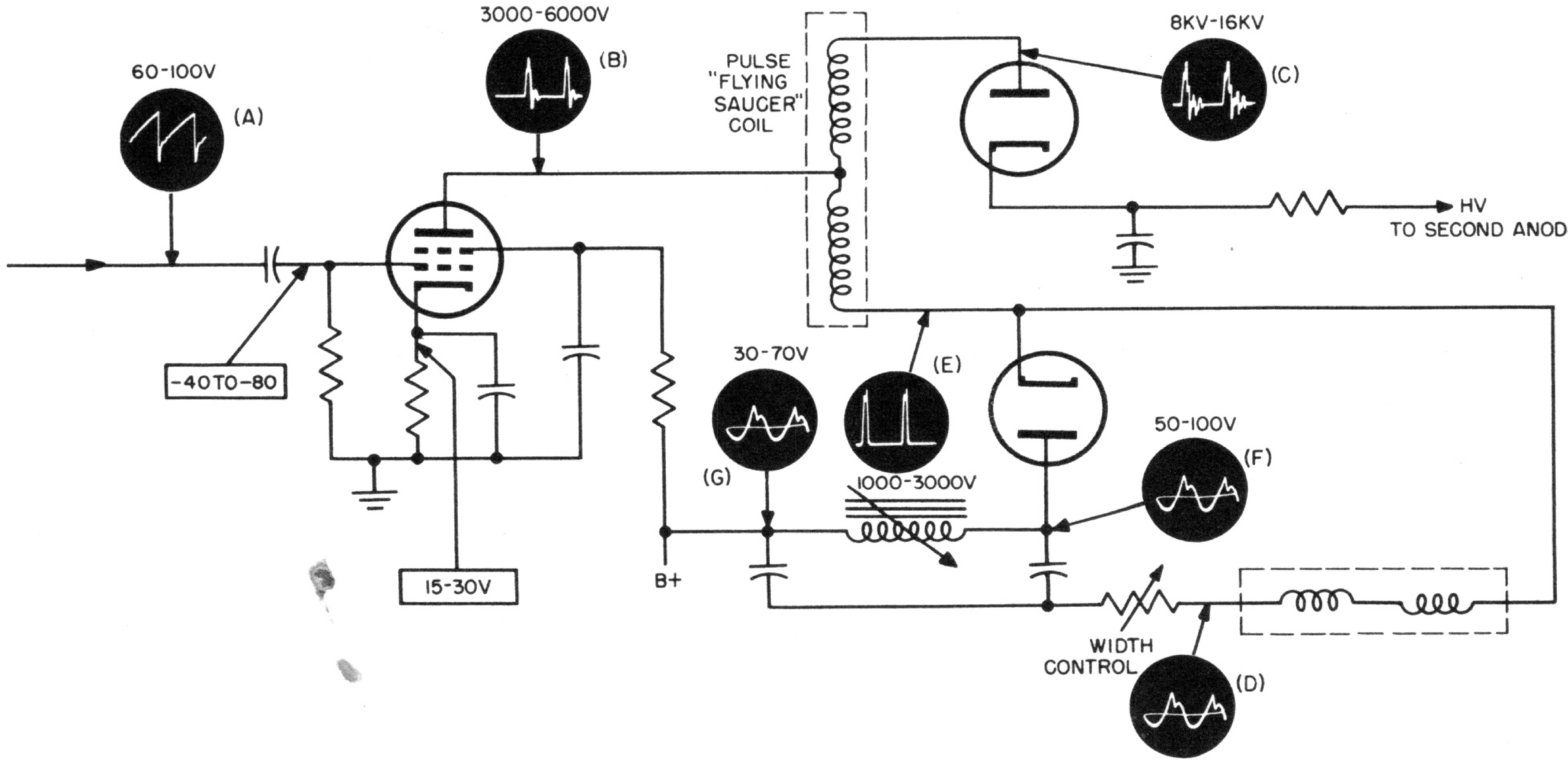

Fig. 8-9. Waveform and d-c voltage analysis of the direct-drive type of horizontal deflecting system.

The sweep voltage (b) at the plate of the output tube has the same general waveshape and polarity in all three systems. The sharp positive spike is the inductive kick generated in the deflection winding when the output tube plate current is cut off. It is transferred back to the plate of the output tube through the transformer, being stepped-up in the process and appearing as a positive pulse at the plate.

The negative pip at the end of the positive pulse is the momentary high negative voltage which is generated by resonances in the output transformer. It causes the plate of the output tube to swing below the potential of the screen, causes a momentary reverse current between plate and screen, and thus gives rise to very high frequency Barkenhausen oscillations. These are radiated from the output tube and often times are picked up by the antenna lead and fed through the receiver like a television signal, appearing as dark or light vertical lines at the left side of the screen. Repositioning of the antenna lead frequently removes the trace from the screen.

The other oscillations usually present on the output tube plate circuit and elsewhere in these systems results from transients that are present throughout the system, but do not under normal circumstances appear in the horizontal sweep current. They may be present in the retrace pulse, but seldom on the forward trace.

Examination of the voltage ratings shown adjacent to the waveforms is very pertinent to trouble diagnosis. It is to be noted that the voltage amplitudes across the deflection winding are the lowest for the transformer type of system shown in Fig. 8-7, and are the highest for the direct-drive circuit shown in Fig. 8-9. These should be compared with the pulse amplitude at the plate of the output tube. In addition to the control grid, usual test points are (d) at the high side of the width control, (e) the high side of the deflection winding, and (f) the linearity coil and the boost capacitor. These points are indicated by the circled letters in the three schematics.

Another interesting detail is the difference in polarity of the sweep voltages at the width coil, the deflection winding, and at the boost capacitor in the three basic circuits. These were explained in Chapter 5, and should be taken into account in troubleshooting.

In contrast to the vertical sweep output system, the horizontal output system contains many more test points where high a-c voltage pulses exist and must be measured. These measurements are made with a 10:1 or a 100:1 capacitor-type, high-voltage probe. Which one is used depends on the measuring device and the voltage at the test point. The latter is used for measuring the high-voltage rectifier plate voltage. The output of the high-voltage rectifier filter is measured with a 100:1 resistive probe and a d-c meter. The lower-ratio capacity divider probe is used for measuring the other sweep voltages.

The greatest aid to trouble diagnosis is the picture tube screen. Neglecting direct deflection winding problems, visible symptoms can be placed into two major categories. These are:

1. No display or dim display.
2. The picture is present but affected in the horizontal dimension.

Inasmuch as we are dealing with two distinctly different kinds of general symptoms, it is advisable to consider each as a separate item.

No Display or Dim Display

Assuming that the high-voltage rectifier plate voltage pulse originates at the horizontal deflection winding, this being the most frequently used arrangement, and knowing that the picture tube second-anode voltage determines the ability of the beam to excite the screen and so make the picture or raster visible, the first step in trouble analysis is the measurement of the second-anode voltage, because the screen brightness depends on it.

The absence of a display need not mean complete lack of second-anode voltage; several thousand volts d-c can be present at the second anode and still not be sufficient to cause display. Insufficient high-voltage output may be attributable to defects in the high-voltage filter, the high-voltage rectifier tube, the high-voltage pulse applied to the rectifier plate, or to insufficient filament voltage applied to the high-voltage rectifier. A key voltage measurement at the plate of the high-voltage rectifier indicates if the horizontal output system is generating the a-c voltage required at the plate.

If the amplitude of this voltage conforms with the reference data, the trouble can be tied to the rectifier filament supply (the filament loop on the horizontal output transformer), the rectifier tube itself, its socket, or the components which comprise the high-voltage filter system. A suitable temporary test substitute for the high voltage rectifier filament supply is a 1.5-volt battery, which must be well insulated from ground.

If the a-c voltage at the plate of the high-voltage rectifier is low, two possibilities must be checked. The low voltage can be caused by a defect in the horizontal output system, or by excessive current drain in the high voltage rectifier system. So after exercising the required precautions, the high voltage is measured with the plate lead disconnected from the high-voltage rectifier plate cap. If the proper high voltage is available, the trouble is excessive current drain somewhere in the high-voltage rectifier or second-anode system.

If, on the other hand, the a-c voltage is still low, or there is no voltage, all signs point to the trouble being in the horizontal output circuit. If normal pulse voltage exists at the plate of the output tube, the trouble is in the high voltage winding of the horizontal output transformer.

Numerous defects can account for the absence of the high-voltage pulse at the top end of the output transformer high-voltage winding, and they are distributed throughout the system. Practice has shown the advantages of starting the analysis at the control grid of the horizontal output tube. It is the key test point.

If grid drive voltage is normal, the next test point is the plate of the horizontal output tube. Any defect in the equipment between the output tube and the yoke winding will display a major effect on the plate circuit pulse amplitude; similarly any defect in the output tube, in its heater, cathode, screen or plate circuit, or operating voltage discrepancies will affect the magnitude of the plate current passed on to the output system through the output transformer; and hence the sweep voltage and the sweep current.

Suppose the plate voltage signal is not proper. Because more direct tests are possible there, it is best to start by checking the secondary system. Such tests are circuit continuity, d-c resistance, and substitution of the damper tube. Since a number of components generally are connected in parallel with each other in the second circuit, these must be isolated one at a time as the tests are made.

What kind of defects is most likely to exist? In the case of the secondary windings on the transformer, it can be opens or shorts; in the width coil (or in the capacitor which shunts it), it can be a short or

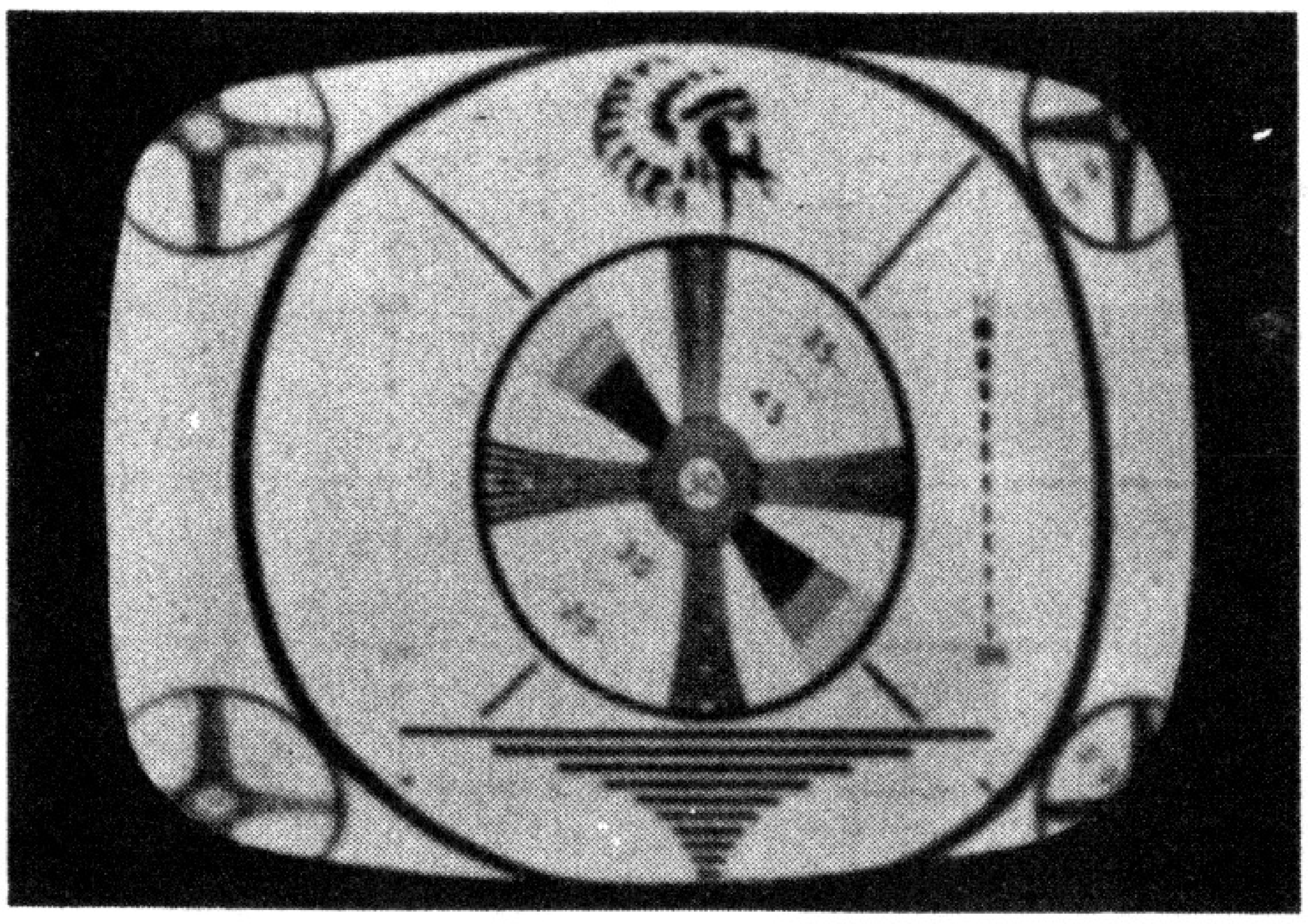

Fig. 8-10. Example of picture blooming.

low-resistance leakage path; in a resistive width control it can be an open or the development of a higher-than-normal resistance; in the deflection winding it can be an open, or a short, or a low-resistance leakage path across the entire winding; in the damper tube system it can be a defective tube or resistor which is shunting the secondary circuit, and it can be a short or low-resistance leakage path in the a-g-c winding.

The very first component that should be examined is the width coil, because it is a frequent source of trouble. If all the components in the secondary circuit have been checked and found perfect, then a discrepancy in the d-c resistance of the output transformer primary has much more meaning, and the transformer is suspect.

Picture Tube Symptoms with Broad Meaning

In contrast to the trouble symptoms indicated by the *absence* of a picture or raster, there is a second broad category which is indicated by a *defective* picture or raster which appears on the picture tube screen. Some picture displays are incorrect in both the vertical and horizontal dimensions, whereas others are affected only in the horizontal dimension. These two broad varieties form the subdivisions of the main category. The first of these is generally classified as *picture blooming,* whereas there is no distinctive name for the second group. Each picture symptom bears its own identifying name.

Picture Blooming

Examples of picture blooming are shown in Fig. 8-10. The most prominent and most frequently occurring defects are open and leaky capacitors and faulty resistors in the high-voltage power supply. But the trouble also can occur in the horizontal output system, where as the consequence of a reduced amplitude pulse generated across the deflection winding, the high voltage applied to the high-voltage rectifier is low, and the reduced second-anode voltage *softens* the beam, thus permitting increased deflection in both vertical and horizontal directions for normal or even subnormal deflection currents. A defective core in the yoke can cause it; also a bad horizontal output tube, or an incorrectly shaped grid drive voltage which slows down the rate at which the output tube reaches plate current cut-off. For that matter, a high resistance leak across the deflection winding can affect the height of the pulse generated across that coil without reducing the width of the picture too noticeably. The defocusing which usually accompanies picture blooming is corrected automatically when the defect is removed.

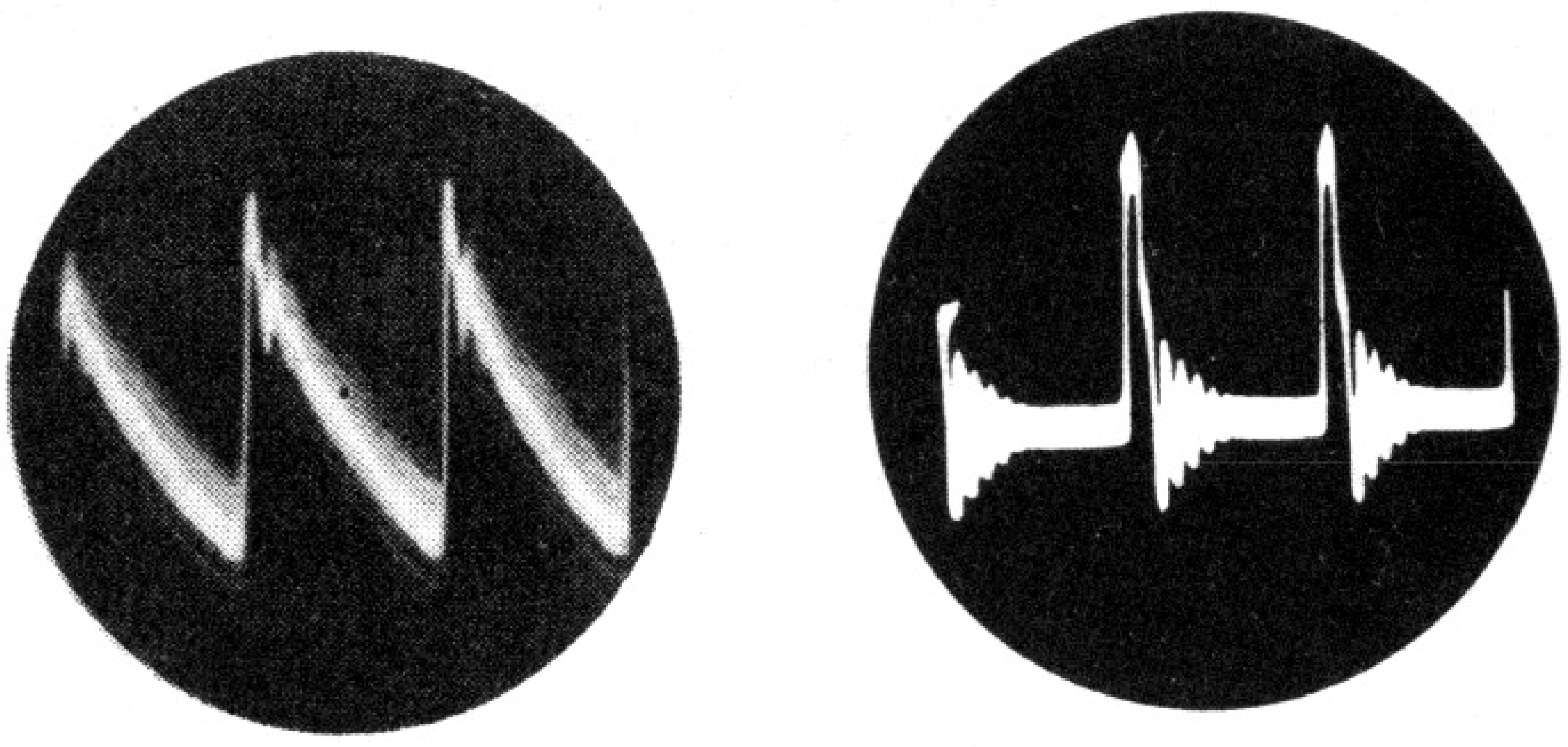

Fig. 8-11. Waveforms at input of high voltage filter with filter component troubles.

Observation of the high-voltage waveform at the output of the high voltage filter can disclose improper filtering conditions because the transients in the voltage applied to the plate of the high-voltage rectifier will be present to some extent on the rectified output. When filtering is correct, these transients are of very low amplitude. Several examples of abnormal waveforms at the output of the high-voltage rectifier filter with filter capacitor troubles are shown in Fig. 8-11. In some filter circuits the input capacitor, normally connected to the damper tube instead of ground, may open. The result is a positive pulse at this point. When this capacitor is functioning correctly, the waveform across it shows a negative pulse.

Key Test Points for Pictures Defective in Horizontal Dimension Only

Examples of these defects are nonlinearity, foldover, ringing, insufficient width, excessive width, dark horizontal bars, horizontal jitter, etc.

The Control Grid. The control grid of the output tube is a key test point whose importance has been explained.

In Fig. 8-12 are shown two horizontal grid drive voltage waveforms typical of those responsible for nonlinearity and foldover conditions. Some of these faults can originate in the horizontal oscillator system or in the circuit between the oscillator and the output tube; that is, in the peaking circuit and hence must be corrected there. Others can originate as a result of overdriving the output tube with too much grid voltage or insufficient bias. Incorrect by-passing with parasitic oscillation, a defect in the feedback system (if used), and improper operating voltages can affect the waveform of the grid drive.

Obviously it is impossible to show every variety of grid drive voltage waveform representative of these conditions. These few examples are sufficient to make clear the fact that grid drive waveshapes which

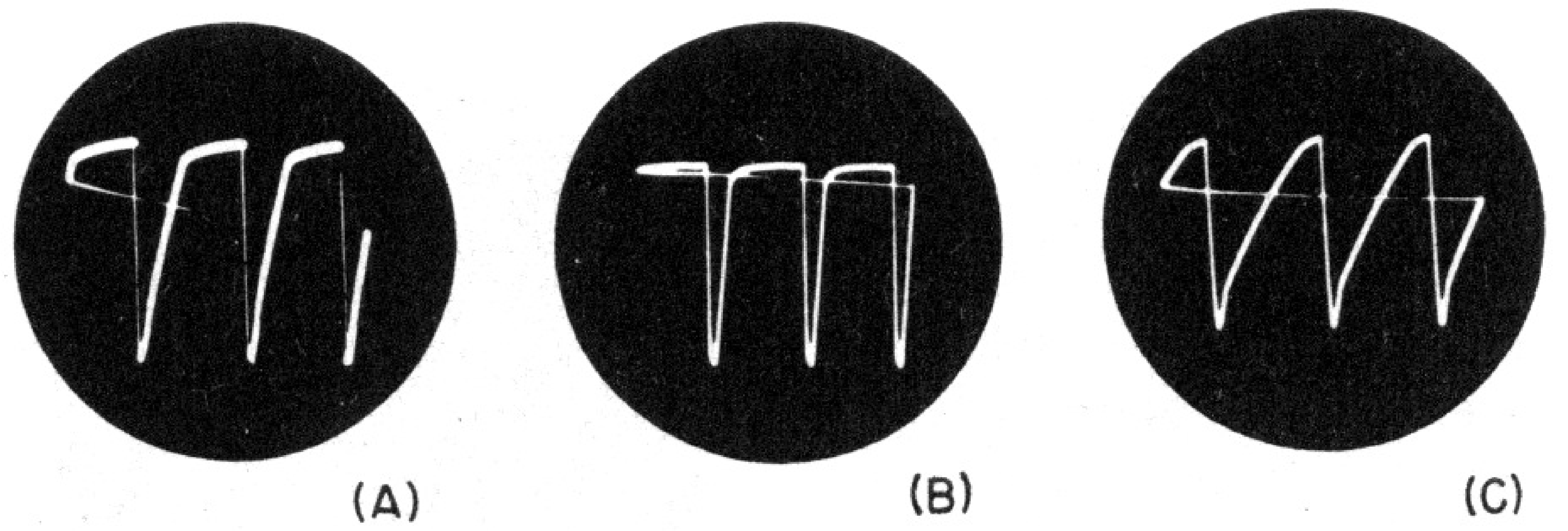

(A) (B) (C)

Fig. 8-12. Grid-drive voltage waveforms indicating: (A) and (B) foldover troubles, and (C) normal waveform.

approach these in appearance account for the symptoms extant on the picture tube screen. The explanations contained in Chapter 4 identify the portions of the waveform, but it might be well to repeat here that excessive curvature in the sawtooth portion accounts for the nonlinearity over the right half of the picture. Flattening or reduced slope of the sawtooth portion is the basis for the foldover at the left edge of the picture. Examples of the sweep voltage at the plate of the output tube for right-side foldover, compared to a normal wave, are shown in Fig. 8-13. Trouble in the plate or yoke voltage waveform must be traced back along the circuit to where it first appears. This may be at the control grid of the output tube. In some cases excessive grid drive voltage also accounts for excessive picture width.

The Width Coil or Width Control Resistor

The grid drive voltage waveform may in some cases not be distorted, but have low-peak-to-peak amplitude. The result may be a picture or raster of insufficient width and no other visible flaw. The fault would then most obviously be in the oscillator or in the control grid circuit. If not there, it can also be in the width coil (or its capacitor), leakage across the transformer primary or secondary which feeds the deflection winding, or even shorted turns in the transformer winding, all of which conditions would produce pictures which lack proper width. This leads to the statement that the high side of the width coil also is a key test point, but only under certain circumstances; namely, when the grid drive voltage is normal, yet width troubles exist. An open width coil would account for excessive voltage under such conditions, as would a shorted width control.

For reasons previously explained, very little is gained by going directly to the width coil or to the side of the output transformer secondary circuit without first checking at the control grid.

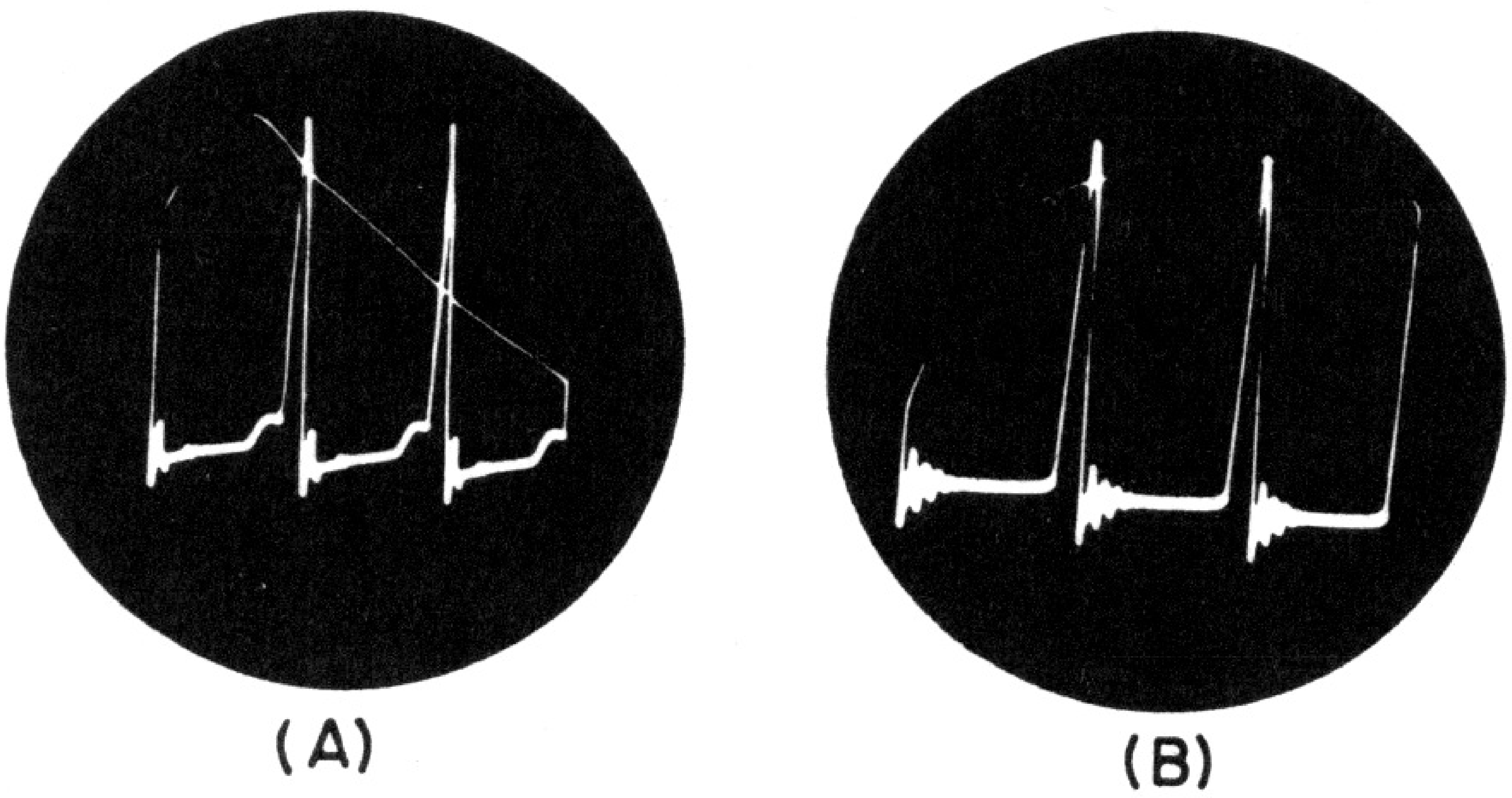

Fig. 8-13. Example of output tube plate voltage waveform (A) indicating right-side foldover trouble, and (B) normal waveform.

The Damper Tube and Linearity Circuit

The damper tube and linearity circuits can be considered together as test points. As described in Chapter 4, their functions are related to each other; in fact they have a common junction. The damper tube is responsible for the production of the first (left) half of the horizontal sweep trace and the linearity circuit is responsible for proper shaping of this portion. This helps localize troubles indicating improper left-side deflection.

The usual run of pictures symptomatic of faults in damper tube and linearity circuits are shown in Fig. 8-14. It will be seen that they embrace nonlinearity over the *left* half of the picture, and insufficient width foldover at the left side. Ringing is (in many instance but *not always*) evidence of that kind of defect in the damper system, which prevents the tube from properly damping the transients in the retrace signal. Such are open or incorrect value capacitors, low-emission damper tubes, and open damper tube circuits. Defective damper tube systems that short circuit the deflection yoke and the output transformer secondary winding result in no picture or raster display at all.

Other causes for ringing are related to the deflection winding, especially an open or wrong-value balancing capacitor. Sometimes this capacitance is critical in value, and while a wrong value may not result in *severe* ringing, the amount of ringing which does occur may be noticeable.

A very interesting and possible confusing defect appears in Fig. 8-15. The picture tube pattern is for an open boost capacitor in the conventional transformer coupled output circuit, although it can occur

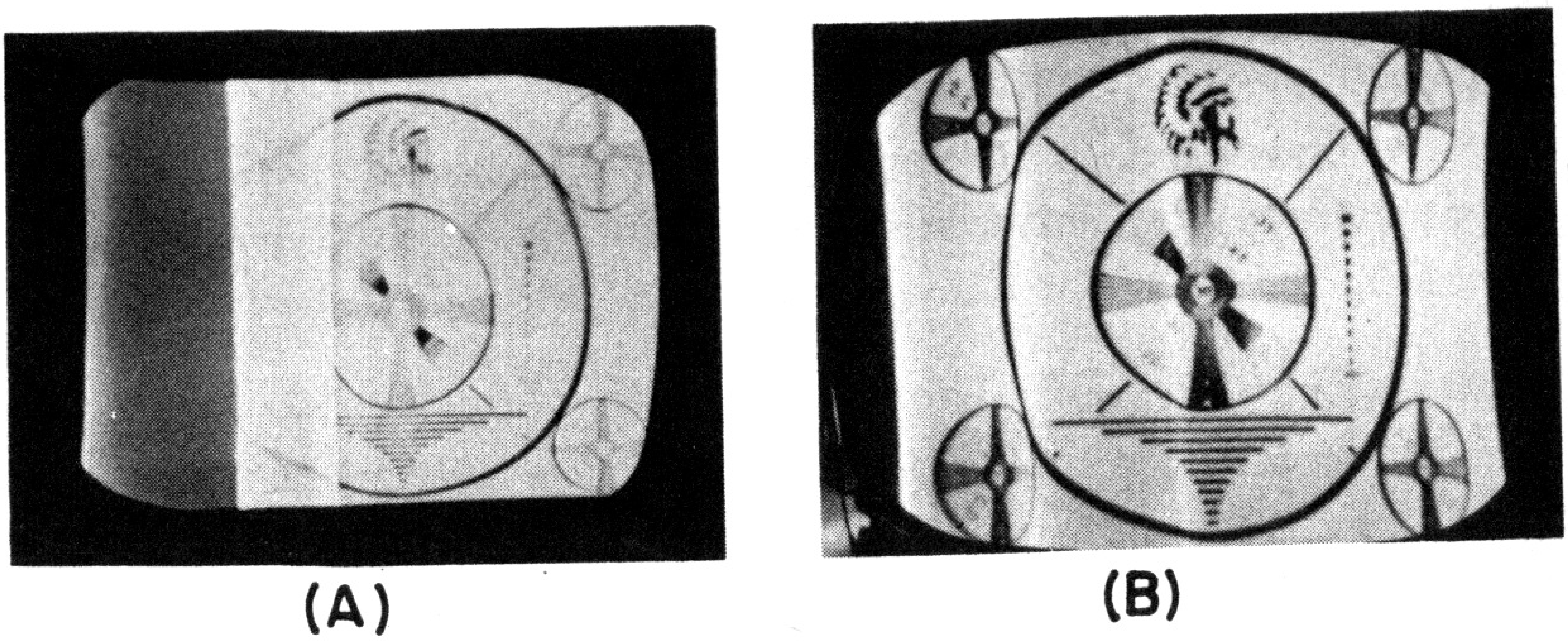
(A) (B)

Fig. 8-14. Examples of picture symptoms for damper and linearity coil troubles, showing left-side foldover and ringing.

in other circuits. The picture lacks proper width, yet the raster extends across the entire screen. The sweep voltage waveform at the damper cathode is shown in Fig. 8-15 (B). It is a far cry from the usual parabolic shaped waveform. The damper tube waveform shows that the retrace transient returns the beam to the extreme left edge of the tube, but in the absence of proper behavior of the damper tube-boost capacitor-linearity circuit, several oscillations of the retrace transient take place. This gives the beam a to-and-fro movement across the screen surface, with one complete oscillation occurring before the picture information begins. In the absence of proper damping and shaping of the sweep current, the second cycle of the retrace transient moves the beam back and forth

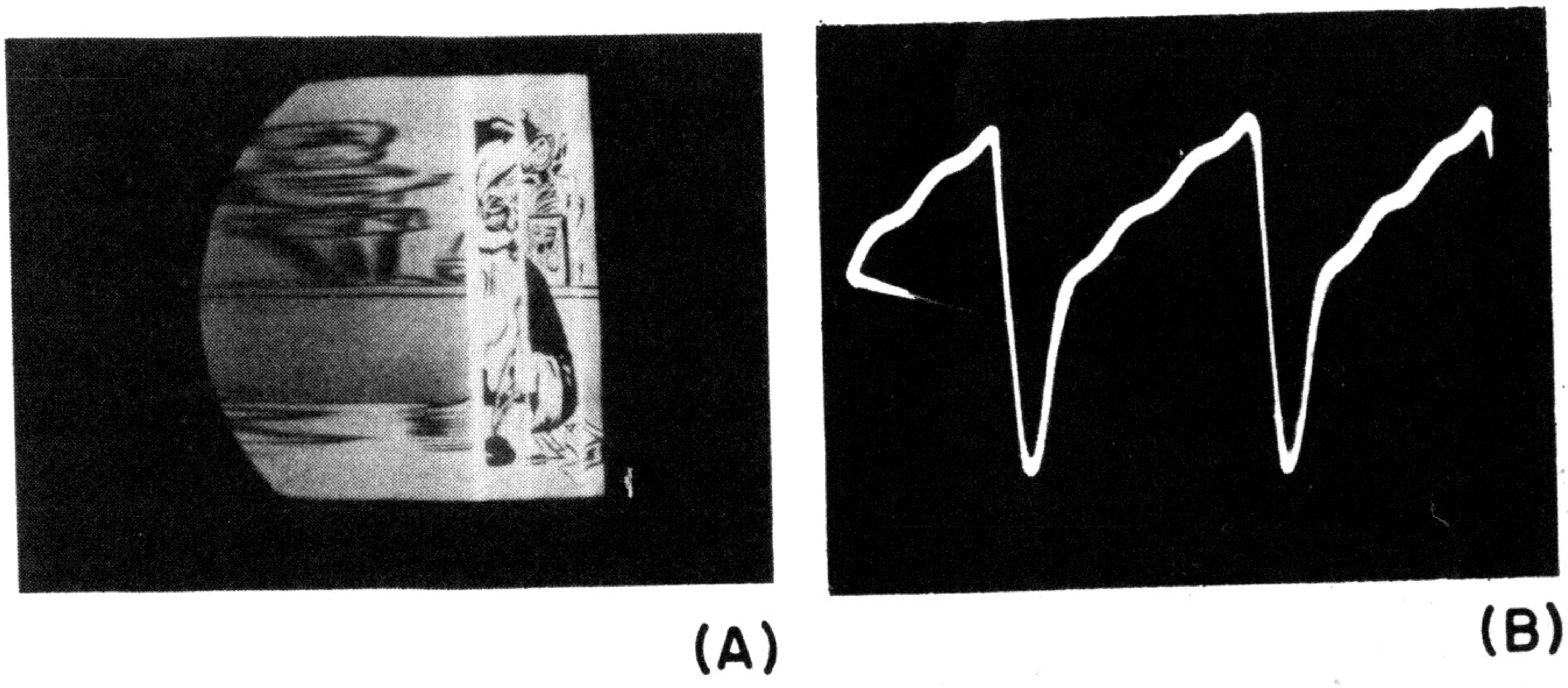
(A) (B)

Fig. 8-15. (A) Picture tube pattern in case of open boost capacitor; (B) damper tube voltage waveform in this case.

with picture information, thus causing the foldever shown by the broad bright line.

As has been explained, the logical place to make the tests and measurements for left-side defects is in the damper tube and linearity circuits.

Pattern Geometry Distortion Due to Yoke Troubles

The ordinary normal raster or picture as seen on the picture tube screen is a rectangle in a 4:3 proportion, and the width and height controls should be set accordingly.

Sometimes defects present in deflection windings *only* will modify the normal rectangle and make it rhombic, pin-cushioned, barreled, trapezoidal, bow-tied, or of some other shape.

If the pattern outline is rhombic or diamond shaped, one set of coils in the yoke is not exactly at right angles to the other. The fault can be detected by direct inspection of the assembled structure from the inside, or by the relative locations of the bent-up edges of the windings. In either case, replacement of the yoke is the only sensible solution.

Pincushioning, or sagging inwards of the side of the pattern, represents a condition oftentimes resulting from defects built into the yoke. Very little can be done about it except when anti-pinchusion magnets are provided with the receiver, in which case these magnets are adjusted for its elimination. These magnets are mounted on small frames which surround the cone of the tube.

Barrelling, or bulging of the raster sides, is another difficulty inherent in yokes. However, it may be caused by butting adjustment spacers having dropped out, which would aggravate the amount of distortion relative to the normal amount.

Both pincushion and barrel distortion are frequently present in television receivers, but are not too evident in the masked-off picture because the portion of the raster where these forms of distortion would be most readily discernible are behind the mask, or even beyond the limits of the screen. The curvature present in these forms of distortion is easily seen when both vertical and horizontal lines are in the picture.

A trapezoidal pattern, or either vertical or horizontal keystoning, means that one of a pair of deflection coils is wholly or partially short-circuited. The coil positioned in the direction of the narrowest part of the pattern is the short-circuited coil. There is no remedy but to replace it.

Bow-tie patterns are the result of reversed connections to one of a pair of deflection windings inside the yoke, or perhaps improper direction of the winding of the coil. Rewiring or replacement is the obvious answer.

Reversed Patterns

Another variety of defect which can be tied directly to the deflection coils is the reversed pattern shown in Fig. 8-16. This is evident only when picture information is present in the raster, or when the retrace lines can be made visible in a synchronized or unshaded raster. It means that the connections to the vertical deflection winding, or to the horizontal deflection winding are reversed. The result is a picture that is backwards in the horizontal direction or one that is upside down. The normal direction of the visible vertical retrace lines is from the left-hand bottom of the screen diagonally upwards to the right-hand side. When the pattern is reversed, the direction of these retrace lines also is reversed.

Neck Shadow or Cutoff

The appearance of neck shadow or neck cut-off is shown in Fig. 8-17. A portion of the raster (or picture) is missing from the screen. A number of conditions can account for it, among these being the ion trap placement and the focus coil. However, the location of the yoke along the neck of the picture tube also can cause it, which is why the recom-

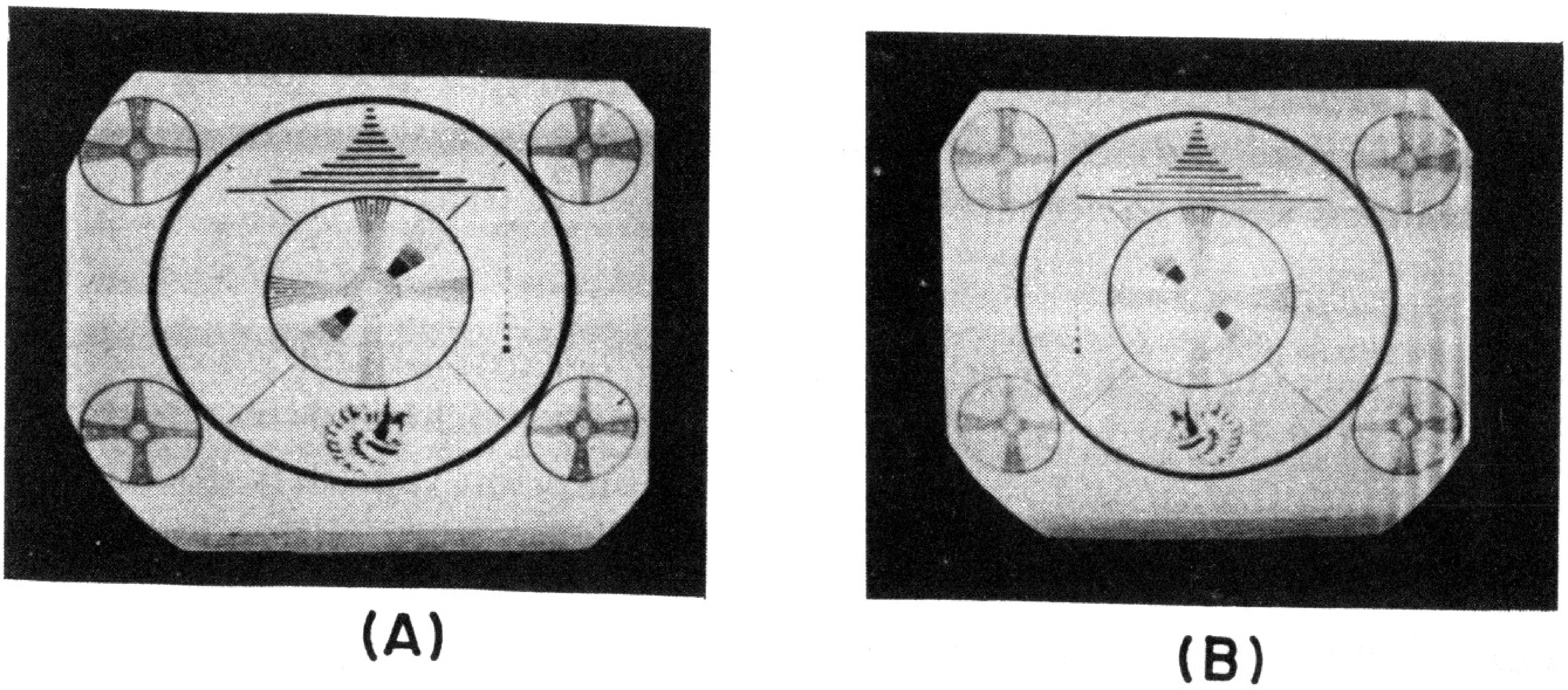
(A) (B)

Fig. 8-16. Examples of reversed picture. (A) Vertical inversion due to reversal of vertical deflection-coil leads. (B) Vertical inversion and horizontal reversal due to reversal of leads to both the vertical and horizontal deflection coils.

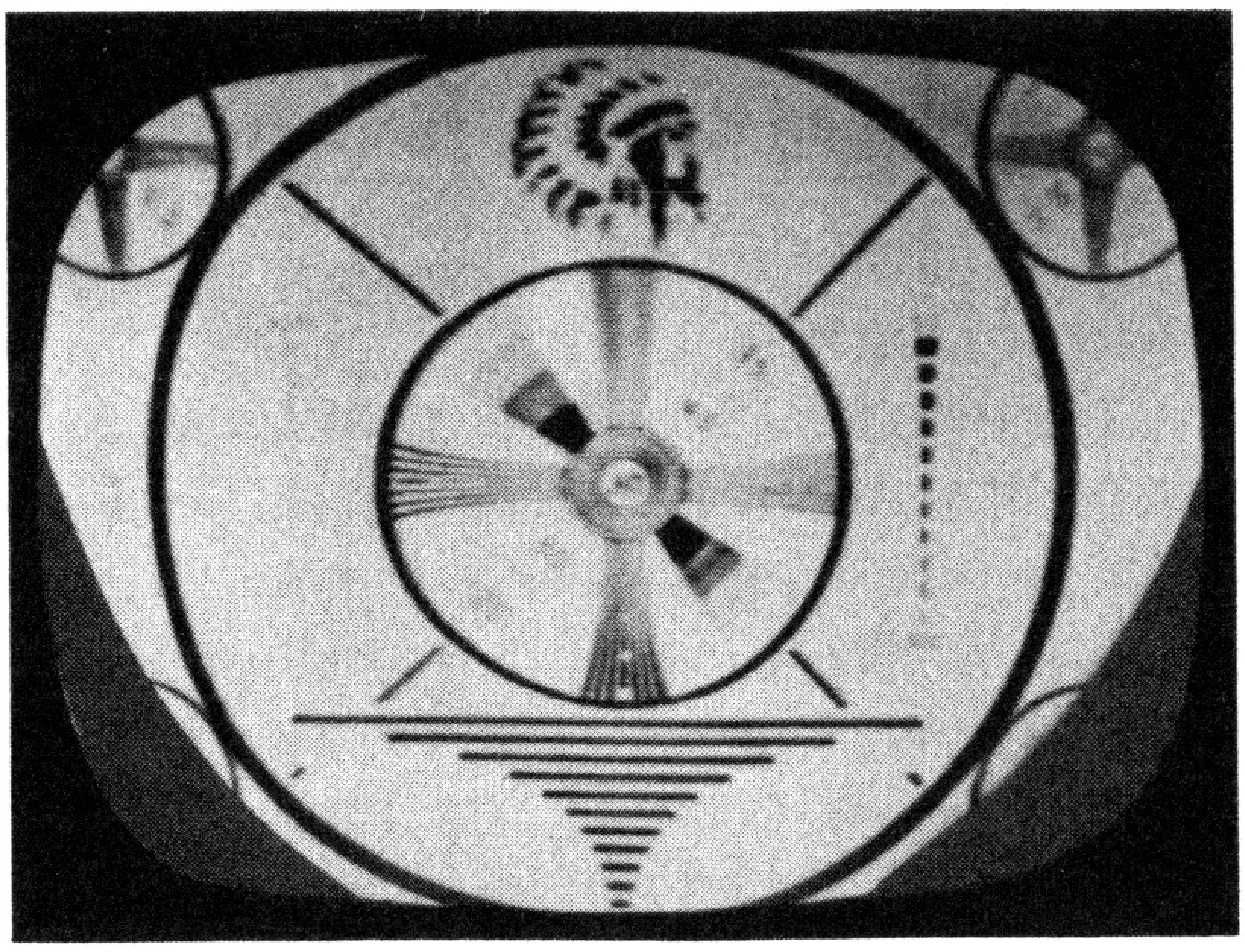

Fig. 8-17. Example of neck shadow.

mendation is made to place the yoke as far forward along the neck of the tube towards the conical portion as it will go. This is especially important in 27-inch tubes, although it applies to all screen sizes. Sometimes the rubber bumpers on the front of the yoke-holding-bracket, or nonconfiguration of the yoke flare for the tube being used, forces the yoke position too far back along the neck of the tube. In such cases a suitable yoke must be procured. Misfits of this kind are not uncommon since the neck contours of different cathode-ray picture tubes may cause as much as ¼-inch interference in the forward movement of the yoke.

Tilted Picture

A tilted picture can be attributed to improper positioning of the deflection yoke radially. Rotation of the yoke as a whole or whatever other means exists to accomplish this will correct the tilt.

Spot Distortion

Defocussing of the spot can take place because of the yoke characteristics. If a compromise adjustment cannot be achieved by means of the focus control, it is a reasonably safe assumption that it is due to the characteristics of the deflection yoke and a replacement is justified.

Corona Detection and Remedies

The most common symptom of corona discharge is sudden, temporary disappearance of the raster accompanied by crackling or sparking noise in the interior of the set. Severe discharge indicates that the high-voltage system is becoming temporarily short-circuited to ground, with the attendant loss of voltage. Generally, such sparking can be seen somewhere around the high-voltage system.

A second common form of corona breakdown is a slight dimming of the picture, and with sluggish action of the brightness control, *accompanied by a frying sound* among the high-voltage components. This type of breakdown may *not be visible,* due to being hidden or due to its emanation from some small sharp point in the system. A most effective way to track down these points is to use a "listening" tube. This tube should be from 12 to 18 inches long, about 1½ inches in diameter and made of *insulating material* (it can be wound from heavy kraft paper). With the ear at one end and the other end of the tube used as a probe, small corona discharges can be localized by listening for maximum noise in the vicinity of the horizontal output transformer, high-voltage rectifier, or second-anode voltage lead.

Another method that aids in visually localizing the fault is to lightly apply water vapor from a fine spray atomizer. Small amounts of water vapor induce breakdown and weak spots can readily be seen.

Faults causing corona are usually errors in lead dress which causes high-voltage points to be near a ground potential wire or component, or a sharply pointed soldered joint existing at high-voltage points. Sharp edged terminals around the high-voltage rectifier are apt to cause breakdown and normally should be surrounded by a corona cup or ring.

Remedy for this sort of thing is to round the projecting item—either by using a blob of solder over a soldered joint, by using a corona button (which is another neater type of solder blob), or by using corona dope. Corona dope is a fast drying, liquid plastic that may be applied to offending projections to form a smooth glassy surface. This material is readily available in service dealers' stocks and is quite effective.

Weak spots may arise if fine gauge high-voltage wires are exposed to the free air; for instance, the lead from the outside of the high-voltage secondary of the output transformer should be of fairly large diameter wire and should be well imbedded in the "tire wax" surrounding the high-voltage winding. Also, the lead from the high side of the primary to the plate of the drive tube may be a source of corona breakdown; the wire at exposed portions should be covered with corona dope, since in extreme cases it may have voltages of as high as 6000 volts.

Corona discharge may also leak to ground along the surface of insulators or capacitors. This will happen particularly in moist, humid climate and is particularly bothersome if dust or any greasy film covers the leakage path to ground. When such a case is discovered the path should be brushed clear of dust and the surface cleaned with carbon tetrachloride.

Note that leakage paths of considerable length are provided in high-voltage systems of conservative design; a distance of 1 inch for each 5000 volts is a good figure to follow. For this reason the high-voltage filter capacitor is of cylindrical form with corrugations along its top and bottom surfaces to increase the leakage path. Occasional breakdowns occur in this capacitor itself which produce the characteristics of corona discharge; a complete replacement is the only remedy in this case.

INDEX