MOUNTINGS

FOR KR SERIES

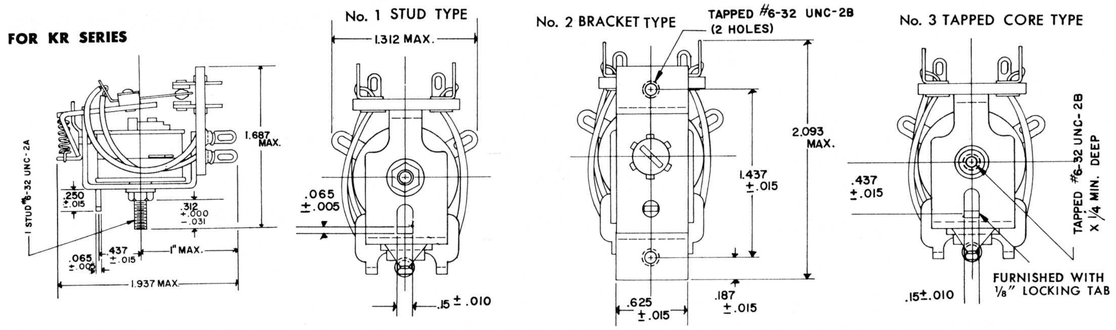

TYPE "P" CLEAR DUST COVER

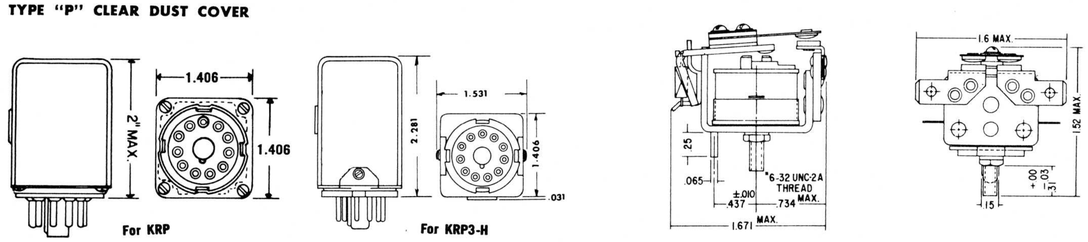

ENCLOSURES

FOR KR SERIES—HERMETICALLY SEALED ENCLOSURES

"K" TYPE

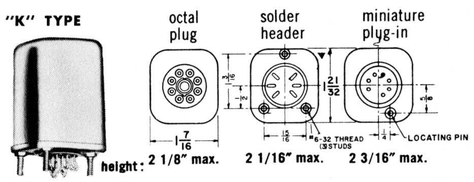

height: 2 1/8" max. 2 1/16" max. 2 3/16" max.

(can be furnished with or without stud or pin.)

"D" TYPE

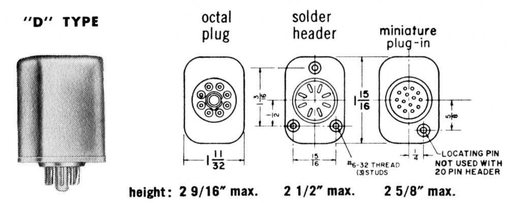

height: 2 9/16" max. 2 1/2" max. 2 5/8" max.

(can be furnished with or without stud or pin.)

KRP HOLD-DOWN SPRING

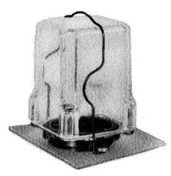

Designed to insure secure mounting of relay in any position. Ideal for inverted mounting applications or where vibration is a problem. Fits all KR relays enclosed in the "P" case. Durable stainless steel spring can be moved aside for relay removal or installation. Mounts by two 5/32" dia. holes on 1 5/16" centers; will accommodate machine screws or rivets. Available in quantities of 50 per box.

CIRCUIT DIAGRAMS

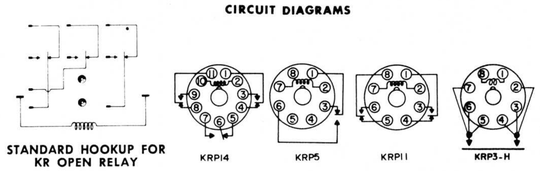

TERMINALS

Enclosure	Type Header	Number of Pins 4	5	6	7	8	9	10	11	12	13	14
Types "K" & "D"	Octal Plug-in					●	●		●			
	Solder ①	●	●	●	●	●	●	●	●	●	●	●
	Miniature Plug-in				●		●					●
"P" Case	Octal Plug-in only					●			●			

① 4 to 14 pin solder headers required 15/16" dia. clearance hole.

Standard KRP and KR3-H relays are stocked by leading electronic parts distributors throughout the United States and Canada.

POTTER & BRUMFIELD
DIVISION OF AMERICAN MACHINE & FOUNDRY COMPANY, PRINCETON, INDIANA

Form No. 13C191 3/67

PRINTED IN U.S.A.

POTTER & BRUMFIELD "KR" SERIES RELAYS

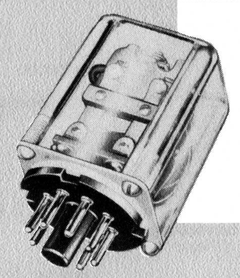

KR

KR-KRP

medium duty general purpose relay

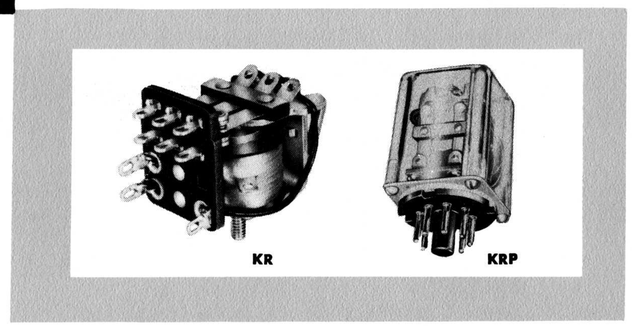

ENGINEERING DATA

The KR is an open, general purpose relay with an excellent cost-to-quality ratio for use in automation controls, communication circuits and a host of other applications.

The KRP relay is enclosed in a clear polycarbonate cover ("P" case) with 8 or 11-pin octal type plugs, providing protection against dust and dirt.

Both the KR and KRP series are ruggedly constructed to provide long life and reliability. Mechanical tests indicate a life expectancy of more than 10 million operations. These versatile relays can be furnished to operate on 6 to 110 volts DC or 6 to 240 volts AC. Coils for open and dust cover relays are centrifugally impregnated for improved moisture resistance. Contacts are available with 5 or 10 ampere ratings in arrangements of up to 3 Form C (3PDT).

A hold down spring can be furnished for KRP relays in applications requiring special mounting or where excessive vibration is a problem. KR relays are also available hermetically sealed with a variety of terminals and mountings. (Please see back cover.)

KRP-N INDICATOR LAMP RELAY

The KRP-N in the KRP relay with an indicator lamp for current monitoring or trouble-shooting applications. Lamp lights when relay coil is energized. All specifications of KRP relays apply.

GENERAL:

Description: Medium duty open or enclosed relays.

Insulation Material: Laminated phenolic.

Insulation Resistance: 1000 megohms.

Expected Life: 10 million mechanical operations, minimum.

Breakdown Voltage: 500V rms 60 Hz between all elements.

Temperature Range: AC and DC: −45°C minimum.
(open relay) AC: +70°C maximum.
DC: +85°C maximum.

Weight: Approx. 1.7 ozs. open; approx. 3 ozs. closed.

Operate: AC: 85% of nominal voltage @ 25° C.
DC: 75% or less of nominal value @ 25° C.

Enclosures: The dust covers of KRP and KRP-N relays are transparent high-impact polycarbonate, designated type "P" cases. Hermetically sealed metal cases, types "K" and "D" are also available. Please see back page.

Terminals: KR: Pierced solder lugs; plug-in headers available. Contacts will accept two 20AWG wires, coil two 18AWG wires. KRP: 8 or 11-pin octal type plugs. Hermetically sealed KR: Octal plugs, solder header or miniature plug-in. Please see back page.

CONTACTS:

Arrangements: AC and DC: From 1 Form A (SPST-NO) to 3 Form C (3PDT).

Materials: For 5 amps, ⅛" dia. gold-flashed silver; for 10 amps, 3/16" dia. silver-cadium-oxide.

Ratings: 5 or 10 amps @ 120V, 60 Hz resistive.

COILS:

Voltage: DC: to 110 volts.
AC: to 240 volts.

Power: DC: 1.2 watts standard, 100MW Min. (1 pole only).
4 watts maximum, open.
3 watts maximum, enclosed.
AC: 2 volt-amperes nominal.

Resistance: 16,500 ohms.

Duty: Continuous.

MOUNTINGS:

Please see back page for diagrams.

COIL DATA FOR KR AND KRP SERIES RELAYS

DC			AC		
Volts	Resistance in Ohms	Av. Current Milliamperes	Volts	Resistance in Ohms	Av. Current Milliamperes
6	32	188	6	6.0	335
12	120	100	12	21	168
24	472	51	24	75	84
48	1,800	26.6	120	2,250	17.5
110	10,000	11.5	240	9,110	8.75
220	Use 110V relay with 10,000 ohm 5 W wire-wound resistor in series.				

KR3-H

20 amp space saving power relay

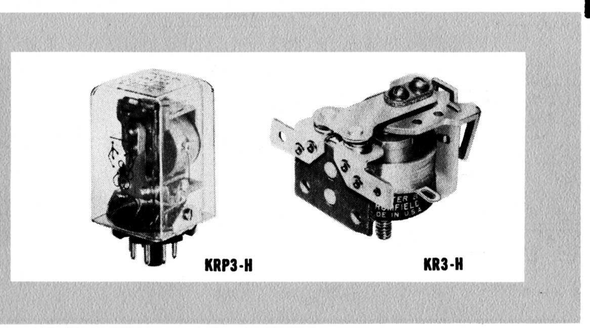

ENGINEERING DATA

The KR3-H series is a heavy duty addition to the KR series. Its small size and heavy duty contact rating of 20 amperes makes it particularly desirable for use in automation controls, communication circuits and many other applications where limited space is a factor.

Ruggedly constructed, the KR3-H series has heavy copper alloy movable contact arms with twin ¼" diameter silver-cadium-oxide contacts rated at 20 amps at 120V AC 60 Hz resistive, or 28V DC; 1 HP 120/240V 60 Hz. Its contact arrangement is 1 Form X (SPST-NO-DB).

GENERAL:

Description: 20 amp space saving power relay.

Insulating Material: Laminated phenolic.

Insulation Resistance: 1000 megohms.

Expected Life: 1 million mechanical operations, minimum.

Breakdown Voltage: 500V rms 60 Hz between all elements.

Temperature Range: AC and DC −45°C min.
(open relay) AC: +70°C max.
DC: +85°C max.

Weight: Approx. 2 ozs.

Operate: AC: 85% of nominal voltage @ 25° C.
DC: 75% or less of nominal value @ 25° C.

Enclosure: Can be furnished as KRP3-H in KAP type enclosure with octal type mounting.

Terminals: ¼" quick connect or solder on contacts. Solder only on coil.

CONTACTS:

Arrangements: SPST-NO-DB (1 Form X) only.

Material: Twin ¼" dia. silver-cadium-oxide.

Rating: 20 amps @ 120V AC, 60 Hz resistive, or 28V DC; 1 HP 120/240V 60 Hz.

COILS:

Voltage: DC: to 110V.
AC: to 240V.

Power: DC: 1.2 watts nominal.
AC: 2.0 volt-amps nominal.

Resistance: 16,500 ohms maximum.

Duty: Continuous.

Treatment: Coils are centrifugally impregnated with high quality electrical varnish.

MOUNTING:

One 6-32 stud and ¼" locating tab on 7-16" centers. Please see back cover for diagrams. Socket mounting in KAP type enclosure available and designated KRP3-H.

COIL DATA FOR KR3-H SERIES

DC			AC		
Volts	Resistance in Ohms	Av. Current Milliamperes	Volts	Resistance in Ohms	Av. Current Milliamperes
6	32	188	6	6.0	335
12	120	100	12	21	168
24	472	51	24	75	84
48	1,800	26.6	120	2,250	17.5
110	10,000	11.5	240	9,110	8.75
220	Use 110V relay with 10,000 ohm 5 W wire-wound resistor in series.				