PROPERTY OF
KSAVT
DENNIS RUSO

F M SCHEMATIC DIGEST

A Collection of Motorola Schematics

F M SCHEMATIC DIGEST

A Collection of Motorola Schematics

Published by:

SHERMAN M. WOLF

BOSTON, MASSACHUSETTS

FOREWORD

The schematic diagrams in this digest are representative of much of the equipment manufacured by Motorola in the 1950 era. This information is compiled for the many amateurs who are using converted Motorola FM equipment in the amateur bands. Motorola equipment is available in 3 catagories; 30-50 MC or low band, 150-172 MC or high band, and 450 MC. Each of these easily convert to an adjacent ham band.

Motorola continuously made minor production changes in the circuitry of its equipment. Consequently, it is impossible to include all schematics issued. Within the group of schematics in this digest, one or several schematics should be found which will include all the details of the commonly produced chassis.

While no attempt has been made to include conversion information, a rather complete listing of crystal correlation data, formulae and alignment data is included.

The crystal formulas given on the receiver schematics are to assist in obtaining the proper crystals for these units. On some of the older two piece equipments, the formulas shown are for the 40-50 MC range. Crystals should be ordered with the specific reference to the crystal type and the chassis number so that the crystal obtained will oscillate precisely on frequency.

The information contained in this Schematic Digest has been carefully reviewed for accuracy and scope.

The Publisher assumes no responsibility for any errors or omissions which might exist herein, or any liability arising from the use of this publication by any person or persons in any manner.

We acknowledge with thanks, the kind permission extended by MOTOROLA, INC. to reproduce the FM equipment schematics, certain service notes and catalog pages.

The reproduction of the schematic diagrams of Motorola communication products in this digest shall in no way be construed to authorize the use of the patented Motorola circuits for commercial or manufacturing purposes.

TABLE OF CONTENTS

REVISED EDITION

Foreword.....1
Table of Contents.....3
Pictures of Motorola Equipment.....4
Crystal Information.....6
Crystal Formulas.....7
Replacement Listings for Obsolete Crystals....7
Crystal Information.....8
Antenna Rod Cutting Chart.....8
Dynamotor Information.....8
Test Set Diagram.....9
Prealignment Information for Receivers.....9
Alignment Charts:
    Receivers without Permakays.....10
    Low Band Sensicon.....10
    High Band Sensicon.....10
    Unichannel.....10
Reference Notes for Alignment Charts.....11
Receiver Block Diagrams.....12
Motorola Squelch Circuit.....13
Motorola Discriminator Circuit.....15
Transmitter Tuning.....16
Transmitter IDC Circuits.....16
30-50 MC Receivers
    P8028.....17
Standard P8127.....18
Standard PA8119, PA8373.....19
Precision P8116.....20
Dispatcher P8628.....21
Unichannel PA9034, PA9074, PA9157.....22
Unichannel PA9244.....23
Sensicon PA8658 PA9181.....24
Sensicon PA9137, PA3663, PA8619
    PA9219, PA9266.....25
"G" Receiver TA111.....26
Comprehensive Alignment of "G" Receiver...27
Wide Banding Schematics.....28
TA232W & TA232S Dual Squelch Receivers...30
TA235 Series Dual Squelch Receivers.....31
TA235 Series Carrier Squelch Receivers...32
TRB 1040AA & TRB 1040AB Monitor Receivers33
30-50 MC Transmitters
FMT-30D P8020.....34

FMT-30D P8020.....34
FMT-30D PA8021.....35
FMT-50D PA8029.....36
Dispatcher P8620.....37
Unichannel P9030.....38
30 Watts 12VDC PA8672, PA7203.....39
60 Watts 12VDC PA8625.....40
"G" Transmitter TA104.....41
TA202A Private Line Transmitter.....42
TA202A-TP Private Line Transmitter.....43
TA234 Series Transmitters.....44
TA241 Series Transmitters.....45

150 MC Receivers
Standard P8335.....46
Precision DeLuxe PA8364A.....47
Dispatcher P8528.....48
Unichannel PA9033, PA9073.....49
Unichannel PA9033A, PA9073A, PA9158...50
Unichannel PA9243.....51
Sensicon PA8476.....52
Sensicon PA8476A.....53
"G" Strip TA140.....54
Wide Banding Schematics.....55
TA102 Monitor Receiver - Portable &
    Industrial Dispatcher Receiver.....57
TA238W & TA238S Private Line Receivers...58
TA237 Series Carrier Squelch Receivers...59
Sensicon "G" Receivers.....60
150 MC Transmitters
FMTU-30D PA8329.....61
FMTU-30 PA8345.....62
Dispatcher P8520.....63
Unichannel P9020, P9040.....64
30 Watts 12VDC PA8664.....65
60 Watts 12VDC PA8665.....66
"G" Transmitter.....67
TTD 1070 AB.....68
TTD 1090 AD.....69
TTD 1090 AG.....70
NU105 W/NU143 Power AMP.....71
Handie Talkie & Industrial Dispatcher
Low Band Pack Set.....72
High Band Pack Set.....73
High Band Handie Talkies.....74
Vibrator Power Supply for Pack Set.....76
Dry Battery Supply for Pack Set.....76
Control Panel for Pack Set.....77
Microphone for Pack Set.....77
Dry Battery Supply for Handie Talkie.....77
Handie Talkie Pocket Receiver.....78
Handie Talkie "H" Series Intercabling....79
Handie Talkie "P" Series Intercabling....80
Industrial Dispatcher Intercabling
    Motorcycle
    Motorcycle Installations.....80
Industrial Dispatcher Low Power
    Local Control Intercabling.....81
Industrial Dispatcher Low Power
    Remote Control Intercabling.....81
Industrial Dispatcher High Power
    Remote Control Intercabling.....82
NU189 Power Supply.....82
NU168 Power Supply.....83
NU170 Power Supply.....83
NU188 Power Supply.....83
NU171 Power Supply.....83
450 MC Equipment
Conversion of 450MC Receivers to 432MC...84
Alignment of 450MC Receivers.....85
Conversion of 450 MC Transmitters to 432.86
450 MC Receivers
Sensicon PA9344.....87
Sensicon TA129, TA109.....88
Sensicon TA141.....89
Sensicon TA141A.....90
TA220Z.....91

450 MC Transmitters
PA9350.....92
TU110.....92
TU204.....93
TA147T.....94
450 MC Power Cupplies
Vibrator Power Supply P9331.....95
6-12VDC Conversion Information.....95
6-12VDC Vibrator Supply TU136.....97
T44A 110VAC Conversion Information.....97
U44BBT-3100A Transmitter-Receiver
Combination.....98
U44BBT-1000A Transmitter-Receiver
Combination.....134
U44BBT Alignment Instructions.....136
General Power Supplies
Unichannel 6VDC P9027.....100
6-12VDC Converstion Instru

6-12VDC Conversion Instructions.....101
Early Unichannel Converted to 12VDC.....102
12 VDC Dynamotor Supply for 30 Watt
    Transmitter.....103
12 VDC Dynamotor Supply for 60 Watt
    Transmitter.....103
Base Station Supply for 30 Watt
    Transmitter.....104
Base Station Supply for 60 Watt
    Transmitter.....104
Base Station Supply for "G" Series.....105
Base Station Supply for 41V Series.....105
6-12VDC Supply for 30 Watt Transmitter..106
6-12VDC Supply for 60 Watt Transmitter..106
6 VDC Vibrator Supply for 30 Watt
    Transmitter.....120
TU463 & TU463S.....107
TU588 & TU588TS.....108
TU590.....109
TU430.....110
TU465 & TU465S.....111
P8238C.....111
Motrac Mobile FM Two-Way Radios
U41HHT & U51HHT-3100 Series
Schematic & Intercabling Diagram.....112
U43HHT-3100 Series.....114
U43HHT-3131A Series.....116
136-174MC 25W Carrier Squelch.....118
Interconnections
Connections of Dual Units.....120
Dispatcher Connections.....121
Dynamotor Power Supply Connections.....122
41V Interconnections.....123
Twin V 6/12VDC.....123
T44GGV Interconnections.....124
BY Base Station Interconnections.....126
BR Base Station Interconnections.....127
Miscellaneous
Control Head & Microphone TU124, TU146..128
Control Panel K8203-E.....129
Remote Control Chassis P8066.....129
Pre-Amp. & Line Amp. Chassis P8201.....130
Single Tone Oscillators & Decoders.....131
Squelch Relay.....132
T1200A Series Remote Control Console....133

Motorola, Motrac, Motran, Dispatcher, T-Power, Twin-V, Sensicon, Handie-Micro-Talkie, Pageboy, Power-Voice, Big Voice, Vibrasponder, Vibrasender, Quik-Call, Private-Line, Compa-Station, and Extender are trademarks of Motorola, Inc.

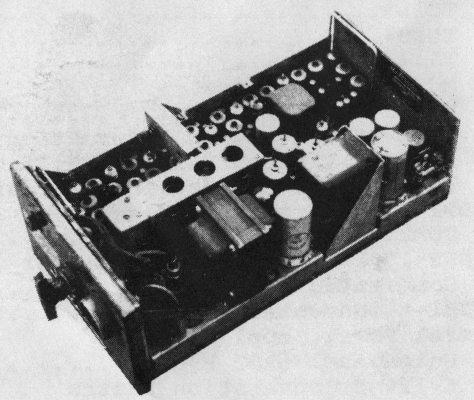

Dispatcher 5V
10W 30-50MC & 150MC
Vibrator Power Supply

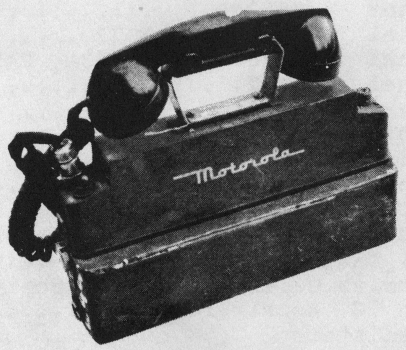

Portable Handie Talkie
.5W @30-50MC, .25W @150MC.
Dry Battery Power Supply

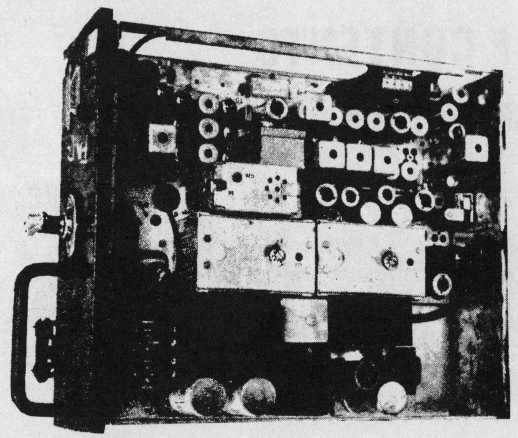

T44A-6A, 450MC, 15W.
Vibrator Power Supply
Passive Preselectors in Receiver

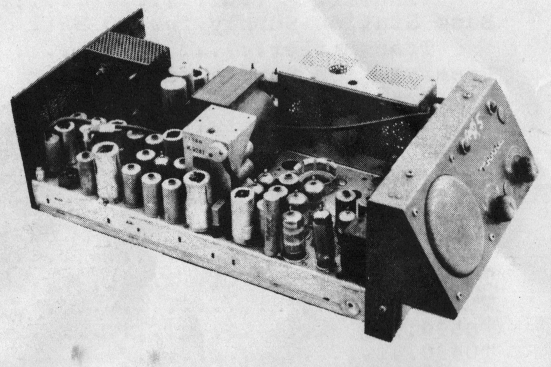

Unichannel 41-V Front Mount
10W 30-50MC & 150MC
Vibrator Power Supply

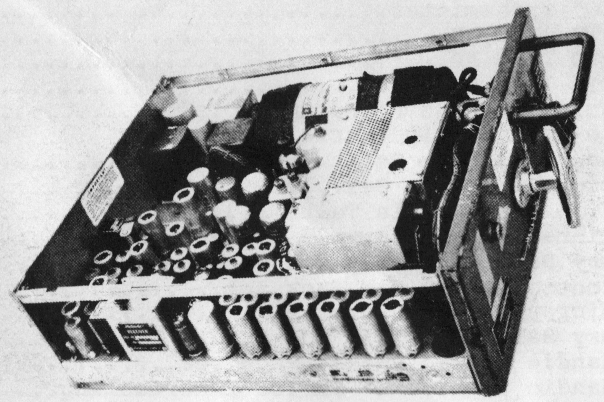

FMTR-140D, 30-50MC, 60W.
Dynamotor Power Supply
Sensicon A receiver

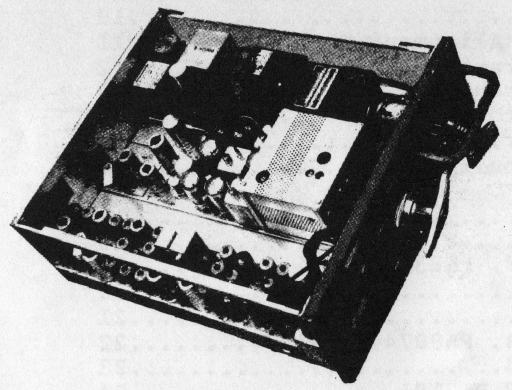

FMTR-80D 30-50MC 30W
Dynamotor Power Supply
Sensicon A receiver

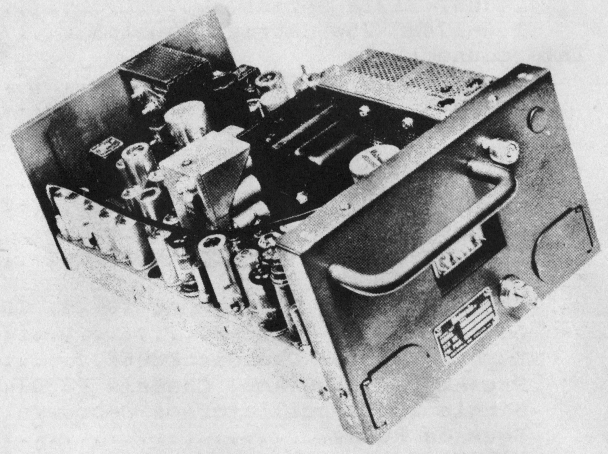

Unichannel 41-V Rear Mount
10W 30-50MC & 150MC
Vibrator Power Supply

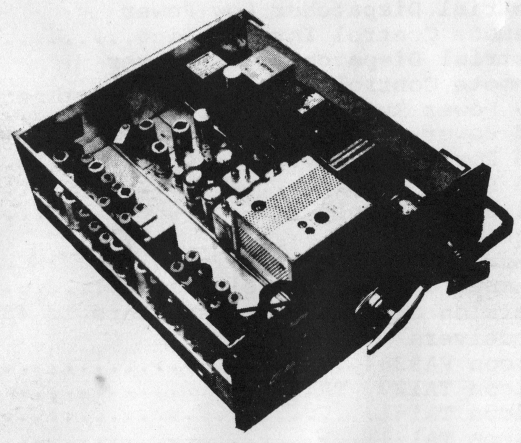

FMTR-80D 30-50MC 30W
Dynamotor Power Supply
Unichannel receiver

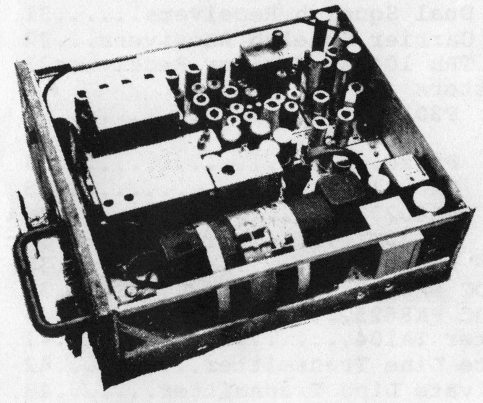

FMTRU-140D 150MC, 60W
Dynamotor Power Supply
Sensicon A receiver



30-50MC & 150MC
Unichannel D Receiver Strip

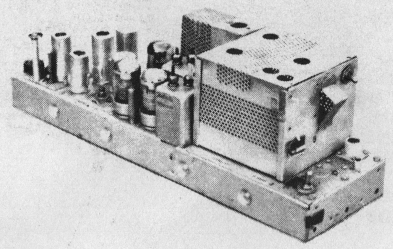

30W 150MC Transmitter
Appearance of 30-50MC Unit Similiar

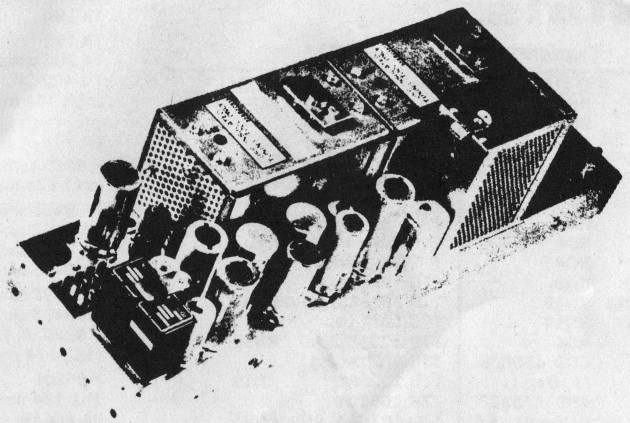

T44A Transmitter

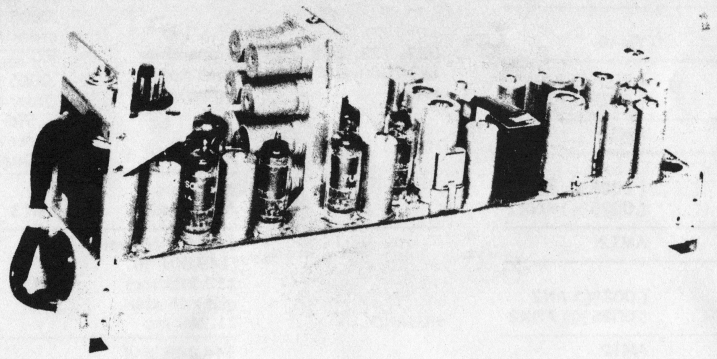

30-50MC & 150MC
Unichannel C Receiver Strip

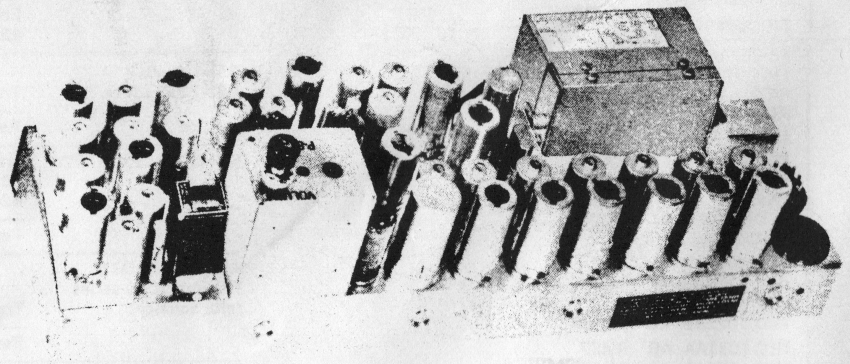

30-50MC Sensicon A Receiver Strip

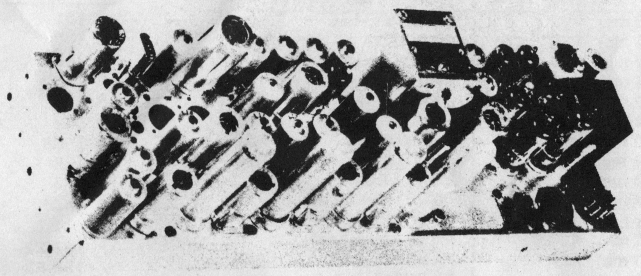

450MC Sensicon Receiver Strip

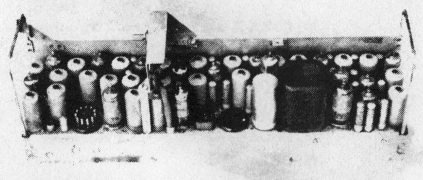

30-50MC & 150 MC
Dispatcher Receiver Strip

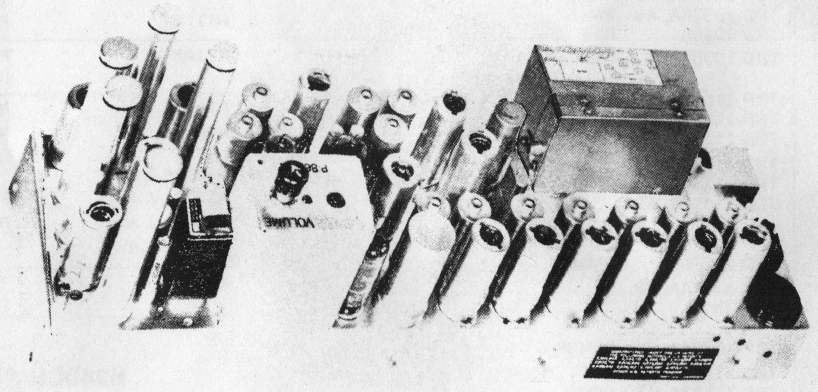

150MC Sensicon A Receiver Strip

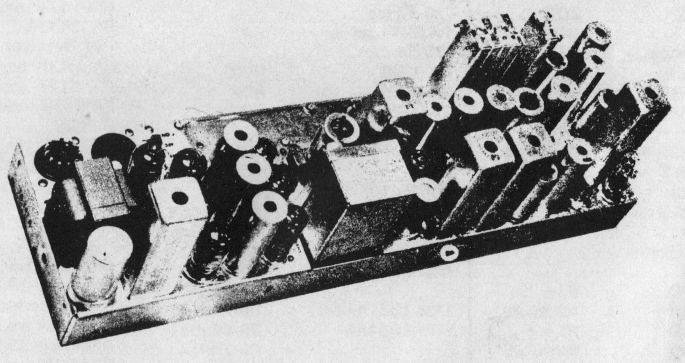

450MC Sensicon Receiver Strip
Note passive preselectors

crystals

Transmitters (25-54 MC)

CHASSIS NO.	CRYSTAL TYPE	CHASSIS NO.	CRYSTAL TYPE
TA 104	RN3	PA 8625B	RO4
TA 105	RN3	PA 8671 series	RO4
TA 130	RN3	PA 8672 series	RO4
TA 169	RN3	PA 8673 series	RO4
TA 179	RN3	PA 8691 series	RO4
TA 180	RN3	PA 8692 series	RO4
TA 181	RO4	PA 8693 series	RO4
TA 193	RO4	P 9030 series	R10
TA 194	RO4	P 9050 series	R10
TA 200	RN3	TTB 1011 to	
TA 201 T series	RN19	TTB 1016AA, AB	RN3
TA 202 series	RN19	TTB 1011 to	
PA 7203B	RO4	TTB 1015AC, AD	RN19
P 8020	48C 475808	TTB 1021AG to	
25-44 mc	(1 freq.)	TTB 1026AG	RN19
form. #1 *	48C 475327	TTB 1031 to	
	(2 freq.)	TTB 1036AA, AB	RN3A
P 8020	48C 475808	TTB 1031 to	
30-50 mc	(1 freq.)	TTB 1036AC, AD	RN19A
form. #2 *	48C 475327	TTB 1041 to	
	(2 freq.)	TTB 1046AA, AB	RN3A
P 8620	SFMT3	TTB 1041 to	
P 8620B	RO6	TTB 1046AC, AD	RN19A

Receivers (25-54 MC)

CHASSIS NO.	CRYSTAL TYPE	CHASSIS NO.	CRYSTAL TYPE
TA 108 (25-30 mc)	R29	PA 8633 series	R02
TA 108 (30-54 mc)	R28	PA 8633A	R32
TA 111 (25-30 mc)	R29	(#2 Control	
TA 111 (30-54 mc)	R28	Receiver)	
TA 111A (25-30 mc)	R29	P 8658 series	ZO2
TA 111A (30-54 mc)	R28	PA 8663 series	RO2
TA 111B (25-30 mc)	R29	PA 9034	RO8
TA 111B (30-54 mc)	R28	PA 9034A, B, C,	R16
TA 111C (25-40 mc)	RM14	& F (25-30 mc)	
TA 111C (40-54 mc)	RM15	(40-50 mc) only	
TA 162 (25-30 mc)	R29	PA 9034A, B, C, &	R18
TA 162 (30-54 mc)	R28	F (30-40 mc) only	
TA 162A (25-30 mc)	R29	PA 9074	ZO4
TA 162A (30-54 mc)	R28	PA 9074A, B & C	ZO6
TA 164 (25-30 mc)	R29	(25-30 mc)	
TA 164 (30-54 mc)	R28	PA 9074A, B & C	ZO7
TA 164A (25-30 mc)	R29	(30-40 mc)	
TA 164A (30-54 mc)	R28	PA 9074A, B & C	ZO6
TA 165 (25-30 mc)	R29	(40-50 mc)	
TA 165 (30-54 mc)	R28	PA 9137A	RO2
TA 189	RO2	PA 9145	RO2
TA 189A series	RM21	PA 9146	RO2
(25-40 mc)		P 9181	ZO2
TA 189A series	RM22	PA 9219A	RO2
(40-54 mc)		PA 9244 series	R25
TA 189-R2	ZO2	(25-30 mc)	
TA 192	RO2	PA 9244 series	R22
P 8028 series	A14	(30-54 mc)	
(25-44 mc)	form. #1 *	PA 9265	RO2
P 8028 (39-50 mc)	A14	PA 9266	RO2
Converted from	form. #2 *	PA 9273	RO2
25-44 mc	A14	WE 9273	RO2
P 8028C (25-44 mc)	form. #1 *	TRB 1050AA	RM21
P 8116A & B	A14		25-40 mc
(25-44 mc)	form. #1 *	TRB 1050AB	RM22
P 8116A & B	A14	TRB 1060AA, AB	40-50 mc
(39-50 mc)	form. #2 *	TRB 1071 to	RM/RP14
Converted from		TRB 1074AA, AB,	25-40 mc
25-44 mc		AC, AD, AE, AF, AH	RM/RP15
P 8116C, D	R14		40-54 mc
(25-44 mc)	form. #4*	TRB 1081AA to	RM/RP14
P 8116C, D	R14	TRB 1084AA	25-40 mc
(39-50 mc)	form. #5*		RM/RP14
Converted from			40-54 mc
25-44 mc	RO2	TRB 1091AA to	RM/RP14
PA 8619B	R14	TRB 1094AA	25-40 mc
P 8628 series			RM/RP15
(25-50 mc)	R14		40-54 mc

30-40mc form #2
40-50mc form #3

Transmitters (144-174 MC)

CHASSIS NO.	CRYSTAL TYPE	CHASSIS NO.	CRYSTAL TYPE
TA 139 series	RS1	TTD 1000AA, AB,	
TA 170 series	RS1	AC, AD	RN1
TA 190	RO3	TTD 1020AA	RN1 6V
TA 192	RO3		RN1A 12V
TA 205 series	RS1	TTD 1040AA, AB	RN1
TU 402-C4	ASLX-1	TTD 1060AA, AB,	
(152-174 mc)		AC, AD	RN1A
TTD 1060 series	RN1A	TTD 1070AA, AB,	
PA 7291C	RO3	AC, AD	RO3A
P 8320 series	SFMT-1	TTD 1080AA	RO3
(152-174 mc)		TTD 1090AA, AB,	
PA 8461 series	RO3	AC, AD, AE, AF, AG	RO3
PA 8462 series	RO3	TTD 1100A	RO3
PA 8463 series	RO3	TTD 1120AA	RN1A
PA 8491 series	RO3	TTD 1140AA, AB	RN1
PA 8492 series	RO3	TTD 1240AA	RN1 6V
PA 8493 series	RO3		RN1A 12V
P 8520, A, B	SFMT-1	TTD 1320AA, AB,	
(152-174 mc)		AC, AD	RO3A
P 8520E	RO5	TTD 1330AA	RO3
152-174 mc)		TTD 1340AA, AB,	
PA 8664B	RO3	AC, AD	RO3
PA 8665 B	RO3	TTD 1350AA	RO3
P 9020 series	RO9	TTD 1370AA,	ZNN1A
P 9040 series	RO9	AB, AC	
		TTD 1137AD	ZNN1-1A
		TTD 1380AA, AB	ZNN1-1A

Receivers (144-174 MC)

CHASSIS NO.	CRYSTAL TYPE	CHASSIS NO.	CRYSTAL TYPE
TA 101	R27	PA 9073A & B	ZO5
TA 140	R27	(152-174 mc)	
TA 140A	R27	PA 9147	RM16
TA 140B	RM10	PA 9148	RM16
TA 161	R27	(144-174 mc)	
TA 163	R27	PA 9243 series	R21
TA 163A	RM10	PA 9267	RM16
TA 178	R27	PA 9268	RM16
TA 182	R27	TRD 1040AD	RM27
TA 182A	RM10	(150-162 mc)	
TA 191	RM16	TRD 1011AB, AD	
TA 191-R2	ZM16	TRD 1012AB, AD	RM10
TA 198-R3	RM10	TRD 1021AB, AD	
TA 199-R4	RM10	TRD 1022AB, AD	RM10A
TA 206	RM10	TRD 1031AA, AB	RM27
PA 7250 series	ZM16	TRD 1032AA, AB	RM16
PA 7251 series	ZM16	TRD 1031AC, AD	ZM27
PA 7254 series	RM16	TRD 1032AC, AD	ZM16
PA 7265 series	RM16	TRD 1041AA, AB	RM27
P 8328 & A	R14	TRD 1042AA, AB	RM16
(152-162 mc)	form. #7 *	TRD 1041AC, AD	ZM27
P8328B&C	R14	TRD 1042AC, AD	ZM16
(152-162 mc)	form. #8 *	TRD 1051AA, AB	RM27
PA 8433 series	RM16	TRD 1052AA, AB	RM16
(144-174 mc)		TRD 1080A	R15
PA 8433A	RM17	TRD 1090A	R15 or R38
(#2 Receiver only)			for shifted IF
PA 8438 series	RM16	TRD 1100A	RM27
PA 8443 series	RM16	TRD 1111AD	RM10 6V
PA 8476 series	ZM16	TRD 1112AD	RM10A 12V
P 8528	R14	TRD 1121AD	
(152-162 mc)	form. #8 *	TRD 1122AD	RM10
Before July 1949		TRD 1151AA, AB,	
P 8528 series	R14	AC, AD, AE,	
(152-159 mc)	form. #8 *	AF, AH	
After July 1949		TRD 1152AA	RM10
P 8528 series	R14	TRD 1171AA, AB,	
(159-166 mc)	form. #9 *	AC, AD, AE,	
After July 1949		AF, AH	
P 8528 series	R14	TRD 1172AA	RM10A
(166-174 mc)	form. #10 *	TRD 1181AA, AB	
After July 1949		TRD 1182AA, AB	RM10
PA 9033	RO7	TRD 1260AA, AB	RM10
(152-174 mc)		TRD 1311AB, AD	
PA 9033A, B & F	R15	TRD 1312AB	RM10A
PA 9073	ZO3		
(152-174 mc)			

Industrial "Dispatcher" and Portable Radios (25-54 MC)

MODEL NO.	DESCRIPTION	CRYSTAL TYPE
FHTR, FPTR series	25-30 mc	CO6
	Transmitter	CO4
	Receiver	
H11, P11 series	30-54 mc	
	Transmitter	CO5
	Receiver	CO3
H21-1 to -15	Transmitter	AN2
H21-1000 series	Receiver	AM12
H21-3000 series	Transmitter	
	25-42 mc	AB2
	42-54 mc	AN2
	Receiver	AM12
H21DCN Series	Transmitter	
	25-54 mc	ABS-2
	Receiver	
	25-42 mc	YM45
	Receiver	
	42-54 mc	YM46
P21,31DDC Series	Transmitter	AB2
	Receiver	
	25-42 mc	YM45
	Receiver	
	42-54 mc	YM46
P31-1 to -6		(.002%) AN2
P31-1000 series	Transmitter	(.0025%) ANX2
	Receiver	AM12
P31-3000 series	Transmitter	
	25-42 mc	(.0025%) ABX2
	42-54 mc	(.0025%) ANX2
	Receiver	AM12
All D21-T21-D31-T31 and 1000 series (std. squelch)		(.002%) AN2
	Transmitter	(.0025%) ANX2
	Receiver	AM12
D-21-T21-D31-3000 series (private line)	Transmitter	
	(25-42 mc)	(.0025%) ABX2
	(42-54 mc)	(.0025%) ANX2
	Receiver	AM12
H01ANC	Pocket Receiver	
	(25-42 mc)	YM14
	(42-54 mc)	YM15
H11NBC	Pocket Transmitter	AB2
H21ANC	Pocket Transmitter	
	(25-54 mc)	AN2
N1012A	Bell Boy	
N1013A	Receiver	
N1072A & AV		YSW31
N1073A & AV	Pageboy	
N1082A & AV	Receiver	
N1083A & AV		
X11-1A	"Handie-Microtalkie" Unit (30-42 mc)	CO7

H24DCN "Handie-Talkie" Radios

DESCRIPTION		CRYSTAL
Receiver	406-420 mc	NLE6031A
	450-470 mc	NLE6032A
Transmitter	406-470 mc	NLE6040A

Industrial "Dispatcher" and Portable Radios (144-174 MC)

MODEL NO.	DESCRIPTION	CRYSTAL TYPE
FHTRU, FPTRU series	Transmitter	CO1
H13, P13 series	Receiver	CO2
H23-1 to -16	Transmitter (See note below)	For .0025% stability order ANI
P33-1 to -6		
H23-1000 series		For conversion to .0005% stability order NED 6001A
D23-1, -4 -10		
T23-1, -4		
D33-1, -4, -7, -10		For replacement of .0005% (type VNI xtal) order NED 6000A
T33-1, -4, -7		
	Receiver (all models)	AM13
H23DCN Series	Transmitter	YN19
	Receiver	YM35
H23DEN Series	Transmitter	NLD6230A
P23DEN Series	Receiver	YMW35
P33DEN Series		
P23,33DDC Series	Transmitter	NLD6200A
	Receiver	YM35
D23, T23, D33, P33 T33-1000 and 3000 series	Transmitter (See note Below)	For conversion to .0005% stability order NED 6001A
		For replacement of .0005% (Type VNI xtal) Order NED 6000A Std. Squelch Order NED 6002A Dual Squelch
	Receivers (all models)	AM13
H03ANC	Pocket Receiver (149.001 to 152.270 mc) using IF xtal 11.245 mc	YM35
	144-149 and 152.3-174 mc using IF xtal 11.545 mc	YM29
H03ANC-1000B & C Series	144-148.5 mc using IF Xtal 11.545 mc	YM29
	148.5-174 mc using IF Xtal 11.245 mc	YM35
H03BNC Series	"Bellboy" Receiver	YSW82
H13NBC H23ANC	Pocket Transmitter	AN1
N1010A & AV	"Bellboy"	
N1011A & AV	Receiver	
		YVMW72
N1074A & AV	"Pageboy"	
N1075A & AV	Receiver	
N1070A & AV		
N1071A & AV	"Pageboy"	YSW82
N1080A & AV	Receiver	
N1081A & AV		
X13T 1 & 2	"Handie-Microtalkie" Unit	CO1

NOTE: NED 6001A crystal kit contains type VN1 crystal and components for .0005% stability with instructions for conversion to high stability oscillator.

CRYSTAL FORMULAS

LEGEND:

f_x = crystal frequency
f_c = carrier frequency
f_1 = 1st IF frequency
All frequencies in megacycles.

"R" and "Z" types are oven crystals available with 6, 12, and 24 VDC heaters.

CRYSTAL NO.	CRYSTAL	CRYSTAL FORMULA
SFMT-1	3.00000-3.62500	$f_x = \frac{f_c}{48}$
SFMT-2	1.000-13.000	$f_x = f_c = 5^n$ (Note 1)
SFMT-3	1.56200-3.12500	$f_x = f_c/16$ $f_x = f_c/36$
FMT-5 1-freq. pt. no. 48C475808	.93750-	$f_x = \frac{f_c}{24}$
2-freq. pt. no. 48C475327	1.56250	$f_x = \frac{f_c}{32}$
SFMT-6	6.30000-7.25000	$f_x = f_c/24$
A01	4.40000-4.45000	I.F. Crystal
A04	5.95500	I.F. Crystal
A05	3.35500	I.F. Crystal
A06	1.50000-6.00000	$f_x = f_c + .455$
A07	8.45700	I.F. Crystal
A08	4.75700	I.F. Crystal
A09	8.45500	I.F. Crystal
A10	4.75500	I.F. Crystal
A11	1.70000-6.00000	(Note 4)
A12	5.45500-6.45500	(Note 2)
A13	3.05500-3.65500	(Note 3)

CRYSTAL NO.	CRYSTAL	CRYSTAL FORMULA
A14	5.17500-11.42500	#1 $f_x = \frac{f_c - 4.3}{4}$ #2 $f_x = \frac{f_c - 4.3}{5}$ 3 $f_x = \frac{f_c - 4.3}{10}$
A15 (Note 4)	28.35393-32.92890	—
A16 (Note 4)	8.00000-10.00000	—
AM (Note 4)	10.00000-75.00000	—
AM-9	28.42500-32.99600	$f_x = \frac{f_c - 8.045}{14}$
AM-12	24.54500-53.54500	$f_x = f_c - .455$
AM-13	28.70900-34.70900	$f_x = \frac{f_c - .455}{5}$
AM-18	25.56700-27.75000	$f_x = \frac{f_c - 72}{32}$
AN (Note 4)	1.25000-16.00000	—
ANL	2MC to 6M 10MC-75MC	—
AN-1	6.00000-7.25000	$f_x = \frac{f_c}{24}$
AN-2	1.56250-3.37500	$f_x = \frac{f_c}{16}$
AQL	.280-.500	—
AQLS	.280-.800	—
AQS	.280-.800	—
AUL	6-10MC	—
AULX	6-10MC	$f_c = 455KC$
AS (Note 4)	1.25000-16.00000	—

CRYSTAL NO.	CRYSTAL	CRYSTAL FORMULA
ASLX-1	6333.3 7250.0	$f_x = \frac{f_c}{24}$
C01	4.75000-5.43750	$f_x = \frac{f_c}{32}$
C02	29.92000-35.22000	$f_x = \frac{f_c - 2.1}{5}$
C03	4.65000-8.65000	$f_x = \frac{f_c - 2.1}{6}$
C04	6.77500-8.02500	$f_x = \frac{f_c - 2.1}{4}$
C05	1.66667-3.00000	$f_x = \frac{f_c}{18}$
C06	1.38900-1.66667	$f_x = \frac{f_c}{18}$
C07	1.66667-2.33333	$f_x = \frac{f_c}{18}$
G01	8.61500-10.26200	$f_x = \frac{f_c + .455}{17}$
G02	6.09100-9.07580	25-30 MC $f_x = \frac{f_c + .455}{4}$ 30-40 MC $f_x = \frac{f_c + .455}{5}$ 40-50 MC $f_x = \frac{f_c + .455}{6}$
G03	12.45500	I.F. Crystal
G04	5.95500	I.F. Crystal
G05	21455	I.F. Crystal
G06	12455	I.F. Crystal
R02	9.30000-18.9666	$f_x = \frac{f_c + 2.9}{3}$
R03	5.41666-7.25000	$f_x = \frac{f_c}{24}$
R04	1.56250-3.37500	$f_x = \frac{f_c}{16}$

CRYSTAL NO.	CRYSTAL	CRYSTAL FORMULA
R05	3.16666-3.62500	$f_x = \frac{f_c}{48}$
R06	1.56250-3.12500	$f_x = \frac{f_c}{16}$
R07	29.30000-33.70000	$f_x = \frac{f_c - 5.5}{5}$
R08	9.30000-18.96666	$f_x = \frac{f_c + 2.9}{3}$
R09	6.00000-7.25000	$f_x = \frac{f_c}{24}$
R10	1.56250-3.37500	$f_x = \frac{f_c}{16}$
R11	2.50000-5.00000	Fundamental 5-8 (overtone) 30-34 (overtone)
R12	2.00000-2.11111	$f_x = \frac{f_c}{36}$
R13	25.83333-27.16666	$f_x = \frac{f_c - 5.5}{3}$
R14 Specify chassis no. and fundamental crystal frequency when ordering.	5.00000-12.00000	#1 $f_x = \frac{f_c - 2.7}{3}$ #2 $f_x = \frac{f_c - 2.7}{4}$ #3 $f_x = \frac{f_c - 2.7}{5}$ #4 $f_x = \frac{f_c - 2.7}{4}$ #5 $f_x = \frac{f_c - 2.7}{5}$ #6 $f_x = \frac{f_c + 1.7}{13}$ #7 $f_x = \frac{f_c - 3.8}{16}$ #8 $f_x = \frac{f_c + 1.7}{17}$ #9 $f_x = \frac{f_c + 1.775}{17}$ #10 $f_x = \frac{f_c + 1.85}{17}$

CRYSTAL NO.	CRYSTAL	CRYSTAL FORMULA
R15	27.20000-33.20000	$f_x = \frac{f_c - 8.}{5}$
R16	9.76666-18.10000	$f_x = \frac{f_c + 4.3}{3}$
R17	37.00000-38.00000	$f_x = \frac{f_c - f_r}{8}$ (Note 6)
R18	12.85000-17.85000	$f_x = \frac{f_c - 4.3}{2}$
R19	38.00000-39.00000	$f_x = \frac{f_c - f_r}{8}$ (Note 6)
R20	25.43333-26.76666	$f_x = \frac{f_c + 4.3}{3}$
R21	27.20000-33.20000	$f_x = \frac{f_c - 8}{5}$
R22	11.43333-19.43333	$f_x = \frac{f_c + 4.3}{3}$
R24	16.66666-20.00000	$f_x = \frac{f_c}{24}$
R25	9.76666-11.43333	$f_x = \frac{f_c + 4.3}{3}$
R26	25.43333-26.76666	$f_x = \frac{f_c + 4.3}{3}$
R27	26.40000-32.40000	$f_x = \frac{f_c - 12}{5}$
R28	11.83333-19.83333	$f_x = \frac{f_c + 5.5}{3}$
R29	10.16666-11.83333	$f_x = \frac{f_c + 5.5}{3}$
R32	9.30000-18.96666	(Note 3)
R35	11.83 to .1583	$\frac{f_c + 5.5}{3}$
R37	4.12037-4.44444	$f_x = \frac{f_c}{144}$
RM-10	26.40000-32.40000	$f_x = \frac{f_c - 12}{5}$
RM-14	30.50000-45.50000	$f_x = f_c + 5.5$
RM-15	34.50000-48.50000	$f_x = f_c - 5.5$
RM-16	24.90000-33.70000	$f_x = \frac{f_c - 5.5}{5}$

CRYSTAL NO.	CRYSTAL	CRYSTAL FORMULA
RM-17	10.00000-75.00000	(Note 2)
RM-21	27.900 42.900	$f_c + 2.9$
RM-22	37.100 51.100	$f_c - 2.9$
RM-23	.....	(Note 7)
RM-24	45.5 55.5	$f_c + 5.500$
RM-27	31.833-33.8333	$\frac{f_c + 5.5}{5}$
RM-28	.....	(Note 7)
RN-1A	6.000 7.2500	$f_x = \frac{f_c}{24}$
RN-3	2.08333-4.50000	$f_x = \frac{f_c}{12}$
RN-19	1.38888-3.00000	$f_x = \frac{f_c}{18}$
RN-20	4.12037-4.44444	$f_x = \frac{f_c}{216}$
RN-31A	6.09100-7.61375	$f_x = \frac{f_c + .455}{4}$
RN-32A	6.09100-10.0110	$f_x = \frac{f_c + .455}{5}$
RN-33A	9.07580	$f_x = \frac{f_c + .455}{6}$
RN-34A	8.61500-10.2620	$f_x = \frac{f_c + .455}{16}$
RS (Note 4)	1.25000-16.00000	—
RS-1	6.00000-7.25000	$f_x = \frac{f_c}{24}$
VN1-	ORDER NED6000A	
YM-14	30.5000-47.5000	$f_c + 5500$
YM-15	36.500-48.500	$f_c - 5500$
YM-29	44.000-54.000	$\frac{f_c - 12000}{3}$
YM-35	45.767-46.856	$\frac{f_c - 11.700}{3}$
YN	5.955	I.F. XTAL
YN	11.545	I.F. XTAL
YN	11.245	I.F. XTAL

All other "D" type Crystals are replaced by "R" type with equivalent numbers.

NOTE 1. ^{n} = 7, 8, 9, 30, 31, or 32 for Frequency Monitor. Specify Receiver Control Frequency when ordering.

NOTE 2. RM-17 and A12 crystals are used in No. 2 receiver as follows: (RM-16 crystal is used with tabulated formula for No. 1 receiver of 2-receiver models.)

a. For frequency separations of less than 500 kc;
RM-17 is $f_x = \frac{F_1 - 5.5}{5}$
A12 is $f_x = F_2 - F_1 + 5.955$ mc.

b. For frequency separations 5.0 to 5.5 mc;
RM-17 is $f_x = \frac{F_1 - 6.0}{5}$ A12 is $f_x = 6.455$ mc.

c. For frequency separations 5.5 to 6.0 mc;
RM-17 is $f_x = \frac{F_1 - 5.0}{5}$ A12 is $f_x = 5.455$ mc.

NOTE 3. R32 and A13 crystals are used in No. 2 receiver as follows: (R32 crystal is used with tabulated formula for No. 1 receiver of 2-receiver models.)

a. For frequency separations of less than 300 kc;
R32 is $f_x = \frac{F_1 + 2.9}{3}$ A13 is $f_x = F_1 - F_2 + 3.355$ mc.

b. For frequency separations 2.6 to 2.9 mc;
R32 is $f_x = \frac{F_1 + 3.2}{3}$ A13 is $f_x = 3.655$ mc.

c. For frequency separations 2.9 to 3.2 mc;
R32 is $f_x = \frac{F_1 + 2.6}{3}$ A13 is $f_x = 3.055$ mc.

NOTE 4. Specify the carrier frequency of the equipment used in and the crystal frequency stamped on the crystal or the crystal oven.

NOTE 5. "T" Series crystals are used in "Z" and "ZM" Series two-frequency crystal assemblies respectively. They can be ordered without returning oven to enable the chassis to remain operative on the other frequency.

NOTE 6. f_r is the frequency of the receiver used with the converter.

NOTE 7. These crystals are used in 2 receiver base stations. When ordering specify:

a. Operating frequency desired and frequency of IF crystal.

b. Operating frequency of other receiver and frequency of IF crystal.

2 FREQUENCY OVEN ASSEMBLIES (Z SERIES)

CRYSTAL ASSEM. NO.	CRYSTAL NO. (Note-5)	RANGE (in mc) CRYSTAL	CRYSTAL FORMULA
Z02	T02	9.30000-18.66666	$f_x = \frac{f_c + 2.9}{3}$
Z03	T03	29.30000-33.70000	$f_x = \frac{f_c - 5.5}{5}$
Z04	T04	9.30000-18.96666	$f_x = \frac{f_c + 2.9}{3}$
Z05	T05	28.80000-33.20000	$f_x = \frac{f_c - 8}{5}$
Z06	T06	9.76666-18.10000	$f_x = \frac{f_c + 4.3}{3}$
Z07	T07	12.85000-17.85000	$f_x = \frac{f_c - 4.3}{2}$
ZM16	T01	26.70000-33.70000	$f_x = \frac{f_c - 5.5}{5}$

REPLACEMENT LISTINGS FOR NON-CURRENT CRYSTALS

OBSOLETE CRYSTAL NO.	REPLACED BY CURRENT CRYSTAL NO.	OBSOLETE CRYSTAL NO.	REPLACED BY CURRENT CRYSTAL NO.	OBSOLETE CRYSTAL NO.	REPLACED BY CURRENT CRYSTAL NO.	OBSOLETE CRYSTAL NO.	REPLACED BY CURRENT CRYSTAL NO.
BM16	T01	48A16522	Obsolete	800-FT243 (48A84005)	A14	FMT-1 (48B85327)	SFMT-1
D01	RM16	48A83115	Obsolete				
D31	RM17	48A83128	Obsolete	801 (48C85412)	R14	FMT-2 (48B86610)	SFMT-2
D34	RN3	48A83182	Obsolete				
D36	R37	48B82418	A14/with adapter (58A83532)	801A (48K86674)	R14	FMT-3 (48K86728)	SFMT-3
E01	ZM16	48B82524	FMT-5 (48C475808)	802 (48C82426)	C03	FMT-4 (48C82427)	C05
E02 to E07	Z02 to Z07	48B893644	SFMT-2	804 (48B890013)	A01	FMT-6 (48C881077)	SFMT-6
E08	ZM16	48K82417	A-11/with adapter (58A83532)	180-G (48B81946)	FMT-5 (48C475808)	FMT (48B82527)	FMT-5 (48C475808)
EM16	ZM16	800 (48B483539)	A-11	AR3 (48B81486)	FMT-5 (48C475808)	FMT (48B83851)	FMT-5 (48C475327)
F02 to F07	T01 to T07	800 (48B83765)	A-11	B5R (48B81487)	A14/with adapter (58A83532)	FT243 (48A50647)	A14
TX1 TX2	AQLS or AQS AQLS or AQS	800 (48B83998)	A-11	B5R (48A81488)	A-11/with adapter (58A83532)	H16 (48A808465)	Obsolete

406-470 MC "Motrac" Radio

DESCRIPTION	CRYSTAL TYPE	
Transmitter 406-470 mc	1-Freq.	KNN-4A
	2-Freq.	KNN-4-4A
Receiver 406-420 mc	1-Freq.	ZMM-47A
	2-Freq.	ZMM-47-47A
Receiver 450-470 mc	1-Freq.	ZMM-48A
	2-Freq.	ZMM-48-48A

406 to 470 MC U44BBT Series Equipment Transmit and Receiver Crystal in Same Oven

DESCRIPTION	CRYSTAL INSERTS	ORDER
Transmitter	JM1	KMM-140A
Receiver (406-420 mc)	JM40	
Transmitter	JM1	KMM-126A
Receiver (450-470 mc)	JM26A	

Receivers (400-470 MC)

CHASSIS NO.		CRYSTAL TYPE	CHASSIS NO.		CRYSTAL TYPE
TA 109	Control	A15	TA 222	Control	RM
	I F	A16		I F	AN
TA 129	Control	A15	TA 223	Control	RM
	I F	A16		I F	AN
TA 141	Control	AS	TA 229	Control	RM9
	I F	AN		I F	AN
TA 141A	Control	AM	PA 9343	Control	A15
	I F	AN		I F	A16
TA 143	Control	AS	PA 9344	Control	A15
	I F	AN		I F	A16
TA 146	Control	AS	TRE 1000AA, AE	Control	RM
	I F	AN		IF	AN
TA 183	Control	AM9	TRE 1010AA	Control	RM9
	I F	AN		IF	AN
TA 183A	Control	AM9	TRE1020AA	Control	KMM26A
	I F	AN		I F	G05
TA 185	Control	AM9	TRE1021AA	Control	KMM-10A
	I F	AN		I F	G05
TA 197	Control	AM	TRE1020AC	Control	KMM26-26A
	I F	AN		I F	G05
TA 216	Control	RM	TRE1021AC	Control	KMM40-40A
	I F	AN		I F	G05
TA 219 Z	Control	RM	TRE1020AE	Control	KMM26A
	I F	AN		I F	G05
TA 220 Z	Control	RM	TRE1020AG	Control	KMM26-26A
	I F	AN		I F	G05

Alert Monitor Receivers (144-174 MC)

MODEL NO.	CRYSTAL TYPE	
L03F—1 to 5	G01	
LO3FNB Models	G01 Wideband	RN34A Split Channel

Alignment Crystals for Use in Motorola Test Sets and Generators

P8501	AQS	Shipped with Socket Adapter 51A821802
P8501A & B	AQLS	For IF Alignment (.280 to .500)
TU 546 or S1056A Test Set	AQL	For IF Alignment (.280 to .500)
TK589 or SLN 6057A	AUL	For Carrier Alignment (48-960 MC) For IF Alignment (6 to 10 MC Only)
Peaking Generator	AULX	For use with Deviation Meter
	ANL	For IF Alignment 2 MC to 6 MC 10 MC to 75 MC

Crystals for Business "Dispatcher" Radio

MODEL	DESCRIPTION	CRYSTAL TYPE
D31BMT Series	Transmitter 1-Freq.	ZNN-3A
	Transmitter 2-Freq.	ZNN-3-3A
	Receiver	AM12
D33BMT Series	Transmitter 1-Freq.	ZNN-3A
	Transmitter 2-Freq.	ZNN-3-3A
	Receiver	AM13
D33CMT Series	Transmitter 1-Freq.	ZNN-3A
	Transmitter 2-Freq.	ZNN-3-3A
	Receiver 1-Freq. (136-150.8 mc) 2-Freq.	ZMM-66A ZMM-66-66A
	Receiver 1-Freq. (150.8-174 mc) 2-Freq.	ZMM-50A ZMM-50-50A

Transmitters (400-470 MC)

CHASSIS NO.	CRYSTAL TYPE
TA 110, TA 147, TA 184, TA 204, TU 260, P 9350, PA 9355	R24
TTE 1000AA, AB, AC	R24
TTE 1010AA	R24
TTE 1020AA	RN20

Receivers & Transmitters (890-960 MC)

CHASSIS NO.	CRYSTAL TYPE
TA 144 Transmitter	R37
TA 145 Receiver	AM
TA 210B Transmitter	RN20
TA 211 Receiver	AM18
TTF 1000AA Transmitters	RN20
TRF 1000AA Receivers	AM-18 AN

Alert Monitor Receivers (25-54 MC)

MODEL NO.	CRYSTAL TYPE			
LO1F series (25-54 mc)	GO2		RN31A	(Split Channel)
LO1FNB (25-30 mc)	GO2	(Wide Band)	RN32A	
LO1FNB (30-40 mc)	GO2		RN33A	
LO1FNB (40-50 mc)				

Transmitters, Receivers (72-76 MC)

TRANSMITTER NO.	CRYSTAL TYPE	RECEIVER NO.	CRYSTAL TYPE
P 7220	SFMT3		Form. #6 *
		PA 9102	R13
PA 9110 A	R12	PA 9329	R26
P 7228	R14	TTC 1000AA	R12

Miscellaneous

MODEL NO.	CRYSTAL TYPE
PA 7225 series Monitor	R11
PA 7225 series	SFMT2
PA 7226 series	SFMT2
PA 7226 series Monitor	R11
PA 9077 series (1.6-3.2 mc)	A06

"MOTRAC" RADIO CRYSTALS—25-54 mc

SERIES MODEL NO		1 FREQ.	2 FREQ.	CRYSTAL INSERT
U41HHT A, B, C*, D	Transmitter	ZNN-3A	ZNN-3-3A	HN3
U51HHT A, B, C*, D	Receiver (25-42 MC)	ZMM-14A	ZMM-14-14A	HM14
U71HHT A, B, C*	Receiver (42-54 MC)	ZMM-15A	ZMM-15-15A	HM15
*Except "C" suffixed models "Extender" see below.				
U41HHT "C" "Extender" radio	Transmitter	ZNN-3A	ZNN-3-3A	HN3
U41HHT E	Receiver (25-42 MC)	ZMM-57A	ZMM-57-57A	HM57
U51HHT-C "Extender" radio	Receiver (42-54 MC)	ZMM-58A	ZMM-58-58A	HM58
U51HHT E				

"MOTRAC" RADIO CRYSTALS—136-174 mc

SERIES MODEL NO.		1 FREQ.	2 FREQ.	CRYSTAL INSERT
T43HHT, A, B				
U43HHT A, B, C	Transmitter	ZNN-3A	ZNN-3-3A	HN3
U53HHT A, B	Receiver (136-150.8 MC)	ZMM-39A	ZMM-39-39A	HM39
U63HHT A, B	Receiver (150.8-174 MC)	ZMM-10A	ZMM-10-10A	HM10
All 1000 and 3000 series included.				
T43HHT "C"				
U43HHT-1101C-1111C-1131C-3101C-3111C-3131C				
U43HHT D	Transmitter	ZNN-3-A	ZNN-3-3A	HN3
U53HHT C	Receiver (136-150.8 MC)	ZMM-41A	ZMM-41-41A	HM41
U63HHT C	Receiver (150.8-174 MC)	ZMM-42A	ZMM-42-42A	HM42
All 1000 and 3000 series included.				
U43HHT 1000, 3000 series "E".	Transmitter	ZNN-3A	ZNN-3-3A	HN3
	Receiver (136-150.8 MC)	ZMM-55A	ZMM-55-55A	HM55
	Receiver (150.8-174 MC)	ZMM-56A	ZMM-56-56A	HM56

ANTENNA ROD CUTTING CHART

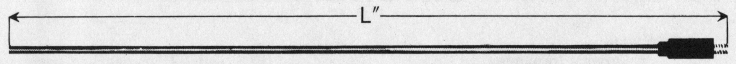

MOBILE RODS FOR SPRING BASE ANTENNAS

ROD LENGTH IN INCHES	FREQ. MCS.	WITH LOADING COIL FREQ. MCS.	ROD LENGTH IN INCHES	FREQ. MCS.	WITH LOADING COIL FREQ. MCS.	ROD LENGTH IN INCHES	FREQ. MCS.	WITH LOADING COIL FREQ. MCS.
96	30.000	25.000	81	35.750	28.250	66	43.400	
95	30.100	25.370	80	36.100	28.500	65	44.000	
94	30.500	25.500	79	36.600	28.750	64	44.750	
93	31.000	25.750	78	37.000	29.000	63	45.300	
92	31.250	26.000	77	37.500	29.100	62	46.000	
91	31.750	26.250	76	38.000	29.300	61	46.700	
90	32.100	26.350	75	38.400	29.500	60	47.250	
89	32.500	26.500	74	38.800	29.600	59	48.000	
88	32.900	26.750	73	39.500	29.999	58	49.250	
87	33.250	27.000	72	40.000		57	50.250	
86	33.700	27.100	71	40.500		56	51.250	
85	34.100	27.300	70	41.000		55	52.250	
84	34.500	27.500	69	41.600		54	53.500	
83	34.800	27.750	68	42.250		53	54.500	
82	35.250	28.000	67	42.750		52.5	55.000	

DYNAMOTORS AND ACCESSORIES

DYNAMOTOR PART NO.	MFGR. NO.	INPUT VOLTS	EQUIPMENT USAGE	ARMATURE PART NO.	MFGR. NO.	INPUT BRUSH*	OUTPUT BRUSH*
59K 81860	617V	6	25-50 MC 30W Deluxe	59K 831395	279-2	39K 837806	39K 83950
59K 84420	617B	12	25-50 MC 30W Deluxe	59K 831396	234-4	39K 85905	39K 83950
59C 81490	VSF630	6	25-50 MC 50W Deluxe	24K 842158	279-2-2	39K 83948	39K 83951
59K 842052	BFS630	12	25-50 MC 50W Deluxe	59K 842053	255-4	39K 842150	39K 83951
59C 483332	624VS	6	25-50 MC 50W Low Drain Deluxe	24K 880131	309-2	39K 837806	39K 83950
59K 842054	624BS	12	25-50 MC 50W Low Drain Deluxe	59K 831396	234-4	39K 85905	39K 83950
59C 85352	4228VS	6	152-162 MC 30W Deluxe	59K 831397	207-2	39K 837806	39K 83950
59K 85487	4228BS	12	152-162 MC 30W Deluxe 25-54 MC 30W	24K 892997	176-4	39K 85905	39K 83950
59C 890909	4228VSC	6	152-174 MC 30W Research 25-54 MC 30W	24K 892996	195-2	39K 837806	39K 83950
59K 892977	4228BSC	12	152-174 MC 30W Research 25-54 MC 30W	24K 892997	176-4	39K 85905	39K 83950
59C 890911	VSF6237	6	152-174 MC 60W Research 25-54 MC 60W	24K 892189	301-2	39K 892192	39K 83951
59C 892978	BSF6237	12	152-174 MC 60W Research 25-54 MC 60W	24K 892998	279-4	39K 892192	39K 83951
59D 840694	4432VBNS	6/12	152-174 MC 30W Research 25-54 MC 60W	59K 840720	195-2-2	39K 837806	39K 83950
59D 840695	TVBS6537	6/12	152-174 MC 60W Research	59K 840721	207-1-2	39K 845229	39K 83951
59D 837805	7138VBNS	6/12	25-54 MC 50W Research "G"	59K 837811	183-138-2-2	39K 837806	39K 83950
59K 845431	6825VBNS	6/12	100 Watt	59K 845432	216-1-2	39K 837806	39K 83950
59K 850582	4228VBNS	6/12	30 Watt	59K 850597	186-2-2	39K 837806	39K 83950
59K 855304	5223VBNS	6/12	60 Watt	59K 855305	216-2-2	39K 837806	39K 83950

*Note: Two required.

BRUSH CAPS AND BRUSH HOLDERS

15K 880128—Brush Cap—30 watt models.....
15K 892195—Brush Cap—60 watt models.....
46K 880129—Brush Holder—input—30 watt.....
46K 880130—Brush Holder—output—30 watt....
46K 892193—Brush Holder—input—60 watt.....
46K 892194—Brush Holder—output—60 watt....
9K 837807—Brush Holder—input 6/12—30, 60, 100 watt
9K 837808—Brush Holder—input 6/12—30, 60, 100 watt
9K 837809—Brush Holder—output 6/12—30, 60, 100 watt .....
9K 837810—Brush Holder—output 6/12—30, 60, 100 watt .....

REPLACEMENT BEARINGS

43K 842156—Bearing for 30 watt models and for 50 watt dynamotors 59C 483332 and 59K 842054 *Two required.

43K 842157—Bearing for 60 watt models and for 50 watt dynamotors 59C 81490 and 59K 842052.

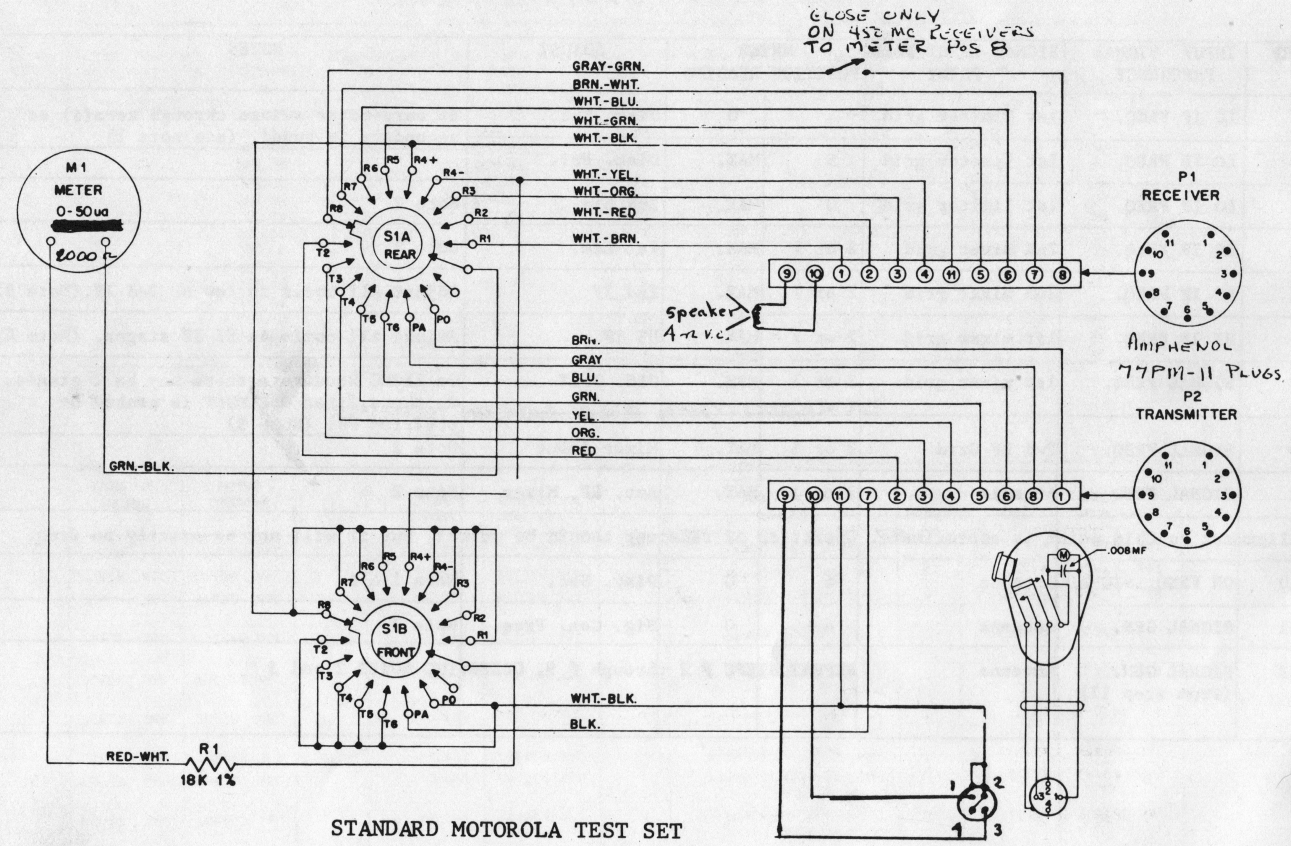

STANDARD MOTOROLA TEST SET

The above diagram shows the test set used to meter the performance of all Motorola receivers and transmitters. With a test set, one may tune and align any Motorola unit by inserting the appropriate test set cord in the 11 pin metering socket on the unit to be aligned.

Meter and test set readings are given on the appropriate schematics throughout the digest.

These values should be used as general guides only, since the actual readings may vary plus or minus twenty per cent due to aging of components, tube conditions, B plus, and many other factors. In general, if the receiver can be brought down to a sensitivity of 0.5-1.0 uv. and the transmitter tuned for nominal rated output, the actual test set reading is not too important.

PREALIGNMENT INFORMATION FOR RECEIVERS

The alignment of any Motorola receiver which incorporates a Permakay filter follows a uniform procedure. This procedure will vary slightly from one model receiver to another in small details such as the identification of tubes and coils, etc. The procedure presented below is general in scope and identifies the point of signal injection and adjustment in terms of stages rather than specific tubes and coils. It therefore is suitable for use with any receiver when proper IF frequencies and signal frequencies are determined from the diagram which closely approximates your receiver.

There are a number of points that you should be concerned with as follows:

1. Some receivers will be found to have IF oscillation and regeneration. This is generally caused by the shield cans in the Permakay filter developing a high resistance to ground due to oxidation developing between the can and the Permakay frame. A piece of #16 wire should be soldered across all the coil cans on the filter and grounded to the filter frame. This is applicable only to filters that are not totally enclosed.
2. When a signal is fed into an FM receiver for alignment purposes, its amplitude should be low enough so that the receiver is not fully quieted. As the set is peaked up, and it becomes more quiet due to limiter action, the test or alignment signal should be attenuated so that a small amount of noise is always audibly coming through the receiver.
3. When aligning any circuit for a peak, vary the test signal amplitude and be sure the limiter reading follows up and down. If the first limiter (test position R2) is saturated use R1, the IF grid metering point.
4. The 455KC IF frequency should be set within 1KC. This centers the discriminator and tuneable low IF circuits into the center of the Permakay filter passband. A frequency meter should be used. Some receivers used a second oscillator crystal whose frequency ended with the digit 7. This 2KC offset was used to reduce ignition noise in the receiver. The low IF should still be set exactly to 455KC. Either IF crystal ending in the digit 5 or 7 may be used in any receiver. Some Motola receivers may have a so called compensator crystal in the second oscillator. They can be identified by a red or black band around the crystal. These crystals were used to correct the receiver frequency if the high frequency oscillator crystal had drifted. The black band is 10KC and the red band crystal is 20KC off from the normal correct frequency. These crystals should be replaced with a standard IF crystal before you attempt to bring the receiver on frequency as it will be impossible otherwise to net the receiver.
5. When peaking the 455KC IF coils, the first or high frequency IF amplifier tube can be removed to reduce the RF noise coming through the receiver. This will permit a sharper peak to be obtained on the 455KC low IF coil adjustment. Once these coils are adjusted, they rarely require realignment. On Motorola 450MC receivers Models P9343, P9344, TA109, and TA129, the discriminator should idle at 1 or 2ua negative after the receiver is completely aligned. If it does not, hold the AFC switch off and tune the discriminator secondary for 2ua of negative idle. This is necessary because positive AFC voltage on the first oscillator reduces its activity. If the discriminator idles on zero or positive, noise will reduce the oscillator activity, and under certain temperature and voltage conditions, the oscillator will cease to operate.

It is possible that some receivers may have a narrow band (5KC) Permakay Filter installed in them. For amateur use, this filter may be too narrow. The effect on receiver operation will be to cause very choppy reception when receiving a wide band signal (15KC). These filters can often be identified by the letter "S" as a subscript on the filter number. They may be replaced with a 15KC wide filter and portions of circuit should be modified to obtain proper operation of the receiver with wide band signals. These modifications are given in the conversion data.

7. It is possible to convert any Unichannel or Sensicon receiver to a two frequency receiver by changing the second oscillator crystal. In most cases this is much easier than the conventional method of wiring in a second first oscillator tube and coil. A small SPDT relay can be used to select the desired crystal. The second oscillator crystal frequency is offset by the amount of the desired second channel, (i.e. 8455KC would receive normal channel, 8515KC would tune receiver to a channel 60KC higher). The second oscillator crystal frequency might have to be shifted up or down depending on whether the first oscillator injects above or below the signal frequency. In general, the receiver can be tuned plus or minus 30KC with no loss of performance.
8. When aligning a receiver that is completely mistuned, it will be necessary to follow step by step the low and high IF alignment procedures. This will also help identify any stages of the receiver that may be inoperative.

If the set is functioning and a signal can be fed through it from the antenna input, the whole receiver can be peaked on a weak carrier frequency signal without recourse to individual High and Low IF alignment procedures. It is not advisable to peak the low IF under these conditions since the inherent receiver noise usually has caused these stages to be saturated. The high IF and input circuits can be peaked provided the signal source is exactly on frequency and can be attenuated down so the receiver's first limiter stage is not saturated.

9. Some receiver oscillator circuits operate with the crystal tuned on the gradual slope side of the crystal response. If these sets are tuned with the oscillator on the sharp side, the oscillator might not start each time the receiver has B Plus applied. It is important that all receivers have properly correlated crystals in order to be tuned on the desired frequency. These crystals may be purchased from any of the commercial sources advertising in the various Ham Magazines. In order to avoid costly disappointments with crystals that will not tune on frequency, you should definitly obtain commercial crystals and specify the chassis number and Motorola crystal type with your order.

ALIGNMENT CHART FOR HIGH BAND SENSICON RECEIVERS

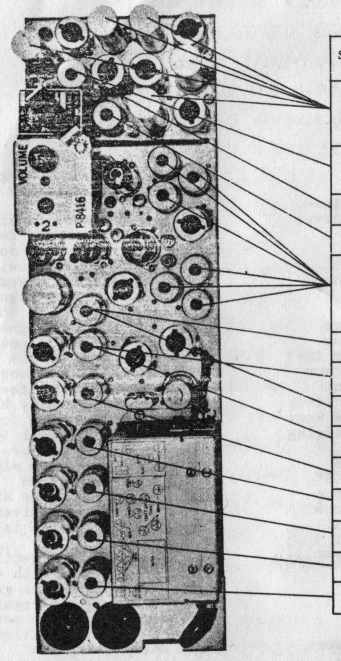

SEQUENCE	METER POSITION	ADJUSTMENT	METER READING	STAGE AND PROCEDURE	text reference
Step 14	2	Pipes TU 5, TU 4, TU 3, TU 2, TU 1	Maximum	RF stages. Test Set must be tuned before making these adjustments. Adjust pipes in order listed. Replace caps when finished.	4A,B,C,D.
Step 10	6	Coil TU 6B	2-5 ua. less than max.	1st oscillator. Adjust for 2-5 ua. less than max. in CCW direction (adjusted from wiring side of chassis).	3
Step 11	4	Coil TU 6B	0	1st oscillator coil.	4E
Step 12	4	Coil TU 6C	0	1st oscillator coil. (Frequency #2 of 2-frequency receiver.	
Step 13	2	Coils 306B, 305B, 304B, 303B, 302B, 301B	Maximum	1st IF coils. Test Set must be tuned before making these adjustments. Care must be taken to tune 306 to larger peak.	2A,B,C, D,E,F,
Step 1	4	Coil 978	0	Discriminator secondary. Probe near tube V 304 Steps 1-9.	1A
Step 2	5	Coil 312	Maximum	Discriminator primary.	1B
Step 3	4	Coil 978	0	Repeat Step 1.	1C
Step 4	5	Coil 312	Maximum	Repeat Step 2.	1C
Step 5	3	Coil 311	Maximum	Limiter Coil.	1D
Step 6	2	Coil 310	Maximum	2nd IF-4.	1D
Step 7	1	Coil 309	Maximum	2nd IF-3.	1D
Step 8	1	Coil 308	Maximum	2nd IF-2, reduce output of Test Set.	1D
Step 9	1	Coil 307	Maximum	2nd IF-1.	1D

ALIGNMENT CHART FOR LOW BAND SENSICON RECEIVERS

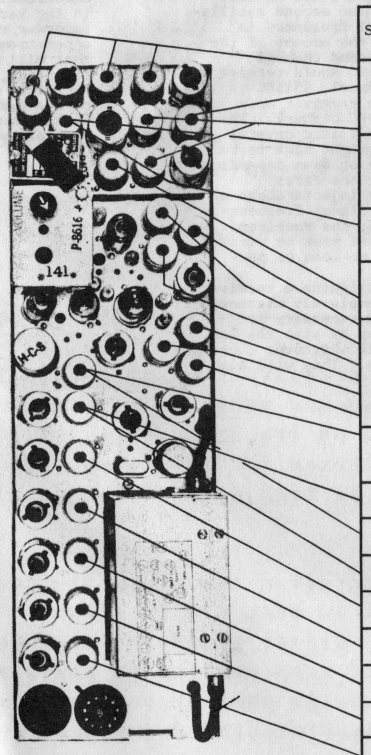

Sequence	Meter Position	Adjustment	Meter Reading	Stage and Procedure	text reference
Step 14	2	Coils TX1, TX2 TX3, TX4, TX5, TX7	Maximum	RF stages. Test set must be tuned before making these adjustments. Adjust coils in order listed.	4A,B,C,D.
Step 10	6	Coil TM6, TL6, or TH6	2-5 ma. less than maximum	1st oscillator. Adjust for 2-5 ua. less than max. in C.C.W. direction (adjusted from top of chassis)	3
Step 11	4	Coil TH6, TM6, or TL6	0	1st oscillator coil	4E
Step 12	4	Coil TH8, TM8, or TL8	0	1st oscillator coil. (Frequency #2 of 2 frequency receiver)	
Step 13	2	Coils 401, 402, 403, 404, 405, 406	Maximum	1st IF coils. Test set must be tuned before making these adjustments. (Receivers using tuneable filter only - adjust slugs F-1 and F-2 of K-9103 filter for maximum meter reading)	2A,B,C, D,E,F.
Step 1	4	Coil 978	0	Discriminator secondary. Probe near tube V-304 steps 1-9	1A
Step 2	5	Coil 312	Maximum	Discriminator primary	1B
Step 3	4	Coil 978	0	Repeat step 1	1C
Step 4	5	Coil 312	Maximum	Repeat step 2	1C
Step 5	3	Coil 311	Maximum	Limiter coil	1D
Step 6	2	Coil 310	Maximum	2nd IF-4	1D
Step 7	1	Coil 309	Maximum	2nd IF-3	1D
Step 8	1	Coil 308	Maximum	2nd IF-2	1D
Step 9	1	Coil 307	Maximum	2nd IF-1	1D

ALIGNMENT CHART FOR RECEIVERS WITHOUT PERMAKAY FILTERS

SEE PAGE 11, SECTION II AND III

STEP	INPUT SIGNAL FREQUENCY	SIGNAL INPUT FEED POINT	METER POSITION	METER READING	ADJUST	NOTES
1	LO IF FREQ.	1st limiter grid	4	0	Disc. Sec.	Be sure meter swings through zero(±) as secondary is tuned. (see note 1)
2	LO IF FREQ.	1st limiter grid	5	MAX.	Disc. Pri.	
3	LO IF FREQ.	1st limiter grid	3	MAX.	2nd Lim.	Note 2
4	LO IF FREQ.	2nd mixer grid	2 or 1	MAX.	1st Lim.	Note 2
5	LO IF FREQ.	2nd mixer grid	2 or 1	MAX.	2nd IF	Adjust all coils in low or 2nd IF. (Note 3)
6	HI IF FREQ.	1st mixer grid	2 or 1	MAX.	HI IF	Adjust all coils in HI IF stages. (Note 4)
7	SIGNAL FREQ.	1st mixer grid	2 or 1	MAX.	OSC. MULT.	On 150MC Receivers there may be 2 stages. On these, first OSC MULT is peaked on position #6. (Note 5)
8	SIGNAL FREQ.	2nd RF Grid	2 or 1	MAX.	Mixer Input	Note 2
9	SIGNAL FREQ .	Antenna	2 or 1	MAX.	Ant. RF, Mixer	Note 2
Alignment to this point is approximate.			Operation of receiver should be normal, but it will not be exactly on freq.			
10	ON FREQ. SIGNAL	Antenna	4	0	Disc. Sec.	Note 1 & 6
11	SIGNAL GEN.	Antenna	4	0	Sig. Gen. Freq.	Note 7
12	SIGNAL GEN. (from step 11)	Antenna	REPEAT STEPS # 2 through # 9, OBSERVING NOTES 2 and 3			

ALIGNMENT CHART FOR UNICHANNEL RECEIVERS

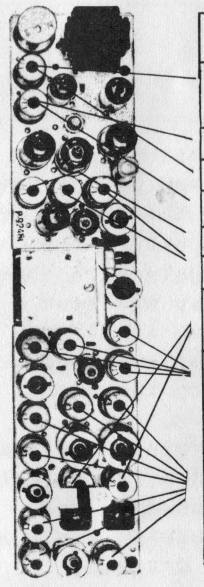

SEQUENCE	METER SWITCH POSITION	ADJUSTMENTS	METER READING	STAGE AND PROCEDURE	text reference
Step 1	4	L 17	0	Discriminator secondary: probe near pin 1 of V 107 steps 1 through 6.	1, 1A
Step 2	5	L 16	Maximum	Discriminator Primary.	1B
Step 3	4	L 17	0	Repeat Step 1.	1C
Step 4	5	L 16	Maximum	Repeat Step 2.	1C
Step 5	2	L 15	Maximum	Limiter	1D
Step 6	1	L 13 and L 14	Maximum	2nd IF	1D
Step 7	6	L 6 or L 6A	Maximum	1st Oscillator: on 2-frequency models, place F 1 - F 2 switch in associated position.	3
Step 8	2	L 9, L 10, L 11 & L 12	Maximum	1st IF: Test set must be tuned and connected to ANT. input connector before making these adjustments. (Reduce generator for a reading of less than 22 ua.)	2A,B,C, D,E,F,
Step 9	2	L 1, L 2, L 3, L 4, L 5, L 7, or L 7A & L 8	Maximum	RF and Oscillator Multiplier: Test Set must be tuned and connected to ANT. input connector before making these adjustments. (Reduce generator output for a reading of less than 22 ua.)	4A,B,C, D,E,

REFERENCE NOTES FOR ALIGNMENT OF UNICHANNEL AND SENSICON RECEIVERS

1. A signal source of 455KC plus or minus 1KC is fed into the grid of the first 455KC IF stage (or at the input of the Permakay Filter). The level of this signal should be adjustable. This level adjustment can be made by varying the coupling between the set and the 455KC Source.
   A. Select R plus or minus 4 on the test set, and adjust the discriminator secondary for zero.
   B. Select R5 on the test and adjust the discriminator primary for maximum.
   C. Repeat steps A & B.
   D. Adjust signal level low enough so some noise is heard popping through the receiver and peak the 455KC limiter and IF coils or R1 or R2. (Choice depends on particular model).
2. After the 455KC discriminator is set on frequency, the zero reading can be used to set the signal generator on the proper frequency for aligning the high IF as follows:
   A. Set the signal generator for the approximate IF frequency. This frequency can be found on the schematic diagram.
   B. Couple the signal generator loosely to the grid of the first mixer. Couple enough signal to obtain an increase on R1 or R2 reading.
   C. Set the test set on R4.
   D. Locate the exact IF frequency by rotating the generator dial back and forth for a meter reading of exactly zero as the dial is rotated. Leave the generator dial set for zero meter reading and check this reading throughout the receiver alignment as the generator may drift.
   E. Attenuate the signal source until the first limiter (R2) is not saturated. The meter reading should follow the signal up and down as the generator attenuator is varied.
   F. Peak the High IF coils for maximum reading on R2.
3. The first crystal oscillator is adjusted next. Peak the oscillator for maximum amplitude on R6.
   A. Tune oscillator so that reading on R6 drops off about 10% on the sloping side of the crystal activity response.
4. Adjustment of the RF stages follows:
   A. Adjust signal source (30-50MC or 145-170MC) to approximate frequency of the receiver and couple this signal to the first mixer grid. The signal amplitude should be about 100uv.
   B. Adjust the signal generator frequency until a response is noted on R1, switch meter to R plus or minus 4 and slowly rotate the generator dial until the reading is zero. The discriminator must swing plus and minus as the dial is rocked back and forth.
   C. Connect the signal to the receiver antenna and adjust the signal generator attenuator until R1 is unsaturated.
   D. Peak up antenna RF and mixer curcuits, attenuating the signal as the receiver comes in tune.
   E. Using an accurate frequency meter or test carrier, adjust the receiver first oscillator coil until R4 reads zero. Never adjust the discriminator secondary to put the receiver on frequency.

ALIGNMENT NOTES FOR RECEIVERS WITHOUT PERMAKAY FILTERS

This alignment information applies to Motorola receivers that do not have a Permakay IF filter in the second or low IF stage. These receivers are double conversion superhets with tuneable low IF stages. They may have a single crystal furnishing first and second mixer injection or two separate crystals for injection to the two mixers.

If the receiver has a single crystal for the first and second mixer injection, the high IF has to be tuned to the appropriate frequency between the limits shown on the applicable diagram.
If the receiver has two crystals, the high and low IF frequencies are fixed and independent of the input frequency, (Except as noted furthur to precisely tune the receiver on frequency.) to which receiver is tuned.

Since the crystal oscillators cannot be warped (or tuned) to bring the receiver exactly on frequency, these receivers are tuned on frequency by offsetting the IF frequencies from the nominal valves given on the schematic. The sense of offset (+ or -) and amount should be such that the high and low IF passbands are centered on the frequencies produced by the hetrodyning of an ON FREQUENCY signal and the crystal injection frequencies. This offset is done in the final alignment procedure, Step 10.

The alignment instructions are general. They can be made to apply to your specific receiver by reference to the appropriate schematic and identifying the coils, IF frequencies, and tube stages and correllating them to the steps. During alignment of any receiver, caution should be exercised to avoid saturation of the stage that is being peaked. The signal generator should be attenuated at all times so that some noise is heard coming through the set. To be sure the limiter is not saturated, observe that the metered reading on the test set follows the signal generator output up and down as the attenuator is varied up and down. The test signal should be attenuated as the receiver is peaked.

REFERENCE NOTES FOR ALIGNMENT OF RECEIVERS WITHOUT PERMAKAY FILTERS

1. To be sure discriminator is tuned properly, the secondary adjustment should be run back and forth while observing that the meter reading passes through zero and can be swung to a plus or minus reading.

2. Attenuate signal generator until test set reading is not saturated. Some noise should be heard in the receiver output.

3. The first limiter meter position #2 may be saturated with receiver noise. In this case, use meter position #1. Adjust signal generator for Low reading (5-10ua).and peak indicated adjustments.

4. On sets having two oscillator crystals, the high IF is noted on the schematic. On sets having a single oscillator crystal feeding both mixers, the high IF is generally equal to the crystal frequency plus or minus the LO IF frequency. To determine whether to add or subtract the low IF from the crystal frequency, observe on the schematic that the crystal OSC circuit indicates a range of crystal frequencies. Also note that the high IF shows a range of frequencies.
   You will note by inspection that depending upon the model receiver, frequency of the HI IF may be higher or lower than the frequency of the crystal. If the HI IF is higher, obtain the high IF frequency by adding the crystal frequency to the LO IF frequency. If the HI IF frequency is lower than the crystal frequency, obtain the HI IF frequency by subtracting the LO IF frequency from the crystal frequency.

5. To initially set signal generator on frequency, meter discriminator on position #4, feed 100-10K microvolt signal into receiver. Rock generator frequency back and forth for zero reading on discriminator.
   After complete alignment, the receiver discriminator should idle on zero plus or minus 2ua. with no signal input to antenna. (i.e. receiver noise passing through IF bond pass should cause discriminator to read zero plus or minus 2 microamps. If reading is higher it indicates the IF is not properly aligned. The alignment procedure should be repeated.

6. Final alignment will establish receiver exactly on frequency. It is therefore necessary to have a signal from a frequency meter or transmitter, known to be on frequency, applied to the receiver antenna for this step. Discriminator is readjusted for zero on this step.

7. This operation transfers frequency established in step #10 to signal generator. Signal generator frequency is adjusted for zero reading on position #4. It is now on same frequency as source used for discriminator adjustment in step #10.

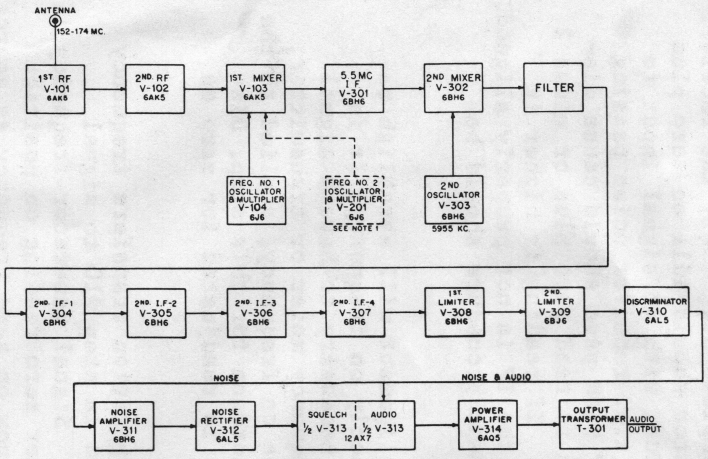

152-174 MC SENSICON RECEIVER

NOTES:
1 V-201 IS USED FOR TWO FREQUENCY OPERATION. ONLY ONE FREQUENCY MAY BE IN USE AT ONE TIME.
$F_{XTAL} = \frac{F_{CARRIER} - 5.5\ MC}{5}$
2ND. INT. FREQ.=455 KC.

MODEL DESCRIPTION - SENSICON RECEIVER

MODEL	CHANNELS	OPERATING VOLTAGE	FILTER TYPE
PA-8433-A	1 FREQ.	6 V.DC. OR 117 V.A.C.	K-8436-A
PA-8476-A	2 FREQ.	6 V. DC. OR 117 V.A.C.	K-8436-A
PA-8476-A-12 V.	2 FREQ.	12 V. D.C.	K-8436-A
PA-8438-A	1 FREQ.	12 V. D.C.	K-8436-A
PA-9138	1 FREQ.	6 V.D.C. OR 117 V.A.C.	K-9103
PA-9138-R2	2 FREQ.	6 V.D.C. OR 117 V.A.C.	K-9103
PA-9138-R2-12 V.	2 FREQ.	12 V. D.C.	K-9103
PA-9138-12 V.	1 FREQ.	12 V. D.C.	K-9103
PA-7265-A	1 FREQ.	6 OR 12 VDC, 117 V.A.C.	K-8436-A
PA-7251-A	2 FREQ.	" " "	K-8436-A

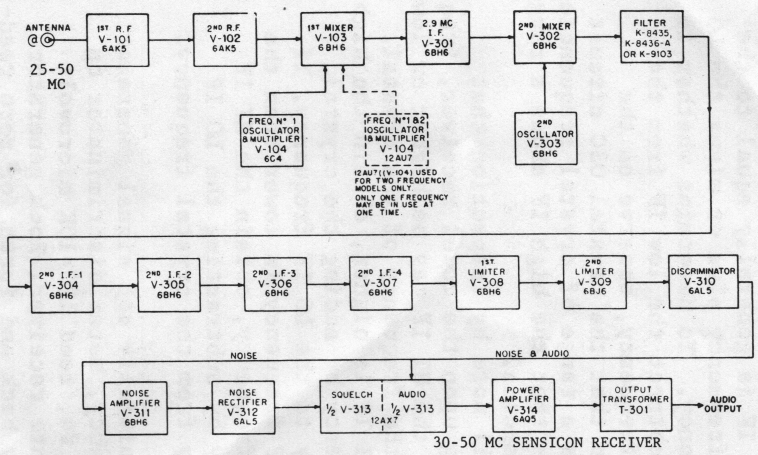

30-50 MC SENSICON RECEIVER

f_c = CARRIER FREQUENCY = $3f_0 - f_1$ = 25 TO 50 MC.
f_0 = OSCILLATOR CRYSTAL FREQUENCY = $\frac{f_c + f_1}{3}$ = 9300 TO 17,630 KC.
f_1 = 1ST. I.F. FREQUENCY = 2.9 MC.

MODEL DESCRIPTION — SENSICON RECEIVER

MODEL	CHANNELS	PRIMARY VOLTAGE	FILTER TYPE
PA-8633-A	1 FREQ.	6 V. D.C. OR 117 V. A.C.	K-8436-A
PA-8663-A	1 FREQ.	6 V. D.C. OR 117 V. A.C.	K-8435
PA-8658-A	2 FREQ.	6 V. D.C. OR 117 V. A.C.	K-8436-A
PA-8658-A-12 V.	2 FREQ.	12 V. D.C.	K-8436-A
PA-8619-A	1 FREQ.	12 V. D.C.	K-8436-A
PA-8658-A-24V.	2 FREQ.	24 V. D.C.	K-8436-A
PA-9161	2 FREQ.	6 V. D.C. OR 117 V.A.C.	K-9103
PA-9265	1 FREQ.	6 V DC OR 117 V A.	K-8436-A
PA-9266	1 FREQ.	6 V DC OR 117 V AC	K-9103

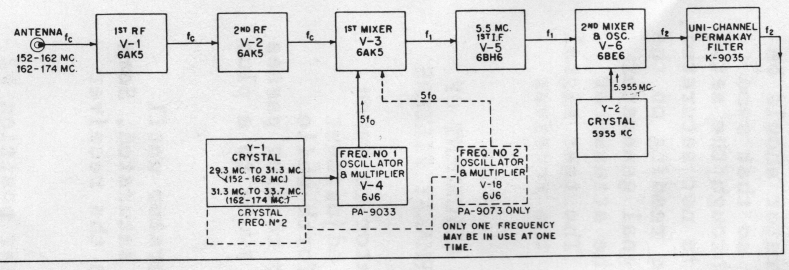

DIAGRAM NO 63C800211

PA-9033 AND PA-9073 UNICHANNEL SENSICON

f_c = CARRIER FREQUENCY = $5f_0 + f_1$, 152 MC. TO 162 MC., 162 MC. TO 174 MC.

f_0 = OSCILLATOR CRYSTAL FREQUENCY = $\frac{f_c + f_1}{5}$ = 29.3 MC. TO 31.3 MC., 31.3 MC. TO 33.7 MC. (152 TO 162 MC.) (162 TO 174 MC.)

f_1 = 1ST INT. FREQ.= 5.5 MC.

f_2 = 2ND INT. FREQ.=.455 MC.

$f_1 + f_2$ = 2ND CRYSTAL = 5.955 MC.

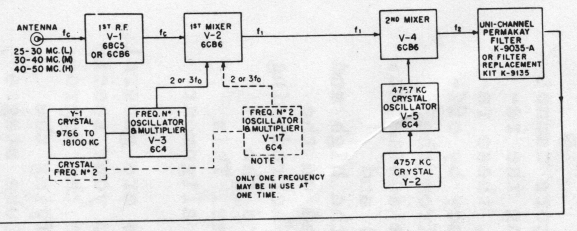

DIAGRAM NO 63C802494

25-50 MC. UNICHANNEL SENSICON

f_c = CARRIER FREQUENCY = $2f_0 + f_1$ = 30 TO 40 MC.
f_c = CARRIER FREQUENCY = $3f_0 - f_1$ = 25 TO 30 MC AND 40 TO 50 MC
f_0 = OSCILLATOR CRYSTAL FREQUENCY = $\frac{f_c + f_1}{3}$ = 9766 TO 18,100 KC. 25-30 AND 40-50 MC
f_0 = OSCILLATOR CRYSTAL FREQUENCY = $\frac{f_c - f_1}{2}$ FOR 30 TO 40 MC ONLY
f_1 = 1ST INT. FREQUENCY = 4.3 MC.
f_2 = 2ND INT. FREQUENCY = 457 KC.
f_2 = 4757 - f_1

NOTE:
1. FREQ. N° 2 OSCILLATOR & MULTIPLIER IN TWO FREQUENCY MODELS ONLY.
2. THE 6BG7 TUBE REPLACES THE CK5829 IN MODELS PA-9034B, PA-9034-C-12V, PA-9074C, PA-9074C-12V AND PA-9157 B.

MODEL DESCRIPTION
UNI-CHANNEL SENSICON RECEIVER

MODEL	CHANNELS	OPERATING VOLTAGE	FILTER TYPE
PA-9034B, PA-9034C	1 FREQ	6 V DC OR 117 V. AC	K-9035-A
PA-9034B-12V, PA-9034C-12 V	1 FREQ	12 V DC	K-9035-A
PA-9074B, PA-9074C	2 FREQ	6 V DC OR 117 V. AC	K-9035-A
PA-9074B-12V, PA-9074C-12 V	2 FREQ	12 V DC	K-9035-A
PA-9157A, PA-9157B	1 FREQ	6 V CC OR 117 V. AC	K-9135

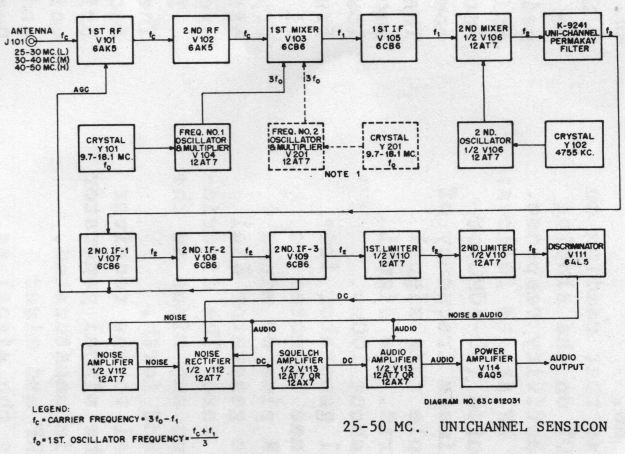

DIAGRAM NO. 63C812031

25-50 MC. UNICHANNEL SENSICON

LEGEND:
f_c = CARRIER FREQUENCY = $3f_0 - f_1$
f_0 = 1ST. OSCILLATOR FREQUENCY = $\frac{f_c + f_1}{3}$
f_1 = 1ST. INTERMEDIATE FREQUENCY = 4.3 MC.
f_2 = 2ND. INTERMEDIATE FREQUENCY = 455 KC.

NOTES:
1. FREQUENCY NO.2 OSCILLATOR & MULTIPLIER USED IN TWO FREQUENCY MODELS ONLY.

MODEL DESCRIPTION
UNI-CHANNEL SENSICON RECEIVER

MODEL	CHANNELS	PRIMARY POWER SOURCE	FILTER TYPE
PA-9244	1 FREQ.	6.3 V DC OR 117 V AC	K-9241
PA-9244-R2	2 FREQ.	6.3 V DC OR 117 V AC	K-9241
PA-9244-12V	1 FREQ.	12.6 V DC	K-9241

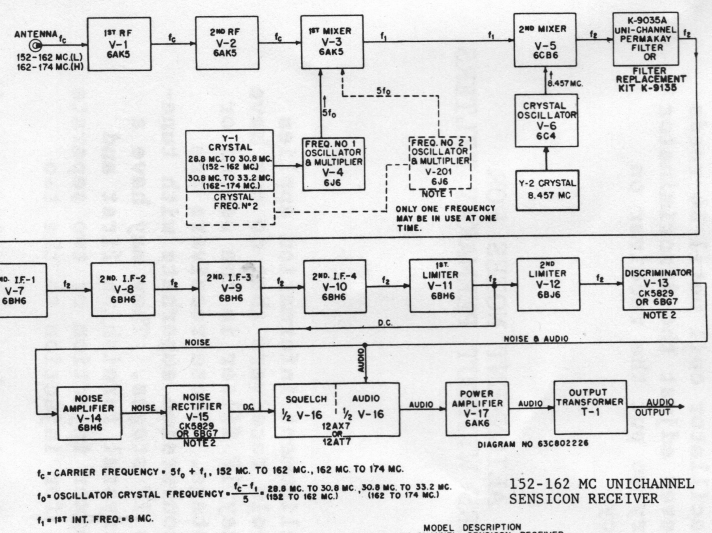

DIAGRAM NO 63C802226

152-162 MC UNICHANNEL SENSICON RECEIVER

f_c = CARRIER FREQUENCY = $5f_0 + f_1$, 152 MC. TO 162 MC., 162 MC. TO 174 MC.

f_0 = OSCILLATOR CRYSTAL FREQUENCY = $\frac{f_c - f_1}{5}$ = 28.8 MC. TO 30.8 MC., 30.8 MC. TO 33.2 MC. (152 TO 162 MC.) (162 TO 174 MC.)

f_1 = 1ST INT. FREQ.= 8 MC.

f_2 = 2ND INT. FREQ.=.457 MC.

$f_1 + f_2$ = 2ND CRYSTAL = 8.457 MC.

NOTES:
1. FREQ. NO.2 OSC. & MULT. USED ON TWO FREQ. MODELS ONLY.
2. THE 6BG7 TUBE REPLACES THE CK5829 IN MODELS PA-9033B, PA-9033B-12, PA-9073B, PA-9073B-12 V. AND PA-9158A.

MODEL DESCRIPTION
UNI-CHANNEL SENSICON RECEIVER

MODEL		CHANNELS	OPERATING VOLTAGE	FILTER TYPE
PA-9033A	PA-9033B	1-FREQ.	6 V. DC. OR 117 V. AC.	K-9035A
PA-9033A-12 V	PA-9033B-12 V	1-FREQ.	12 V. DC.	K-9035A
PA-9073A	PA-9073B	2-FREQ.	6 V. DC. OR 117 V.A.C.	K-9035A
PA-9073A-12 V	PA-9073B-12 V	2-FREQ.	12 V. DC.	K-9035A
PA-9158	PA-9158A	1-FREQ.	6 V. D.C. OR 117 V. A.C.	K-9135

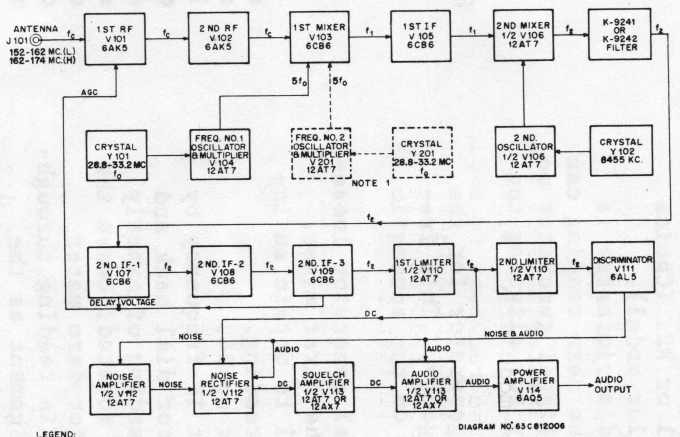

DIAGRAM NO. 63C812006

152-162 MC UNI-CHANNEL SENSICON

LEGEND:
f_c = CARRIER FREQUENCY = $5f_0 + f_1$
f_0 = 1ST. OSCILLATOR FREQUENCY = $\frac{f_c - f_1}{5}$
f_1 = 1ST. INTERMEDIATE FREQUENCY = 8 MC.
f_2 = 2ND. INTERMEDIATE FREQUENCY = 455 KC.

NOTES:
1. FREQUENCY NO.2 OSCILLATOR & MULTIPLIER USED IN TWO FREQUENCY MODELS ONLY.
2. THE RECEIVER MODELS LISTED ABOVE ARE ALSO AVAILABLE WITH THE K-9242 TRI-K FILTER IN PLACE OF THE K-9241 PERMAKAY FILTER. NOMENCLATURE FOR THE RCVRS. CONTAINING THE TRI-K FILTERS IS CHANGED BY THE ADDITION OF -X AFTER THE RCVR. MODEL NUMBER.

MODEL DESCRIPTION
UNI-CHANNEL SENSICON RECEIVER

MODEL	CHANNELS	PRIMARY POWER SOURCE	FILTER TYPE
PA-9243	1 FREQ.	6.3 V DC OR 117 V AC	K-9241
PA-9243-R2	2 FREQ.	6.3 V DC OR 117 V AC	K-9241
PA-9243-12 V	1 FREQ.	12.6 V DC	K-9241
SEE NOTE 2			

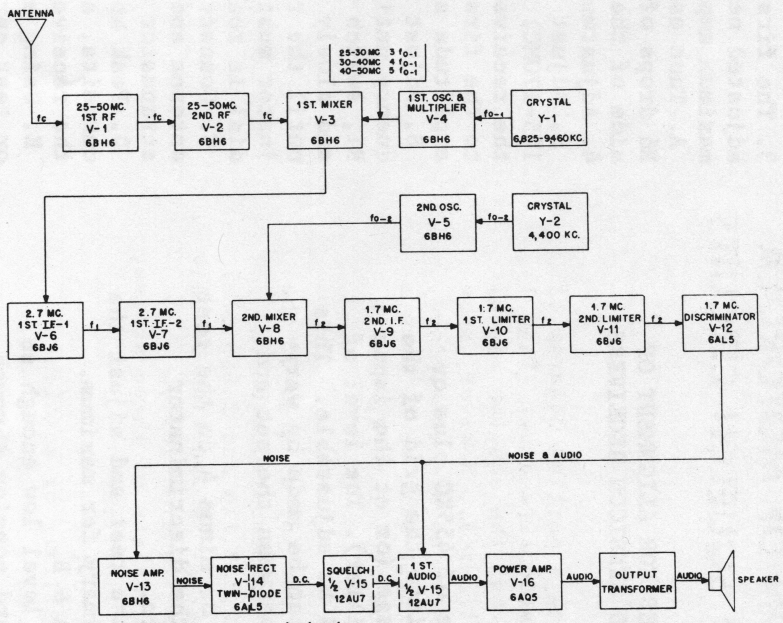

f_{0-1} = 1ST. OSCILLATOR FREQUENCY.
f_{0-2} = 2ND. OSCILLATOR FREQUENCY. — 4400 KC
fc = CARRIER FREQUENCY.
f_1 = 1ST. I.F. FREQUENCY. — 2.7
f_2 = 2ND. I.F. FREQUENCY. — 1.7
$f_1 = f_c - 3f_{0-1}$ (25-30 MC.)
$f_1 = f_c - 4f_{0-1}$ (30-40MC.)
$f_1 = f_c - 5f_{0-1}$ (40-50MC.)

$f_2 = f_{0-2} - f_1$
$f_{0-1} = \frac{f_c - f_1}{3}$ (25-30MC.)
$f_{0-1} = \frac{f_c - f_1}{4}$ (30-40MC.)
$f_{0-1} = \frac{f_c - f_1}{5}$ (40-50MC.)

MOTOROLA P-8628 DISPATCHER RECEIVER

OPERATION OF MOTOROLA PATENTED SQUELCH CIRCUITS

When examining a partial diagram of an FM communications receiver (Fig. 1), it may appear that the squelch circuit is overly complicated. However, once the circuit functions are understood, the squelch circuit will be no more a mystery than the oscillators, mixers and IF stages.

A simplified partial diagram of the Motorola noise-compensated squelch (U.S. patents 2,343,115 and 2,459,675) is shown in Fig. 2. Inspection of this diagram reveals its simplicity. Basically, it consists of three stages;

1. The noise amplifier
2. The noise rectifier
3. The DC amplifier or squelch-control tube.

A detailed explanation of the function of the squelch circuit requires a review of some fundamental theory underlying FM receiver operation.

An inherent characteristic of frequency and phase-modulation systems is the ability of the receiver to reduce noise in the presence of a received signa signal. This noise reduction is a function of the limiter stages.

In Fig. 3, the limiter can be likened to an electronic gate or slot, through which only a given amount of amplitude energy will pass. This action eliminates peak-amplitude and noise pulses. Accordingly, the limiter will only pass a constant amplitude voltage on to the discriminator stage.

In the absence of a carrier signal, the limiter stage passes a continuous level of noise voltage to the discriminator (Fig. 4), and this noise is in turn reproduced at the speaker as a bothersome "nuisance" noise.

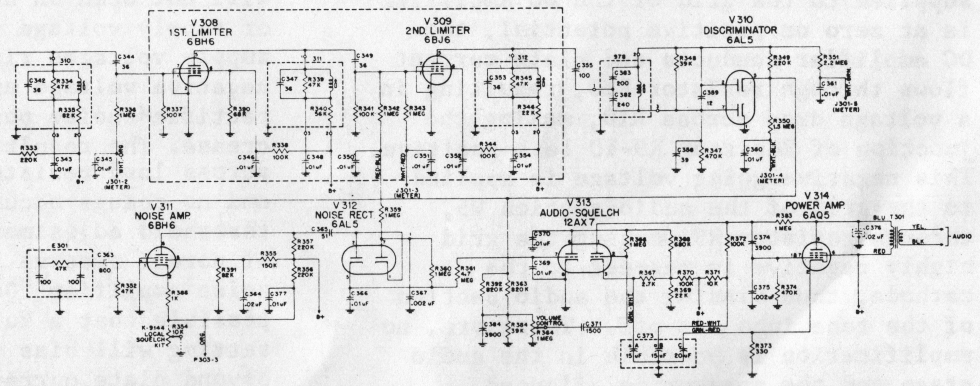

FIG. 1. RECEIVER PARTIAL SCHEMATIC DIAGRAM

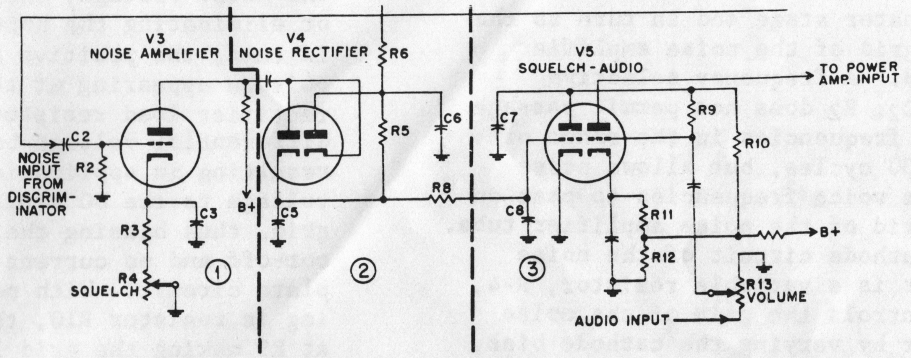

FIG. 2. SIMPLIFIED SQUELCH CIRCUIT PARTIAL SCHEMATIC DIAGRAM

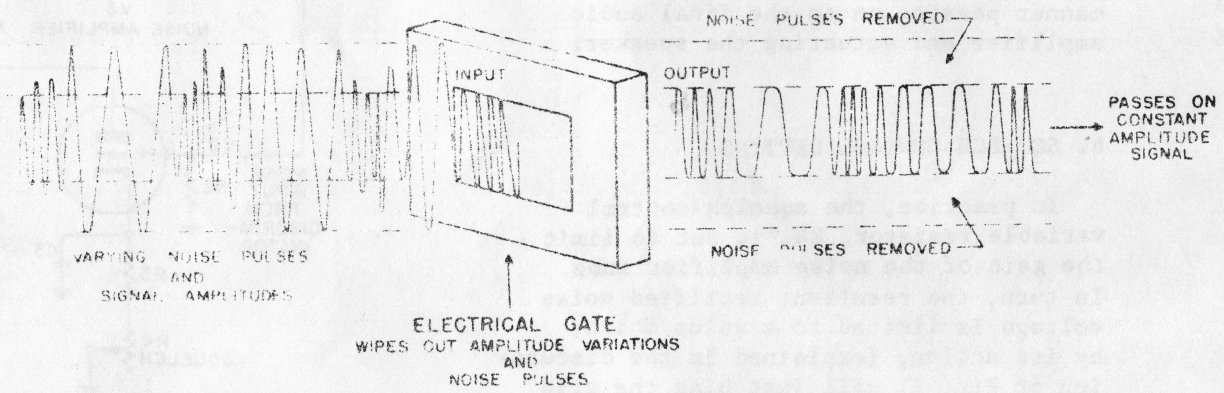

FIG. 3. LIMITER ACTION ON NOISE AND SIGNAL

the discriminator (Fig.4) and in turn this noise is reproduced at the speaker as a bothersome or nuisance noise.

4. SQUELCH ACTION WITH NO SIGNAL

The purpose of the squelch circuit is to shutoff or squelch the bothersome noise at the speaker during periods of no signal receiption. This is accomplished automatically by the action of that portion of the receiver circuit which utilizes rectified noise voltage to bias the first audio stage to cut-off, thereby silencing the speaker.

Now let us follow the action of the squelch circuit. (Fig. 5) shows an expansion of the simplified partial diagram of the squelch circuit. When no signal is being received, noise is passed on from the limiter to the discriminator stage and in turn to the control grid of the noise amplifier stage, V3. A frequency selective network C_2, R_2 does not permit passage of voice frequencies in the range or up to 3000 cycles, but allows noise above the voice frequencies to pass on to the grid of the noise amplifier tube. In the cathode circuit of the noise amplifier is a variable resistor, R-4, which controls the gain of the noise amplifier by varying the cathode bias, thereby becoming a "SQUELCH" control. The output of the noise amplifier drives the noise rectifier V4, (a voltage double stage as shown). The positive rectified noise voltage appears across the rectifier load resistor, R5. A negative DC voltage is taken from the grid of the second limiter, V2, through an isolating circuit consisting of R1, C4, R6 and applied to the plate end of the load resistor, R5. The cathode end of this resistor is positive and the plate or anode end is negative. The sum of the negative limiter voltage and the positive rectified noise voltage appears at load resistor, R5.

The resultant difference voltage (depending on which of the two voltages at R5 predominate) is then applied to the grid of the DC amplifier, V5.

Resistor R8 and capacitors C5, C8, provide the necessary time delay to smooth out rapid fluctuations and irregularities.

Tube V5 is a combination DC amplifier and audio amplifier. If the voltage supplied to the grid of the DC amplifier is at zero or positive potential, the DC amplifier conducts and plate current flows through resistor R10, resulting in a voltage drop across R10, making the junction of Resistor R9-10 less positive. This negative going voltage is applied to the grid of the audio section V5, through resistor R9, making the grid highly negative in respect to the cathode, thus biasing the audio section of the tube into cut-off. Therefore, no amplification is possible in the audio stage and the speaker is silenced.

5. SQUELCH ACTION WITH SIGNAL

When a signal is being received, the amplitude of the signal voltage overrides the noise voltage, thereby reducing or eliminating the noise from the output. In turn, the positive rectified noise voltage appearing at the (V4) noise rectifier load resistor decreases. The differential voltage becomes negative resulting in application of a negative voltage to the DC amplifier control grid, thus biasing the DC amplifier to cut-off and no current will flow in the plate circuit. With no current flowing in resistor R10, the voltage rises at R9 making the grid less negative with respect to the cathode. The audio stage is then biased to normal operating conditions. By this action, the squelch is removed and the signal voltage appearing at the grid of the audio section of V5 is amplified in a normal manner passing on to the final audio amplifier and actuating the speaker.

6. SQUELCH CONTROL SETTING

In practice, the squelch control variable resistor, R4, is set to limit the gain of the noise amplifier tube. In turn, the resultant rectified noise voltage is limited to a value which, by its action, (explained in the discussion of Fig. 5) will just bias the grid of the audio stage to plate current cut-off, which is "Threshold" setting. So even when a weak carrier signal is received which quiets the noise is the receiver by only four to five db; the squelch will open. However, the squelch will not open on normal noise bursts or supply voltage variations. If the supply voltages rise, both the limiter negative voltage applied to R5 and the rectified noise positive voltage increase. The resultant difference voltage across load resistor R5 remains constant and no change occurs in the squelch threshold adjustment. However, because of normal reserve in the range of the noise amplifier "Gain Control" it is possible that a full-on squelch control setting will bias the audio grid to well beyond plate current cut-off. To overcome this excessive bias, a stronger signal at the antenna is required to cause the squelch to open, thereby desensitizing the receiver for weak signal reception.

Full-on squelch control settings should be avoided. Proper threshold setting of the squelch control will not desensitize the receiver and the squelch will function to open on signal levels of very small magnitude (in the order of four to five db quieting), even below the audible level of the modulated signal.

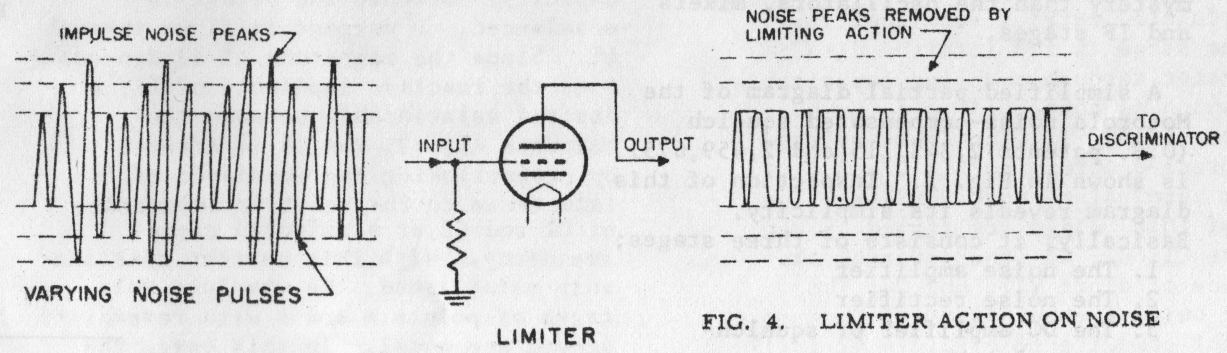

FIG. 4. LIMITER ACTION ON NOISE

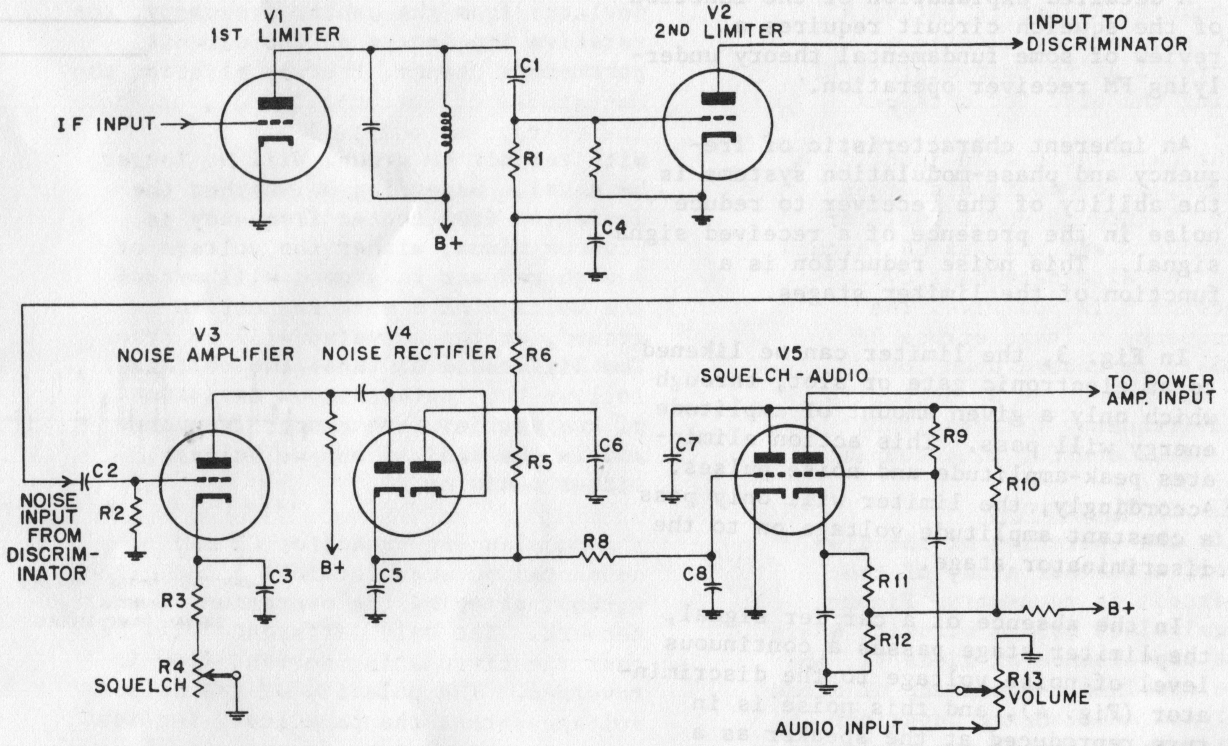

FIG. 5. EXPANDED SIMPLIFIED PARTIAL OF SQUELCH CIRCUIT

DESCRIPTION OF DISCRIMINATOR CIRCUIT

The Motorola Capacitance Discriminator is essentially composed of a resonant circuit, a pair of shunted rectifying diodes and their capacitance to ground, a radio frequency by-pass capacitor, and an unbalancing capacitor. The constants of the entire discriminator **circuit are such that all desired signal components of the** frequency-modulated carrier are detected and impressed upon the audio amplifier circuit.

OPERATION

The modulated carrier from the final limiter stage is fed into the discriminator through coupling capacitor C10, which is connected to point D (Figures 1 and 2). The input voltage is impressed across points D and F of a four terminal network (bridge). The arms of this bridge are formed by capacitors C1, C2, C3 (the internal capacitance of diode V1), and C4. The latter being a combination of the internal capacitance of diode V2 (C11) and the capacitance of C5. Permeability tuned coil L1 is used to achieve circuit resonance. Resistors R1 and R2 form a DC return that creates a phantom ground at the midpoint of L1, eliminating the need for a tapped inductor.

During the half cycle when junction A is positive, V1 conducts a charges capacitor C6 through shunt resistor R2. V2 conducts and charges C6 through R1 during the alternate half cycle when junction B is positive. The audio-frequency voltage across RF bypass C6 is impressed upon load resistor R5 through an RF decoupling and audio-frequency filter circuit composed of R3 and C8, plus coupling capacitor C7.

DETAILED EXPLANATION

To clarify the operation of the discriminator, a further study of the bridge circuit is necessary. Figure 2 **is the equivalent bridge circuit, where C3 is the capacitance of diode V1, and C4 is the combined capacitance of diode V2 (C-11) and unbalancing capacitor C5. Load resistors R1 and R2 are neglected in this analysis. Capacitor C6 effectively shorts the cathode of V1 to** ground at radio frequencies but is essentially an open circuit at audio **frequencies. Since the exciting voltage is impressed solely across terminals D and F, the discriminator output voltage is the sum of voltage A and B** with respect to ground. Since the diodes **are connected in opposition, the resultant voltage is actually $E_A - E_B$. Although C1 equals C2, C3 does not equal C4. To compensate for stray capacity inherent in practical application, C1 actually equals C2 plus stray capacity. Because the bridge is unbalanced, a current i_3 flows through L1. Since the magnitude of i_3 depends upon the reactive impedance of L1, a desired relationship between the currents i_1, i_2, and i_3 is created by proportioning the impedance of the inductance to the relative impedances of C1 and C2 at a selected center frequency. With this current relationship established, the absolute voltages of points A and B with respect to ground are equal. In this case, the discriminator output voltage is zero. However, when the exciting voltage deviates from the center frequency, the relative impedances of the circuit parameters change, thereby altering the** magnitudes of currents i_1, i_2, and i_3. The voltage at points A and B **with respect to ground will no longer be equal. Depending on whether the deviation from center frequency is plus or minus, either the voltage of A with respect to ground will exceed the voltage of B with respect to ground, or the converse will be true. The difference of these two voltages follows the instantaneous deviation of the carrier from center frequency and is the desired output voltage, either audio or DC.**

The unbalancing capacitor C5 may be connected between terminal A and ground without altering the operation of the network. The only difference will be that the circulating current flow is reversed. The polarity of the output voltage across the capacitor, incident to a given departure from center frequency, will also be reversed.

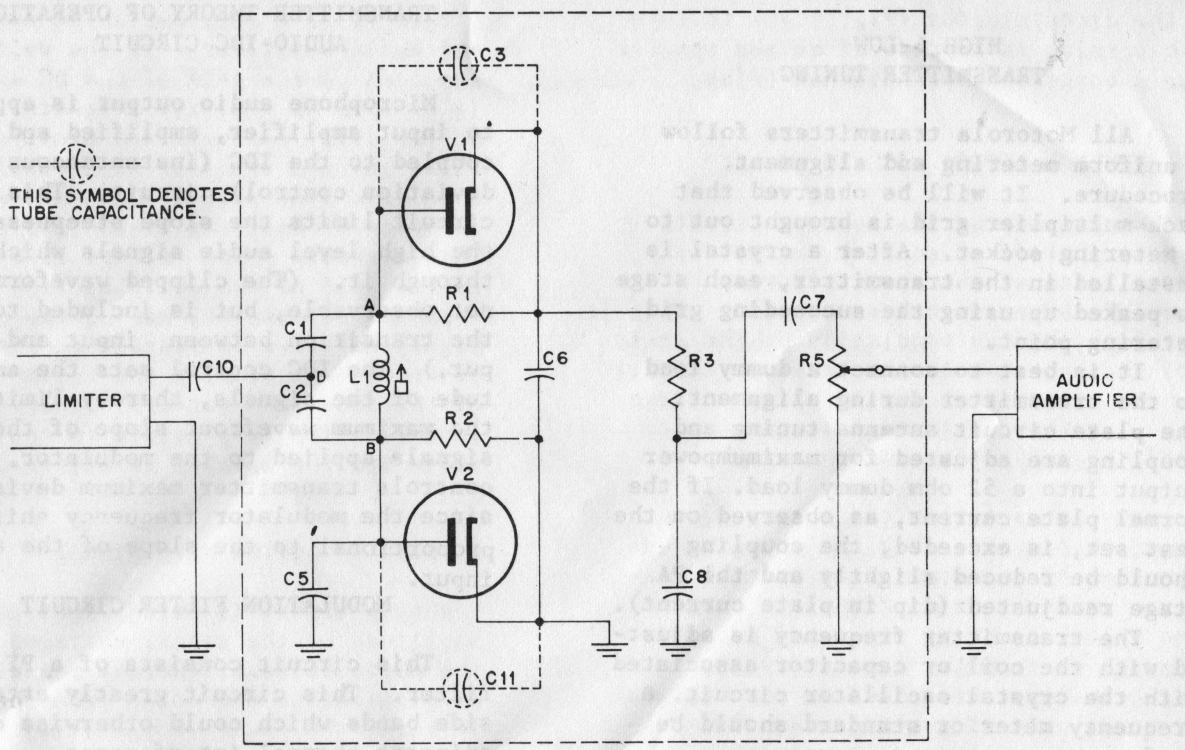

FIGURE 1 BTIC-574

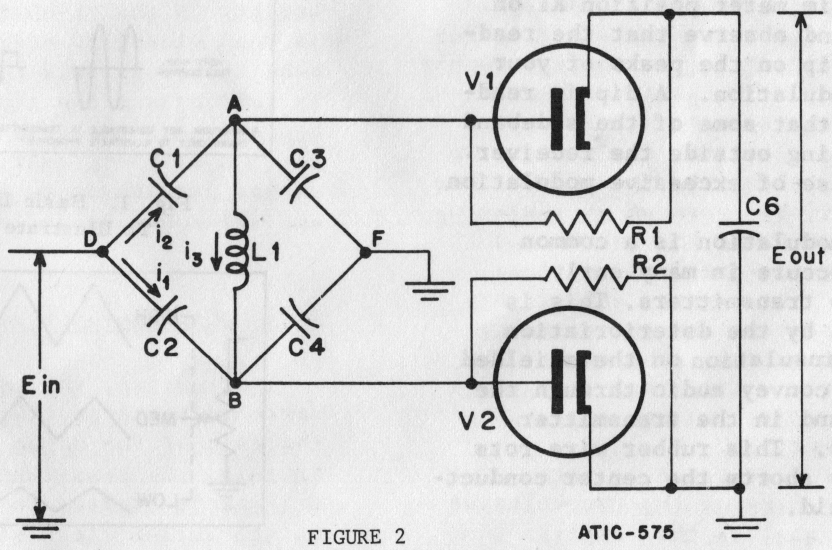

FIGURE 2 ATIC-575

HIGH & LOW TRANSMITTER TUNING

All Motorola transmitters follow a uniform metering and alignment procedure. It will be observed that each multiplier grid is brought out to a metering socket. After a crystal is installed in the transmitter, each stage is peaked up using the succeeding grid metering point.

It is best to connect a dummy load to the transmitter during alignment. The plate circuit antenna tuning and coupling are adjusted for maximumpower output into a 52 ohm dummy load. If the normal plate current, as observed on the test set, is exceeded, the coupling should be reduced slightly and the PA stage readjusted (dip in plate current).

The transmitter frequency is adjusted with the coil or capacitor associated with the crystal oscillator circuit. A frequency meter or standard should be used.

The modulation should be measured and adjusted with some form of monitor. If it exceeds plus or minus 15KC, it will cause choppy reception in a receiver having a Permakay filter, If you do not have a modulation monitor, the modulation may be set as follows:

Have an observer listen to your signal with a receiver having a Permakay filter. Have him meter position R1 on his receiver and observe that the reading does not dip on the peaks of your transmitter modulation. A dip in reading indicates that some of the sideband energy is falling outside the receiver bandpass because of excessive modulation (Deviation).

Loss of modulation is a common problem that occurs in many early Motorola strip transmitters. This is usually caused by the deterioriation of the rubber insulation on the shielded wires used to convey audio through the power supply and in the transmitter audio circuits. This rubber wire rots and internally shorts the center conductor to the shield.

TRANSMITTER THEORY OF OPERATION AUDIO-IDC CIRCUIT

Microphone audio output is applied to input amplifier, amplified and coupled to the IDC (instantaneous deviation control) circuit. This circuit limits the slope steepness of the high level audio signals which pass through it. (The clipped waveform is not observable, but is included to show the transition between input and output.) The IDC control sets the amplitude of the signals, thereby limiting the maximum wavefront slope of the signals applied to the modulator. This controls transmitter maximum deviation, since the modulator frequency shift is proportional to the slope of the audio input.

MODULATION FILTER CIRCUIT

This circuit consists of a PI filter. This circuit greatly attenuates side bands which could otherwise cause adjacent channel interference.

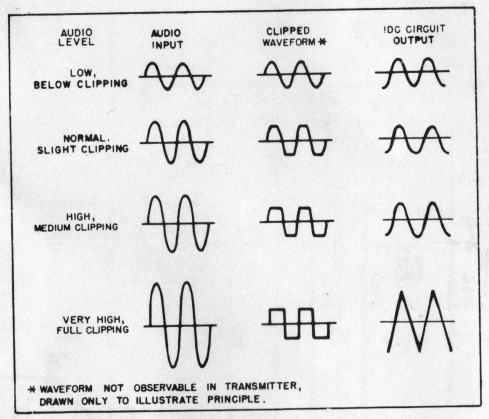

Fig. 1. Basic IDC Waveforms (To illustrate the principle)

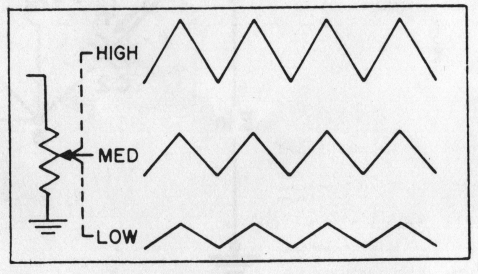

Fig. 2. Effect of IDC Control

EARLY IDC CIRCUITS

SCHEMATIC DIAGRAM

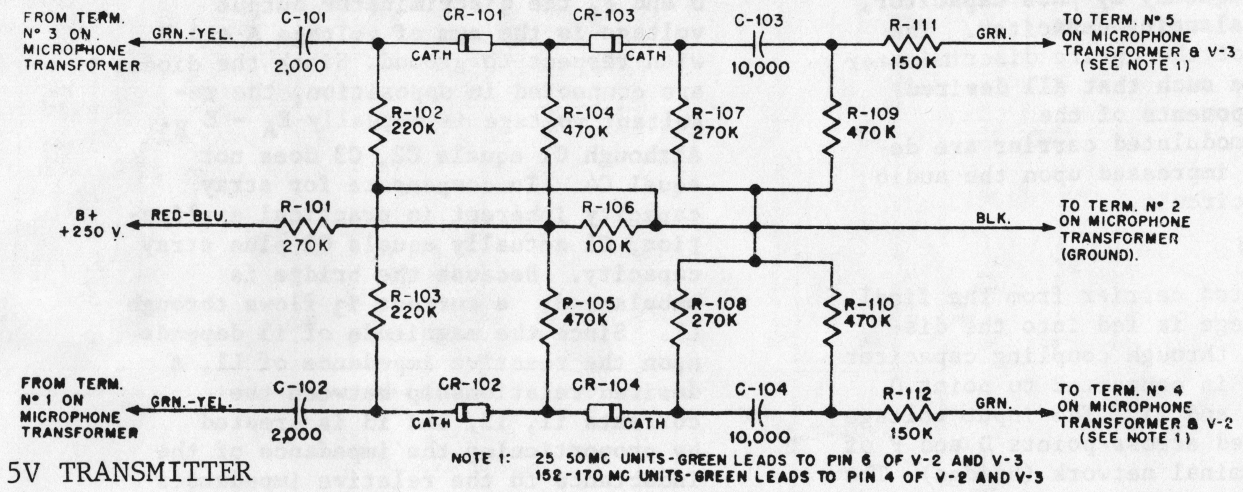

5V TRANSMITTER

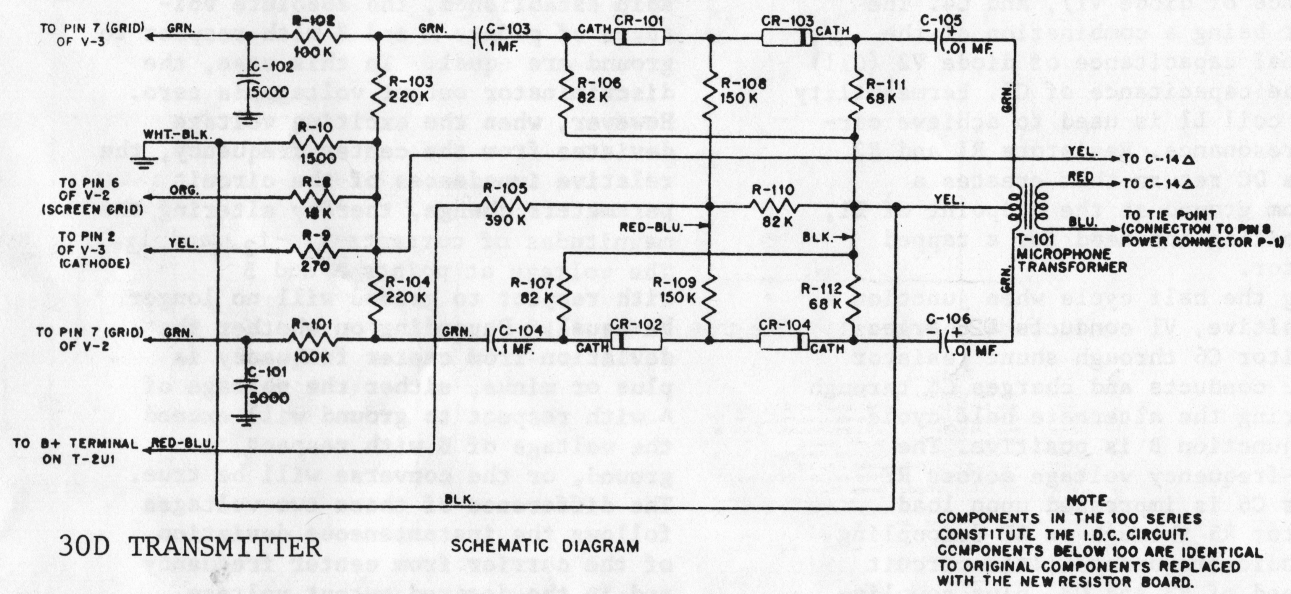

30D TRANSMITTER SCHEMATIC DIAGRAM

EARLY IDC CIRCUITS

These Instantaneous Deviation Control conversion kits were commonly field installed in 5V and 30D transmitters to comply with FCC rule changes limiting carrier deviation to 15kc.

LATE IDC CIRCUITS

All strip transmitters have an integral limiter. Consult the appropriate schematic.

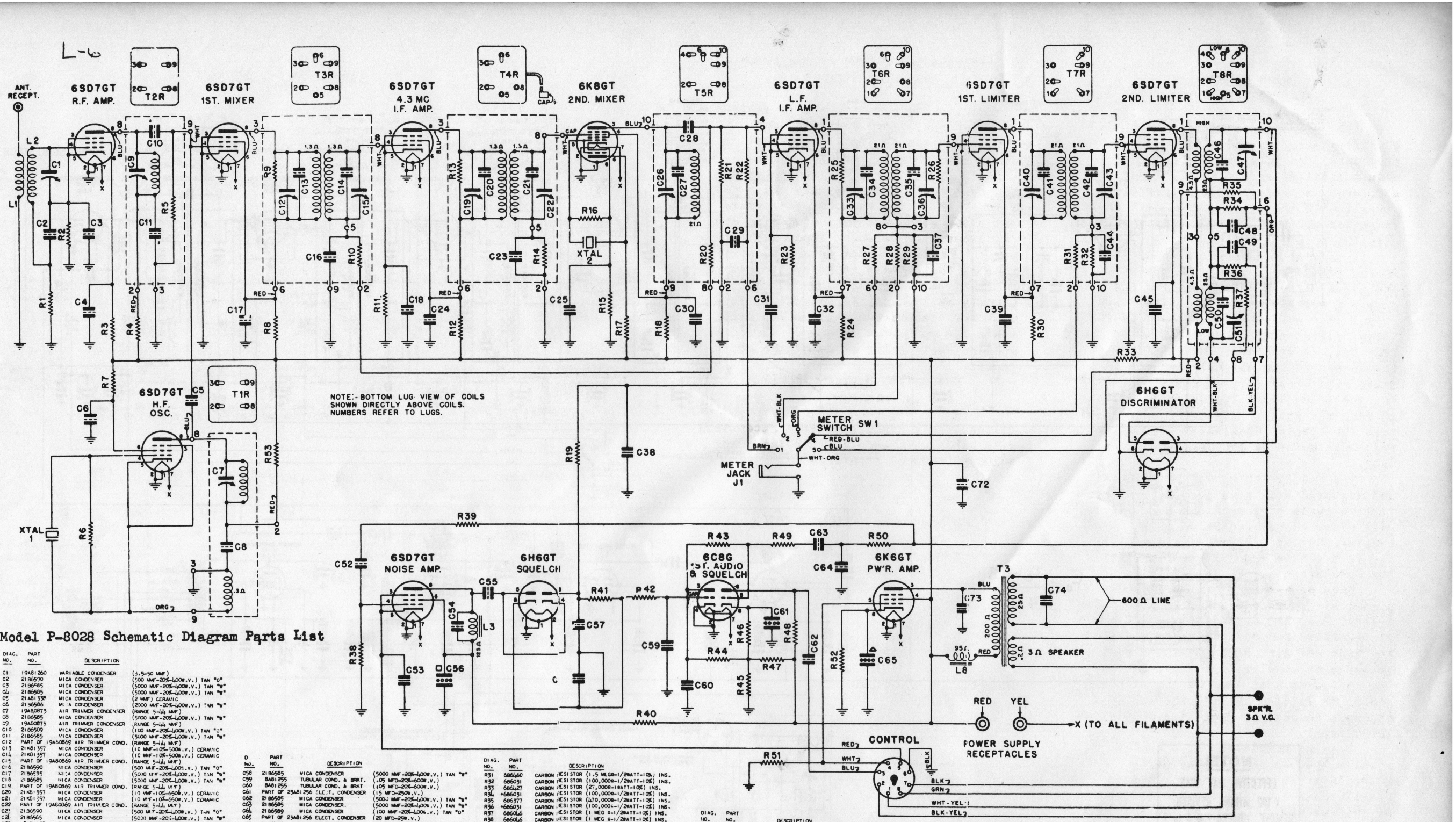

Model P-8028 Schematic Diagram Parts List

DIAG. NO.	PART NO.	DESCRIPTION	
C1	19A81260	VARIABLE CONDENSER	(3.5-50 MMF)
C2	2186590	MICA CONDENSER	(500 MMF-20%-500W.V.) TAN "O"
C3	2186485	MICA CONDENSER	(5000 MMF-20%-500W.V.) TAN "W"
C4	2186585	MICA CONDENSER	(5000 MMF-20%-500W.V.) TAN "W"
C5	21A81338	MICA CONDENSER	(2 MMF) CERAMIC
C6	2136586	MICA CONDENSER	(2000 MMF-20%-500W.V.) TAN "W"
C7	19A80873	AIR TRIMMER CONDENSER	(RANGE 5-44 MMF)
C8	2186585	MICA CONDENSER	(5000 MMF-20%-500W.V.) TAN "W"
C9	19A80873	AIR TRIMMER CONDENSER	(RANGE 5-44 MMF)
C10	2186509	MICA CONDENSER	(100 MMF-20%-500W.V.) TAN "O"
C11	2186585	MICA CONDENSER	(5000 MMF-20%-500W.V.) TAN "W"
C12	PART OF 19A80869	AIR TRIMMER COND.	(RANGE 5-44 MMF)
C13	21A81357	MICA CONDENSER	(10 MMF-10%-500W.V.) CERAMIC
C14	21A81357	MICA CONDENSER	(10 MMF-10%-500W.V.) CERAMIC
C15	PART OF 19A80869	AIR TRIMMER COND.	(RANGE 5-44 MMF)
C16	2186590	MICA CONDENSER	(500 MMF-20%-500W.V.) TAN "O"
C17	2186535	MICA CONDENSER	(5000 MMF-20%-500W.V.) TAN "W"
C18	2186585	MICA CONDENSER	(5000 MMF-20%-500W.V.) TAN "W"
C19	PART OF 19A80869	AIR TRIMMER COND.	(RANGE 5-44 MMF)
C20	21A81357	MICA CONDENSER	(10 MMF-10%-500W.V.) CERAMIC
C21	21A81357	MICA CONDENSER	(10 MMF-10%-500W.V.) CERAMIC
C22	PART OF 19A80869	AIR TRIMMER COND.	(RANGE 5-44 MMF)
C23	2186590	MICA CONDENSER	(500 MMF-20%-500W.V.) TAN "O"
C24	2186565	MICA CONDENSER	(500 MMF-20%-500W.V.) TAN "O"
C25	BA81123	TUBULAR COND. & BRKT.	(.05 MFD-20%-600W.V.)
C26	19A80873	AIR TRIMMER CONDENSER	(RANGE 5-44 MMF)
C27	2186572	SILVER MICA CONDENSER	(50 MMF-5%-200W.V.) RED "O"
C28	2186568	MICA CONDENSER	(50 MMF-20%-500W.V.) TAN "O"
C29	2186590	MICA CONDENSER	(500 MMF-20%-500W.V.) TAN "O"
C30	BA81123	TUBULAR COND. & BRKT.	(.05 MFD-20%-600W.V.)
C31	BA81123	TUBULAR COND. & BRKT.	(.05 MFD-20%-600W.V.)
C32	BA81125	TUBULAR COND. & BRKT.	(.05 MFD-20%-600W.V.)
C33	PART OF 19A80869	AIR TRIMMER COND.	(RANGE 5-44 MMF)
C34	2186572	SILVER MICA CONDENSER	(5% MMF-5%-200W.V.) RED "O"
C35	2186572	SILVER MICA CONDENSER	(50 MMF-5%-200W.V.) RED "O"
C36	PART OF 19A80869	AIR TRIMMER COND.	(RANGE 5-44 MMF)
C37	2186574	MICA CONDENSER	(100 MMF-10%-500W.V.) TAN "O"
C38	BA81123	TUBULAR COND. & STRAP	(.05 MFD-20%-600W.V.)
C39	BA81255	TUBULAR COND. & BRKT.	(.05 MFD-20%-600W.V.)
C40	PART OF 19A80869	AIR TRIMMER COND.	(RANGE 5-44 MMF)
C41	2186572	SILVER MICA CONDENSER	(50 MMF-5%-200W.V.) RED "O"
C42	2186572	SILVER MICA CONDENSER	(50 MMF-5%-200W.V.) RED "O"
C43	PART OF 19A80869	AIR TRIMMER COND.	(RANGE 5-44 MMF)
C44	2186574	MICA CONDENSER	(100 MMF-10%-500W.V.) TAN "O"
C45	BA81255	TUBULAR COND. & BRKT.	(.05 MFD-20%-600W.V.)
C46	PART OF 19A80869	AIR TRIMMER COND.	(RANGE 5-44 MMF)
C47	2186572	SILVER MICA CONDENSER	(50 MMF-5%-200W.V.) RED "O"
C48	2186572	SILVER MICA CONDENSER	(50 MMF-5%-200W.V.) RED "O"
C49	PART OF 19A80869	AIR TRIMMER COND.	(RANGE 5-44 MMF)
C50	2186574	MICA CONDENSER	(100 MMF-10%-500W.V.) TAN "O"
C51	J1255	TUBULAR COND. & BRKT.	(.05 MFD-20%-600W.V.)
C52	BK 73	SILVER MICA CONDENSER	(10 MMF-5%-200W.V.) RED "O"
C53	PART OF 19A80869	AIR TRIMMER COND.	(6 TO 54 MMF)
C54	2186579	MICA CONDENSER	(500 MMF-10%-500W.V.) TAN "O"
C55	2186579	MICA CONDENSER	(500 MMF-10%-500W.V.) TAN "O"
C56	2186573	SILVER MICA CONDENSER	(50 MMF-5%-200W.V.) RED "O"
C57	PART OF 19A80869	AIR TRIMMER COND.	(RANGE 5-44 MMF)
C58	2186526	MICA CONDENSER	(200 MMF-20%-500W.V.) TAN "W"
C59	BA81255	TUBULAR COND. & BRKT.	(.05 MFD-20%-600W.V.)
C60	2186568	MICA CONDENSER	(200 MMF-10%-500W.V.) TAN "W"
C61	2186566	MICA CONDENSER	(500 MMF-20%-500W.V.) TAN "W"
C62	PART OF 23A81256	ELECT. CONDENSER	(15 MFD-250W.V.)
C63	2186585	MICA CONDENSER	(5000 MMF-20%-500W.V.) TAN "W"

D no.	PART NO.	DESCRIPTION	
C58	2186585	MICA CONDENSER	(5000 MMF-20%-500W.V.) TAN "W"
C59	BA81255	TUBULAR COND. & BRKT.	(.05 MFD-20%-600W.V.)
C60	BA81255	TUBULAR COND. & BRKT.	(.05 MFD-20%-600W.V.)
C61	PART OF 23A81256	ELECT. CONDENSER	(15 MFD-250W.V.)
C62	2186585	MICA CONDENSER	(5000 MMF-20%-500W.V.) TAN "W"
C63	2186585	MICA CONDENSER	(5000 MMF-20%-500W.V.) TAN "W"
C64	2186589	MICA CONDENSER	(100 MMF-20%-500W.V.) TAN "O"
C65	PART OF 23A81256	ELECT. CONDENSER	(20 MFD-25W.V.)
C72	2186586	MICA CONDENSER	(2000 MMF-20%-500W.V.) TAN "W"
C73	BA81937	TUBULAR CONDENSER & BRACKET	(.02 MFD-600W.V.)
C74	BA81938	TUBULAR COND. & STRAP	(.05 MFD-20%-600W.V.)
R1	686051	CARBON RESISTOR	(100,000Ω-1/2WATT-10%) INS.
R2	686532	CARBON RESISTOR	(2700Ω-1/2WATT-10%) INS.
R3	686771	CARBON RESISTOR	(68,000Ω-1/2WATT-10%) INS.
R4	686050	CARBON RESISTOR	(4,700Ω-1/2WATT-10%) INS.
R5	686646	CARBON RESISTOR	(4.7 MEG Ω-1/2WATT-10%) INS.
R6	686548	CARBON RESISTOR	(27,000Ω-1/2WATT-10%) INS.
R7	686548	CARBON RESISTOR	(47,000Ω-1/2WATT-10%) INS.
R8	686627	CARBON RESISTOR	(27,000Ω-1WATT-10%) INS.
R9	686577	CARBON RESISTOR	(470,000Ω-1/2WATT-10%) INS.
R10	686031	CARBON RESISTOR	(100,000Ω-1/2WATT-10%) INS.
R11	686622	CARBON RESISTOR	(3300Ω-1/2WATT-10%) INS.
R12	686631	CARBON RESISTOR	(15,000Ω-1WATT-10%) INS.
R13	686577	CARBON RESISTOR	(470,000Ω-1/2WATT-10%) INS.
R14	686631	CARBON RESISTOR	(27,000Ω-1/2WATT-10%) INS.
R15	686622	CARBON RESISTOR	(3300Ω-1/2WATT-10%) INS.
R16	686548	CARBON RESISTOR	(47,000Ω-1/2WATT-10%) INS.
R17	686938	CARBON RESISTOR	(150,000Ω-1/2WATT-10%) INS.
R18	686630	CARBON RESISTOR	(10,000Ω-1WATT-10%) INS.
R19	686646	CARBON RESISTOR	(1 MEG Ω-1/2WATT-10%) INS.
R20	686646	CARBON RESISTOR	(1 MEG Ω-1/2WATT-10%) INS.
R21	686641	CARBON RESISTOR	(470,000Ω-1/2WATT-10%) INS.
R22	686646	CARBON RESISTOR	(1 MEG Ω-1/2WATT-10%) INS.
R23	686291	CARBON RESISTOR	(560Ω-1/2WATT-10%) INS.
R24	686627	CARBON RESISTOR	(27,000Ω-1WATT-10%) INS.
R25	686051	CARBON RESISTOR	(100,000Ω-1/2WATT-10%) INS.
R26	686548	CARBON RESISTOR	(47,000Ω-1/2WATT-10%) INS.
R27	686646	CARBON RESISTOR	(1 MEG Ω-1/2WATT-10%) INS.
R28	696660	CARBON RESISTOR	(1.5 MEG Ω-1/2WATT-10%) INS.
R29	686031	CARBON RESISTOR	(100,000Ω-1/2WATT-10%) INS.
R30	686627	CARBON RESISTOR	(27,000Ω-1WATT-10%) INS.

DIAG. NO.	PART NO.	DESCRIPTION	
R31	686660	CARBON RESISTOR	(1.5 MEGΩ-1/2WATT-10%) INS.
R32	686031	CARBON RESISTOR	(100,000Ω-1/2WATT-10%) INS.
R33	686627	CARBON RESISTOR	(27,000Ω-1WATT-10%) INS.
R34	*686031	CARBON RESISTOR	(100,000Ω-1/2WATT-10%) INS.
R35	686577	CARBON RESISTOR	(470,000Ω-1/2WATT-10%) INS.
R36	*686031	CARBON RESISTOR	(100,000Ω-1/2WATT-10%) INS.
R37	686646	CARBON RESISTOR	(1 MEG Ω-1/2WATT-10%) INS.
R38	686646	CARBON RESISTOR	(1 MEG Ω-1/2WATT-10%) INS.
R39	686577	CARBON RESISTOR	(470,000Ω-1/2WATT-10%) INS.
R40	686631	CARBON RESISTOR	(15,000Ω-1WATT-10%) INS.
R41	686646	CARBON RESISTOR	(1 MEG Ω-1/2WATT-10%) INS.
R42	686646	CARBON RESISTOR	(1 MEG Ω-1/2WATT-10%) INS.
R43	686646	CARBON RESISTOR	(1 MEG Ω-1/2WATT-10%) INS.
R44	686641	CARBON RESISTOR	(470,000Ω-1/2WATT-10%) INS.
R45	686628	CARBON RESISTOR	(68000Ω-1/2WATT-10%) INS.
R46	686080	CARBON RESISTOR	(4,700Ω-1/2WATT-10%) INS.
R47	686646	CARBON RESISTOR	(47,000Ω-1WATT-10%) INS.
R48	686641	CARBON RESISTOR	(470,000Ω-1/2WATT-10%) INS.
R49	686629	CARBON RESISTOR	(820,000Ω-1/2WATT-10%) INS.
R50	686627	CARBON RESISTOR	(280,000Ω-1/2WATT-10%) INS.
R51	606133	CARBON RESISTOR	(2.2 MEG Ω-1/2WATT-10%) INS.
R52	686527	CARBON RESISTOR	(1,000Ω-1WATT-10%) INS.
R53	686080	CARBON RESISTOR	(4,700Ω-1/2WATT-10%) INS.

*NOTE: R34 & R36 MUST BE MATCHED RESISTORS

L1	23A81256	ANTENNA PRIMARY COIL
L2	23A81256	ANTENNA SECONDARY COIL
L3	23A81256	NOISE LIMITER COIL & CONDENSER
L8	25881916	AUDIO CHOKE

DIAG. NO.	PART NO.	DESCRIPTION
T1R	1XB1311	OSC. COIL & SHIELD ASSEMBLY
T2R	1XB1312	R.F. COIL & SHIELD ASSEMBLY
T3R	1XB1313	I.F. COIL & SHIELD ASSEMBLY
T4R	1XB1314	I.F. COIL & SHIELD ASSEMBLY
T5R	1XB1315	I.F. COIL & SHIELD ASSEMBLY
T6R	1XB1316	I.F. COIL & SHIELD ASSEMBLY
T7R	1XB1317	I.F. COIL & SHIELD ASSEMBLY
T8R	1XB1318	DISCRIMINATOR COIL & SHIELD ASSEMBLY
T3	2588195	LINE MATCHING TRANSFORMER
J1	9420261	SINGLE CIRCUIT OPEN JACK
XTAL1	L8XB1187	M.F. CRYSTAL(FREQ. DEPENDS ON CHANNEL ASSIGNED)
XTAL2	L8XB1186	L.F. CRYSTAL(1755 KC)
SW1	L0AB1254	METER SWITCH (SP5T)

1ST IF = 4.3MC
2ND IF = 455KC
$F_O = \frac{F_C - 4.3}{6}$

Y2 = 4755KC
Y1 = A14

30-50MC RECEIVER
54A81503 Issue A
Section 8
Diagram 63D 82265

30-50MC RECEIVER

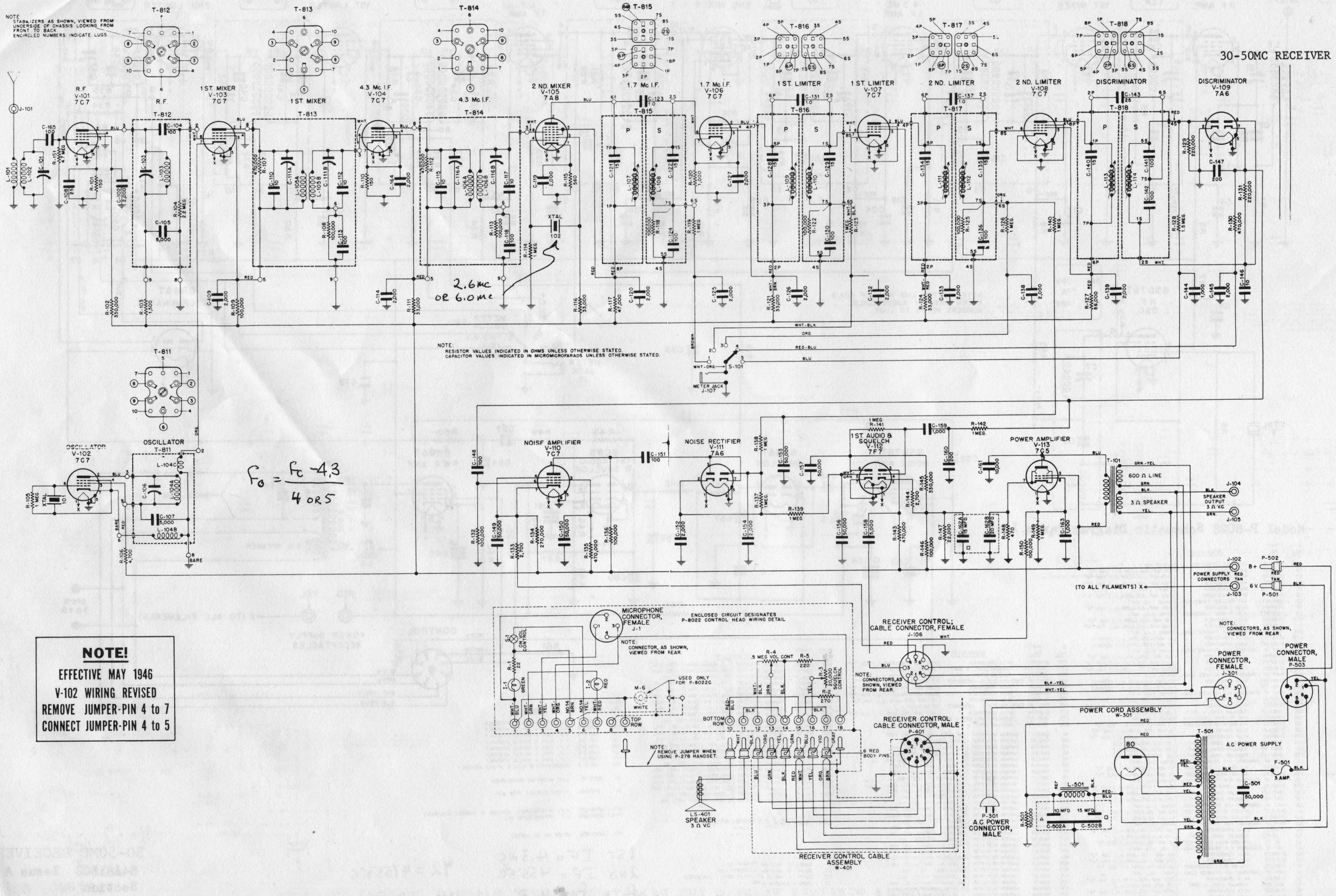

NOTE!

EFFECTIVE MAY 1946
V-102 WIRING REVISED
REMOVE JUMPER-PIN 4 to 7
CONNECT JUMPER-PIN 4 to 5

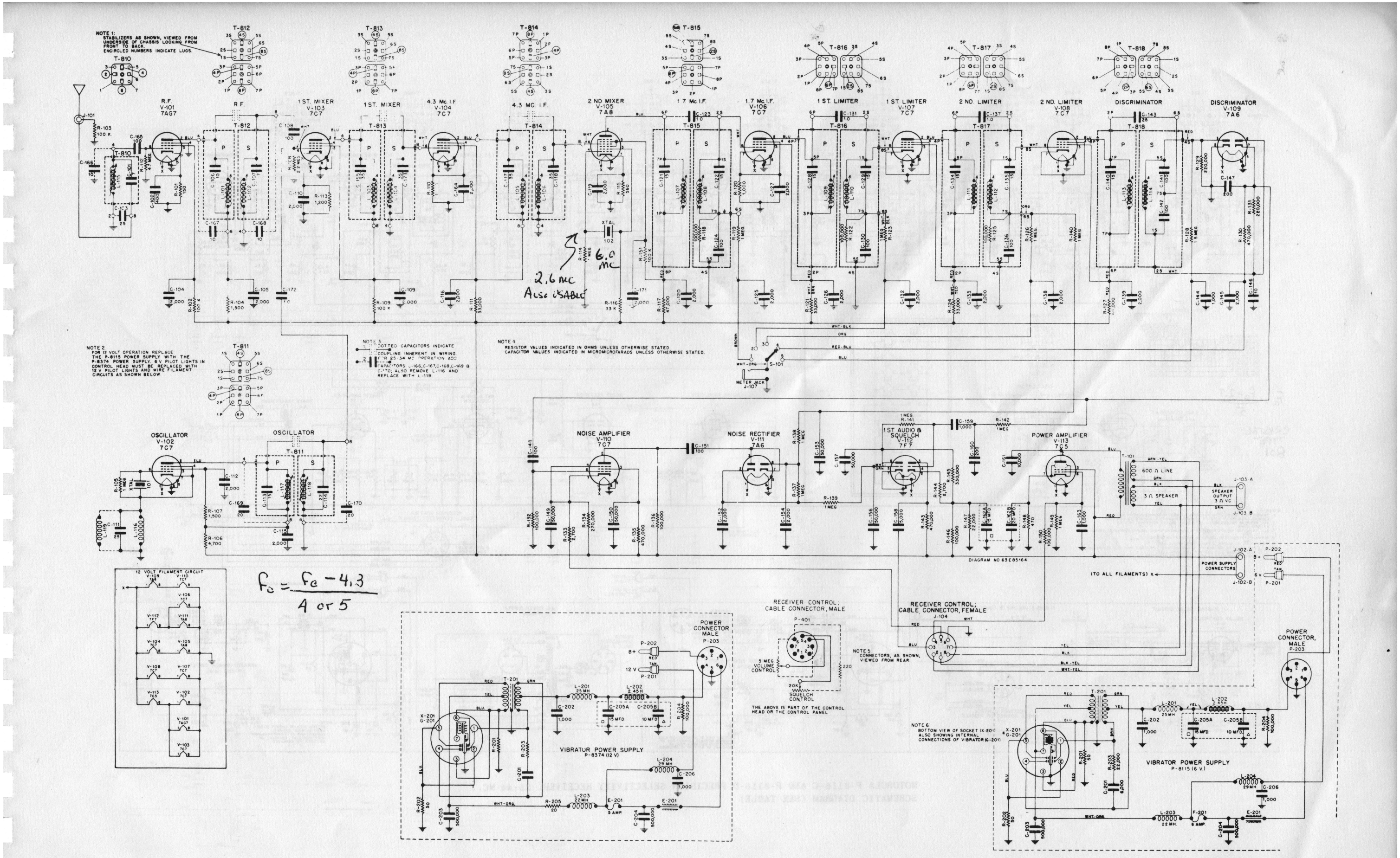

MOTOROLA RECEIVER PA-8119 AND PA-8373 SCHEMATIC DIAGRAM 30-50MC RECEIVER

PART NO. 63E85164
ISSUE B

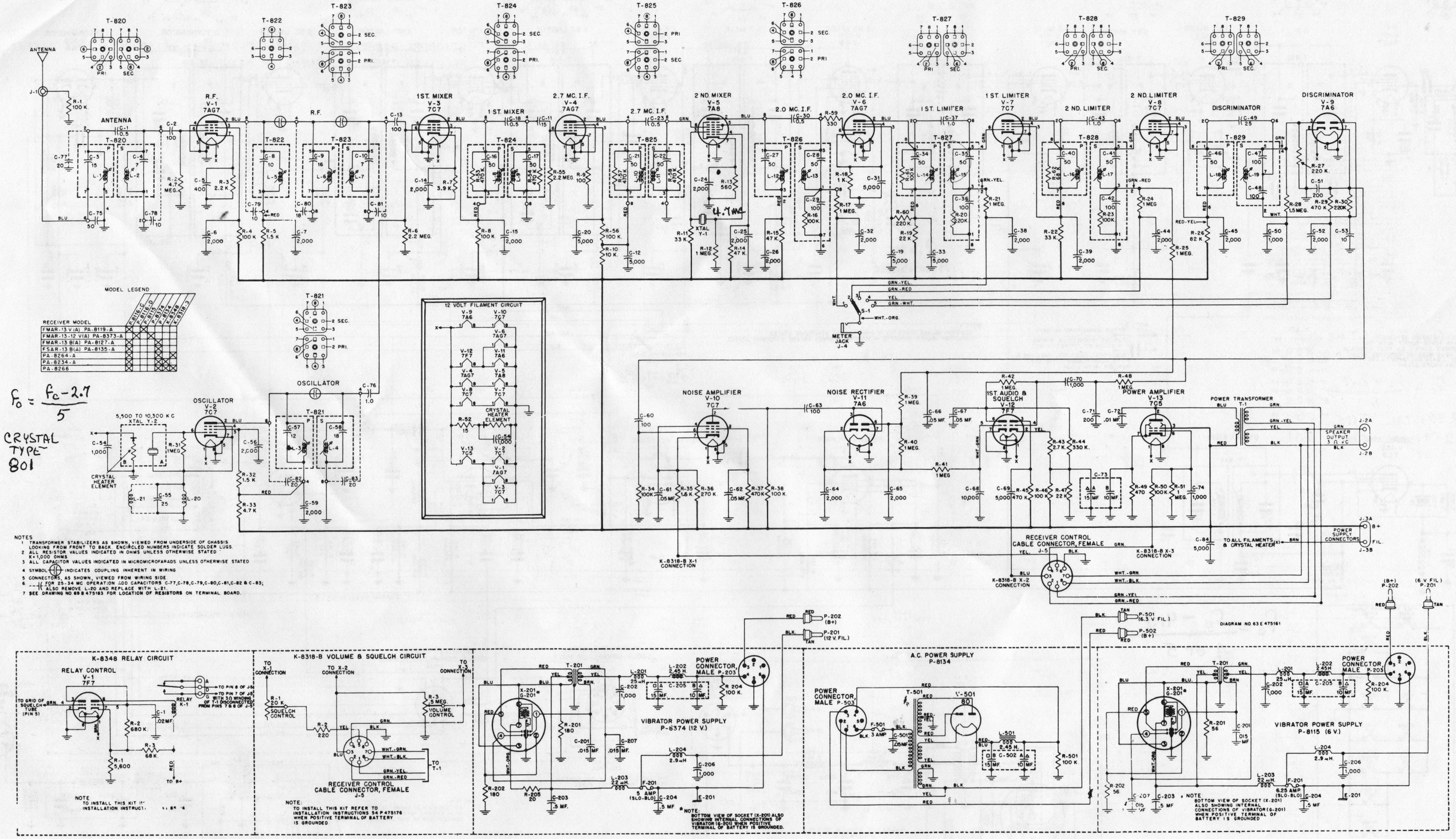

MOTOROLA P-8116-C AND P-8116-D PRECISION SELECTIVITY RECEIVER, 25-44 MC., SCHEMATIC DIAGRAM (SEE TABLE)

MOTOROLA P-8628, P-8628-A & P-8628-B, 25-50 MEGACYCLE *DISPATCHER* RECEIVER CHASSIS, SCHEMATIC DIAGRAM

PART NO. 63E880363
ISSUE -C 11/2/49

NOTES:
1. COIL STABILIZERS, AS SHOWN, VIEWED FROM UNDERSIDE OF CHASSIS.
2. NUMBERS INDICATE TERMINAL LUGS ON COILS.
3. NUMBER ON SPRING INDICATES COIL NUMBER.
4. RESISTOR R-64 IS NOT USED WHEN SQUELCH CONTROL IS PROVIDED EXTERNALLY.
5. RESISTOR VALUES INDICATED IN OHMS UNLESS OTHERWISE STATED. K=1,000 OHMS.
6. CAPACITOR VALUES INDICATED IN MICROMICROFARADS UNLESS OTHERWISE STATED.
7. THIS SYMBOL REPRESENTS CAPACITORS ADDED FOR OPERATION IN 25-30 MC OR 30-40 MC RANGE.
   'L' LETTER AFTER CIRCUIT SYMBOLS INDICATES COMPONENT USED FOR OPERATION IN THE 25-30 MC RANGE.
   'M' LETTER AFTER CIRCUIT SYMBOLS INDICATES COMPONENT USED FOR OPERATION IN THE 30-40 MC RANGE.
   'H' LETTER AFTER CIRCUIT SYMBOLS INDICATES COMPONENT USED FOR OPERATION IN THE 40-50 MC RANGE.
8. FOR OPERATION IN THE 30-40 MC. RANGE, CAPACITORS C-5H, R, C-11H ARE TO BE USED IN ADDITION TO CAPACITORS C-5M & C-11M.
9. LEADS FROM E, 9 & 10 OF P-1 ARE PROVIDED FOR FUTURE APPLICATIONS.
10. FOR 12 VOLT OPERATION ADD 2 RESISTORS R-66 & R-67 TO FILAMENT CIRCUIT AND REWIRE FILAMENTS AS SHOWN.
11. SQUELCH CONTROL INCLUDED ON P-8628 B CHASSIS.

2ND IF = 1.7 mc
1ST IF = 2.7 mc

$$f_o = \frac{f_c - 2.7}{5}$$

Y-1 CRYSTAL TYPE R14
Y-2 CRYSTAL TYPE A01

DETAIL "A"

12 VOLT FILAMENT CIRCUIT (SEE NOTE 10)

E-1 TERMINAL BOARD DETAIL

Meter Position 1 2 3 4 5
Meter Reading 0 -10 -30 ±0 -8

DIAGRAM NO. 63E880363

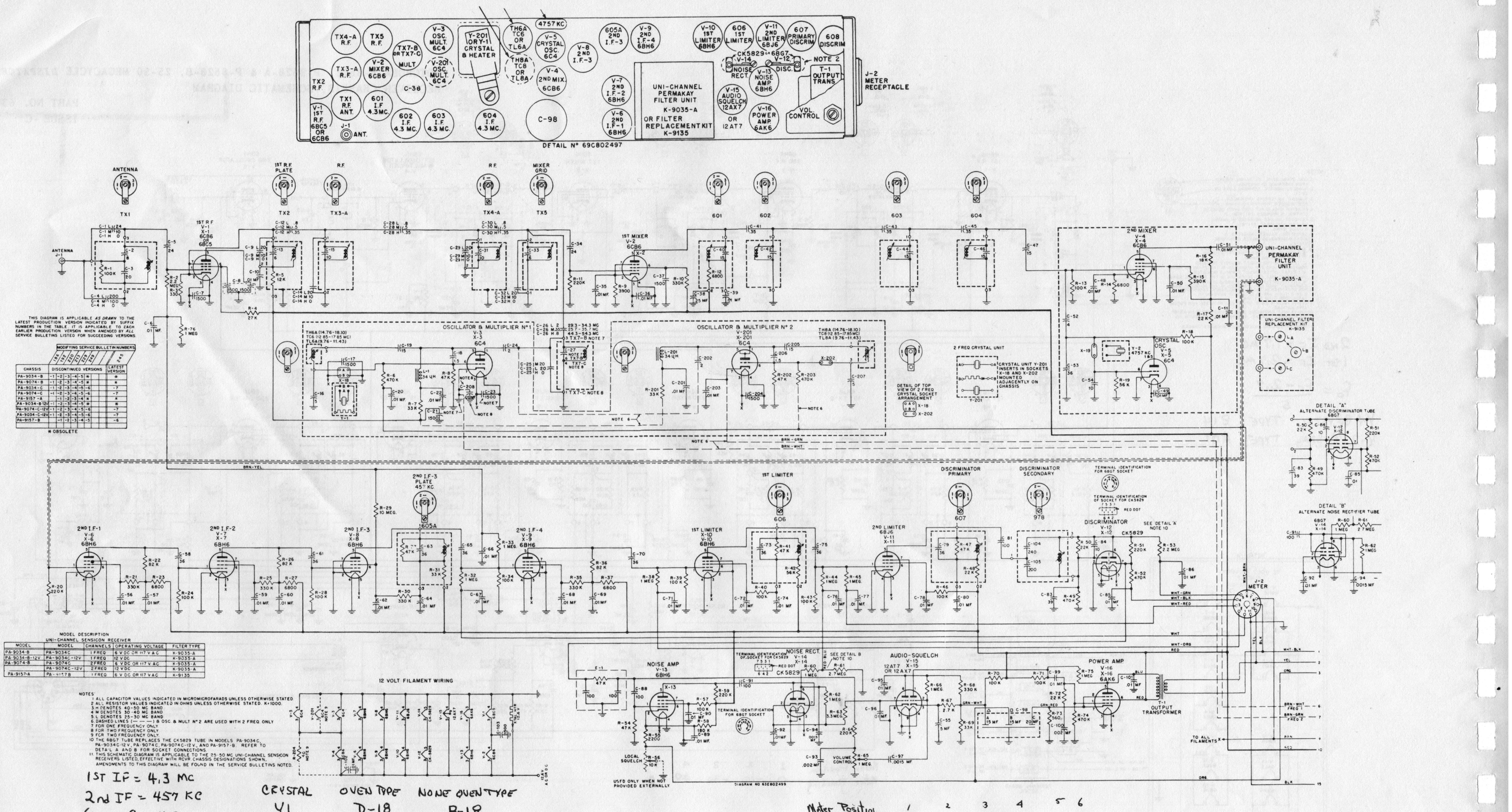

THIS DIAGRAM IS APPLICABLE AS DRAWN TO THE LATEST PRODUCTION VERSION INDICATED BY SUFFIX NUMBERS IN THE TABLE. IT IS APPLICABLE TO EACH EARLIER PRODUCTION VERSION WHEN AMENDED BY ALL SERVICE BULLETINS LISTED FOR SUCCEEDING VERSIONS.

CHASSIS	DISCONTINUED VERSIONS	MODIFYING SERVICE BULLETIN NUMBERS	LATEST VERSION
PA-9034-B	-1 -2 -3 -4 -5 *		*
PA-9074-B	-1 -2 -3 -4 -5 *		*
PA-9034-C	-1 -2 -3 -4 -5 -6		-7
PA-9074-C	-1 -2 -3 -4 -5 -6		-7
PA-9157-A	-1 -2 -3 -4 *		*
PA-9034-B-12V	-1 -2 -3 -4 -5 *		*
PA-9074-C-12V	-1 -2 -3 -4 -5 -6		-7
PA-9034-C-12V	-1 -2 -3 -4 -5 -6		-7
PA-9157-B	-1 -2 -3 -4 -5		-6

* OBSOLETE

MODEL DESCRIPTION
UNI-CHANNEL SENSICON RECEIVER

MODEL	MODEL	CHANNELS	OPERATING VOLTAGE	FILTER TYPE
PA-9034-B	PA-9034C	1 FREQ	6 V DC OR 117 V AC	K-9035-A
PA-9034-B-12V	PA-9034C-12V	1 FREQ	12 V DC	K-9035-A
PA-9074-B	PA-9074C	2 FREQ	6 V DC OR 117 V AC	K-9035-A
	PA-9074C-12V	2 FREQ	12 V DC	K-9035-A
PA-9157-A	PA-9157-B	1 FREQ	6 V DC OR 117 V AC	K-9135

NOTES:
1. ALL CAPACITOR VALUES INDICATED IN MICROMICROFARADS UNLESS OTHERWISE STATED
2. ALL RESISTOR VALUES INDICATED IN OHMS UNLESS OTHERWISE STATED. K=1000.
3. H DENOTES 40-50 MC BAND
4. M DENOTES 30-40 MC BAND
5. L DENOTES 25-30 MC BAND
6. DASHED LINES (— — —) & OSC. & MULT Nº 2 ARE USED WITH 2 FREQ. ONLY
7. FOR ONE FREQUENCY ONLY
8. FOR TWO FREQUENCY ONLY
9. FOR TWO FREQUENCY ONLY
10. THE 6BQ7 TUBE REPLACES THE CK5829 TUBE IN MODELS PA-9034C, PA-9034C-12V, PA-9074C, PA-9074C-12V, AND PA-9157-B. REFER TO DETAIL A AND B FOR SOCKET CONNECTIONS.
11. THIS SCHEMATIC DIAGRAM IS APPLICABLE TO THE 25-50 MC UNI-CHANNEL SENSICON RECEIVERS LISTED, EFFECTIVE WITH RCVR CHASSIS DESIGNATIONS SHOWN. AMENDMENTS TO THIS DIAGRAM WILL BE FOUND IN THE SERVICE BULLETINS NOTED.

1ST IF = 4.3 MC
2nd IF = 457 KC
$f_o = \frac{f_c + 4.3}{3}$

CRYSTAL	OVEN TYPE	NONE OVEN TYPE
Y1	D-18	B-18
Y2	—	

Meter Position 1 2 3 4 5 6
Meter Reading -2 -15 -28 0 -20 -27
Nominal

A08 MOTOROLA SCHEMATIC DIAGRAM
25-50 MC. "UNI-CHANNEL SENSICON" RECEIVER

PART NO. 63E802499
ISSUE-D 9/51-CP

MOTOROLA SCHEMATIC DIAGRAM
1-FREQ. 25-50 MC. *UNI-CHANNEL SENSICON* RECEIVER

PART NO. 63E812029
ISSUE B 5/52-RS

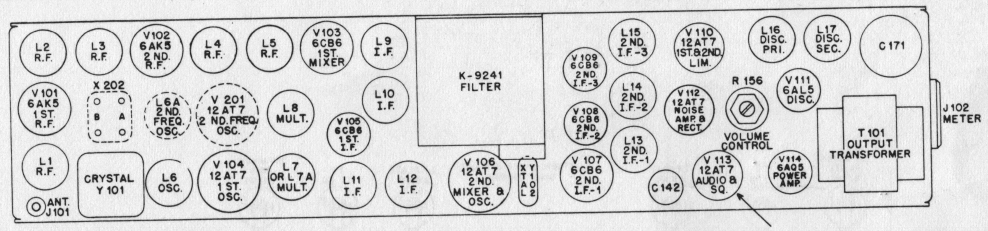

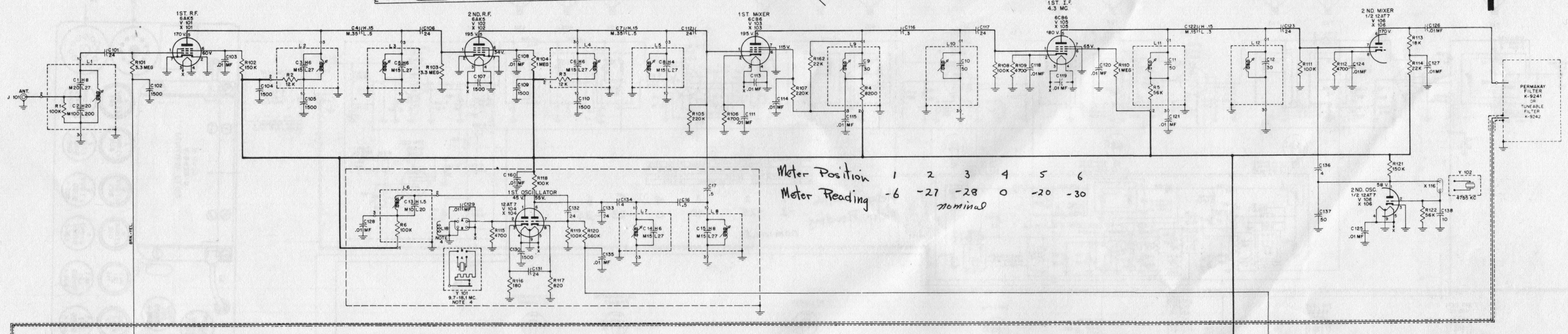

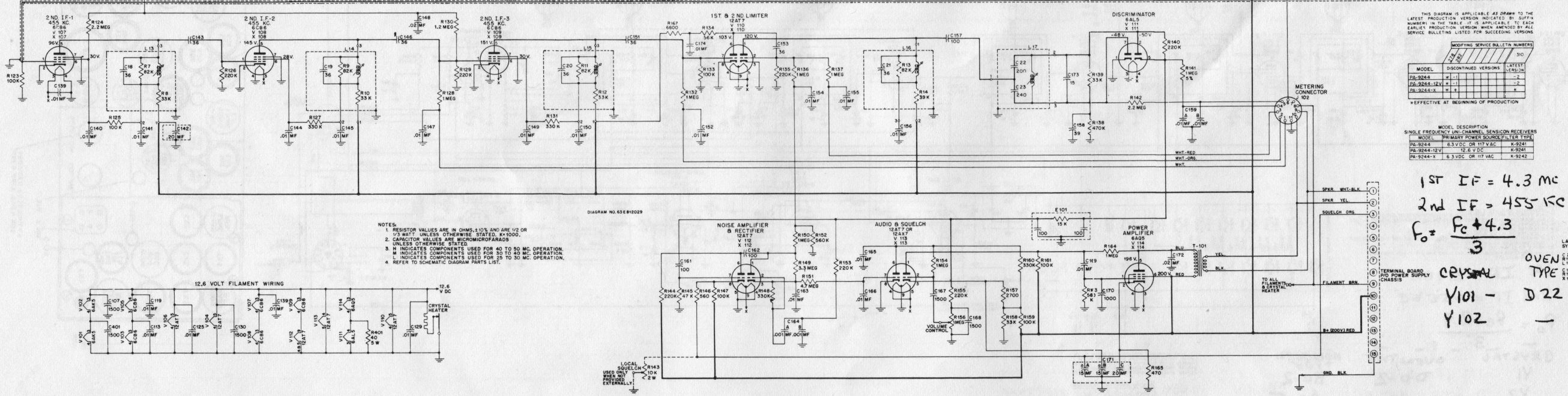

NOTES:
1. RESISTOR VALUES ARE IN OHMS, ±10% AND ARE ½ OR 1/3 WATT UNLESS OTHERWISE STATED. K=1000.
2. CAPACITOR VALUES ARE MICROMICROFARADS UNLESS OTHERWISE STATED.
3. N INDICATES COMPONENTS USED FOR 40 TO 50 MC. OPERATION.
M INDICATES COMPONENTS USED FOR 30 TO 40 MC. OPERATION.
L INDICATES COMPONENTS USED FOR 25 TO 30 MC. OPERATION.
4. REFER TO SCHEMATIC DIAGRAM PARTS LIST.

THIS DIAGRAM IS APPLICABLE AS DRAWN TO THE LATEST PRODUCTION VERSION INDICATED BY SUFFIX NUMBER IN THE TABLE. IT IS APPLICABLE TO EACH EARLIER PRODUCTION VERSION WHEN AMENDED BY ALL SERVICE BULLETINS LISTED FOR SUCCEEDING VERSIONS.

MODIFYING SERVICE BULLETIN NUMBERS: 310

MODEL	DISCONTINUED VERSIONS	LATEST VERSION
PA-9244	* -1	-2
PA-9244-12V	* -1	-2
PA-9244-X	* -1	*

*EFFECTIVE AT BEGINNING OF PRODUCTION

MODEL DESCRIPTION
SINGLE FREQUENCY UNI-CHANNEL SENSICON RECEIVERS

MODEL	PRIMARY POWER SOURCE	FILTER TYPE
PA-9244	6.3 VDC OR 117 VAC	K-9241
PA-9244-12V	12.6 V DC	K-9241
PA-9244-X	6.3 VDC OR 117 VAC	K-9242

1ST IF = 4.3 mc
2nd IF = 455 KC
$F_o = \frac{F_c + 4.3}{3}$

CRYSTAL	OVEN TYPE	NO OVEN TYPE
Y101 -	D 22	B 22
Y102	—	A 10

LAST CIRCUIT SYMBOL USED: C 23, R 18, L 18, C 174, R 187, X 116

MOTOROLA SCHEMATIC DIAGRAM
25-50 MC. TWO FREQUENCY *SENSICON* RECEIVER

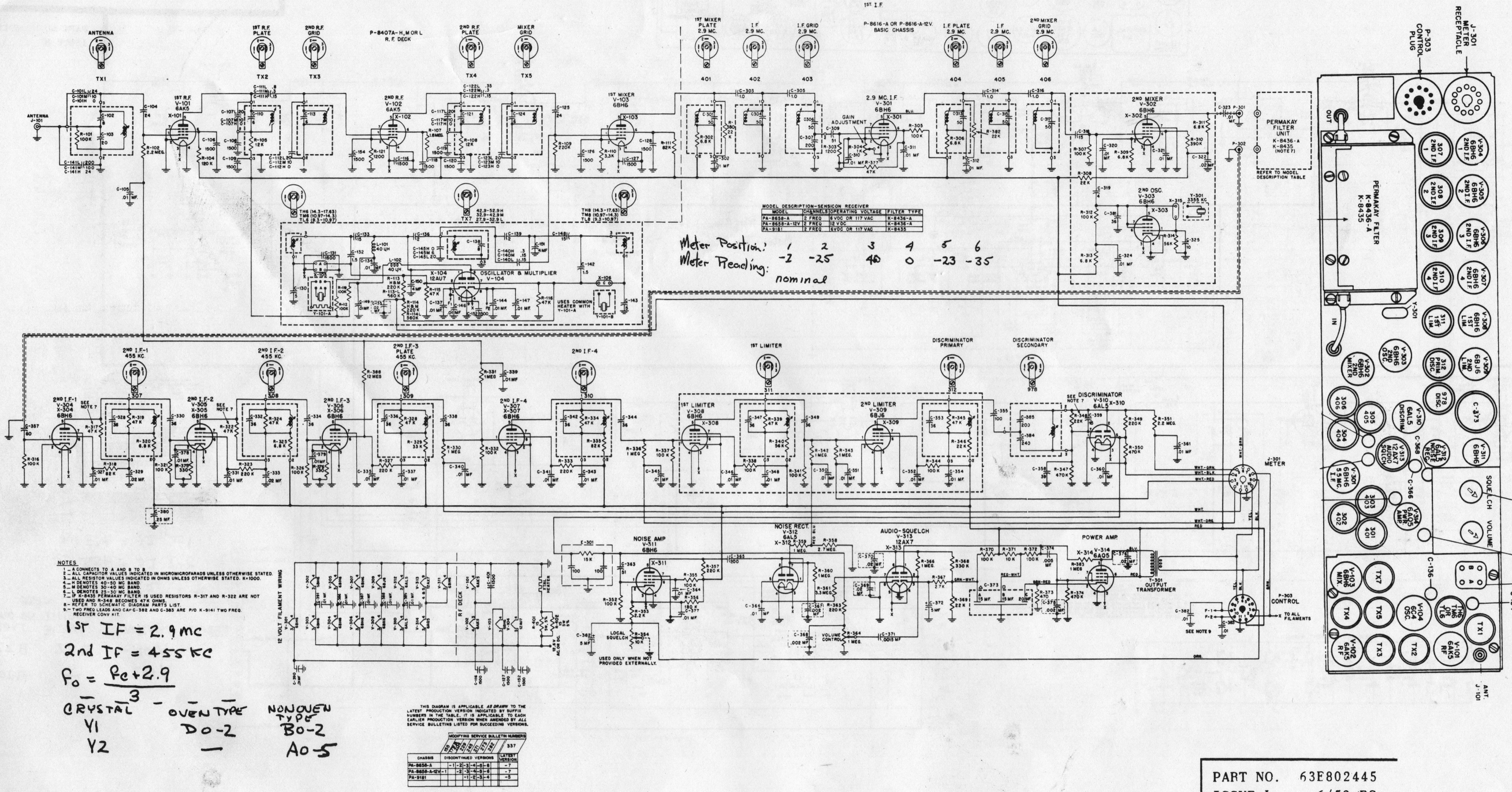

NOTES.
1.— A CONNECTS TO A AND B TO B.
2.— ALL CAPACITOR VALUES INDICATED IN MICROMICROFARADS UNLESS OTHERWISE STATED.
3.— ALL RESISTOR VALUES INDICATED IN OHMS UNLESS OTHERWISE STATED. K=1000.
4.— H DENOTES 140-150 MC BAND.
5.— M DENOTES 30-40 MC BAND.
6.— L DENOTES 25-30 MC BAND.
7.— IF K-8435 PERMAKAY FILTER IS USED RESISTORS R-317 AND R-322 ARE NOT USED AND R-348 BECOMES 47K OHMS.
8.— REFER TO SCHEMATIC DIAGRAM PARTS LIST.
9.— TWO FREQ LEADS AND CAP C-382 AND C-383 ARE P/O X-9141 TWO FREQ. RECEIVER CONV KIT.

1ST IF = 2.9 mc
2nd IF = 455 kc
$f_o = \frac{fc + 2.9}{3}$

CRYSTAL — OVEN TYPE — NONOVEN TYPE
Y1 — DO-2 — BO-2
Y2 — — AO-5

THIS DIAGRAM IS APPLICABLE AS DRAWN TO THE LATEST PRODUCTION VERSION INDICATED BY SUFFIX NUMBERS IN THE TABLE. IT IS APPLICABLE TO EACH EARLIER PRODUCTION VERSION WHEN AMENDED BY ALL SERVICE BULLETINS LISTED FOR SUCCEEDING VERSIONS.

CHASSIS	DISCONTINUED VERSIONS	LATEST VERSION
PA-8658-A	-1 -2 -3 -4 -5 -6	-7
PA-8658-A-12V-1	-2 -3 -4 -5 -6	-7
PA-9181	-1 -2 -3 -4	-5

PART NO. 63E802445
ISSUE-L 6/52-RS

25-50 MC., "SENSICON" RECEIVER SCHEMATIC DIAGRAM

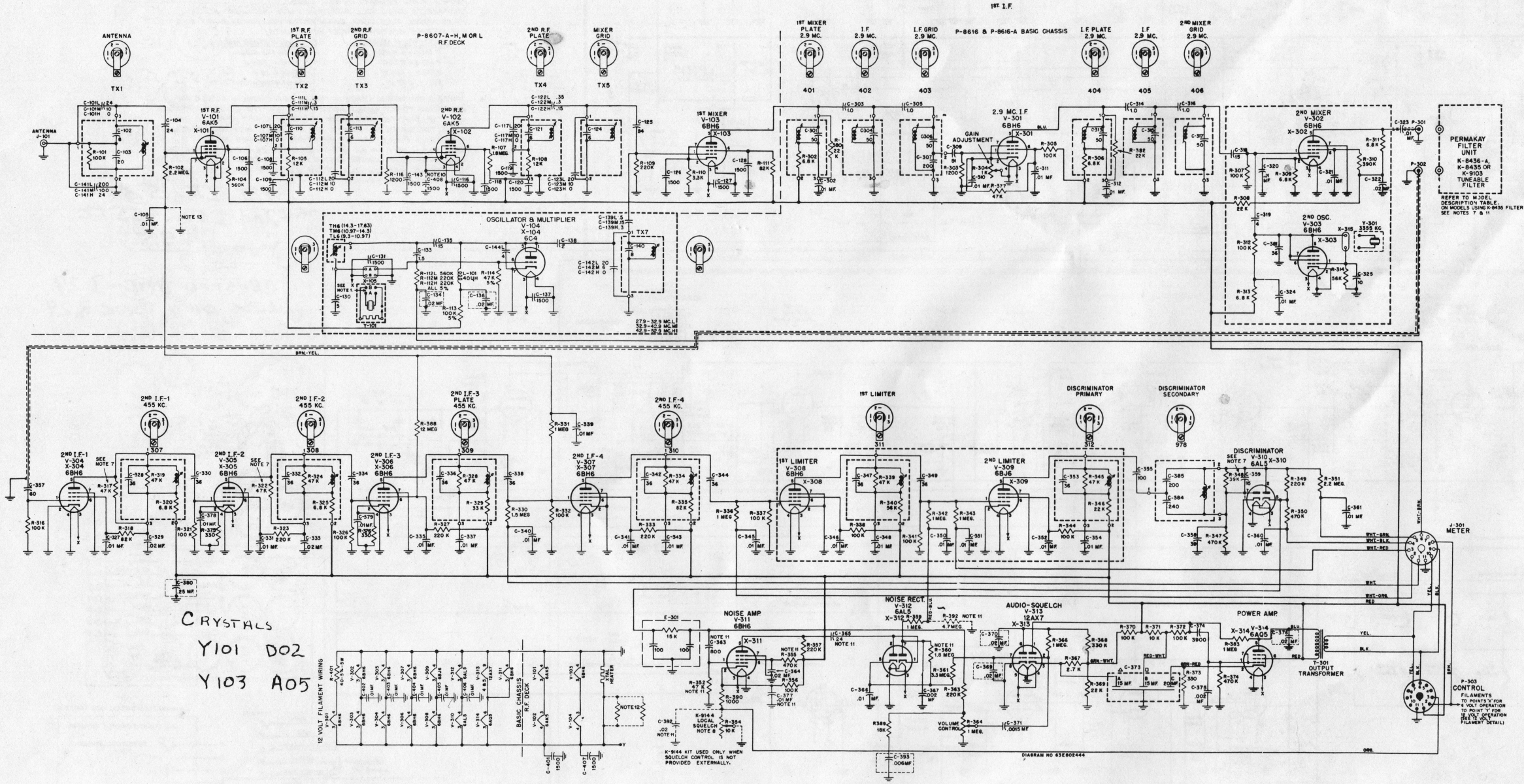

MODEL DESCRIPTION - SENSICON RECEIVER				
	MODEL	CHANNEL	OPERATING VOLTAGE	FILTER TYPE
OBSOLETE	PA-9137-12V	1 FREQ	12 VDC (6 V XTL, HTR.)	K-9103
	PA-8633-A	1 FREQ	6 VDC OR 117 VAC	K-8436-A
	PA-8663-A	1 FREQ	6 VDC OR 117 VAC	K-8435
OBSOLETE	PA-8619-A	1 FREQ	12 VDC (6 V XTL, HTR.)	K-8436-A
	PA-9265	1 FREQ	6 VDC OR 117 VAC	K-8436-A
	PA-9266	1 FREQ	6 VDC OR 117 VAC	K-9103
	PA-9137	1 FREQ	6 V DC OR 117 VAC	K-9103
OBSOLETE	PA-9219	1 FREQ	12 VDC (6 V XTL, HTR.)	K-8435
	PA-8619-B	1 FREQ	12 VDC (12 V XTL, HTR.)	K-8436-A
	PA-9219-A	1 FREQ	12 VDC (12 V XTL, HTR.)	K-8435
	PA-9137-A-12V	1 FREQ	12 VDC (12 V XTL, HTR.)	K-9103

NOTES:
1. - A CONNECTS TO A AND B TO B.
2. - ALL CAPACITOR VALUES INDICATED IN MICROMICROFARADS UNLESS OTHERWISE STATED. K=1000.
3. - ALL RESISTOR VALUES INDICATED IN OHMS UNLESS OTHERWISE STATED. K=1000.
4. - H DENOTES 42-50 MC BAND.
5. - M DENOTES 32-42 MC BAND.
6. - L DENOTES 25-30 MC BAND.
7. - IF K-8435 PERMAKAY FILTER IS USED RESISTORS R-317 AND R-322 ARE NOT USED AND R-348 BECOMES 47 K OHMS.
8. - PA-9265 & PA-9266 INCORPORATE LOCAL SQUELCH CONTROL.
9. - REFER TO SCHEMATIC DIAGRAM PARTS LIST.
10. - PARTS REFERENCED IN THE 400 SERIES ARE USED ON 12 VOLT MODELS ONLY.
11. - ON MODELS USING THE K-8435 FILTER, C-363 IS 100, C-365 IS 51, C-377 IS .02 MF, C-392 IS USED, R-392 IS USED, R-355 IS 220K, R-352 IS 82K, R-360 IS 1.5 MEG.
12. ON OBSOLETE MODELS PA-8619-A, PA-9219 AND PA-9137-12 V TWO PARALLEL 15 Ω 2% 5 WATT RESISTORS ARE USED INSTEAD OF DIRECT CONNECTION SHOWN.
13. GROUND JUMPER IS CONNECTED ONLY ON SETS USED IN MOBILE UNITS. JUMPER MAY BE REMOVED WHERE OBJECTIONABLE INTERMODULATION INTERFERENCE IS ENCOUNTERED.

THIS DIAGRAM IS APPLICABLE *AS DRAWN* TO THE LATEST PRODUCTION VERSION INDICATED BY SUFFIX NUMBER IN THE TABLE. IT IS APPLICABLE TO EACH EARLIER PRODUCTION VERSION WHEN AMENDED BY ALL SERVICE BULLETINS LISTED FOR SUCCEEDING VERSIONS.

| | MODIFYING SERVICE BULLETIN NUMBERS | | | |

MOTOROLA SCHEMATIC DIAGRAM
TWO FREQUENCY, 25-54 MC.
"UNI-CHANNEL SENSICON" RECEIVERS

TU111A-R2 BASIC CHASSIS

FREQ. RANGES
L = 25-30 MC
M = 30-40 MC
H = 40-50 MC
HH = 30-36 MC

NOTES:

1. REFER TO PARTS LIST.
2. ALL CAPACITOR VALUES INDICATED IN MICROMICROFARADS UNLESS OTHERWISE SPECIFIED.
3. ALL RESISTOR VALUES INDICATED IN OHMS UNLESS OTHERWISE STATED. K=1000 OHMS.
4. HEATER INPUT VOLTAGE FOR "X" FILAMENTS IS ALWAYS 6 VDC. "Z" AND "Y" INPUT VOLTAGES ARE ZERO (GND.) WHEN OPERATING FROM A 6 VDC PRIMARY POWER SOURCE OR 12 VDC WHEN OPERATING FROM A 12 VDC PRIMARY POWER SOURCE.
5. COMPONENTS NOTED WILL DIFFER IN VALUE BETWEEN -5 AND OTHER MODEL RECEIVERS. REFER TO THE FOLLOWING PARTS KITS FOR SPECIFIC IDENTIFICATION OF COMPONENTS:

TK 237 (P/O -5 MODELS)	TK 236 (P/O OTHER MODELS)
R 136 5 = 3.9 MEG.	R 136 = 12 MEG.
R 163 5 = 820 K	R 163 = 560 K
R 154 5 = 100 K	R 154 = 18 K
E 101 5 = 15 K	E 101 = 100 K

6. POWER AND CONTROL LEADS A THRU L ARE WIRED TO EITHER THE ASSOCIATED POWER SUPPLY OR THE TK 206 ADAPTER CHASSIS, DEPENDING UPON THE SPECIFIC APPLICATION OF THE RECEIVER. REFER TO CONNECTION DETAIL NO. 1 OR NO. 2 FOR APPLICABLE RECEIVER CONNECTIONS. (LETTERS A THRU L ARE FOR REFERENCE PURPOSES ONLY.)
7. GRN. LEAD IS USED ON ALL STANDARD TA111A-R2 SERIES MODELS. THIS LEAD IS OMITTED AND THE K-9354 VOLUME CONTROL KIT IS ADDED FOR ALL SPECIAL APPLICATIONS WHERE A DC TYPE VOLUME CONTROL IS NOT PROVIDED EXTERNALLY.

1ST IF = 5.5 mc
2nd IF = 455 KC
$f_o = \frac{f_c + 5.5}{3}$

CRYSTAL TYPE - D 29
LESS OVEN, TYPE R 29

HEATER (FILAMENT) WIRING

Meter Position 1 2 3 4 5 6
Meter Reading -6 -27 -28 0 -20 -30
← Nominal →

MODEL DESCRIPTION
25-54 MC 2-FREQ. RECEIVER

MODEL	APPLICATION	FILTER
TA111A-R2	MOBILE	TU 165
TA111A-X-R2	MOBILE	K 9242
TA111A-S-R2	MOBILE	K 9240

PART NO. 63E836166
ISSUE - O 6/54-RS

COMPREHENSIVE ALIGNMENT PROCEDURE FOR MOTOROLA SENSICON "G" RECEIVER

CE789A

HOW TO SET UP THE PORTABLE TEST SET FOR DISCRIMINATOR AND 455 KC. I.F. ALIGNMENT

1. Set the REC.-XMTR. -0-50 UA. switch to the REC. position.
2. Plug a 455 kc. crystal into the two-pin crystal socket.
3. Set the GRID CURRENT-METER-FIELD STRENGTH selector switch to the GRID CURRENT position.
4. Set the ATTENUATOR control for maximum output (10).
5. Place the test set ON-OFF switch in the ON position. (Test set operates on internal battery. Conserve battery life by keeping switch OFF when set is not in use.)
6. Adjust the frequency control (ADJ) for a maximum meter reading.
7. Set the ON-OFF switch to the OFF position.
8. Set the GRID CURRENT-METER-FIELD STRENGTH switch to the METER position.
9. Plug the test set metering cable into the METER receptacle on the receiver chassis.
10. Connect one end of the test set extension cable to the RF OUTPUT jack on the test set. Connect the other end of the extension cable to the RF probe cable.

TEST SET SWITCH POSITIONS

SWITCH POS.	1	2	3	4	5	6	7	8
CIRCUIT METERED	2nd IF-3 Grid	1st Lim. Grid	—	Disc. Output (balance)	Disc. Input	1st Osc. Grid	—	Audio Output Trans.

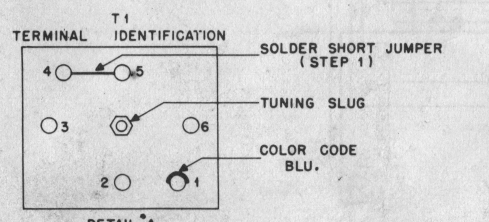

DETAIL "A"

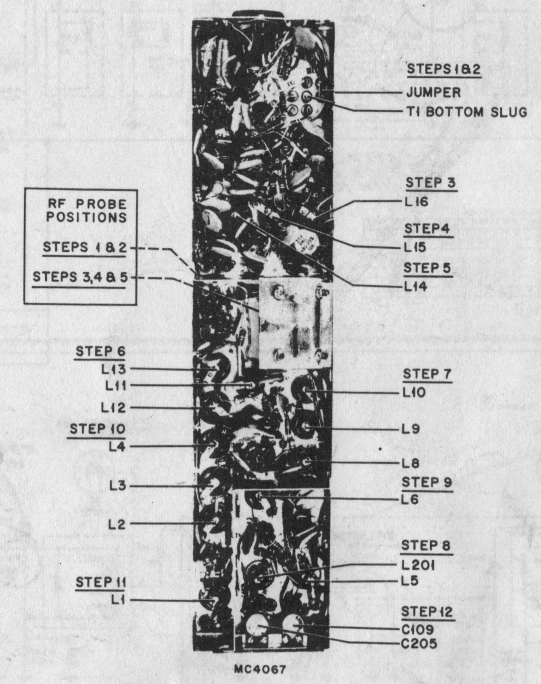

MC4067

HOW TO SET UP THE SIGNAL GENERATOR* FOR 5.5 MC. I.F. ALIGNMENT

1. Couple the signal generator output loosely to the grid (pin 7) of V105. Couple just enough input to give a small meter reading.
2. Set the test set selector switch to position +4 or -4. Set the ON-OFF switch to the ON position.
3. Set the signal generator frequency for approximately 5.5 mc.
4. Locate the exact 5.5 mc. point by rotating the generator dial back and forth around the 5.5 mc. setting until you obtain a meter reading of exactly zero (position 4). The meter reading should go above and below zero as the dial is rotated. Leave the generator set for zero meter reading. Make sure the signal remains constant throughout the alignment (generator may drift).

*Use MOTOROLA Model TU576 or Measurements Corp. Model 80.

STEP	STAGE, TEST CONDITIONS AND PROCEDURE	ALIGNMENT FREQUENCY	ADJUSTMENT	METERING	
				SWITCH POS.	READING
1	DISCRIMINATOR PRIMARY— Solder a short jumper across terminals 4 and 5 of the discriminator secondary coil (see DETAIL A, lower left). Set up the Portable Test Set as described in the left hand column. Place the test set selector switch in position 1 and set the ON-OFF switch to the ON position. Move the RF probe around near pin 1, V106, until the meter reading is at least 15 ua. Secure the probe in its position and place the selector switch in position 5. Loosen the locknut of the T1 bottom slug adjustment screw, adjust the slug for maximum meter reading and tighten the locknut while holding the slug in the position of maximum meter reading. Unsolder the jumper.	455 kc., sharp tuning	T1 bottom slug	5	Maximum
2	DISCRIMINATOR SECONDARY— With the RF probe placed as in step 1 adjust the top slug of T1 for exactly zero meter reading (selector switch in position +4 or -4).	455 kc., sharp tuning	T1 top slug	+4 or -4	Zero
3	455 KC. I.F. COIL L16— Place the RF probe near the input to the 455 kc. I.F. filter (see illustration). Couple the signal loosely so that an increase of signal strength will produce a linear increase in meter reading (switch in position 1 or 2). Secure the probe in position to keep the input at a constant level. Adjust L16 for a maximum meter reading with the switch in position 2.	455 kc., sharp tuning	L16	2	Maximum
4	455 KC. I.F. COIL L15— Couple the signal to the I.F. filter so as to obtain a maximum reading of approximately 5 ua. with the selector switch in position 1. Adjust L15 for a maximum reading.	455 kc., sharp tuning	L15	1	Maximum
5	455 KC. I.F. COIL L14— Use the same conditions as in step 4. Adjust L14 for a maximum meter reading. Place the test set ON-OFF switch in the OFF position and remove the RF probe.	455 kc., sharp tuning	L14	1	Maximum
6	5.5 MC. I.F. COILS L13, L12 and L11— Set up the Model 80 Signal generator (or equivalent) as described below the illustration. After adjusting the signal generator set the test set selector switch to position 1 or 2 and couple the generator output to the grid (pin 1) of V104. The signal must be coupled loosely so that an increase of signal strength produces a linear increase in meter reading (position 1 or 2). Adjust L13 for a maximum meter reading with the switch in pos. 1 or 2-note that two peaks are present within the coil tuning range. The peak found when the slug is nearest the top of the coil (as viewed from bottom of chassis) is the proper alignment peak. Adjust L12 and L11 for a maximum meter reading (position 1 or 2).	5.5 mc., sharp tuning	L13, L12 and L11	1 or 2	Maximum
7	5.5 MC. I.F. COILS L10, L9 and L8— Follow the same procedure as in step 6 except couple the signal to the grid (pin 6) of V103 and adjust L10, L9 and L8; no double peaks will be found.	5.5 mc., sharp tuning	L10, L9 and L8	1 or 2	Maximum
8	FIRST OSCILLATOR COIL L5 — Uncouple the signal generator. Position the ceramic trimmer, C109, so that the screwdriver adjustment slot is parallel with the length of the receiver chassis (see illustration). Adjust coil L5 for a maximum meter reading with the selector switch in position 6. On two-frequency receivers be sure that the F1-F2 switch on the control head is in the F1 position while adjusting L5. Then repeat the procedure with the switch in the F2 position while adjusting trimmer C205 and coil L201.	Receiver crystal frequency, sharp tuning	L5 (L201)	6	Maximum
9	OSC.-PLATE COIL L7 — The signal generator must be set for the exact carrier frequency to be received. To do this follow the procedure outlined below the illustration except select the carrier frequency instead of 5.5 mc. and couple the signal to pin 6 of V103 instead of pin 7, V105. With the generator output coupled loosely to pin 6, V103, adjust L7 for maximum meter reading (position 1 or 2).	Carrier frequency, sharp tuning	L7	1 or 2	Maximum
10	RF COILS L4, L3 and L2— Keep the signal generator set for the carrier frequency as in step 9. Couple the signal loosely to the grid (pin 1) of V101. Adjust L4, L3 and L2 for maximum reading (position 1 or 2).	Carrier freq., sharp tuning	L4, L3 and L2	1 or 2	Maximum
11	ANTENNA COIL L1— Connect the signal generator output to the antenna receptacle on the receiver chassis. Use a 6 db, 50 ohm, attenuation pad between the generator and the receiver input. Adjust L1 for maximum reading.	Carrier freq., sharp tuning	L1	1 or 2	Maximum
12	FREQUENCY CHECK— Transmit the carrier frequency from the transmitter which this receiver is normally intended to receive. A zero meter reading indicates that the receiver is on frequency. Adjust trimmer C109 to obtain a zero meter reading. Check the final setting by rotating C109 back and forth while observing the meter. The reading should go above and below the zero point as the trimmer is rotated. Set C109 for exactly zero meter reading. For 2-freq. receivers adjust C205 for the no. 2 frequency.	Carrier freq., sharp tuning	C109 (C205)	+4 or -4	Zero
13	IGNITION NOISE ADJUSTMENT— Install the receiver in the vehicle. Start the vehicle engine and allow it to run while making the adjustments. Turn the receiver ON and allow it to warm up for five minutes. Radiate a carrier frequency signal from a transmitter, signal generator or test set (see test set instruction manual). The signal should be just strong enough to produce quieting (20 to 30 db). Turn VOLUME control on control head to normal usable level. Plug the test set metering cable into the METER receptacle on the receiver. Set the selector switch to position 2 and note the meter reading. Adjust Coil L14 very slightly to reduce audible ignition noise. DO NOT reduce the meter reading more than one-half microampere.	Carrier freq., slight adj.	L14	2	Reduce audible noise

MOTOROLA
PART NO. EPD-869
ISSUE - O 9/57-RCS

NOTE:
USE THIS DIAGRAM FOR CONVERTING THE PA-8633 RECEIVER OR ANY VERSION OF THE PA-8633-A RECEIVER (AS INDICATED BY SUFFIX NUMBER FROM -0 THROUGH -22). THERE ARE 16 CHANGES SHOWN ENCIRCLED ON THIS DIAGRAM. CHECK YOUR RECEIVER AGAINST ALL 16 CIRCLES. IN MANY CASES THE RECEIVER CIRCUIT WILL AGREE WITH THE CIRCLED CHANGE. MAKE ONLY THE CHANGES REQUIRED. MOST RECEIVERS REQUIRE LESS THAN 10 CHANGES. SEE TEXT.

MODEL PA-8633-A SENSICON "A" RECEIVER SCHEMATIC DIAGRAM SHOWING ADDITION OF SK-9401-A SPLIT CHANNEL CONVERSION KIT

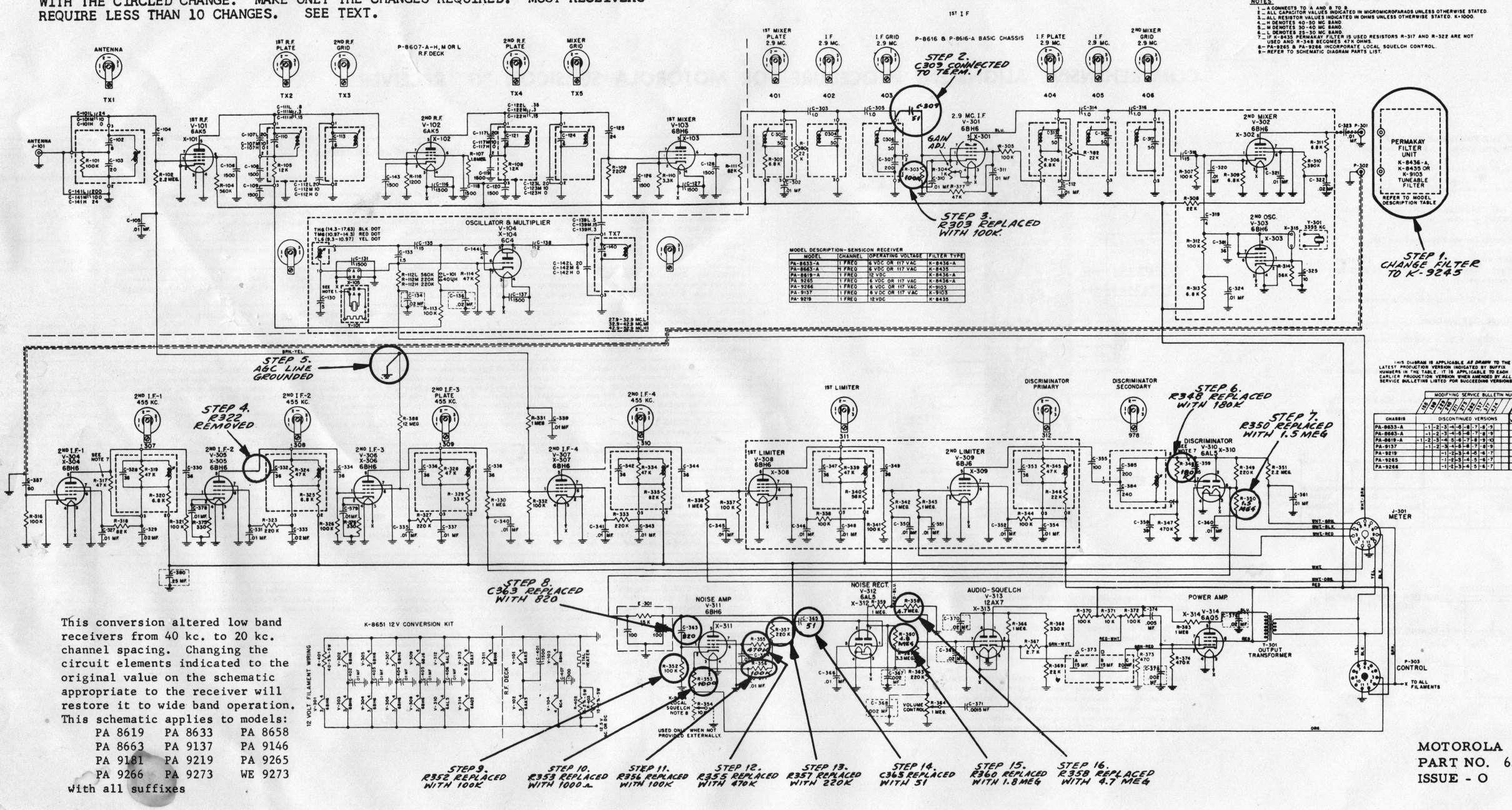

MODEL DESCRIPTION—SENSICON RECEIVER

MODEL	CHANNEL	OPERATING VOLTAGE	FILTER TYPE
PA-8633-A	1 FREQ	6 VDC OR 117 VAC	K-8436-A
PA-8663-A	1 FREQ	6 VDC OR 117 VAC	K-8435
PA-8619-A	1 FREQ	12 VDC	K-8436-A
PA-9265	1 FREQ	6 VDC OR 117 VAC	K-8436-A
PA-9266	1 FREQ	6 VDC OR 117 VAC	K-9103
PA-9137	1 FREQ	6 VDC OR 117 VAC	K-9103
PA-9219	1 FREQ	12 VDC	K-8435

THIS DIAGRAM IS APPLICABLE AS DRAWN TO THE LATEST PRODUCTION VERSION INDICATED BY SUFFIX NUMBERS IN THE TABLE. IT IS APPLICABLE TO EACH EARLIER PRODUCTION VERSION WHEN AMENDED BY ALL SERVICE BULLETINS LISTED FOR SUCCEEDING VERSIONS.

MODIFYING SERVICE BULLETIN NUMBERS

CHASSIS	DISCONTINUED VERSIONS	LATEST VERSION
PA-8633-A	-1 -2 -3 -4 -5 -6 -7 -8 -9	-10
PA-8663-A	-1 -2 -3 -4 -5 -6 -7 -8 -9	-10
PA-8619-A	-1 -2 -3 -4 -5 -6 -7 -8 -9 -10	-11
PA-9137	-1 -2 -3 -4 -5 -6 -7 -8 -9	-10
PA-9219	-1 -2 -3 -4 -5 -6 -7	-8
PA-9265	-1 -2 -3 -4 -5 -6 -7	-8
PA-9266	-1 -2 -3 -4 -5 -6 -7	-8

This conversion altered low band receivers from 40 kc. to 20 kc. channel spacing. Changing the circuit elements indicated to the original value on the schematic appropriate to the receiver will restore it to wide band operation. This schematic applies to models:

PA 8619	PA 8633	PA 8658
PA 8663	PA 9137	PA 9146
PA 9181	PA 9219	PA 9265
PA 9266	PA 9273	WE 9273

with all suffixes

MOTOROLA
PART NO. 63E845617
ISSUE - O 2/56

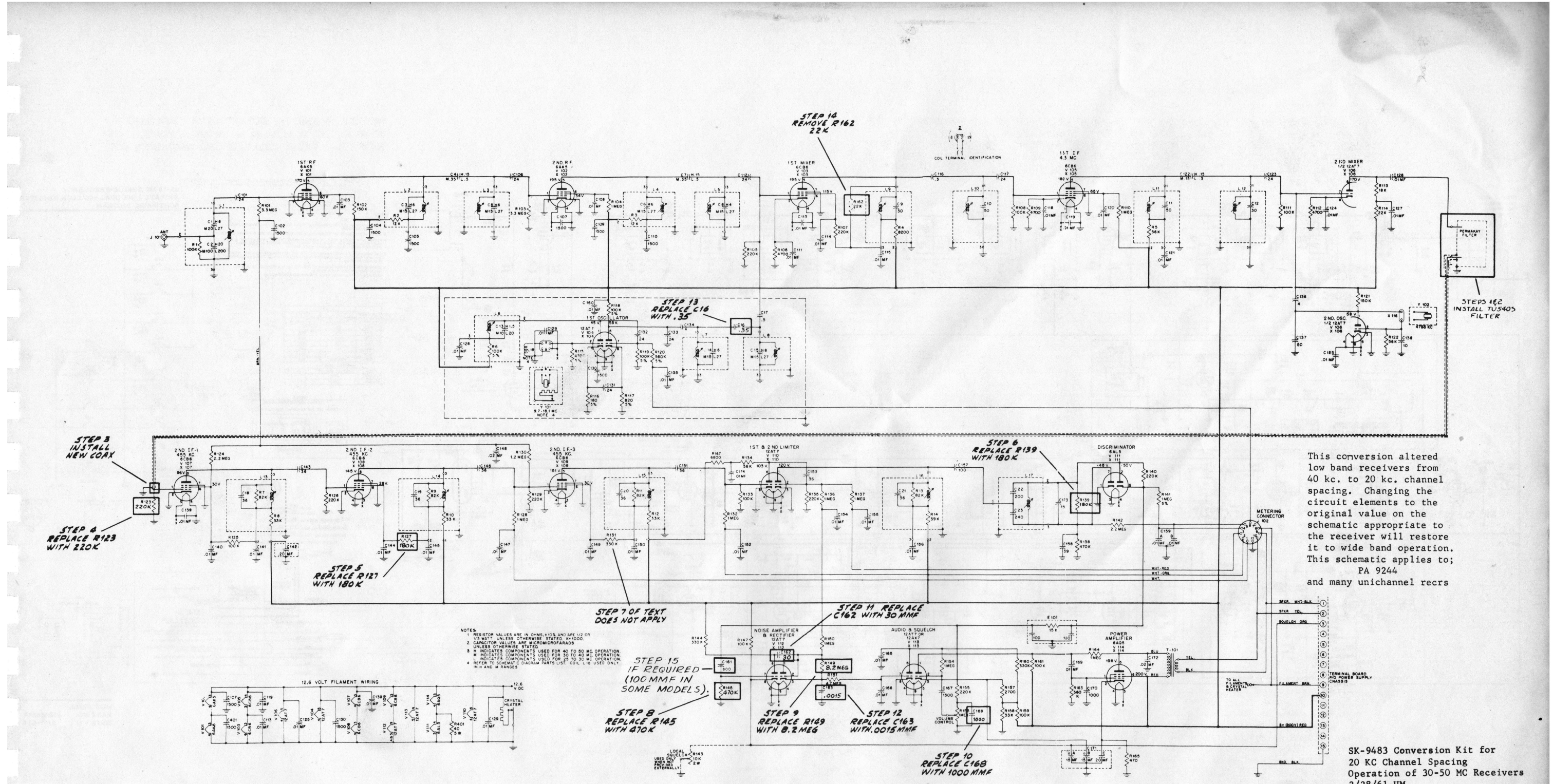

This conversion altered low band receivers from 40 kc. to 20 kc. channel spacing. Changing the circuit elements to the original value on the schematic appropriate to the receiver will restore it to wide band operation. This schematic applies to;

PA 9244

and many unichannel recrs

SK-9483 Conversion Kit for 20 KC Channel Spacing Operation of 30-50 MC Receivers 2/28/61-UM

25-50 MC SINGLE-FREQUENCY PRIVATE LINE DUAL SQUELCH RECEIVER SCHEMATIC DIAGRAM

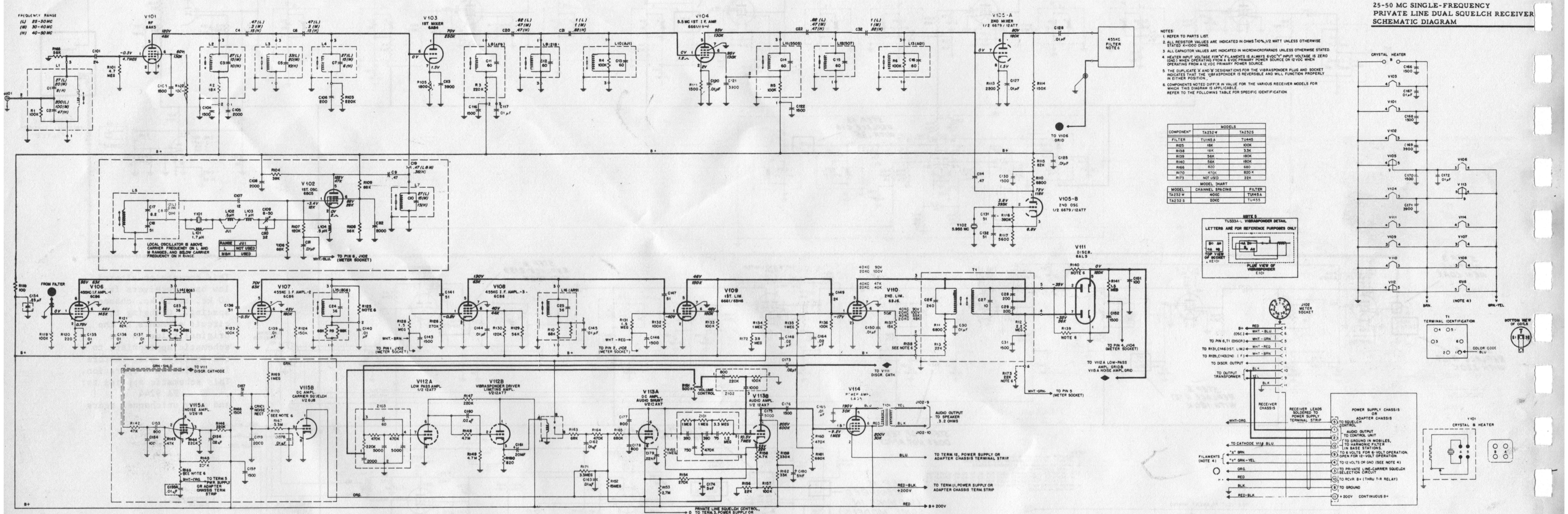
FREQUENCY RANGE
(L) 25-50 MC
(M) 30-40 MC
(H) 40-50 MC
V101 6U8A
V102 1ST. OSC. 6BC5
V103 1ST MIXER 6AB8
V104 5.5 MC 1ST. I.F. AMP. 6BA6/U-5-46
V105-A 2ND MIXER 1/2 6679/12AT7
V105-B 2ND OSC 1/2 6679/12AT7
5.900 MC
455KC FILTER NOTE 6
V106 455KC I.F. AMPL.-1 6CB6
V107 455KC I.F. AMPL.-2 6CB6
V108 455KC I.F. AMPL.-3 6CB6
V109 1ST. LIM. 6661/6BH6
V110 2ND. LIM. 6BJ6
V111 DISCR. 6AL5
V112A LOW PASS AMPL. 1/2 12AT7
V112B VIBRASPONDER DRIVER LIMITING AMPL. 1/2 12AT7
V113A DC AMPL. AUDIO SQUELCH 1/2 12AX7
V113B AUDIO AMPL. 1/2 12AX7
V114 POWER AMPL. 12A7
V115A NOISE AMPL. 1/2 6678
V115B DC AMPL. CARRIER SQUELCH 1/2 6678
LOCAL OSCILLATOR IS ABOVE CARRIER FREQUENCY ON L AND M RANGES, AND BELOW CARRIER FREQUENCY ON H RANGE.
RANGE JU1
L NOT USED
M&H USED
TO PIN 6, J102 (METER SOCKET)
FROM FILTER
TO PIN 1, J102 (METER SOCKET)
TO PIN 2, J102 (METER SOCKET)
TO PIN 4, J104 (METER SOCKET)
TO V112A LOW-PASS AMPL. GRID, V115A NOISE AMPL. GRID
TO PIN 5 (METER SOCKET)
TO V111 DISCR. CATHODE
TO V111 DISCR. CATH.
TO TERM 5 PWR SUPPLY OR ADAPTER CHASSIS TERM STRIP
PRIVATE LINE SQUELCH CONTROL
TO TERM 5, POWER SUPPLY OR ADAPTER CHASSIS TERM STRIP
VOLUME CONTROL
AUDIO OUTPUT TO SPEAKER 3.2 OHMS
TO TERM 10, POWER SUPPLY OR ADAPTER CHASSIS TERMINAL STRIP
TO TERM 11, POWER SUPPLY OR ADAPTER CHASSIS TERM STRIP
B+ 200V
TO VIBRASPONDER
TO VIBRASPONDER
TO VIBRASPONDER

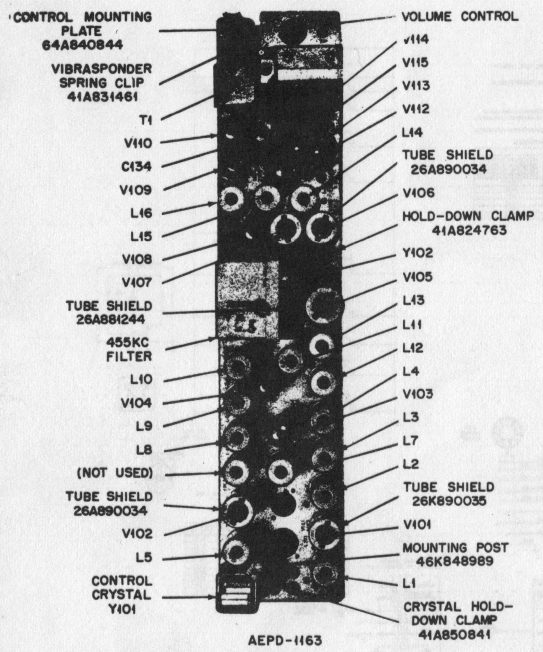

AEPD-1163

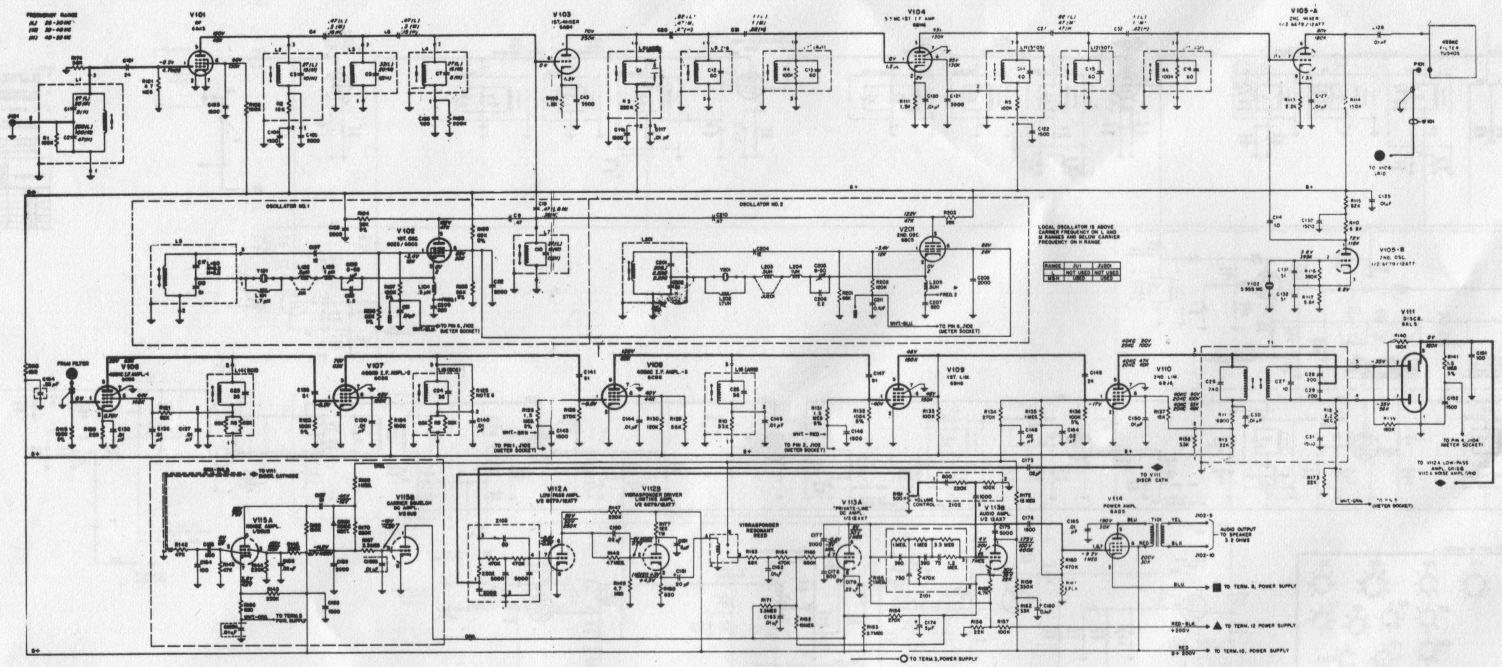

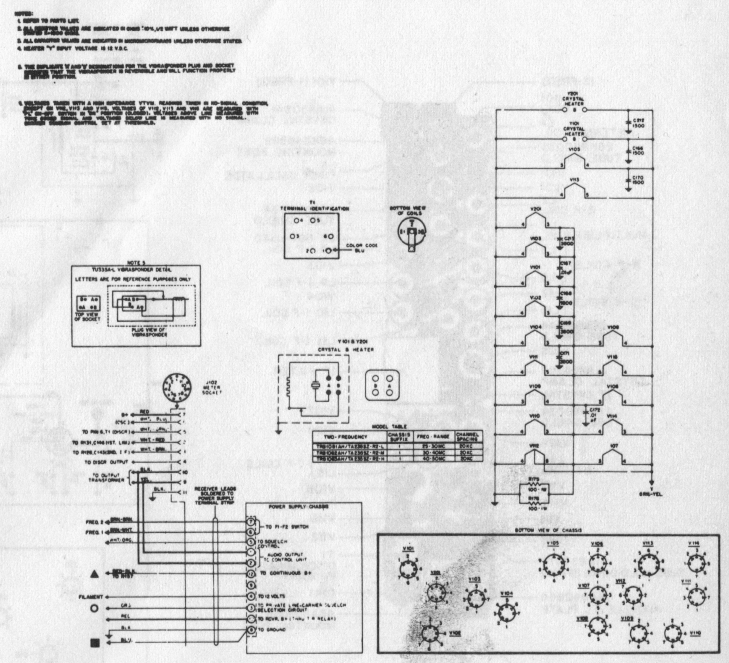

25-50 MC Two-Frequency
Dual Squelch Receiver
Schematic Diagram
Motorola No. 63E854993-B
7/8/59-RCS

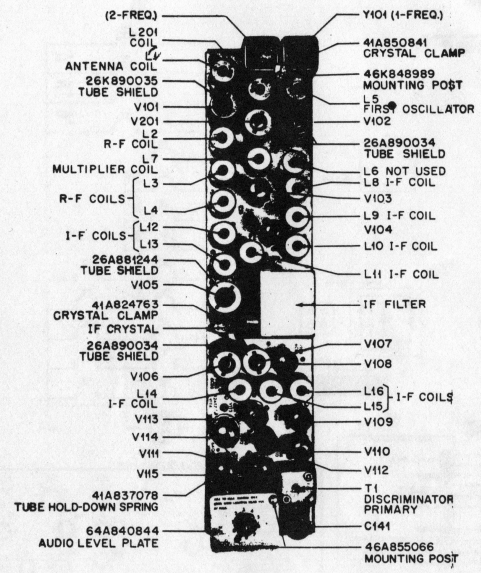

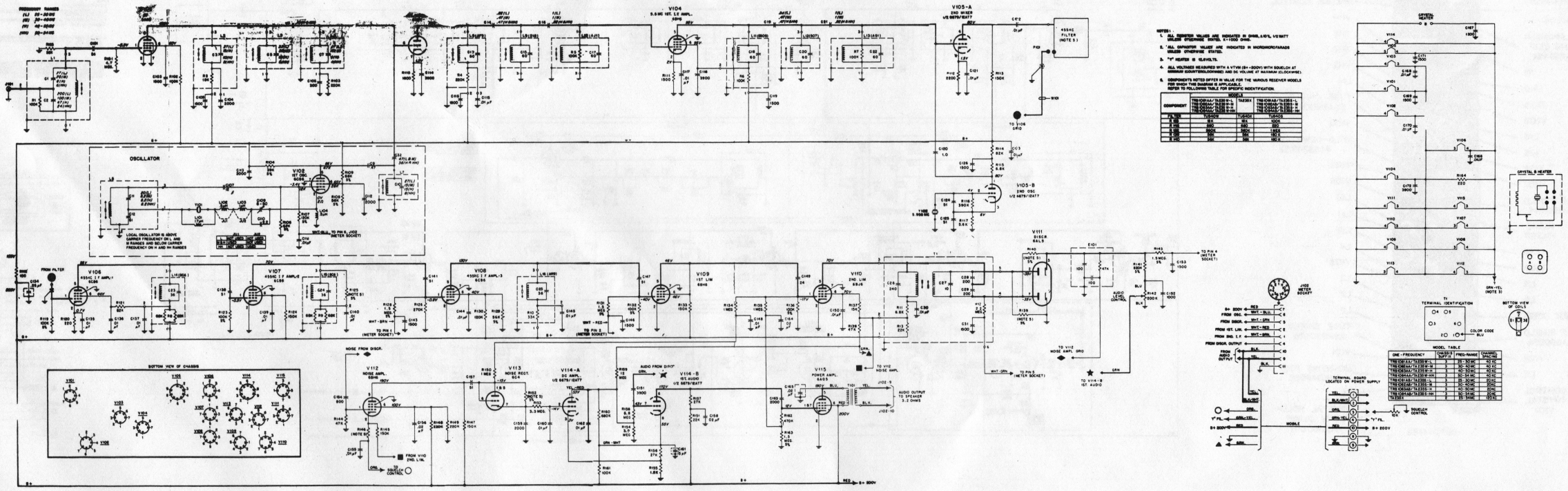

TRB1080/TA235 Single-Frequency Receiver
Schematic Diagram
Motorola No. 63E854952-E
11/16/59-RS

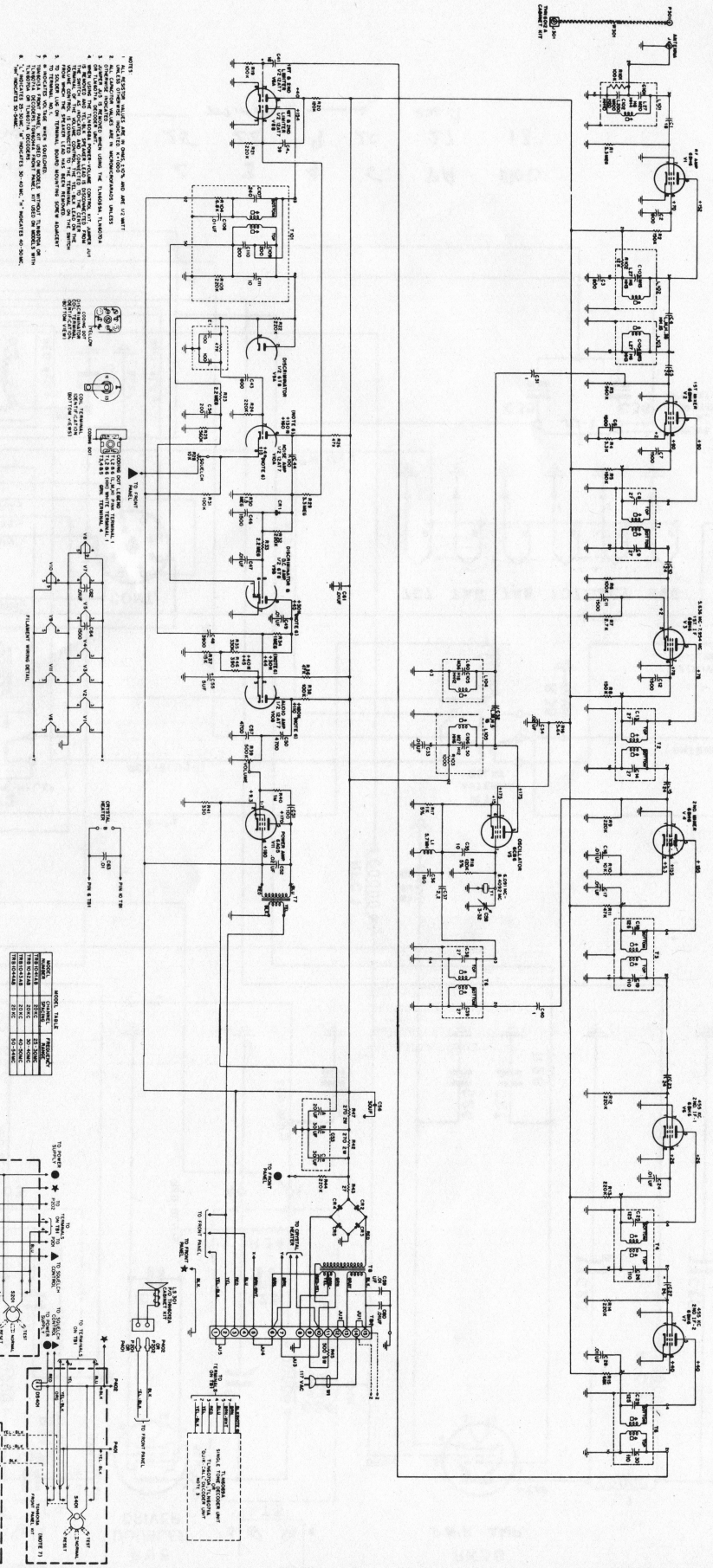

Receivers, 25-54 MC, 20 KC Channel Spacing
Schematic Diagram
Motorola No. 63E62444-O
7/28/59-RCS

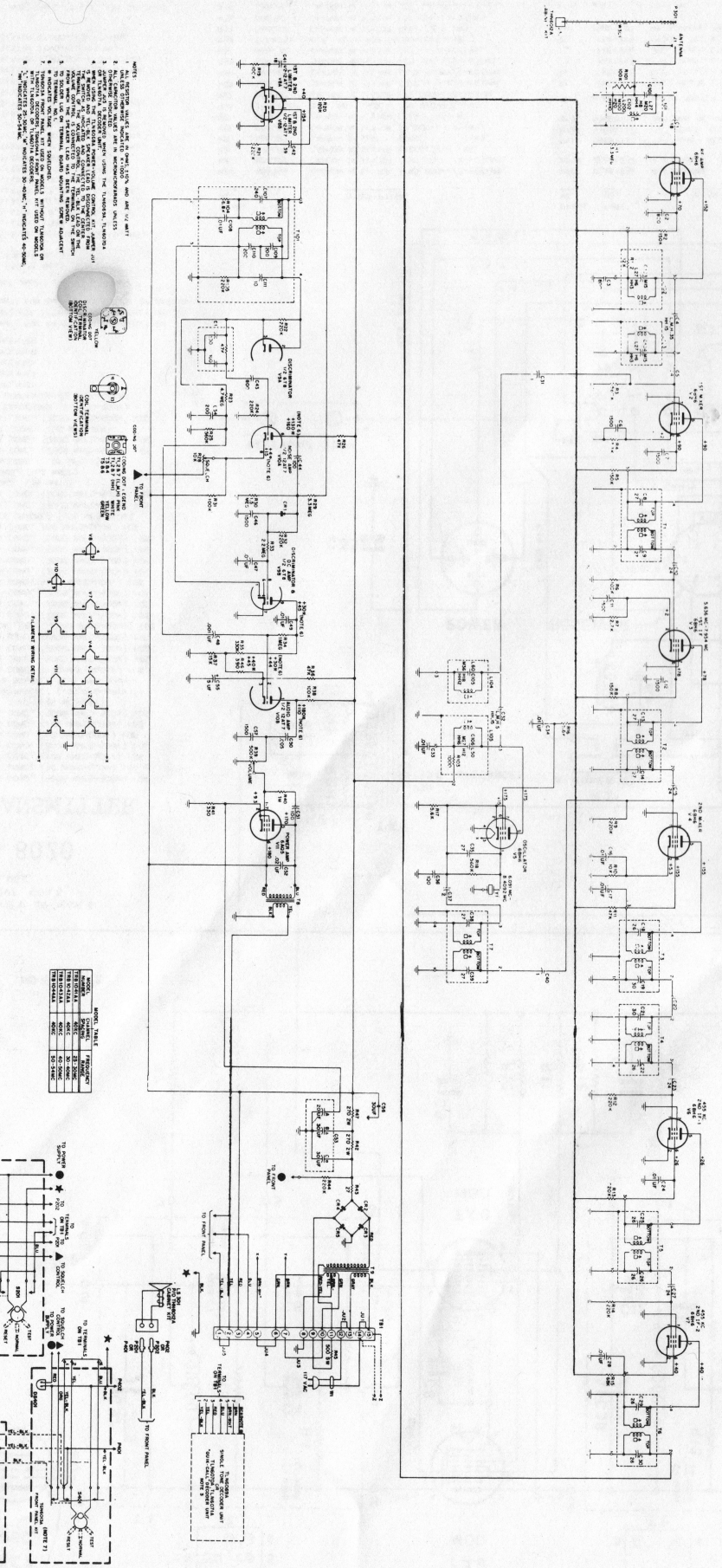

Receivers, 25-54 MC, 40 KC Channel Spacing
Schematic Diagram
Motorola No. 63E62443-O
7/28/59-RCS

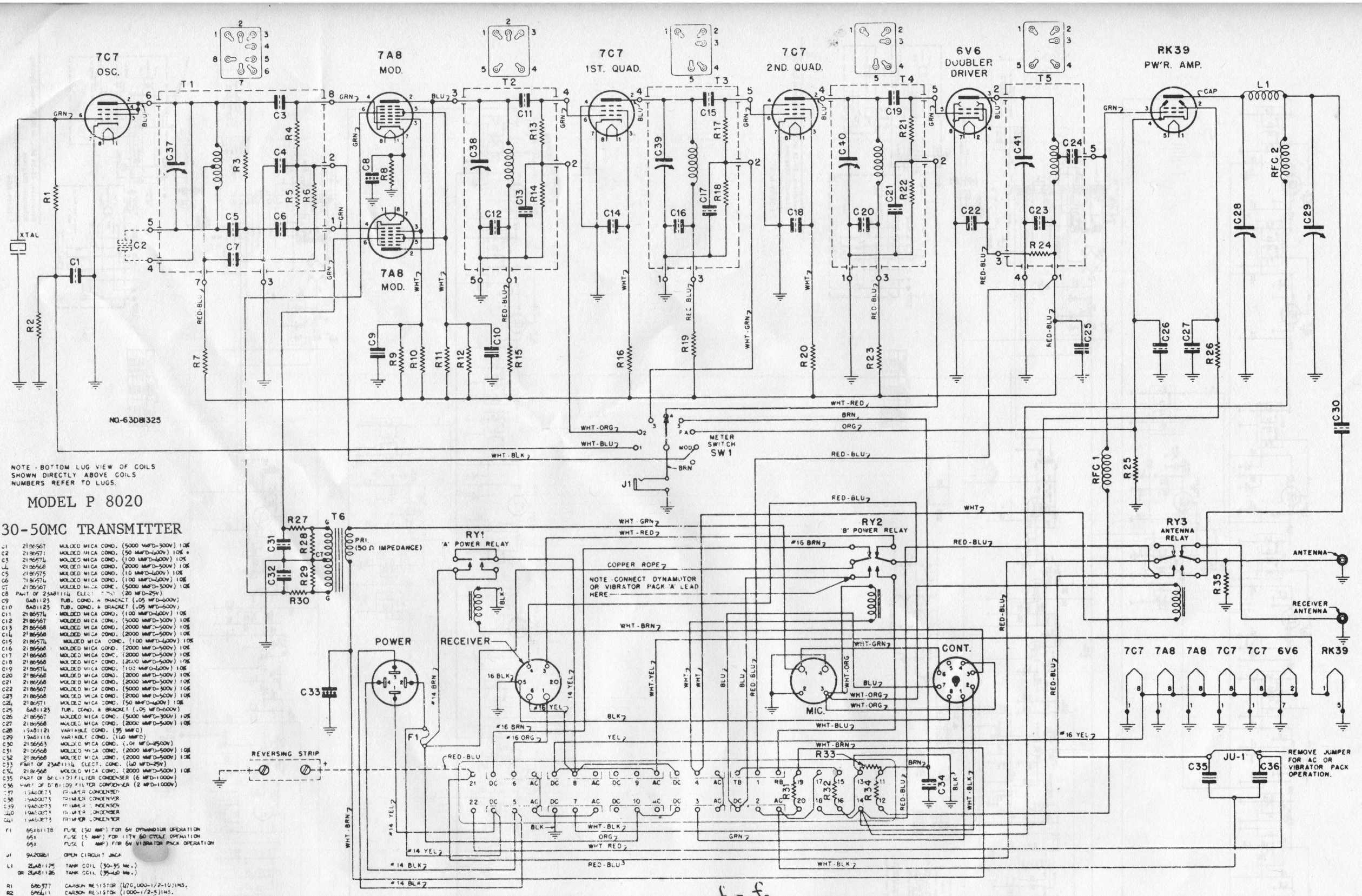

MODEL P 8020

30-50MC TRANSMITTER

DIAG. NO.	PART NO.	DESCRIPTION
C1	2186577	MOLDED MICA COND. (5000 MMFD-300V) 10%
C2	2186571	MOLDED MICA COND. (50 MMFD-400V) 10% *
C3	2186574	MOLDED MICA COND. (100 MMFD-400V) 10%
C4	2186568	MOLDED MICA COND. (2000 MMFD-500V) 10%
C5	2186575	MOLDED MICA COND. (10 MMFD-400V) 10%
C6	2186574	MOLDED MICA COND. (100 MMFD-400V) 10%
C7	2186567	MOLDED MICA COND. (5000 MMFD-300V) 10%
C8	PART OF 2A81116	ELECT. COND. (20 MFD-25V)
C9	8A81123	TUB. COND. & BRACKET (.05 MFD-600V)
C10	8A81123	TUB. COND. & BRACKET (.05 MFD-600V)
C11	2186574	MOLDED MICA COND. (100 MMFD-400V) 10%
C12	2186567	MOLDED MICA COND. (5000 MMFD-300V) 10%
C13	2186568	MOLDED MICA COND. (2000 MMFD-500V) 10%
C14	2186568	MOLDED MICA COND. (2000 MMFD-500V) 10%
C15	2186571	MOLDED MICA COND. (100 MMFD-400V) 10%
C16	2186568	MOLDED MICA COND. (2000 MMFD-500V) 10%
C17	2186568	MOLDED MICA COND. (2000 MMFD-500V) 10%
C18	2186568	MOLDED MICA COND. (2000 MMFD-500V) 10%
C19	2186574	MOLDED MICA COND. (100 MMFD-400V) 10%
C20	2186568	MOLDED MICA COND. (2000 MMFD-500V) 10%
C21	2186568	MOLDED MICA COND. (2000 MMFD-500V) 10%
C22	2186567	MOLDED MICA COND. (5000 MMFD-300V) 10%
C23	2186568	MOLDED MICA COND. (2000 MMFD-500V) 10%
C24	2186571	MOLDED MICA COND. (50 MMFD-400V) 10%
C25	8A81123	TUB. COND. & BRACKET (.05 MFD-600V)
C26	2186567	MOLDED MICA COND. (5000 MMFD-300V) 10%
C27	2186568	MOLDED MICA COND. (2000 MMFD-500V) 10%
C28	19A81121	VARIABLE COND. (35 MMFD)
C29	19A81116	VARIABLE COND. (160 MMFD)
C30	2186563	MOLDED MICA COND. (.01 MFD-850V)
C31	2186568	MOLDED MICA COND. (2000 MMFD-500V) 10%
C32	2186568	MOLDED MICA COND. (2000 MMFD-500V) 10%
C33	PART OF 2A81116	ELECT. COND. (40 MFD-25V)
C34	2186568	MOLDED MICA COND. (2000 MMFD-500V) 10%
C35	PART OF 8A81120	FILTER CONDENSER (6 MFD-1000V)
C36	PART OF 8A81120	FILTER CONDENSER (2 MFD-1000V)
C37	19A80273	TRIMMER CONDENSER
C38	19A80273	TRIMMER CONDENSER
C39	19A80273	TRIMMER CONDENSER
C40	19A80273	TRIMMER CONDENSER
C41	19A80273	TRIMMER CONDENSER
F1	65X81178	FUSE (50 AMP) FOR 6V DYNAMOTOR OPERATION
	65X	FUSE (5 AMP) FOR 117V 60 CYCLE OPERATION
	65X	FUSE (AMP) FOR 6V VIBRATOR PACK OPERATION
J1	9A20281	OPEN CIRCUIT JACK
L1	2A81125	TANK COIL (30-35 Mc.)
	OR 2A81126	TANK COIL (35-60 Mc.)

DIAG. NO.	PART NO.	DESCRIPTION
R1	686377	CARBON RESISTOR (470,000-1/2-10)1MS.
R2	686411	CARBON RESISTOR (1000-1/2-5)1MS.
R3	686520	CARBON RESISTOR (10,000-1/2-10)1MS.
R4	686548	CARBON RESISTOR (47,000-1/2-10)1MS.
R5	686548	CARBON RESISTOR (47,000-1/2-10)1MS.
R6	686608	CARBON RESISTOR (100-1/2-5)1MS.
R7	686420	CARBON RESISTOR (1,700-1/2-10)1MS.
R8	686542	CARBON RESISTOR (330-1/2-10)1MS.
R9	686531	CARBON RESISTOR (100,000-1/2-10)1MS.
R10	686531	CARBON RESISTOR (100,000-1/2-10)1MS.
R11	686610	CARBON RESISTOR (33,000-1/2-10) 1MS.
R12	686610	CARBON RESISTOR (33,000-1/2-10)1MS.
R13	686607	CARBON RESISTOR (2,700-1/2-10)1MS.
R14	686608	CARBON RESISTOR (100-1/2-5)1MS.
R15	686529	CARBON RESISTOR (1,000-1/2-10)1MS.
R16	686598	CARBON RESISTOR (150,000-1/2-10)1MS.
R17	686627	CARBON RESISTOR (220,000-1/2-10)1MS.
R18	686608	CARBON RESISTOR (100-1/2-5)1MS.
R19	686529	CARBON RESISTOR (1,000-1/2-10)1MS.
R20	686598	CARBON RESISTOR (150,000-1/2-10)1MS.
R21	686627	CARBON RESISTOR (220,000-1/2-10)1MS.
R22	686608	CARBON RESISTOR (100-1/2-5)1MS.
R23	686529	CARBON RESISTOR (1,000-1/2-10)1MS.
R24	686627	CARBON RESISTOR (220,000-1/2-10)1MS.
R25	686598	CARBON RESISTOR (150,000-1/2-10)1MS.
R26	686627	CARBON RESISTOR (220,000-1/2-10)1MS.
R27	686598	CARBON RESISTOR (150,000-1/2-10)1MS.
R28	686627	CARBON RESISTOR (220,000-1/2-10)1MS.
R29	686597	CARBON RESISTOR (22,000-1/2-10)1MS.
R30	686530	CARBON RESISTOR (47,000-1/2-10)1MS.
R31	686530	CARBON RESISTOR (47,000-1/2-10)1MS.
R32	17A81251	W.W. RESISTOR (5000-10-5)1MS.
R33	686612	CARBON RESISTOR (68,000-1/2-10)1MS.
R34	686611	CARBON RESISTOR (47,000-1/2-10)1MS.
R35	686611	CARBON RESISTOR (47,000-1/2-10)1MS.

DIAG. NO.	PART NO.	DESCRIPTION
RFC1	2A81232	R.F. CHOKE
RFC2	2A81232	R.F. CHOKE
RY1	59B81111	"A" POWER RELAY (D.P.S.T.)
RY2	53B81112	"B" POWER RELAY (D.P.D.T.)
RY3	55A81117	ANTENNA RELAY (D.P.D.T.)
SW1	64A81119	METER SWITCH (5 P. - 8T)
T1	1A81241	OSC. PLATE COIL & SHIELD ASSEMBLY
T2	1A81212	R.F. COIL & SHIELD ASSEMBLY
T3	1A81213	1ST. QUAD. COIL & SHIELD ASSEMBLY
T4	1A81214	2ND. QUAD. COIL & SHIELD ASSEMBLY
T5	1A81215	DOUBLER COIL & SHIELD ASSEMBLY
T6	45B81107	MICROPHONE TRANSFORMER
XTAL		CRYSTAL

* USED ONLY ON UNITS WHICH ARE TUNED TO L.F. END OF BAND

$f_o = \frac{f_c}{32}$

CRYSTAL
FMT-5

Meter Position	1	2	3	4	5	PA	MOD
Meter Reading	16	25	22	9	20	27	13
	← minimum →					exact	

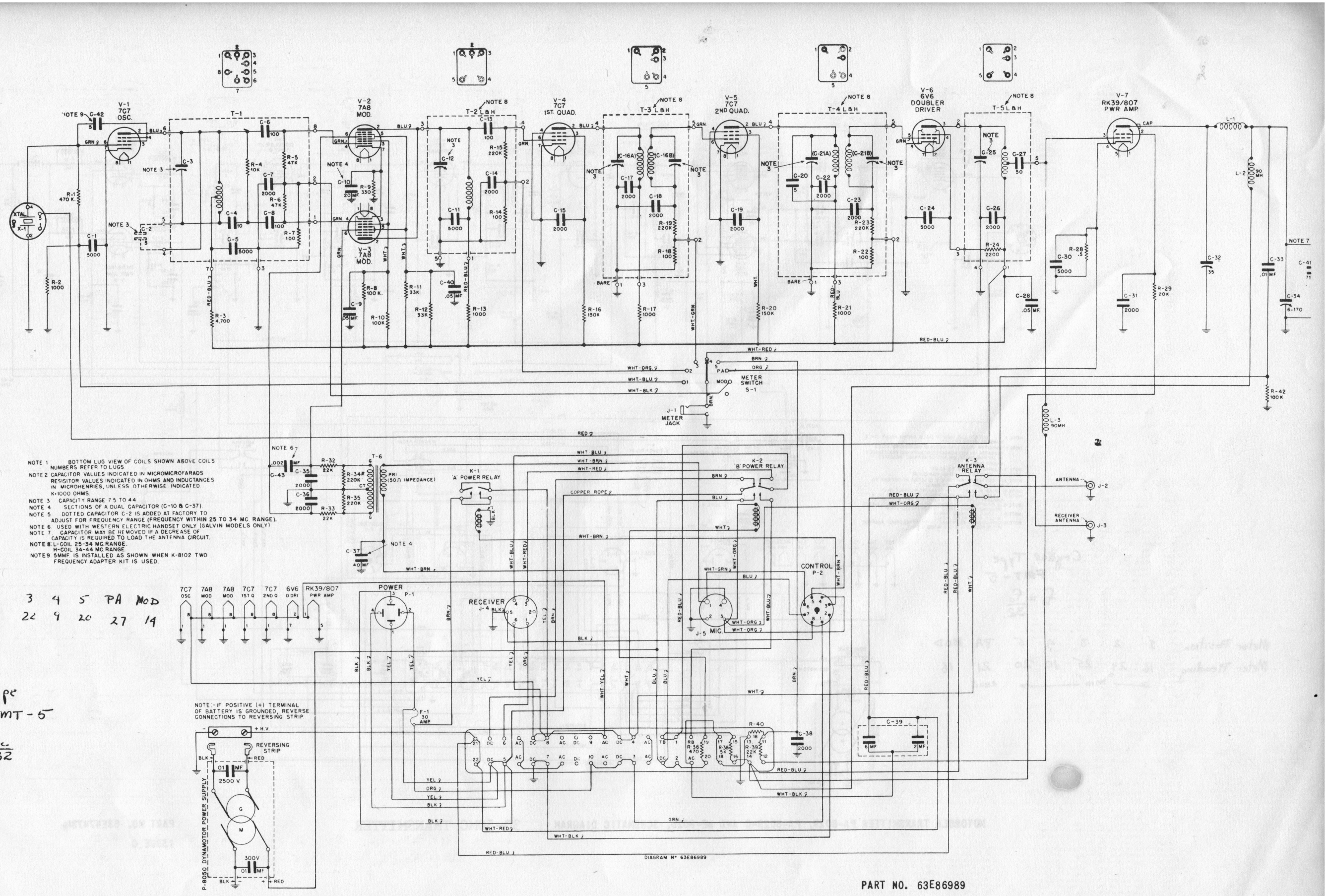

NOTE 1 BOTTOM LUG VIEW OF COILS SHOWN ABOVE COILS NUMBERS REFER TO LUGS

NOTE 2 CAPACITOR VALUES INDICATED IN MICROMICROFARADS RESISTOR VALUES INDICATED IN OHMS AND INDUCTANCES IN MICROHENRIES, UNLESS OTHERWISE INDICATED. K=1000 OHMS.

NOTE 3 CAPACITY RANGE 7.5 TO 44

NOTE 4 SECTIONS OF A DUAL CAPACITOR (C-10 & C-37)

NOTE 5 DOTTED CAPACITOR C-2 IS ADDED AT FACTORY TO ADJUST FOR FREQUENCY RANGE (FREQUENCY WITHIN 25 TO 34 MC RANGE).

NOTE 6 USED WITH WESTERN ELECTRIC HANDSET ONLY (GALVIN MODELS ONLY)

NOTE 7 CAPACITOR MAY BE REMOVED IF A DECREASE OF CAPACITY IS REQUIRED TO LOAD THE ANTENNA CIRCUIT.

NOTE 8 L-COIL 25-34 MC RANGE. H-COIL 34-44 MC RANGE.

NOTE 9 5MMF IS INSTALLED AS SHOWN WHEN K-8102 TWO FREQUENCY ADAPTER KIT IS USED.

NOTE - IF POSITIVE (+) TERMINAL OF BATTERY IS GROUNDED REVERSE CONNECTIONS TO REVERSING STRIP

Meter Pos.	1	2	3	4	5	PA	MOD
Meter Reading	16	27	22	9	20	27	14

Crystal Type FMT-5

$f_c = \frac{f_c}{32}$

MOTOROLA TRANSMITTERS PA-8021, SCHEMATIC DIAGRAM 30-50MC TRANSMITTER

PART NO. 63E86989

ISSUE B

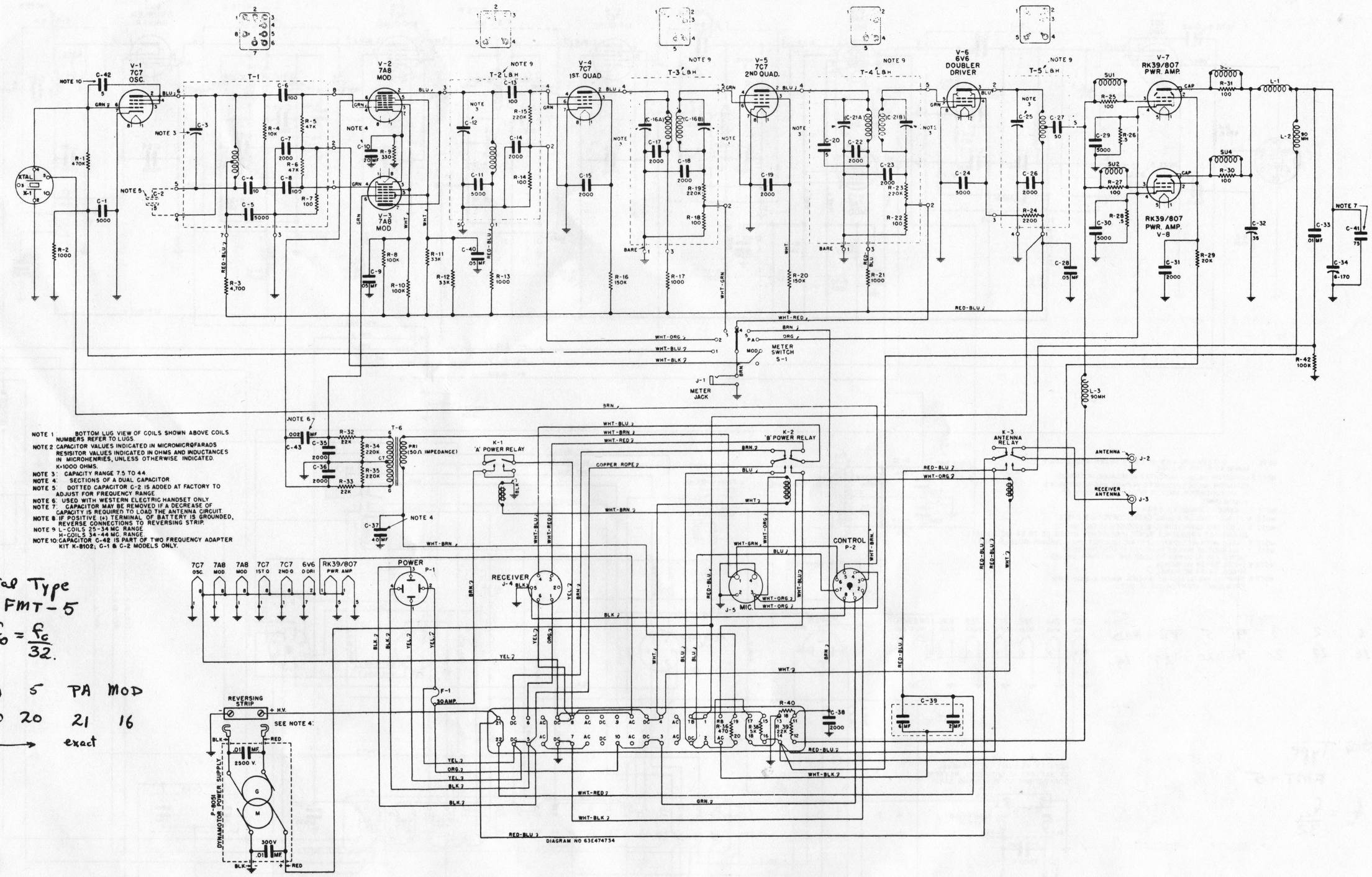

NOTE 1. BOTTOM LUG VIEW OF COILS SHOWN ABOVE COILS. NUMBERS REFER TO LUGS.
NOTE 2. CAPACITOR VALUES INDICATED IN MICROMICROFARADS. RESISTOR VALUES INDICATED IN OHMS AND INDUCTANCES IN MICROHENRIES, UNLESS OTHERWISE INDICATED. K=1000 OHMS.
NOTE 3. CAPACITY RANGE 7.5 TO 44
NOTE 4. SECTIONS OF A DUAL CAPACITOR
NOTE 5. DOTTED CAPACITOR C-2 IS ADDED AT FACTORY TO ADJUST FOR FREQUENCY RANGE.
NOTE 6. USED WITH WESTERN ELECTRIC HANDSET ONLY
NOTE 7. CAPACITOR MAY BE REMOVED IF A DECREASE OF CAPACITY IS REQUIRED TO LOAD THE ANTENNA CIRCUIT.
NOTE 8. IF POSITIVE (+) TERMINAL OF BATTERY IS GROUNDED, REVERSE CONNECTIONS TO REVERSING STRIP.
NOTE 9. L-COILS 25-34 MC RANGE. H-COILS 34-44 MC RANGE.
NOTE 10. CAPACITOR C-42 IS PART OF TWO FREQUENCY ADAPTER KIT K-8102; C-1 & C-2 MODELS ONLY.

Crystal Type FMT-5

$f_b = \frac{f_c}{32}$.

Meter Position	1	2	3	4	5	PA	MOD
Meter Reading	16	29	25	10	20	21	16
	← min →					exact	

MOTOROLA TRANSMITTER PA-8029, PA-8029-C AND WE-8029, SCHEMATIC DIAGRAM 30-50MC TRANSMITTER

PART NO. 63E474734
ISSUE. O

$f_o = \frac{f_c}{16}$

TYPE FMT-1

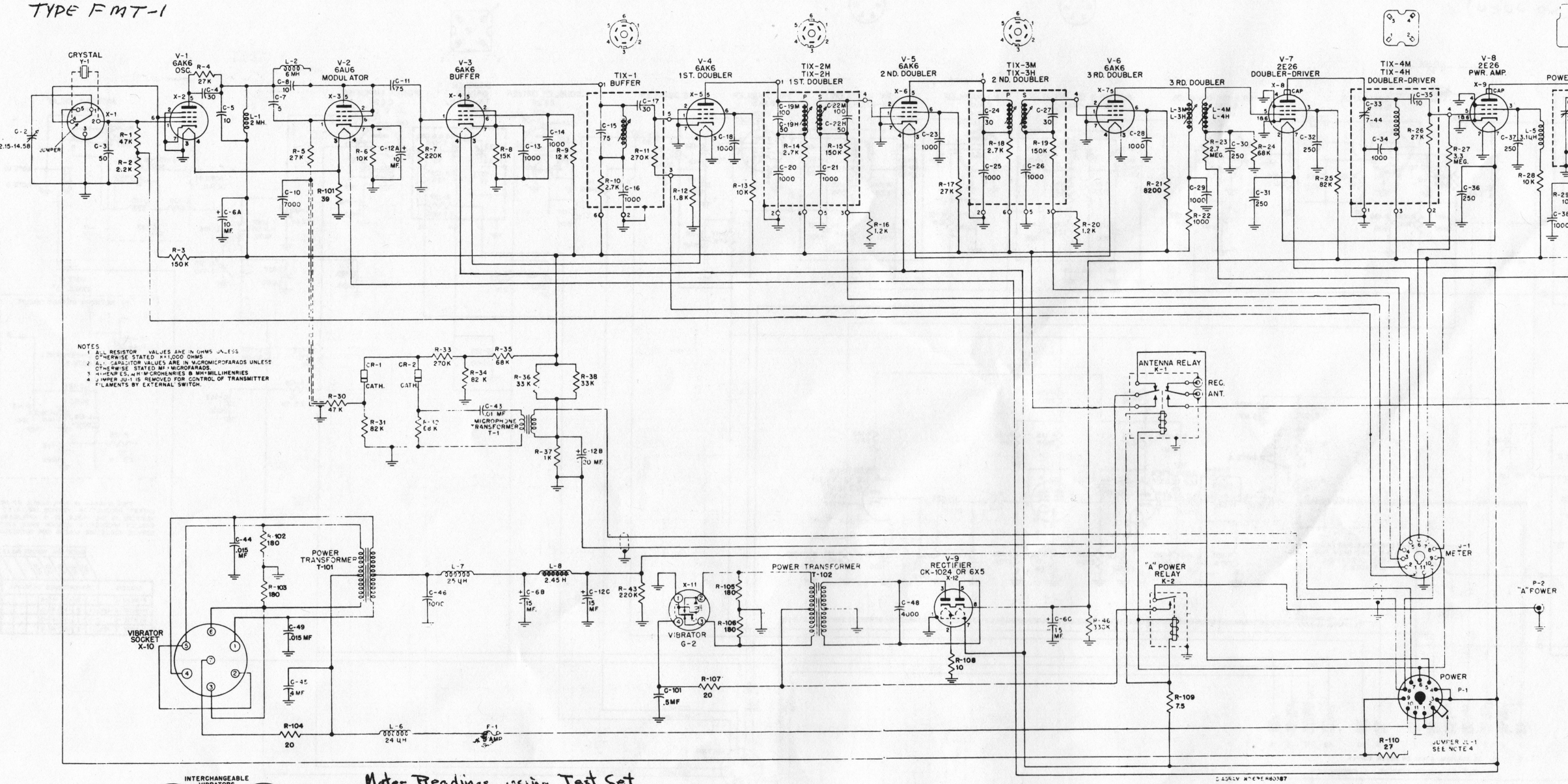

Meter Readings using Test Set

Meter Position:	1	2	3	4	5	6	7	8
Meter Reading:	15	6	10	6	15	15	20	25±5

← minimum → exact

MOTOROLA P-8620-A, 25-50 MEGACYCLE *DISPATCHER* TRANSMITTER (12V), SCHEMATIC DIAGRAM

PART NO. 63E880387
ISSUE -A 11/25/49

L-1
CRYSTAL TYPE
D10 (OVEN)
B10 (NO OVEN)

$f_o = \frac{f_c}{16}$

MOTOROLA SCHEMATIC DIAGRAM
25-50 MC. *UNI-CHANNEL* TRANSMITTER

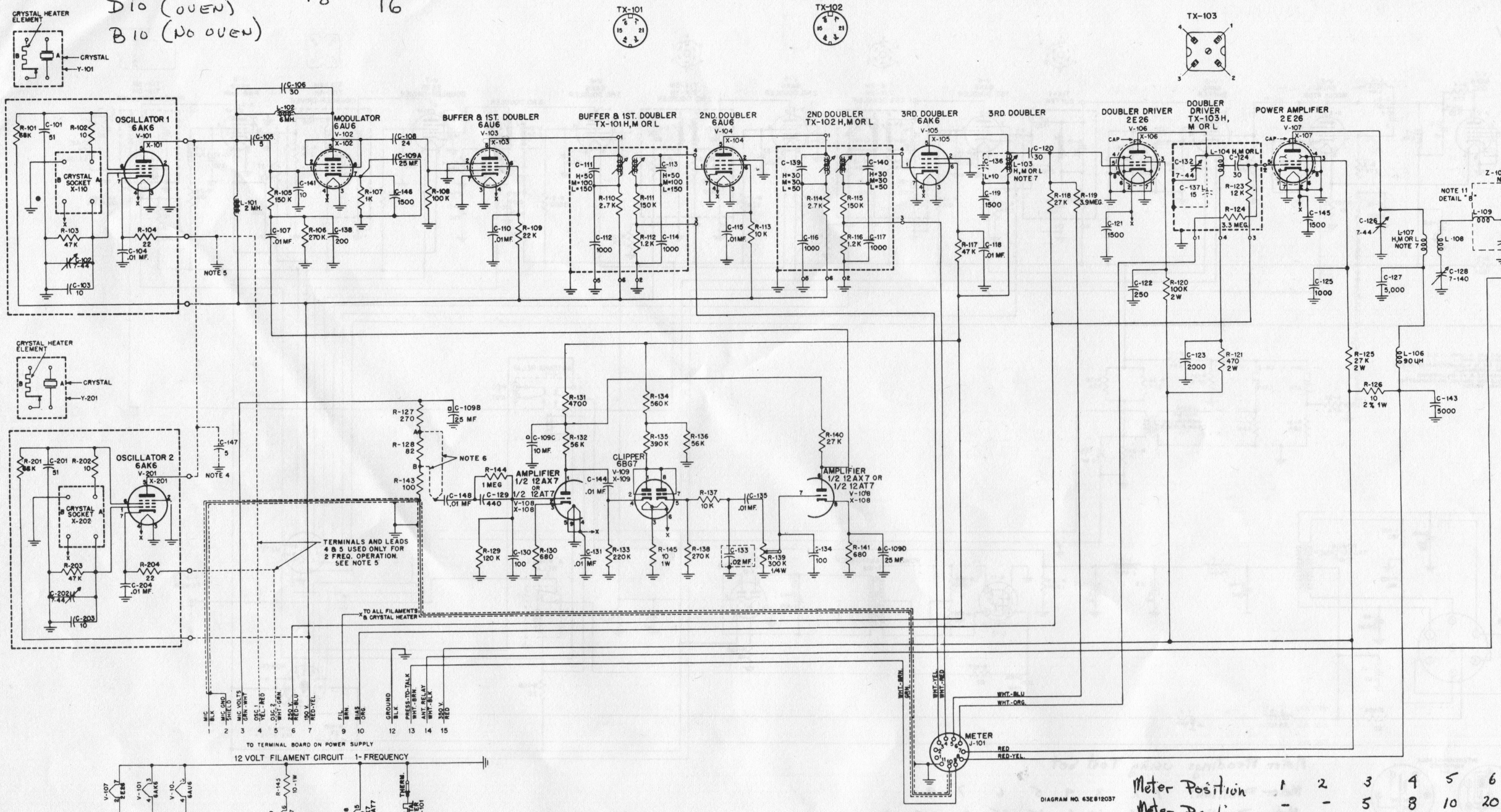

NOTES.
1. ALL RESISTOR VALUES ARE IN OHMS ±10% AND ARE 1/2 OR 1/3 WATT UNLESS OTHERWISE STATED. K=1000 OHMS.
2. ALL CAPACITOR VALUES ARE IN MICROMICROFARADS UNLESS OTHERWISE STATED. MF=MICROFARADS.
3. INDUCTANCE VALUES - MH = MILLIHENRIES & uH = MICROHENRIES.
4. CAPACITOR C-147 IS USED WITH SINGLE FREQUENCY TRANSMITTER ONLY.
5. GROUND CONNECTION IS USED WITH SINGLE FREQUENCY TRANSMITTER. GROUND MUST BE REMOVED WHEN SECOND FREQUENCY IS USED.
6. CONNECT TO POINT 'A' WHEN USING MILITARY TYPE CARBON MICROPHONE OR TO POINT 'B' WHEN USING WESTERN ELECTRIC HANDSET.
7. REFER TO SCHEMATIC PARTS LIST.
8. COMPONENTS WITH SUFFIX H ARE USED FOR 40 TO 50 MC. OPERATION. COMPONENTS WITH SUFFIX M ARE USED FOR 30 TO 40 MC. OPERATION. COMPONENTS WITH SUFFIX L ARE USED FOR 25 TO 30 MC. OPERATION.
9. GROUND FOR 6 VOLT OPERATION ONLY.
10. TO 12 VOLT SUPPLY FOR 12 VOLT OPERATION ONLY.
11. OUTPUT IS COUPLED TO ANTENNA USING P.I NETWORK WITHOUT HARMONIC FILTER IN ALL UNITS SUFFIXED "-1" "-2" AS SHOWN IN DETAIL "B".

THIS DIAGRAM IS APPLICABLE *AS DRAWN* TO THE LATEST PRODUCTION VERSION INDICATED BY SUFFIX NUMBERS IN THE TABLE. IT IS APPLICABLE TO EACH EARLIER PRODUCTION VERSION WHEN AMENDED BY *ALL* SERVICE BULLETINS LISTED FOR SUCCEEDING VERSIONS.

CHASSIS	DISCONTINUED VERSIONS								LATEST VERSION
	MODIFYING SERVICE BULLETIN NUMBERS								
P-9030-C	-1	-2	-3	-4	-5				-6
P-9030-C-12V	-1	-2	-3	-4	-5				-6
P-9050-C	-1	-2	-3	-4	-5				-6
P-9050-C-12V	-1	-2	-3	-4	-5				-6

DIAGRAM NO. 63E812037

MODEL DESCRIPTION, UNI-CHANNEL TRANSMITTER

MODEL	CHANNELS	PRIMARY POWER SOURCE
P-9030C	1 FREQ	6 V DC OR 117 V AC
P-9030C-12V	1 FREQ	12 V DC
P-9050C	2 FREQ	6 V DC OR 117 V AC
P-9050C-12V	2 FREQ	12 V DC

Meter Position 1 2 3 4 5 6 7 8 PA.
Meter Reading - - 5 8 10 20 17 - 40
← nominal → Max

PART NO. 63E812037
ISSUE 0 5/52-RS

L-5

$f_O = \frac{f_C}{16}$

CRYSTAL TYPE
D04 (OVEN)
B04 (NO OVEN)

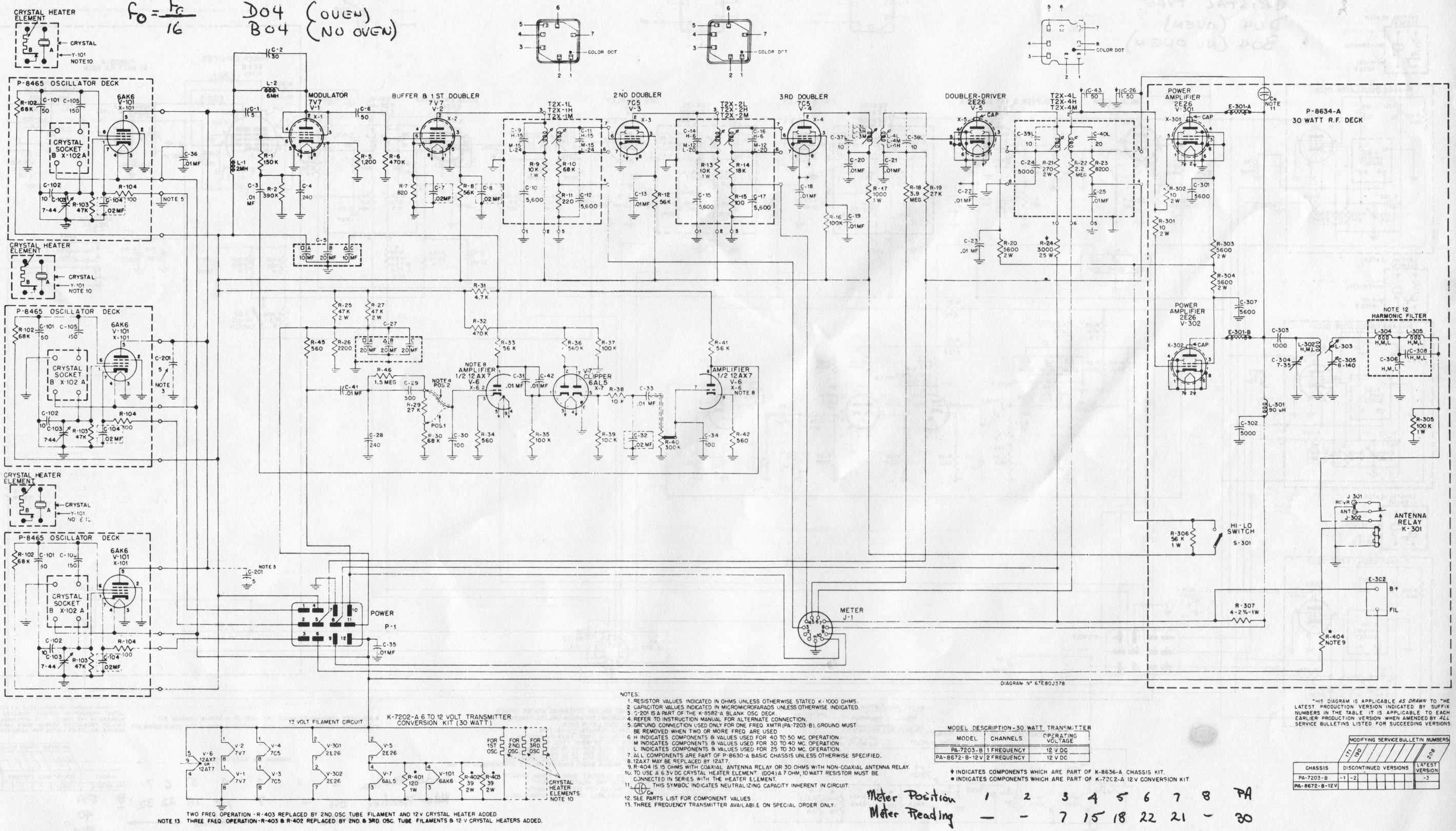

DIAGRAM N° 63E802378

NOTES:
1. RESISTOR VALUES INDICATED IN OHMS UNLESS OTHERWISE STATED K=1000 OHMS.
2. CAPACITOR VALUES INDICATED IN MICROMICROFARADS UNLESS OTHERWISE INDICATED.
3. C-201 IS A PART OF THE K-8582-A BLANK OSC. DECK.
4. REFER TO INSTRUCTION MANUAL FOR ALTERNATE CONNECTION.
5. GROUND CONNECTION USED ONLY FOR ONE FREQ. XMTR (PA-7203-B). GROUND MUST BE REMOVED WHEN TWO OR MORE FREQ. ARE USED.
6. H INDICATES COMPONENTS & VALUES USED FOR 40 TO 50 MC. OPERATION.
   M INDICATES COMPONENTS & VALUES USED FOR 30 TO 40 MC. OPERATION.
   L INDICATES COMPONENTS & VALUES USED FOR 25 TO 30 MC. OPERATION.
7. ALL COMPONENTS ARE PART OF P-8630-A BASIC CHASSIS UNLESS OTHERWISE SPECIFIED.
8. 12AX7 MAY BE REPLACED BY 12AT7.
9. R-404 IS 15 OHMS WITH COAXIAL ANTENNA RELAY OR 30 OHMS WITH NON-COAXIAL ANTENNA RELAY.
10. TO USE A 6.3 V DC CRYSTAL HEATER ELEMENT (D04) A 7 OHM, 10 WATT RESISTOR MUST BE CONNECTED IN SERIES WITH THE HEATER ELEMENT.
11. ⏚ CN THIS SYMBOL INDICATES NEUTRALIZING CAPACITY INHERENT IN CIRCUIT.
12. SEE PARTS LIST FOR COMPONENT VALUES.
13. THREE FREQUENCY TRANSMITTER AVAILABLE ON SPECIAL ORDER ONLY.

MODEL DESCRIPTION - 30 WATT TRANSMITTER

MODEL	CHANNELS	OPERATING VOLTAGE
PA-7203-B	1 FREQUENCY	12 V DC
PA-8672-B-12V	2 FREQUENCY	12 V DC

♦ INDICATES COMPONENTS WHICH ARE PART OF K-8636-A CHASSIS KIT.
● INDICATES COMPONENTS WHICH ARE PART OF K-7202-A 12V CONVERSION KIT.

Meter Position 1 2 3 4 5 6 7 8 PA
Meter Reading — — 7 15 18 22 21 — 30

"THIS DIAGRAM IS APPLICABLE AS DRAWN TO THE LATEST PRODUCTION VERSION INDICATED BY SUFFIX NUMBERS IN THE TABLE. IT IS APPLICABLE TO EACH EARLIER PRODUCTION VERSION WHEN AMENDED BY ALL SERVICE BULLETINS LISTED FOR SUCCEEDING VERSIONS.

CHASSIS	DISCONTINUED VERSIONS	MODIFYING SERVICE BULLETIN NUMBERS 1	2	3	LATEST VERSION
PA-7203-B	-1 -2				-3
PA-8672-B-12V					

MOTOROLA SCHEMATIC DIAGRAM
25-50 MC. 30 WATT TRANSMITTER CHASSIS, 12 VDC

PART NO. 63E802378
ISSUE-D 12/51-RS

L-5

$f_o = \frac{f_e}{16}$

CRYSTAL TYPE
D04 (OVEN)
B04 (NO OVEN)

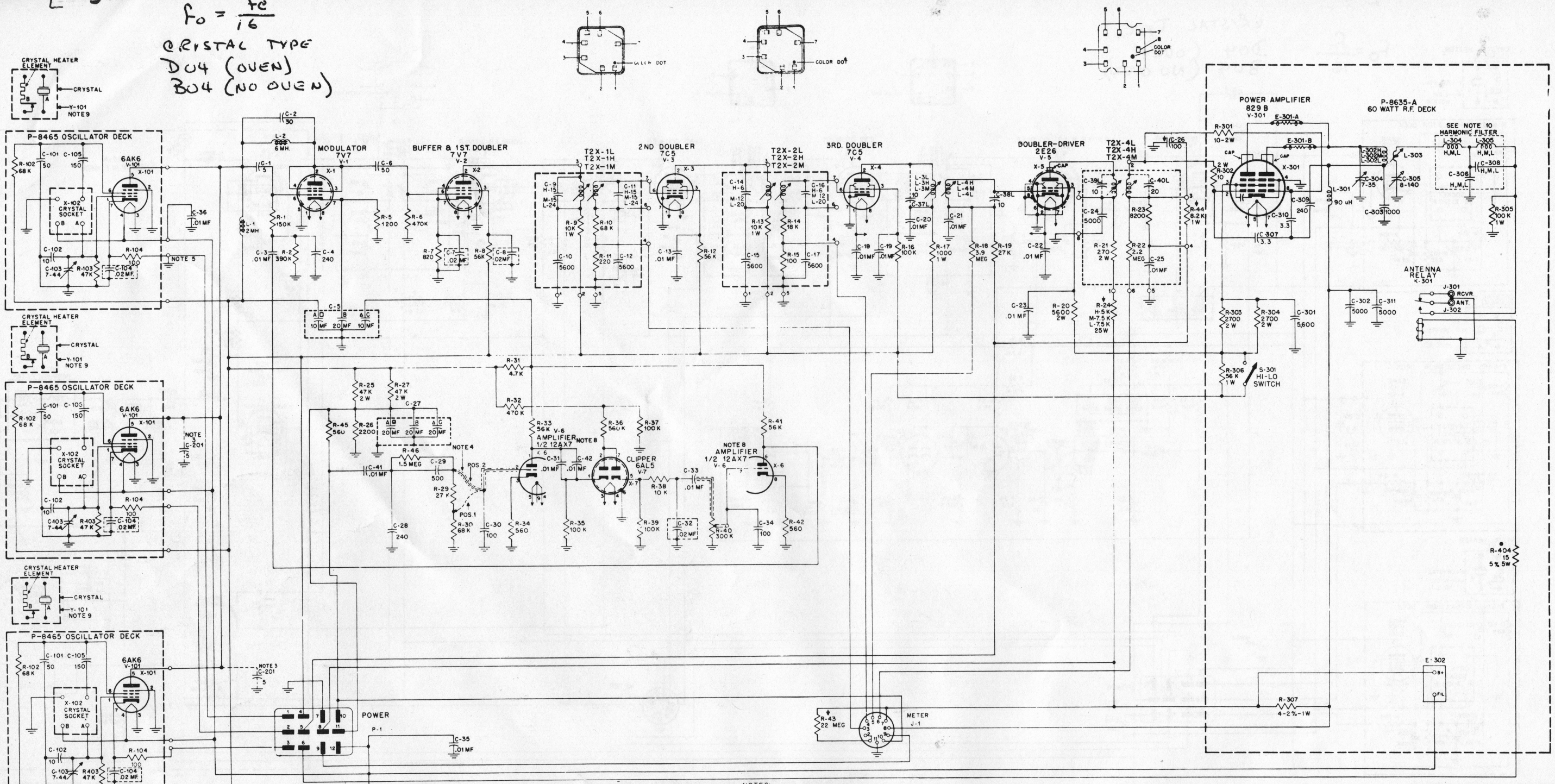

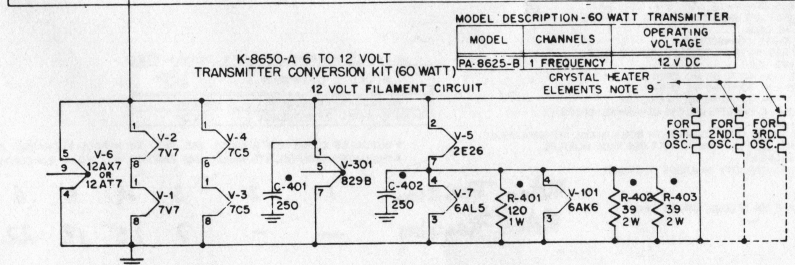

MODEL DESCRIPTION - 60 WATT TRANSMITTER

MODEL	CHANNELS	OPERATING VOLTAGE
PA-8625-B	1 FREQUENCY	12 V DC

TWO FREQ. OPERATION—R-403 REPLACED BY 2ND. OSC. TUBE FILAMENT AND 12 V. CRYSTAL HEATER ADDED
NOTE 11-THREE FREQ. OPERATION-R-403 & R-402 REPLACED BY 2ND & 3RD OSC. TUBE FILAMENTS & 12 V. CRYSTAL HEATER ADDFD.

NOTES:
1. RESISTOR VALUES INDICATED IN OHMS UNLESS OTHERWISE STATED. K=1000
2. CAPACITOR VALUES INDICATED IN MICROMICROFARADS UNLESS OTHERWISE STATED.
3. C-201 IS PART OF K-8582-A BLANK OSCILLATOR DECK.
4. REFER TO INSTRUCTION MANUAL FOR ALTERNATE CONNECTION.
5. GROUND CONNECTION USED ONLY FOR ONE FREQ. XMTR (PA-8625-B) GROUND MUST BE REMOVED WHEN TWO OR MORE FREQ. ARE USED.
6. H INDICATES COMPONENTS & VALUES USED FOR 40 TO 50 MC. OPERATION. M INDICATES COMPONENTS & VALUES USED FOR 30 TO 40 MC. OPERATION. L INDICATES COMPONENTS & VALUES USED FOR 25 TO 30 MC. OPERATION.
7. ALL COMPONENTS ARE PART OF P-8630-A BASIC CHASSIS UNLESS OTHERWISE SPECIFIED.
8. 12AX7 MAY BE REPLACED BY 12AT7.
9. TO USE A 6.3 V.DC CRYSTAL HEATER ELEMENT (D04) A 7 OHM, 10 WATT RESISTOR MUST BE INSTALLED IN SERIES WITH THE HEATER ELEMENT.
10. SEE PARTS LIST FOR COMPONENT VALUES FOR DIFFERENT BANDS.
11. THREE FREQUENCY TRANSMITTER AVAILABLE ON SPECIAL ORDER ONLY

♦ INDICATES COMPONENTS WHICH ARE PART OF K-8637-A CHASSIS KIT.
● INDICATES COMPONENTS WHICH ARE PART OF K-8650-A 12 V CONVERSION KIT.

THIS DIAGRAM IS APPLICABLE *AS DRAWN* TO THE LATEST PRODUCTION VERSION INDICATED BY SUFFIX NUMBERS IN THE TABLE. IT IS APPLICABLE TO EACH EARLIER PRODUCTION VERSION WHEN AMENDED BY *ALL* SERVICE BULLETINS LISTED FOR SUCCEEDING VERSIONS.

DIAGRAM NO. 63E802379

	MODIFYING SERVICE BULLETIN NUMBERS		
	191	200	208
CHASSIS	DISCONTINUED VERSIONS		LATEST VERSION
PA-8625-B	-1	-2	-3

Switch Position	1	2	3	4	5	6	7	8	PA
Meter Reading	off	-	7	15	18	22	32	-	40
	Scale	←	nominal				→		max

MOTOROLA SCHEMATIC DIAGRAM

25-50 MC. 60 WATT TRANSMITTER CHASSIS, 12 VDC

PART NO. 63E802379
ISSUE-F 12/51-RS

MOTOROLA SCHEMATIC DIAGRAM
TA104 SERIES, 25-54 MC. TRANSMITTERS

TU113 OR TU113-C2 BASIC CHASSIS NOTE 10

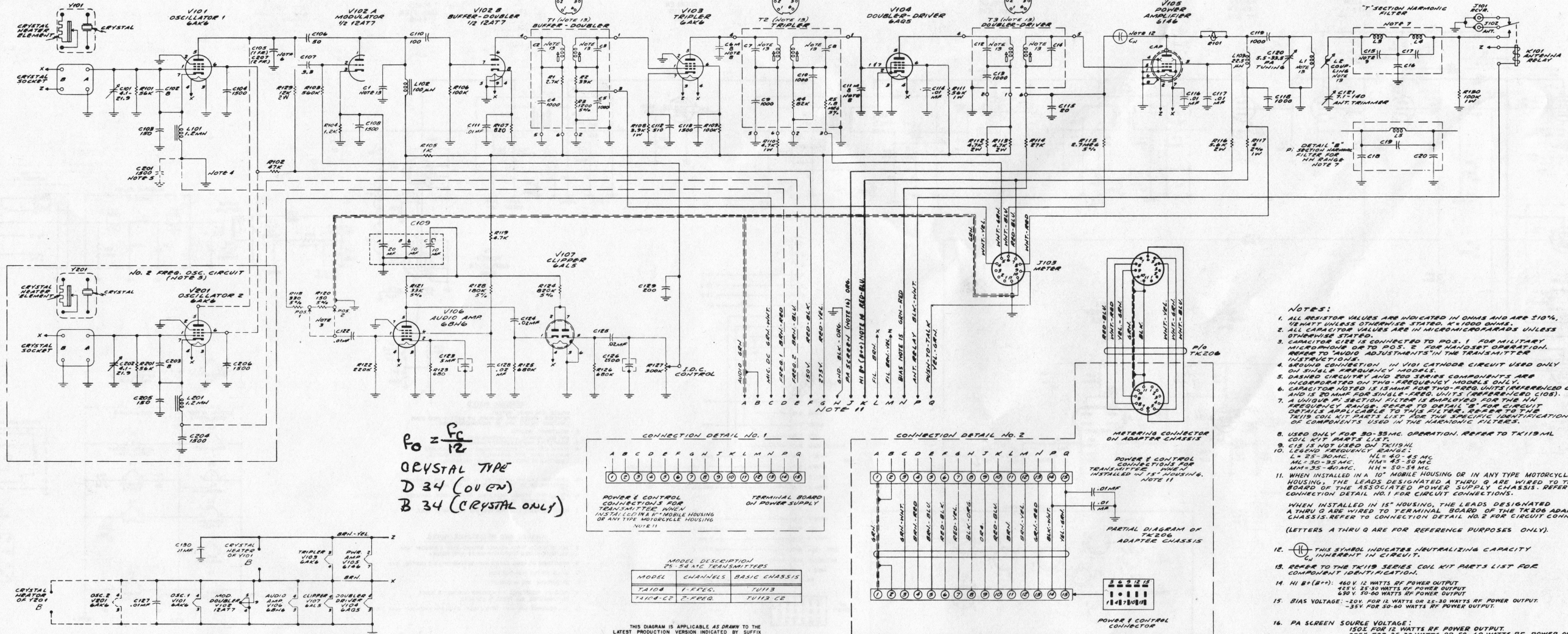

$f_o = \frac{f_c}{12}$

CRYSTAL TYPE
D 34 (OVEN)
B 34 (CRYSTAL ONLY)

MODEL DESCRIPTION
25-54 MC TRANSMITTERS

MODEL	CHANNELS	BASIC CHASSIS
TA104	1-FREQ.	TU113
TA104-C2	2-FREQ.	TU113-C2

THIS DIAGRAM IS APPLICABLE AS DRAWN TO THE LATEST PRODUCTION VERSION INDICATED BY SUFFIX NUMBERS IN THE TABLE. IT IS APPLICABLE TO EACH EARLIER PRODUCTION VERSION WHEN AMENDED BY ALL SERVICE BULLETINS LISTED FOR SUCCEEDING VERSIONS.

	MODIFYING SERVICE BULLETIN NUMBERS								
									373
CHASSIS	DISCONTINUED VERSIONS								LATEST VERSION
TA104	X	-1	-2	-3	-4				-5
TA104-C2	X	-1	-2	-3	-4				-5

X EFFECTIVE BEGINNING OF PRODUCTION

Meter Position 1 2 3 -4 5 6 7 8 PA.
Meter Reading. - - - 5 18 16 26 - 27±
nominal

NOTES:

1. ALL RESISTOR VALUES ARE INDICATED IN OHMS AND ARE ±10%, ½ WATT UNLESS OTHERWISE STATED. K = 1000 OHMS.
2. ALL CAPACITOR VALUES ARE IN MICROMICROFARADS UNLESS OTHERWISE STATED.
3. CAPACITOR C128 IS CONNECTED TO POS. 1 FOR MILITARY MICROPHONE OR TO POS. 2 FOR HANDSET OPERATION. REFER TO "AUDIO ADJUSTMENTS" IN THE TRANSMITTER INSTRUCTIONS.
4. ARDUINO CONNECTION IN V101 CATHODE CIRCUIT USED ONLY ON SINGLE-FREQUENCY MODELS.
5. DASHED CIRCUITRY AND 200 SERIES COMPONENTS ARE INCORPORATED ON TWO-FREQUENCY MODELS ONLY.
6. CAPACITOR NOTED IS 15 MMF FOR TWO-FREQ. UNITS (REFERENCED C201) AND IS 20 MMF FOR SINGLE-FREQ. UNITS (REFERENCED C108).
7. A UNIQUE PI SECTION FILTER IS EMPLOYED FOR THE HH FREQUENCY RANGE. REFER TO DETAIL "B" FOR CIRCUIT DETAILS APPLICABLE TO THIS FILTER. REFER TO THE TU113 COIL KIT PARTS LIST FOR THE SPECIFIC IDENTIFICATION OF COMPONENTS USED IN THE HARMONIC FILTERS.
8. USED ONLY FOR 30-33 MC. OPERATION. REFER TO TK113 ML COIL KIT PARTS LIST.
9. C18 IS NOT USED ON TK113-ML
10. LEGEND FREQUENCY RANGE:
    L = 25-30 MC. NL = 40-45 MC
    ML = 30-35 MC. NM = 45-50 MC
    M = 35-40 MC. HH = 50-54 MC
11. WHEN INSTALLED IN A 10" MOBILE HOUSING OR IN ANY TYPE MOTORCYCLE HOUSING, THE LEADS DESIGNATED A THRU Q ARE WIRED TO TERMINAL BOARD OF THE ASSOCIATED POWER SUPPLY CHASSIS - REFER TO CONNECTION DETAIL NO. 1 FOR CIRCUIT CONNECTIONS.

    WHEN INSTALLED IN 15" HOUSING, THE LEADS DESIGNATED A THRU Q ARE WIRED TO TERMINAL BOARD OF THE TE206 ADAPTER CHASSIS. REFER TO CONNECTION DETAIL NO. 2 FOR CIRCUIT CONNECTIONS.

    (LETTERS A THRU Q ARE FOR REFERENCE PURPOSES ONLY).
12. C_N THIS SYMBOL INDICATES NEUTRALIZING CAPACITY INHERENT IN CIRCUIT.
13. REFER TO THE TK113 SERIES COIL KIT PARTS LIST FOR COMPONENT IDENTIFICATION.
14. HI B+ (B++): 460 V. 12 WATTS RF POWER OUTPUT.
    425 V. 25-30 WATTS RF POWER OUTPUT.
    430 V. 50-60 WATTS RF POWER OUTPUT.
15. BIAS VOLTAGE: -20 V. FOR 12 WATTS OR 25-30 WATTS RF POWER OUTPUT.
    -35 V FOR 50-60 WATTS RF POWER OUTPUT.
16. PA SCREEN SOURCE VOLTAGE:
    150± FOR 12 WATTS RF POWER OUTPUT.
    275± FOR 25-30 WATTS OR 50-60 WATTS RF POWER OUTPUT.

PART NO. 63E836043
ISSUE - A 6/54-RS

TA202A-T TRANSMITTER
SCHEMATIC DIAGRAM

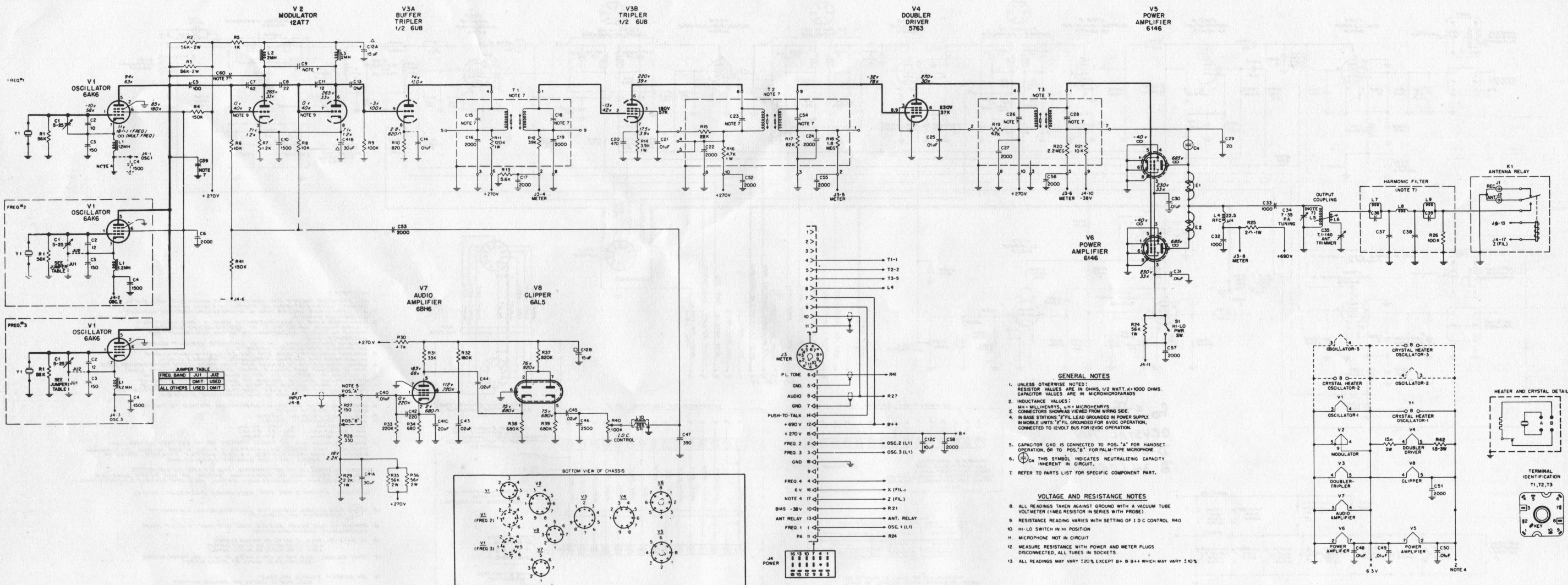

GENERAL NOTES

1. UNLESS OTHERWISE NOTED: RESISTOR VALUES ARE IN OHMS, 1/2 WATT. K=1000 OHMS CAPACITOR VALUES ARE IN MICROMICROFARADS
2. INDUCTANCE VALUES: MH = MILLIHENRYS, UH = MICROHENRYS
3. CONNECTORS SHOWN AS VIEWED FROM WIRING SIDE.
4. IN BASE STATIONS "B" FIL. LEAD GROUNDED IN POWER SUPPLY. IN MOBILE UNITS "B" FIL. GROUNDED FOR 6VDC OPERATION, CONNECTED TO 12VOLT BUS FOR 12VDC OPERATION.
5. CAPACITOR C40 IS CONNECTED TO POS. "A" FOR HANDSET OPERATION, OR TO POS. "B" FOR PALM-TYPE MICROPHONE
6. ⊕CH THIS SYMBOL INDICATES NEUTRALIZING CAPACITY INHERENT IN CIRCUIT.
7. REFER TO PARTS LIST FOR SPECIFIC COMPONENT PART.

VOLTAGE AND RESISTANCE NOTES

8. ALL READINGS TAKEN AGAINST GROUND WITH A VACUUM TUBE VOLTMETER (1 MEG RESISTOR IN SERIES WITH PROBE)
9. RESISTANCE READING VARIES WITH SETTING OF 1 D C CONTROL R40
10. HI-LO SWITCH IN HI POSITION
11. MICROPHONE NOT IN CIRCUIT
12. MEASURE RESISTANCE WITH POWER AND METER PLUGS DISCONNECTED, ALL TUBES IN SOCKETS.
13. ALL READINGS MAY VARY ±20% EXCEPT B+ & B++ WHICH MAY VARY ±10%

MOTOROLA
PART NO. 63E852827
ISSUE - E 7/57-UM

TA202A-TP TRANSMITTER
SCHEMATIC DIAGRAM

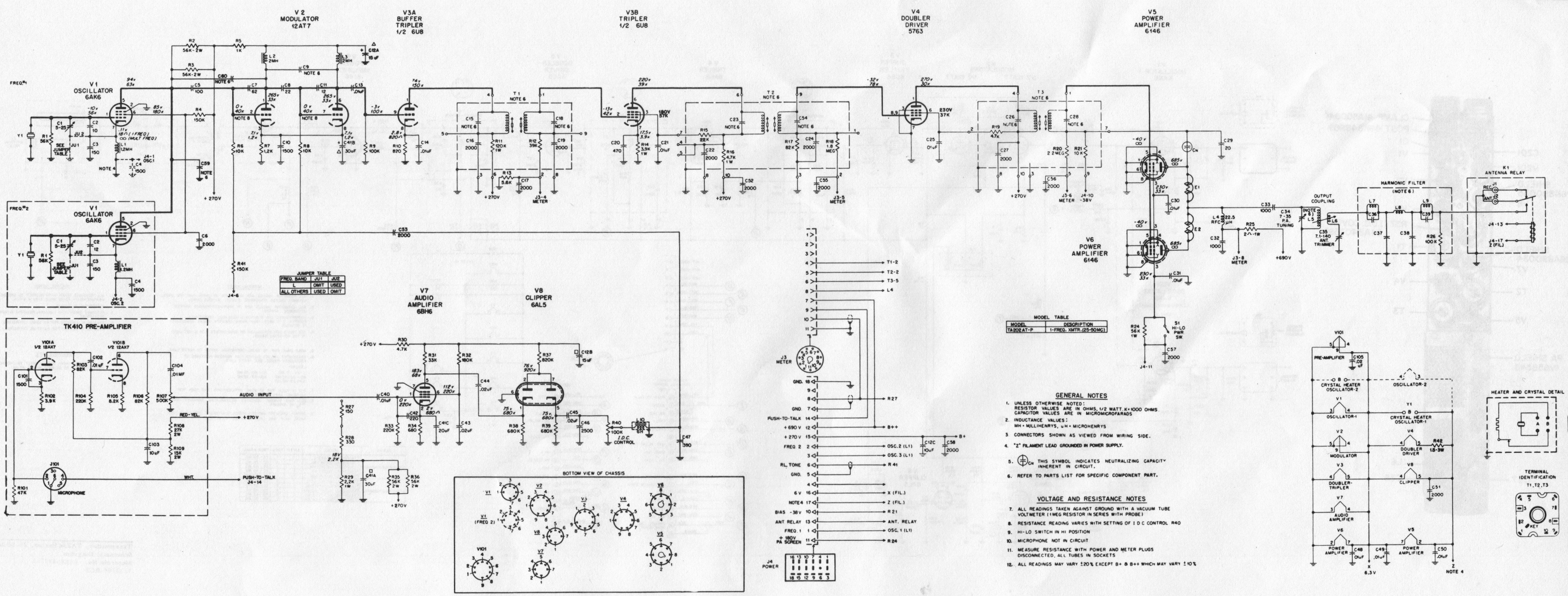

GENERAL NOTES

1. UNLESS OTHERWISE NOTED: RESISTOR VALUES ARE IN OHMS, 1/2 WATT. K=1000 OHMS CAPACITOR VALUES ARE IN MICROMICROFARADS
2. INDUCTANCE VALUES: MH = MILLIHENRYS, UH = MICROHENRYS
3. CONNECTORS SHOWN AS VIEWED FROM WIRING SIDE.
4. "Z" FILAMENT LEAD GROUNDED IN POWER SUPPLY.
5. ⊕ C_N THIS SYMBOL INDICATES NEUTRALIZING CAPACITY INHERENT IN CIRCUIT.
6. REFER TO PARTS LIST FOR SPECIFIC COMPONENT PART.

VOLTAGE AND RESISTANCE NOTES

7. ALL READINGS TAKEN AGAINST GROUND WITH A VACUUM TUBE VOLTMETER (1 MEG RESISTOR IN SERIES WITH PROBE)
8. RESISTANCE READING VARIES WITH SETTING OF I.D.C. CONTROL R40
9. HI-LO SWITCH IN HI POSITION
10. MICROPHONE NOT IN CIRCUIT
11. MEASURE RESISTANCE WITH POWER AND METER PLUGS DISCONNECTED, ALL TUBES IN SOCKETS
12. ALL READINGS MAY VARY ±20% EXCEPT B+ & B++ WHICH MAY VARY ±10%

MOTOROLA
PART NO. 63E852828
ISSUE - O 7/57-UM

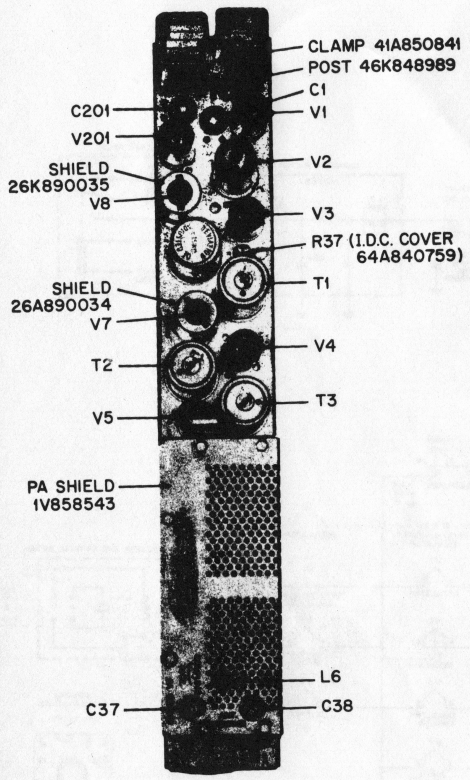

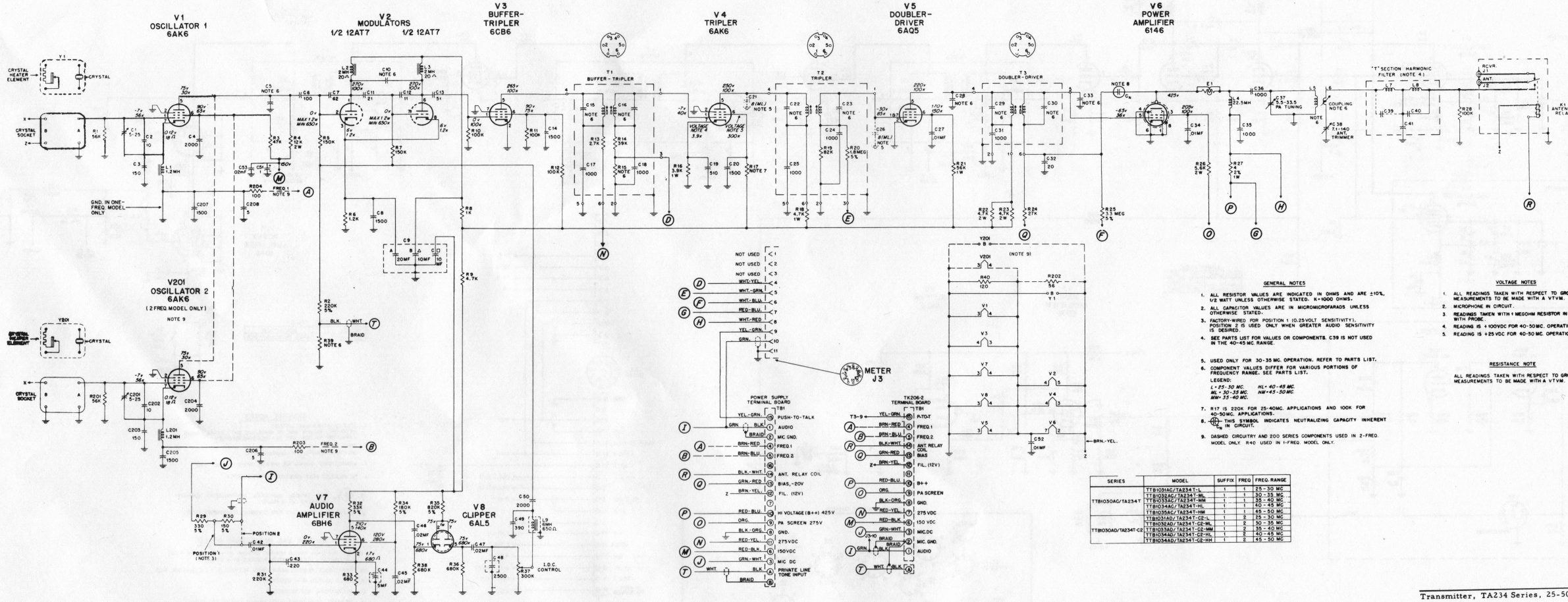

GENERAL NOTES

1. ALL RESISTOR VALUES ARE INDICATED IN OHMS AND ARE ±10%, 1/2 WATT UNLESS OTHERWISE STATED. K=1000 OHMS.
2. ALL CAPACITOR VALUES ARE IN MICROMICROFARADS UNLESS OTHERWISE STATED.
3. FACTORY-WIRED FOR POSITION 1 (0.25-VOLT SENSITIVITY). POSITION 2 IS USED ONLY WHEN GREATER AUDIO SENSITIVITY IS DESIRED.
4. SEE PARTS LIST FOR VALUES OR COMPONENTS. C39 IS NOT USED IN THE 40-45 MC RANGE.
5. USED ONLY FOR 30-35 MC. OPERATION. REFER TO PARTS LIST.
6. COMPONENT VALUES DIFFER FOR VARIOUS PORTIONS OF FREQUENCY RANGE. SEE PARTS LIST.
   LEGEND:
   L=25-30 MC. HL=40-45 MC.
   ML=30-35 MC. HM=45-50 MC.
   MH=35-40 MC.
7. R17 IS 220K FOR 25-40MC. APPLICATIONS AND 100K FOR 40-50MC. APPLICATIONS.
8. ⊕ THIS SYMBOL INDICATES NEUTRALIZING CAPACITY INHERENT IN CIRCUIT.
9. DASHED CIRCUITRY AND 200 SERIES COMPONENTS USED IN 2-FREQ. MODEL ONLY. R40 USED IN 1-FREQ. MODEL ONLY.

VOLTAGE NOTES

1. ALL READINGS TAKEN WITH RESPECT TO GROUND MEASUREMENTS TO BE MADE WITH A VTVM.
2. MICROPHONE IN CIRCUIT.
3. READINGS TAKEN WITH 1 MEGOHM RESISTOR IN SERIES WITH PROBE.
4. READING IS +100VDC FOR 40-50 MC. OPERATION.
5. READING IS +25 VDC FOR 40-50 MC. OPERATION.

RESISTANCE NOTE

ALL READINGS TAKEN WITH RESPECT TO GROUND MEASUREMENTS TO BE MADE WITH A VTVM.

SERIES	MODEL	SUFFIX	FREQ	FREQ. RANGE
TTB1030AC/TA234T	TTB1034AC/TA234T-L	1	1	25 - 30 MC
	TTB1032AC/TA234T-ML	1	1	30 - 35 MC
	TTB1033AC/TA234T-MH	1	1	35 - 40 MC
	TTB1034AC/TA234T-HL	1	1	40 - 45 MC
	TTB1035AC/TA234T-HM	1	1	45 - 50 MC
TTB1030AD/TA234T-CR	TTB1031AD/TA234T-CE-L	1	2	25 - 30 MC
	TTB1032AD/TA234T-CE-ML	1	2	30 - 35 MC
	TTB1033AD/TA234T-CE-MH	1	2	35 - 40 MC
	TTB1034AD/TA234T-CE-HL	1	2	40 - 45 MC
	TTB1045AD/TA234T-CE-HH	1	2	45 - 50 MC

Transmitter, TA234 Series, 25-50 MC
Schematic Diagram
Motorola No. 63E854977-C
7/13/59-RCS

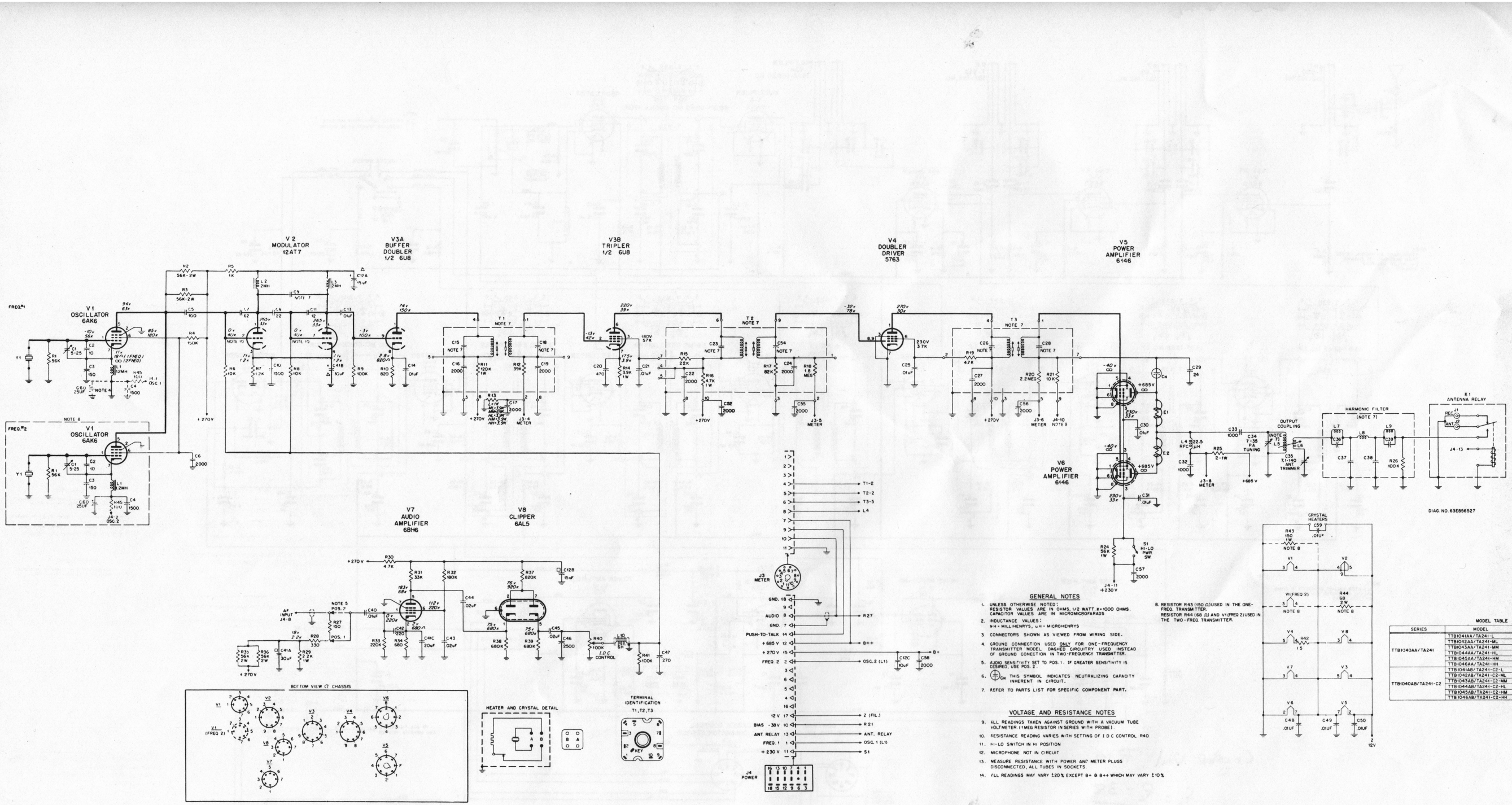

GENERAL NOTES

1. UNLESS OTHERWISE NOTED:
   RESISTOR VALUES ARE IN OHMS, 1/2 WATT. K=1000 OHMS.
   CAPACITOR VALUES ARE IN MICROMICROFARADS
2. INDUCTANCE VALUES:
   MH = MILLIHENRYS, uH = MICROHENRYS
3. CONNECTORS SHOWN AS VIEWED FROM WIRING SIDE.
4. GROUND CONNECTION USED ONLY FOR ONE-FREQUENCY TRANSMITTER MODEL. DASHED CIRCUITRY USED INSTEAD OF GROUND CONECTION IN TWO-FREQUENCY TRANSMITTER.
5. AUDIO SENSITIVITY SET TO POS 1. IF GREATER SENSITIVITY IS DESIRED, USE POS. 2.
6. ⊕ THIS SYMBOL INDICATES NEUTRALIZING CAPACITY INHERENT IN CIRCUIT.
7. REFER TO PARTS LIST FOR SPECIFIC COMPONENT PART.

VOLTAGE AND RESISTANCE NOTES

9. ALL READINGS TAKEN AGAINST GROUND WITH A VACUUM TUBE VOLTMETER (1 MEG RESISTOR IN SERIES WITH PROBE).
10. RESISTANCE READING VARIES WITH SETTING OF I.D.C. CONTROL R40.
11. HI-LO SWITCH IN HI POSITION
12. MICROPHONE NOT IN CIRCUIT
13. MEASURE RESISTANCE WITH POWER AND METER PLUGS DISCONNECTED, ALL TUBES IN SOCKETS.
14. ALL READINGS MAY VARY ±20% EXCEPT B+ & B++ WHICH MAY VARY ±10%

8. RESISTOR R43 (150 Ω) USED IN THE ONE-FREQ. TRANSMITTER.
   RESISTOR R44 (68 Ω) AND V1 (FREQ 2) USED IN THE TWO-FREQ. TRANSMITTER.

MODEL TABLE

SERIES	MODEL	FREQ	SUFFIX	FREQ. RANGE
TTBI040AA/TA241	TTBI041AA/TA241-L	1	1	25-30 MC
	TTBI042AA/TA241-ML	1	1	30-35 MC
	TTBI043AA/TA241-MH	1	1	35-40 MC
	TTBI044AA/TA241-HL	1	1	40-45 MC
	TTBI045AA/TA241-HH	1	1	45-50 MC
	TTBI046AA/TA241-HH	1	1	50-54 MC
TTBI040AB/TA241-C2	TTBI041AB/TA241-C2-L	2	1	25-30 MC
	TTBI042AB/TA241-C2-ML	2	1	30-35 MC
	TTBI043AB/TA241-C2-MH	2	1	35-40 MC
	TTBI044AB/TA241-C2-HL	2	1	40-45 MC
	TTBI045AB/TA241-C2-HH	2	1	45-50 MC
	TTBI046AB/TA241-C2-HH	2	1	50-54 MC

Transmitter, TA241 and TA241-C2
Schematic Diagram
Motorola No. 63E856527-D
11/16/59-RS

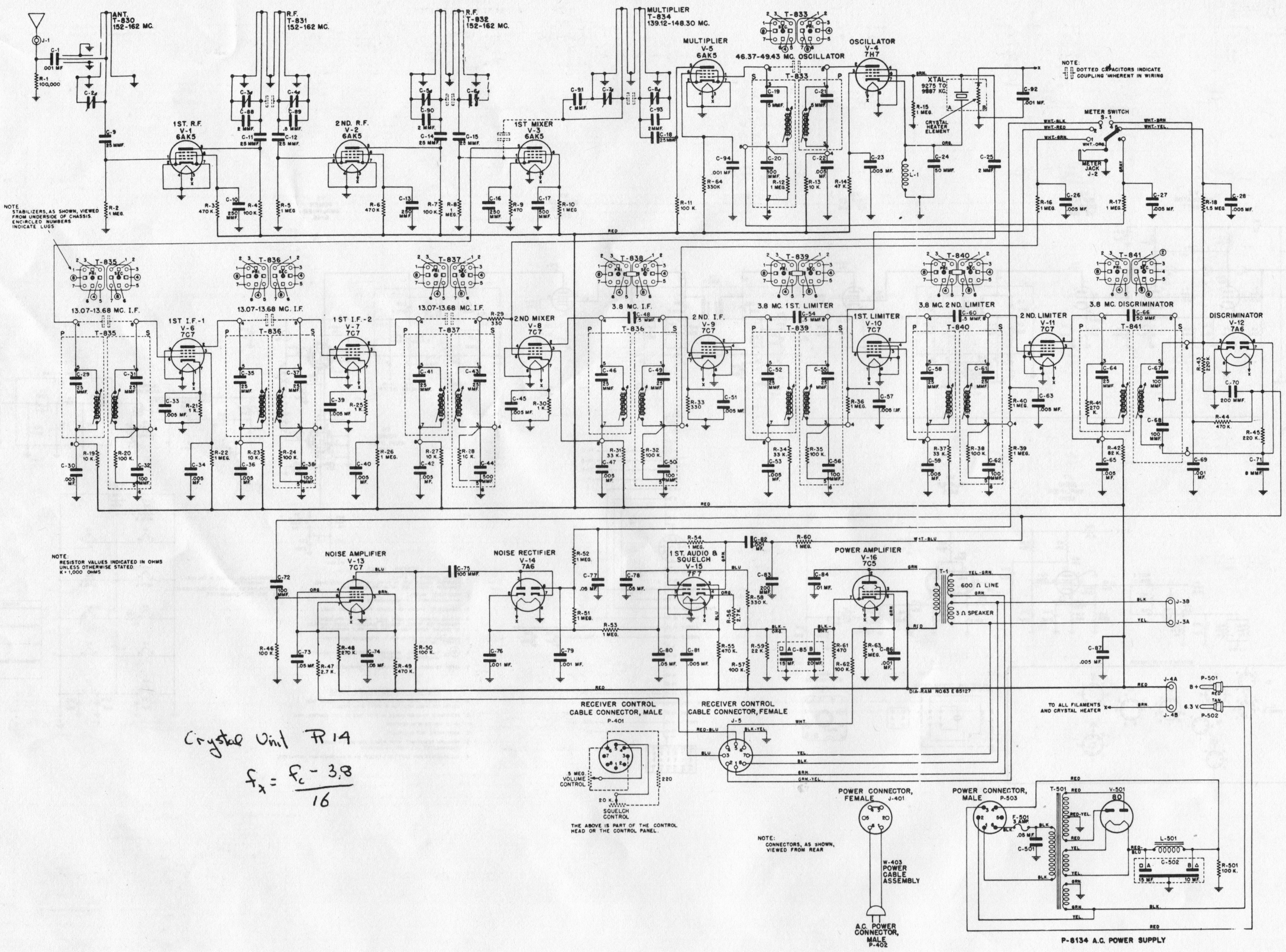

Crystal Unit FR14

$$f_x = \frac{f_c - 3.8}{16}$$

150-172MC RECEIVER

MODEL FSRU-16-B (PA-8335) SCHEMATIC DIAGRAM

PART NO. 63E85127
ISSUE B

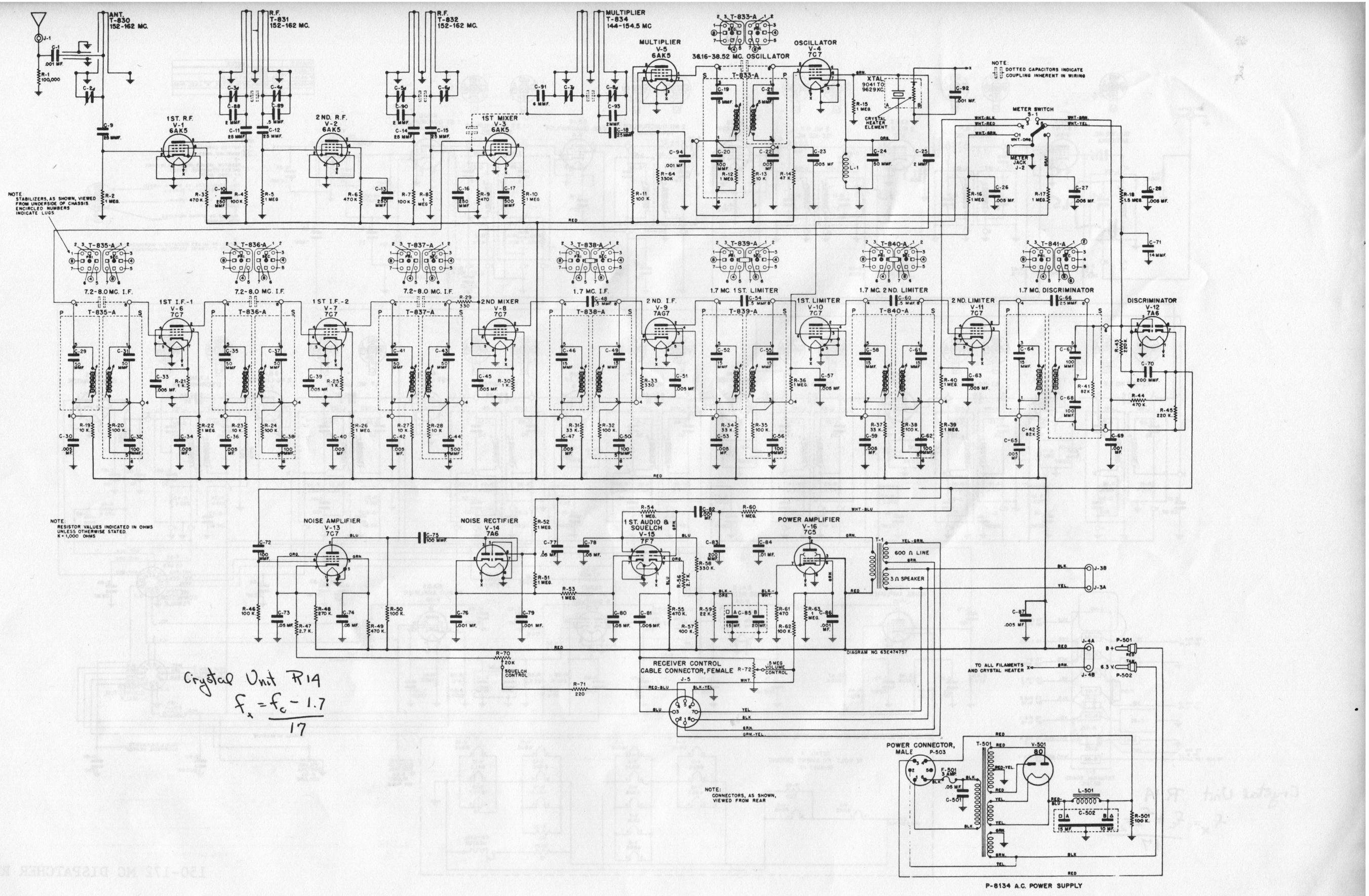

Crystal Unit R14

$f_x = \frac{f_c - 1.7}{17}$

MOTOROLA RECEIVER, PA-8364-A, SCHEMATIC DIAGRAM 150-172MC

PART NO. 63E474757
ISSUE 0

CHASSIS	NOTES
P-8528-C	AS SHOWN, LESS R-66
P-8528-E	AS SHOWN, WITH R-66
P-8528-H	AS SHOWN, WITH DETAIL "A" LESS R-66

NOTE 1:
DOTTED CAPACITORS INDICATE COUPLING INHERENT IN WIRING.
2
RESISTOR VALUES INDICATED IN OHMS UNLESS OTHERWISE STATED. K = 1,000 OHMS.
3
COIL STABILIZERS, AS SHOWN, VIEWED FROM UNDERSIDE OF CHASSIS.
4
NUMBERS INDICATE TERMINAL LUGS ON COILS
5
NUMBER ON SPRING INDICATES COIL NUMBER
7
CAPACITOR VALUES INDICATED IN MICROMICROFARADS UNLESS OTHERWISE STATED. MF = MICROFARADS.

E-1
TERMINAL BOARD DETAIL

DETAIL A
12 VOLT FILAMENT CIRCUIT
(P-8528-H)

Crystal Unit R 14

$$f_x = \frac{f_c + f_{IF_{2nd}}}{17}$$

150-172 MC DISPATCHER RECEIVER

PART NO. 63E800214
ISSUE-O 1/22/51-UM

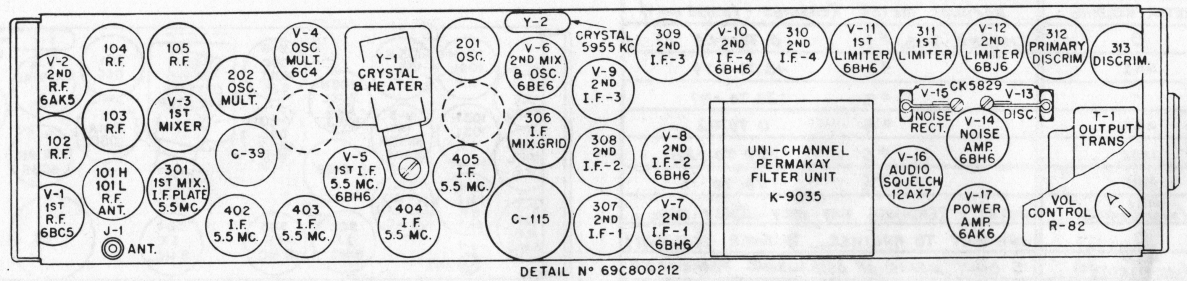

DETAIL N° 69C800212

MOTOROLA SCHEMATIC DIAGRAM
PA-9033 AND PA-9073
UNI-CHANNEL SENSIÇON RECEIVER

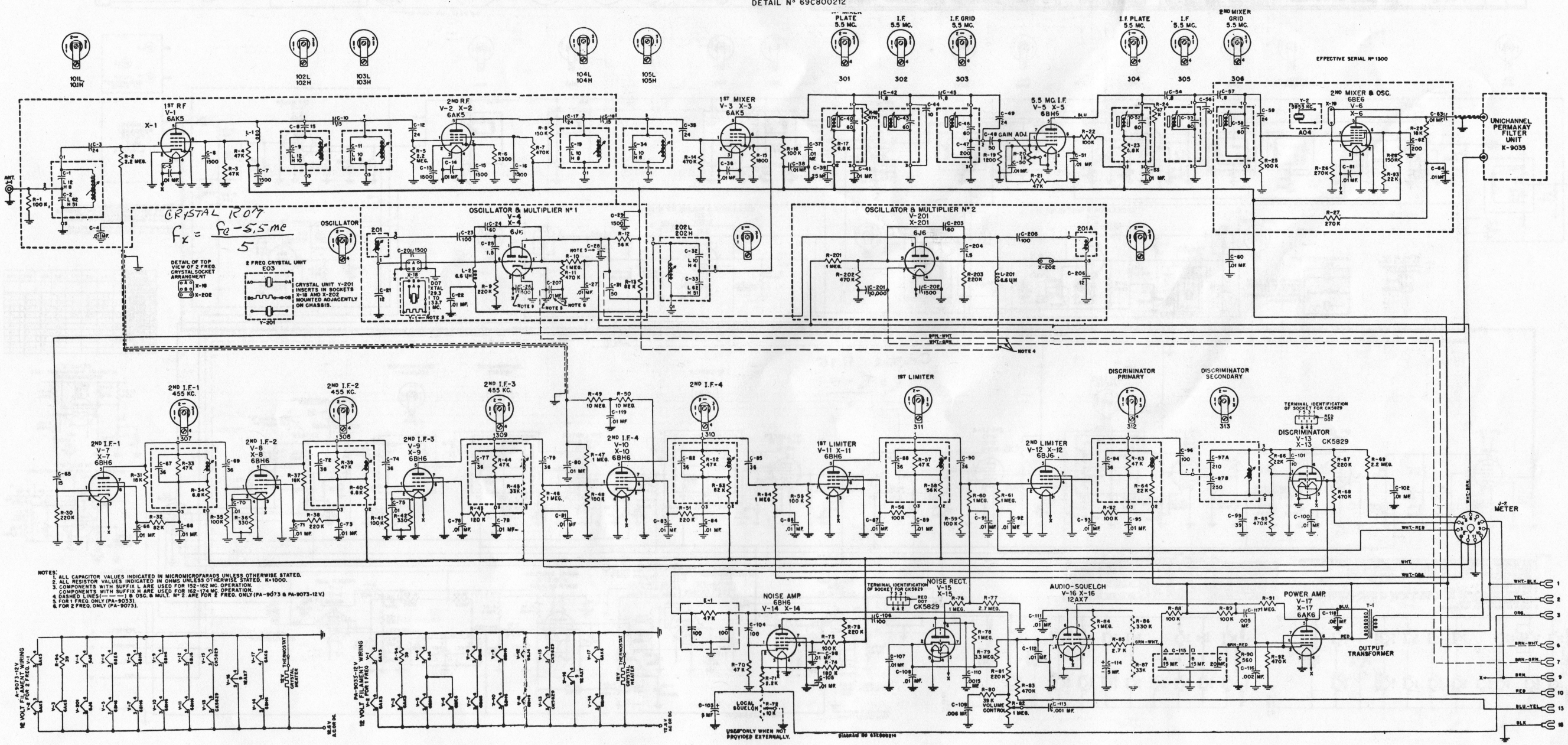

NOTES:
1. ALL CAPACITOR VALUES INDICATED IN MICROMICROFARADS UNLESS OTHERWISE STATED.
2. ALL RESISTOR VALUES INDICATED IN OHMS UNLESS OTHERWISE STATED. K=1000.
3. COMPONENTS WITH SUFFIX L ARE USED FOR 152-162 MC. OPERATION.
   COMPONENTS WITH SUFFIX H ARE USED FOR 162-174 MC. OPERATION.
4. DASHED LINES INDICATE R.F. & MULT. N° 2 ARE FOR 2 FREQ. ONLY (PA-9073 & PA-9073-12 V.)
5. FOR 1 FREQ. ONLY (PA-9033)
6. FOR 2 FREQ. ONLY (PA-9073).

ALIGNMENT PROCEDURE

STEP	METER POSITION	SIGNAL APPLIED	ADJUSTMENT	METER READING	NOMINAL METER READINGS - (NOISE ONLY)
1	4	455 KC. APPLIED AT FILTER OR 2nd IF-1 PIN #1	508 DISC. SEC	0	METER POS. #1 0 TO -1.5
2	5	"	507 DISC. PRI	MAX	#2 -13 TO -19
3	REPEAT	STEPS #1 & #2	—	—	#3 -33 TO -37
4	3	455 KC. APPLIED AT FILTER OR 2nd IF-1 PIN #1	506 LIMITER	MAX	#4 0 TO +2
5	1	(DO NOT " SATURATE)	505 IF AMP-3	MAX	#5 -22 TO -28
6	6	NONE	201 OSCILLATOR	MAX	#6 -10 TO -15
7	2	f_0 AT ANTENNA - DO NOT SATURATE	504-503-502-501-202 105-104-103-102-101	MAX (UNSATURATED)	NOTE: - READINGS MAY VARY WIDELY FROM
8	4	f_0 FROM FREQ METER OR KNOWN STATION	201 OSCILLATOR	0	ONE SET TO ANOTHER. RECEIVER SENSITIVITY
9	1 OR 2	f_0 BELOW SATURATION	504-503-502-501-202 105-104-103-102-101	MAX (UNSATURATED)	IS ONLY MEANS OF ESTABLISHING PERFORMANCE

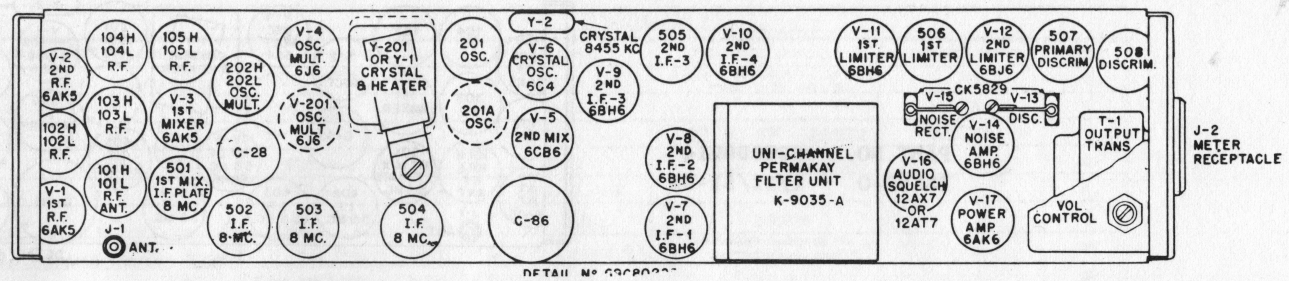

DETAIL No 63CR0232

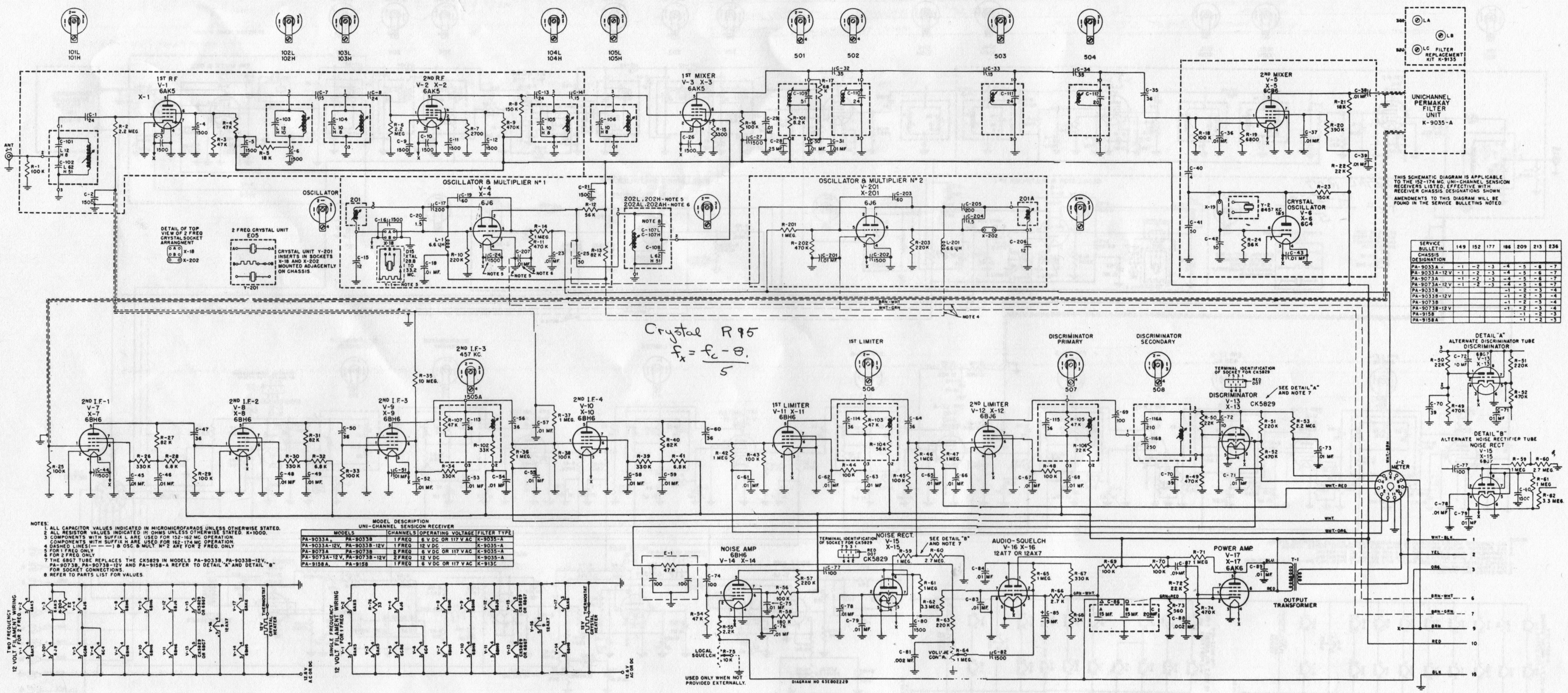

NOTES:
1. ALL CAPACITOR VALUES INDICATED IN MICROMICROFARADS UNLESS OTHERWISE STATED.
2. ALL RESISTOR VALUES INDICATED IN OHMS UNLESS OTHERWISE STATED. K=1000.
3. COMPONENTS WITH SUFFIX L ARE USED FOR 152-162 MC OPERATION. COMPONENTS WITH SUFFIX H ARE USED FOR 162-174 MC OPERATION.
4. DASHED LINES (— — —) B OSC & MULT N° 2 ARE FOR 2 FREQ. ONLY
5. FOR 1 FREQ ONLY.
6. FOR 2 FREQ ONLY.
7. THE 6BH6 TUBE REPLACES THE CK5829 IN MODELS PA-9033B, PA-9033B-12V, PA-9073B, PA-9073B-12V AND PA-9158-A REFER TO DETAIL "A" AND DETAIL "B" FOR SOCKET CONNECTIONS.
8. REFER TO PARTS LIST FOR VALUES.

MODEL DESCRIPTION
UNI-CHANNEL SENSICON RECEIVER

MODELS		CHANNELS	OPERATING VOLTAGE	FILTER TYPE
PA-9033A,	PA-9033B	1 FREQ	6 V DC OR 117 V AC	K-9035-A
PA-9033A-12V,	PA-9033B-12V	1 FREQ	12 V DC	K-9035-A
PA-9073A	PA-9073B	2 FREQ	6 V DC OR 117 V AC	K-9035-A
PA-9073A-12V,	PA-9073B-12V	2 FREQ	12 V DC	K-9035-A
PA-9158-A,	PA-9158	1 FREQ	6 V DC OR 117 V AC	K-9135C

THIS SCHEMATIC DIAGRAM IS APPLICABLE TO THE 152-174 MC UNI-CHANNEL SENSICON RECEIVERS LISTED, EFFECTIVE WITH RECEIVER CHASSIS DESIGNATIONS SHOWN

AMENDMENTS TO THIS DIAGRAM WILL BE FOUND IN THE SERVICE BULLETINS NOTED

SERVICE BULLETIN	149	152	177	186	209	213	236
CHASSIS DESIGNATION							
PA-9033A	-1	-2	-3	-4	-5	-6	-7
PA-9033A-12V	-1	-2	-3	-4	-5	-6	-7
PA-9073A	-1	-2	-3	-4	-5	-6	-7
PA-9073A-12V	-1	-2	-3	-4	-5	-6	-7
PA-9033B				-1	-2	-3	-4
PA-9033B-12V				-1	-2	-3	-4
PA-9073B				-1	-2	-3	-4
PA-9073B-12V				-1	-2	-3	-4
PA-9158					-1	-2	-3
PA-9158A					-1	-2	-3

MOTOROLA SCHEMATIC DIAGRAM
152-174 MC. *UNI-CHANNEL SENSICON* RECEIVER

PART NO. 63E802229
ISSUE-E 7/2/51

50.

MOTOROLA SCHEMATIC DIAGRAM
1-FREQUENCY, 152-174 MC.
UNI-CHANNEL SENSICON RECEIVER

ALIGNMENT PROCEDURE

STEP	METER POSITION	SIGNAL APPLIED	ADJUSTMENT	METER READING	NOMINAL METER READINGS (NOISE ONLY)
1	4	455 KC APPLIED AT FILTER OR 2nd IF-1 "PIN"1	L17	0 - DISC. SEC.	METER POS. #1 -5 to -4 μa
2	5	"	L16	MAX - DISC. PRI.	#2 -28 to -38 μa
3	REPEAT	STEPS #1 & #2			#3 -25 to -32 μa
4	2	455 KC APPLIED AT FILTER OR 2nd IF-1 "PIN"1	L15	MAX - LIMITER	#4 ±2
5	1	"	L14 & L13	MAX - 2nd IF	#5 -19 to -25 μa
6	6	NONE	L6	MAX - 1ST OSC	#6 -12 to -35 μa
7	2	½ AT ANTENNA TERMINAL BELOW SATURATION	L9, L10, L11, L12	MAX - 1ST IF	NOTE: ABOVE READINGS MAY VARY
8	2	"	L1, L2, L3, L4, L5, L7, L8	MAX - RF & OSC MULT	WIDELY FROM ONE SET TO ANOTHER.
9	4	½ FROM FREQ METER OR STATION	L6	0 - FREQ SET	RECEIVER SENSITIVITY IS THE ONLY
10	2	½ BELOW SATURATION	REPEAT STEPS #7 & #8		MEANS FOR ESTABLISHING PERFORMANCE

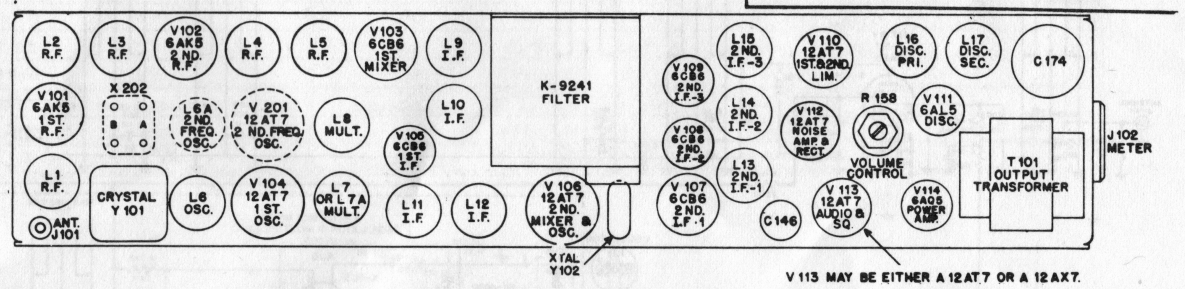

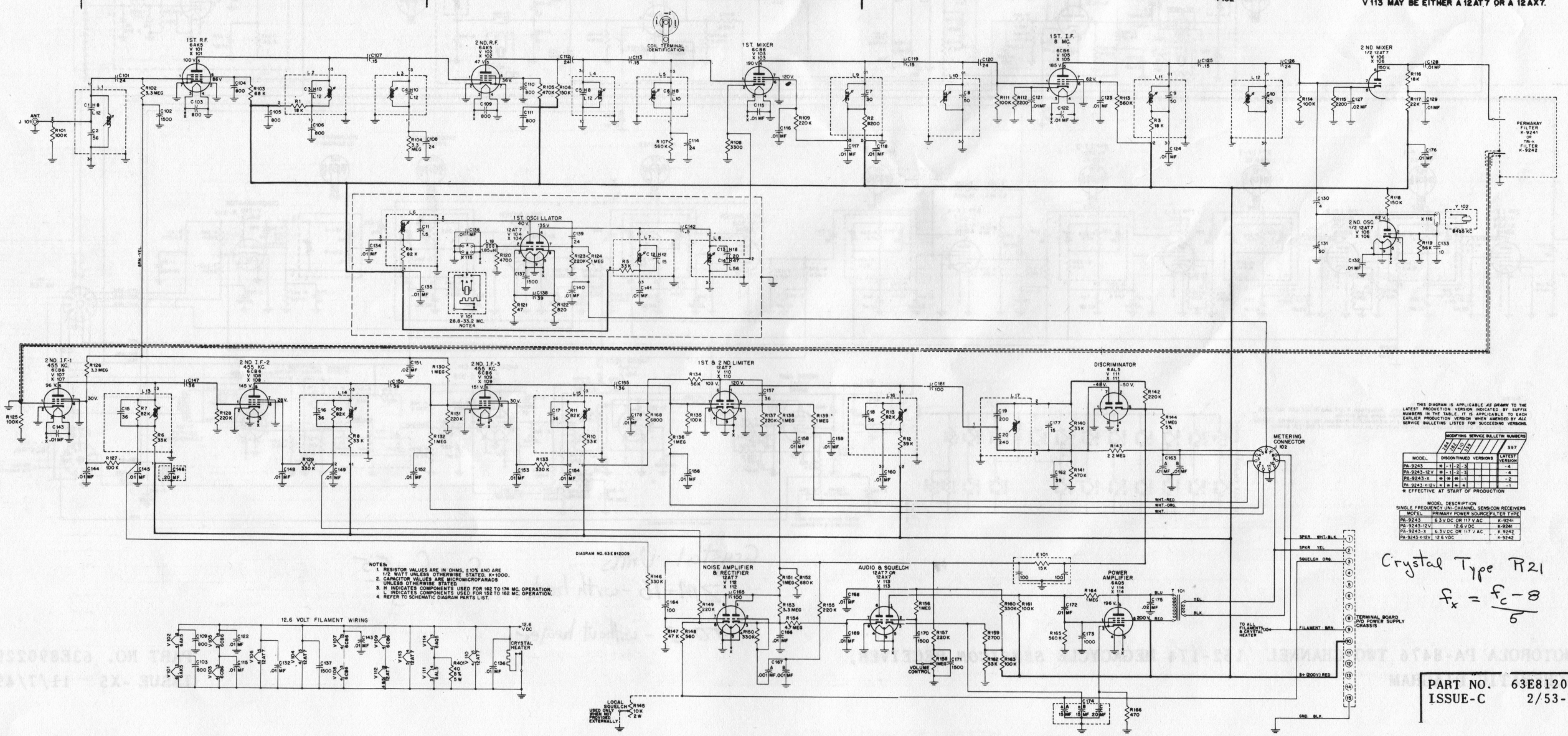

NOTES:
1. RESISTOR VALUES ARE IN OHMS, ±10% AND ARE 1/2 WATT UNLESS OTHERWISE STATED. K=1000.
2. CAPACITOR VALUES ARE MICROMICROFARADS UNLESS OTHERWISE STATED.
3. N INDICATES COMPONENTS USED FOR 162 TO 174 MC. OPERATION. M INDICATES COMPONENTS USED FOR 152 TO 162 MC. OPERATION.
4. REFER TO SCHEMATIC DIAGRAM PARTS LIST.

THIS DIAGRAM IS APPLICABLE AS DRAWN TO THE LATEST PRODUCTION VERSION INDICATED BY SUFFIX NUMBERS IN THE TABLE. IT IS APPLICABLE TO EACH EARLIER PRODUCTION VERSION WHEN AMENDED BY ALL SERVICE BULLETINS LISTED FOR SUCCEEDING VERSIONS.

MODEL	MODIFYING SERVICE BULLETIN NUMBERS	LATEST VERSION
	397	
	DISCONTINUED VERSIONS	
PA-9243	W-1-(2-3)	-4
PA-9243-12V	W-1-(2-3)	-4
PA-9243-X	M N N -1	-2
PA-9243-1-(2)	X X X X	-1

W EFFECTIVE AT START OF PRODUCTION

MODEL DESCRIPTION
SINGLE FREQUENCY UNI-CHANNEL SENSICON RECEIVERS

MODEL	PRIMARY POWER SOURCE	FILTER TYPE
PA-9243	6.3 V DC OR 117 V AC	K-9241
PA-9243-12V	12.6 V DC	K-9241
PA-9243-X	6.3 V DC OR 117 V AC	K-9242
PA-9243-1-(2)	12.6 VDC	K-9242

Crystal Type R21

$f_x = \frac{f_c - 8}{5}$

PART NO.	63E812009
ISSUE-C	2/53-RS

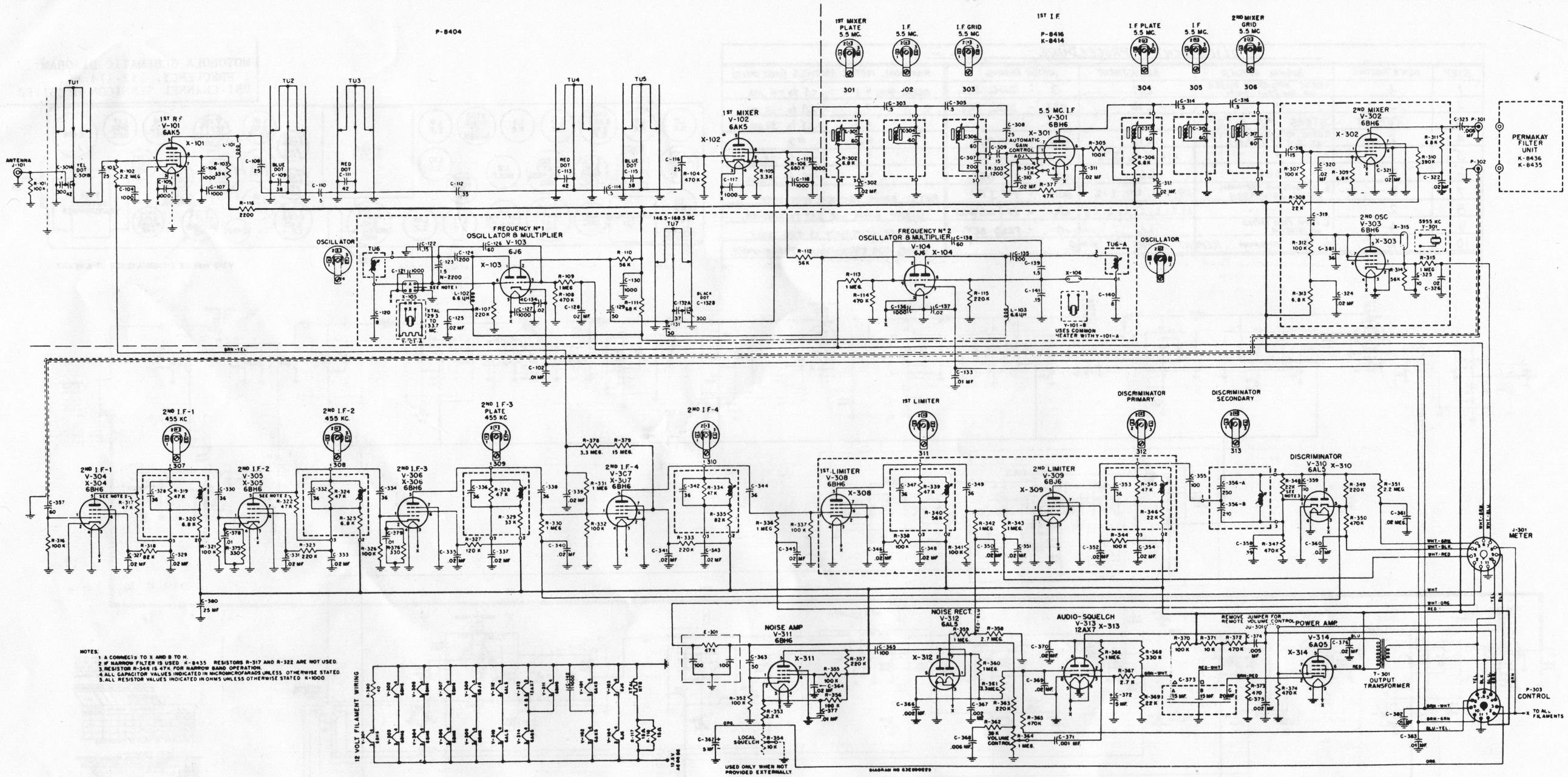

Crystal Units

ZM-16 - with heater $f_x = \frac{f_c - 5.5}{5}$

TO-1 - without heater

MOTOROLA PA-8476 TWO CHANNEL 152-174 MEGACYCLE *SENSICON* RECEIVER,
SCHEMATIC DIAGRAM

PART NO. 63E890229
ISSUE -X5 11/7/49

MOTOROLA SCHEMATIC DIAGRAM
152-174 MC. TWO FREQUENCY
SENSICON RECEIVER CHASSIS

PART NO. 63E810687
ISSUE-G 7/53-RS

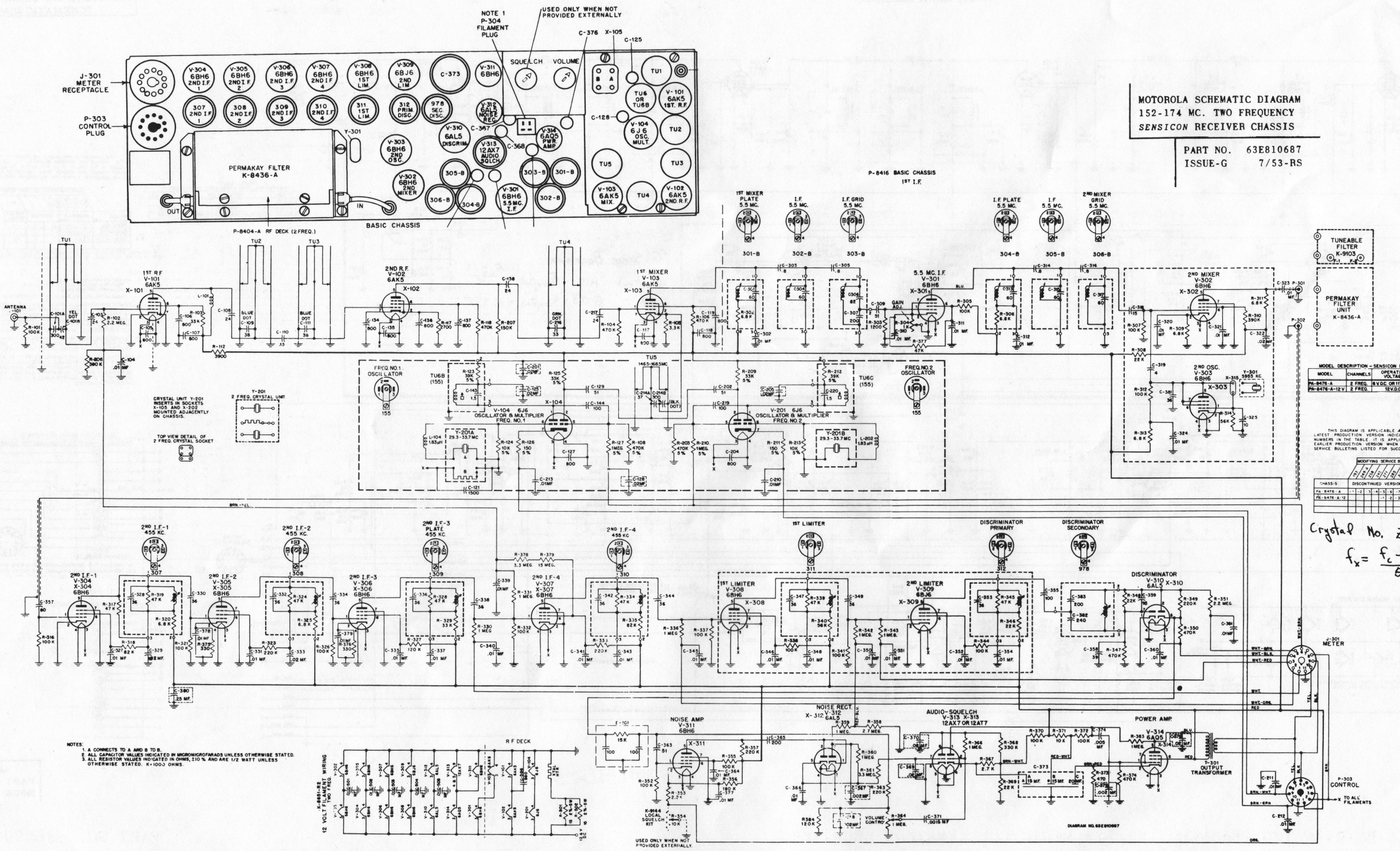

MODEL DESCRIPTION – SENSICON RECEIVER			
MODEL	CHANNELS	OPERATING VOLTAGE	FILTER TYPE
PA-8476-A	2 FREQ.	6 VDC OR 117 V AC	K-8436-A
PA-8476-A-12V	2 FREQ.	12 VDC	K-8436-A

THIS DIAGRAM IS APPLICABLE AS DRAWN TO THE LATEST PRODUCTION VERSION INDICATED BY SUFFIX NUMBERS IN THE TABLE. IT IS APPLICABLE TO EACH EARLIER PRODUCTION VERSION WHEN AMENDED BY ALL SERVICE BULLETINS LISTED FOR SUCCEEDING VERSIONS.

	MODIFYING SERVICE BULLETIN NUMBERS											
												454
CHASSIS	DISCONTINUED VERSIONS											LATEST VERSION
PA-8476-A	-1	-2	-3	-4	-5	-6	-7	-8	-9	-10		-11
PA-8476-A-12			-2	-3	-4	-5	-6					-7

Crystal No. ZM16

$f_x = \frac{f_c - 5.5}{5}$

NOTES:
1. A CONNECTS TO A AND B TO B.
2. ALL CAPACITOR VALUES INDICATED IN MICROMICROFARADS UNLESS OTHERWISE STATED.
3. ALL RESISTOR VALUES INDICATED IN OHMS, ±10 % AND ARE 1/2 WATT UNLESS OTHERWISE STATED. K=1000 OHMS.

TA140 SERIES, 2-FREQ., 144-174 MC.
UNIVERSAL UNI-CHANNEL RECEIVER
SCHEMATIC DIAGRAM

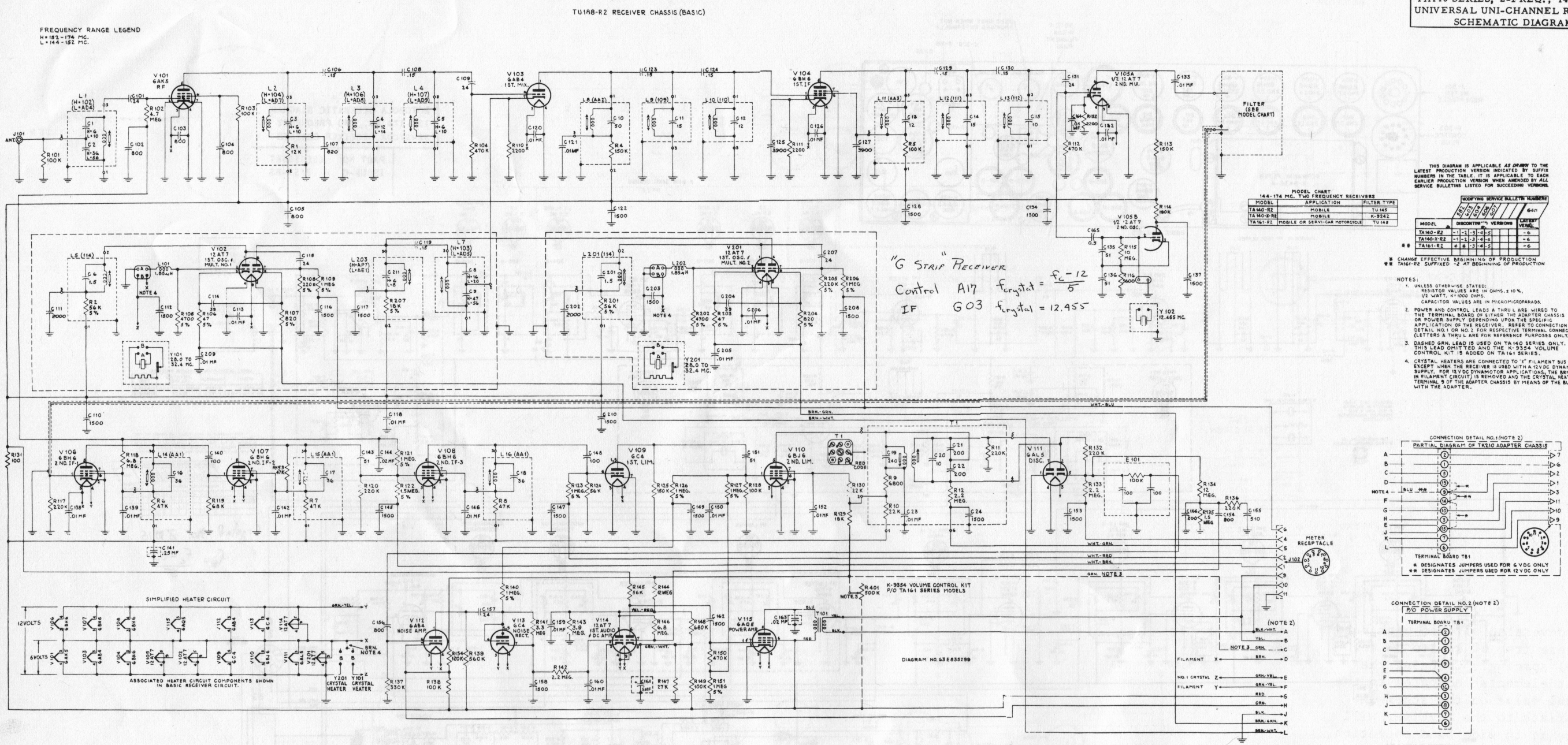

MODEL CHART
144-174 MC. TWO FREQUENCY RECEIVERS

MODEL	APPLICATION	FILTER TYPE
TA140-R2	MOBILE	TU145
TA140-S-R2	MOBILE	K-9242
TA161-R2	MOBILE OR SERVI-CAR MOTORCYCLE	TU145

THIS DIAGRAM IS APPLICABLE *AS DRAWN* TO THE LATEST PRODUCTION VERSION INDICATED BY SUFFIX NUMBERS IN THE TABLE. IT IS APPLICABLE TO EACH EARLIER PRODUCTION VERSION WHEN AMENDED BY *ALL* SERVICE BULLETINS LISTED FOR SUCCEEDING VERSIONS.

MODEL	DISCONTINUED VERSIONS (MODIFYING SERVICE BULLETIN NUMBERS) 282	403	404	406	407		LATEST VERSION
TA140-R2	-1	-2	-3	-4	-5		-6
TA140-X-R2	-1	-2	-3	-4	-5		-6
TA161-R2	*	*	-3	-4	-5		-6

* CHANGE EFFECTIVE BEGINNING OF PRODUCTION
** TA161-R2 SUFFIXED -2 AT BEGINNING OF PRODUCTION

NOTES:

1. UNLESS OTHERWISE STATED:
   RESISTOR VALUES ARE IN OHMS, ± 10%,
   1/2 WATT, K=1000 OHMS.
   CAPACITOR VALUES ARE IN MICROMICROFARADS.
2. POWER AND CONTROL LEADS A THRU L ARE WIRED TO THE TERMINAL BOARD OF EITHER THE ADAPTER CHASSIS OR POWER SUPPLY DEPENDING UPON THE SPECIFIC APPLICATION OF THE RECEIVER. REFER TO CONNECTION DETAIL NO. 1 OR NO. 2 FOR RESPECTIVE TERMINAL CONNECTIONS. (LETTERS A THRU L ARE FOR REFERENCE PURPOSES ONLY.)
3. DASHED GRN. LEAD IS USED ON TA140 SERIES ONLY. THIS LEAD OMITTED AND THE K-9354 VOLUME CONTROL KIT IS ADDED ON TA161 SERIES.
4. CRYSTAL HEATERS ARE CONNECTED TO "X" FILAMENT BUS FOR ALL APPLICATIONS EXCEPT WHEN THE RECEIVER IS USED WITH A 12VDC DYNAMOTOR TYPE POWER SUPPLY. FOR 12VDC DYNAMOTOR APPLICATIONS, THE BRN. LEAD (SHOWN DOTTED IN FILAMENT CIRCUIT) IS REMOVED AND THE CRYSTAL HEATERS ARE CONNECTED TO TERMINAL 9 OF THE ADAPTER CHASSIS BY MEANS OF THE BLU JUMPER SUPPLIED WITH THE ADAPTER.

CONNECTION DETAIL NO. 1 (NOTE 2)
PARTIAL DIAGRAM OF TK210 ADAPTER CHASSIS

* DESIGNATES JUMPERS USED FOR 6 VDC ONLY
** DESIGNATES JUMPERS USED FOR 12 VDC ONLY

CONNECTION DETAIL NO. 2 (NOTE 2)
P/O POWER SUPPLY

MOTOROLA
PART NO. 63E835299
ISSUE - G 9/54 UM

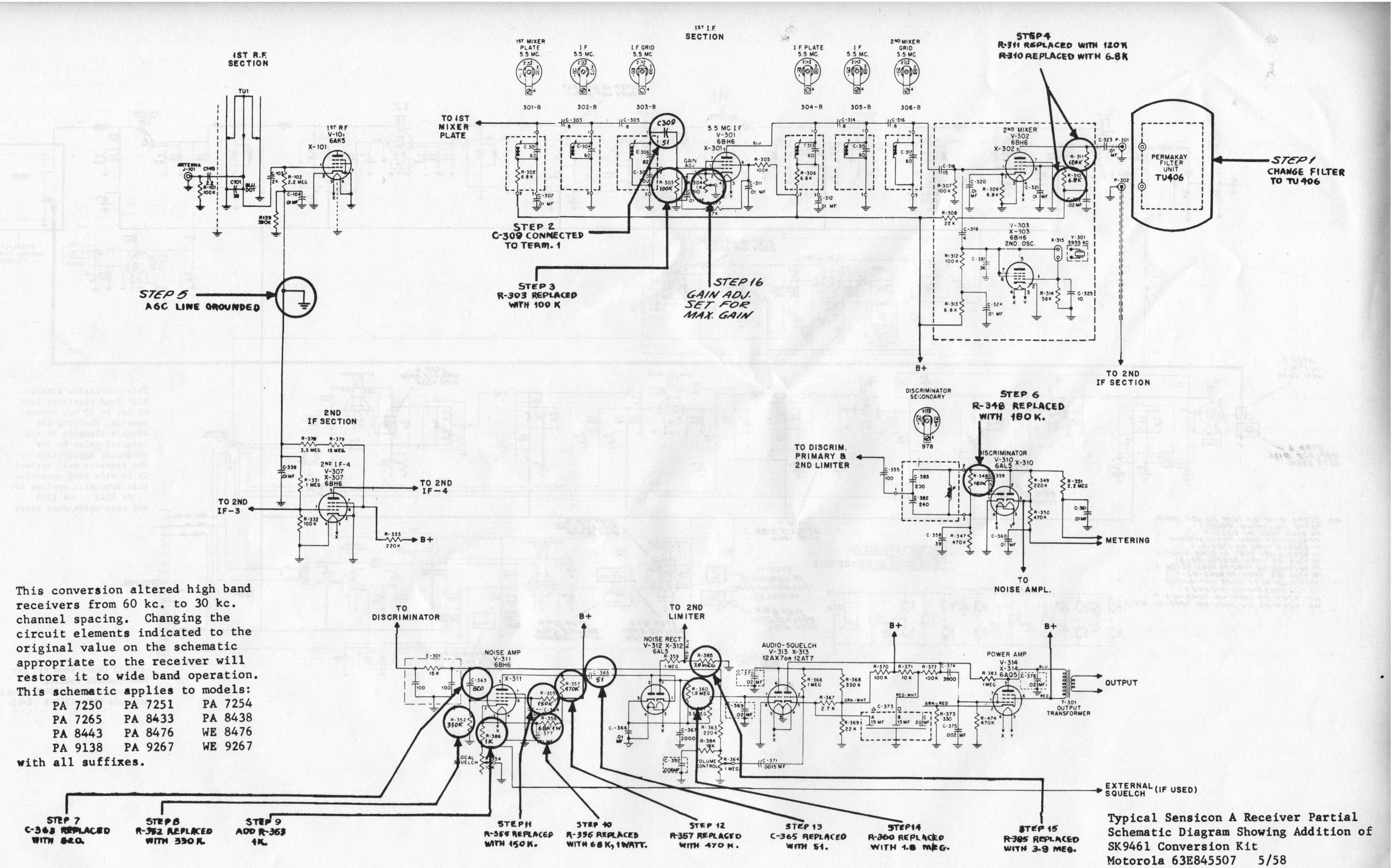

This conversion altered high band receivers from 60 kc. to 30 kc. channel spacing. Changing the circuit elements indicated to the original value on the schematic appropriate to the receiver will restore it to wide band operation. This schematic applies to models:

PA 7250	PA 7251	PA 7254
PA 7265	PA 8433	PA 8438
PA 8443	PA 8476	WE 8476
PA 9138	PA 9267	WE 9267

with all suffixes.

Typical Sensicon A Receiver Partial Schematic Diagram Showing Addition of SK9461 Conversion Kit
Motorola 63E845507 5/58

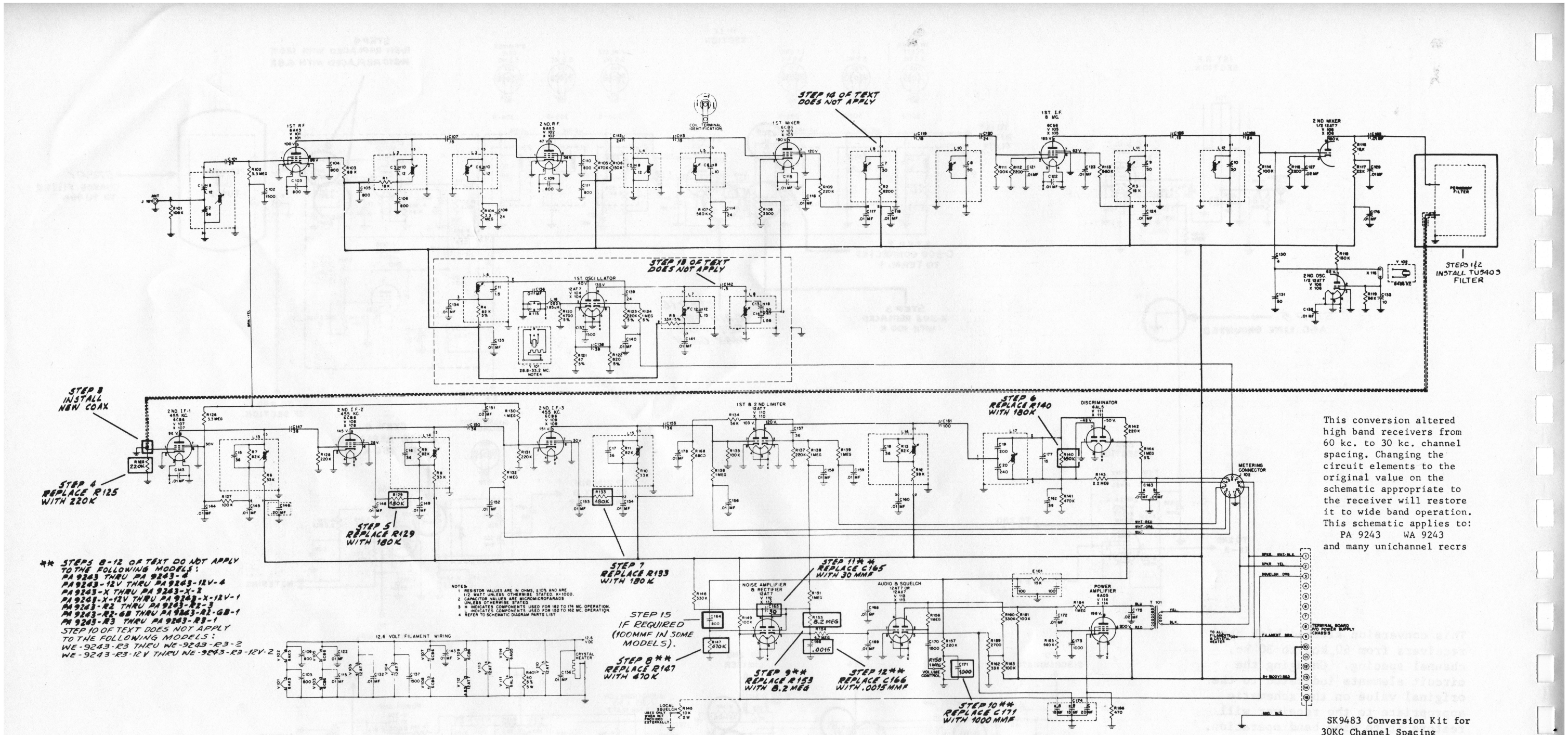

** STEPS 8-12 OF TEXT DO NOT APPLY TO THE FOLLOWING MODELS:
PA 9243 THRU PA 9243-4
PA 9243-12V THRU PA 9243-12V-4
PA 9243-X THRU PA 9243-X-2
PA 9243-X-12V THRU PA 9243-X-12V-1
PA 9243-R2 THRU PA 9243-R2-3
PA 9243-R3-GB THRU PA 9243-R3-GB-1
PA 9243-R3 THRU PA 9243-R3-1
STEP 10 OF TEXT DOES NOT APPLY TO THE FOLLOWING MODELS:
WE-9243-R3 THRU WE-9243-R3-2
WE-9243-R3-12V THRU WE-9243-R3-12V-2

This conversion altered high band receivers from 60 kc. to 30 kc. channel spacing. Changing the circuit elements to the original value on the schematic appropriate to the receiver will restore it to wide band operation. This schematic applies to:
PA 9243 WA 9243
and many unichannel recrs

SK9483 Conversion Kit for
30KC Channel Spacing
Operation of 150-174MC Receivers
Motorola CEPD-1319-B 2/61

144-174 Mc Portable Receiver
Schematic Diagram
Motorola No. 63E845748-R
5/58-CP

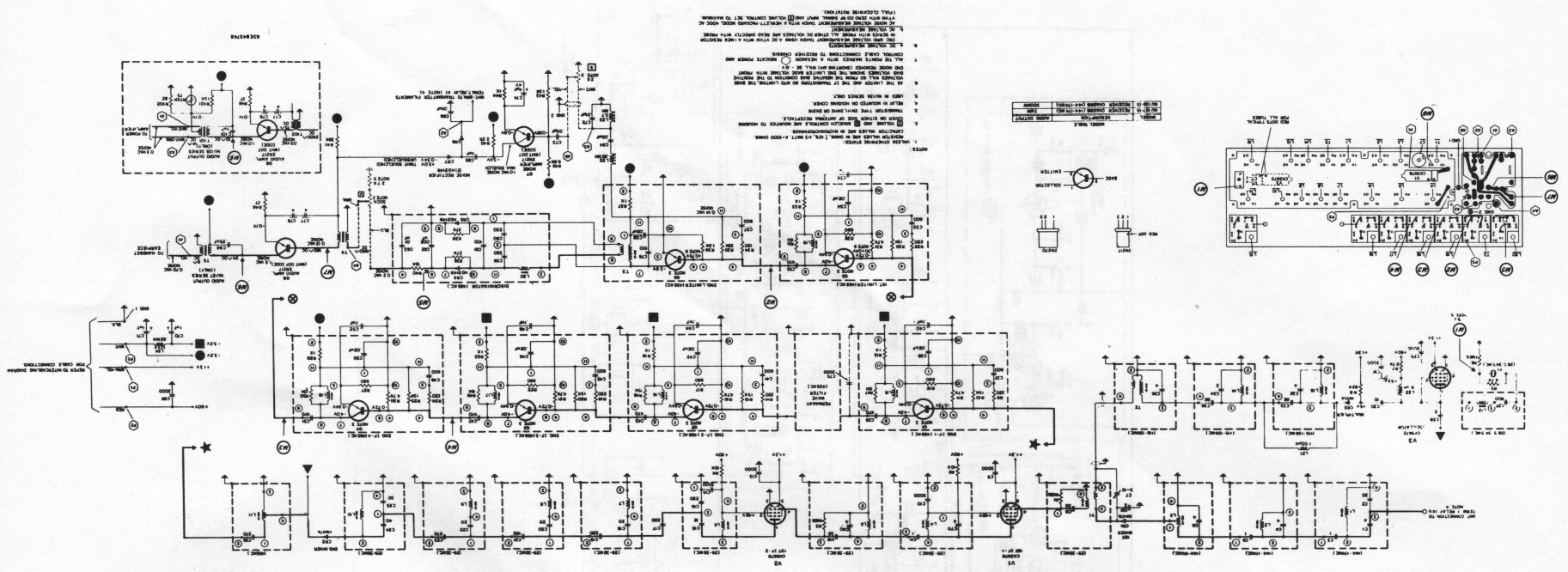

PART NO. 63E823731
ISSUE - C 1/54-CP

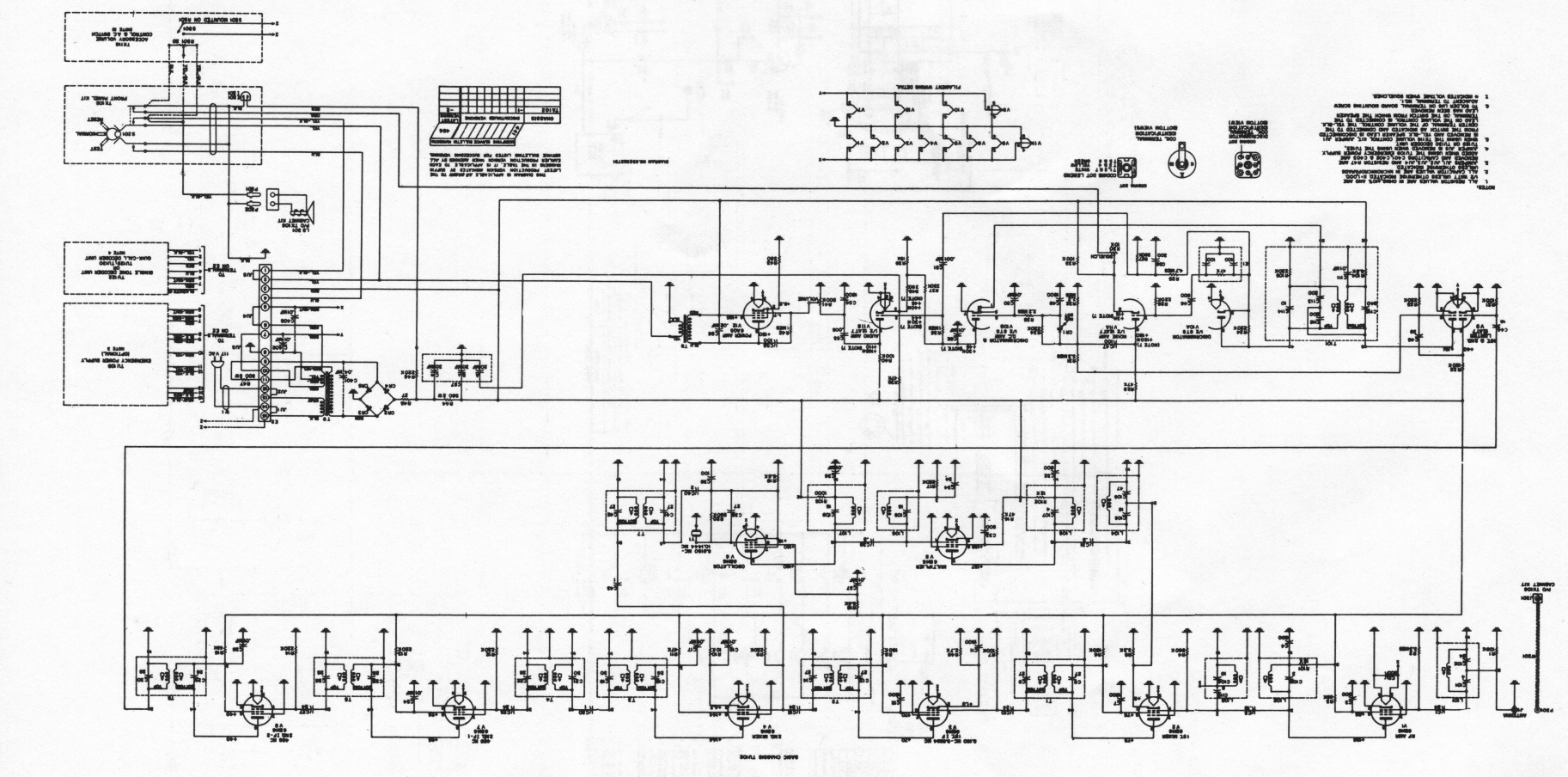

MOTOROLA SCHEMATIC AND INTER-UNIT CABLING DIAGRAM
146-172 MC. MONITOR FM RECEIVER, TA102

Single Frequency "Private-Line" Receiver
Schematic Diagram
Motorola No. 63E854758-G
2/12/99-CP

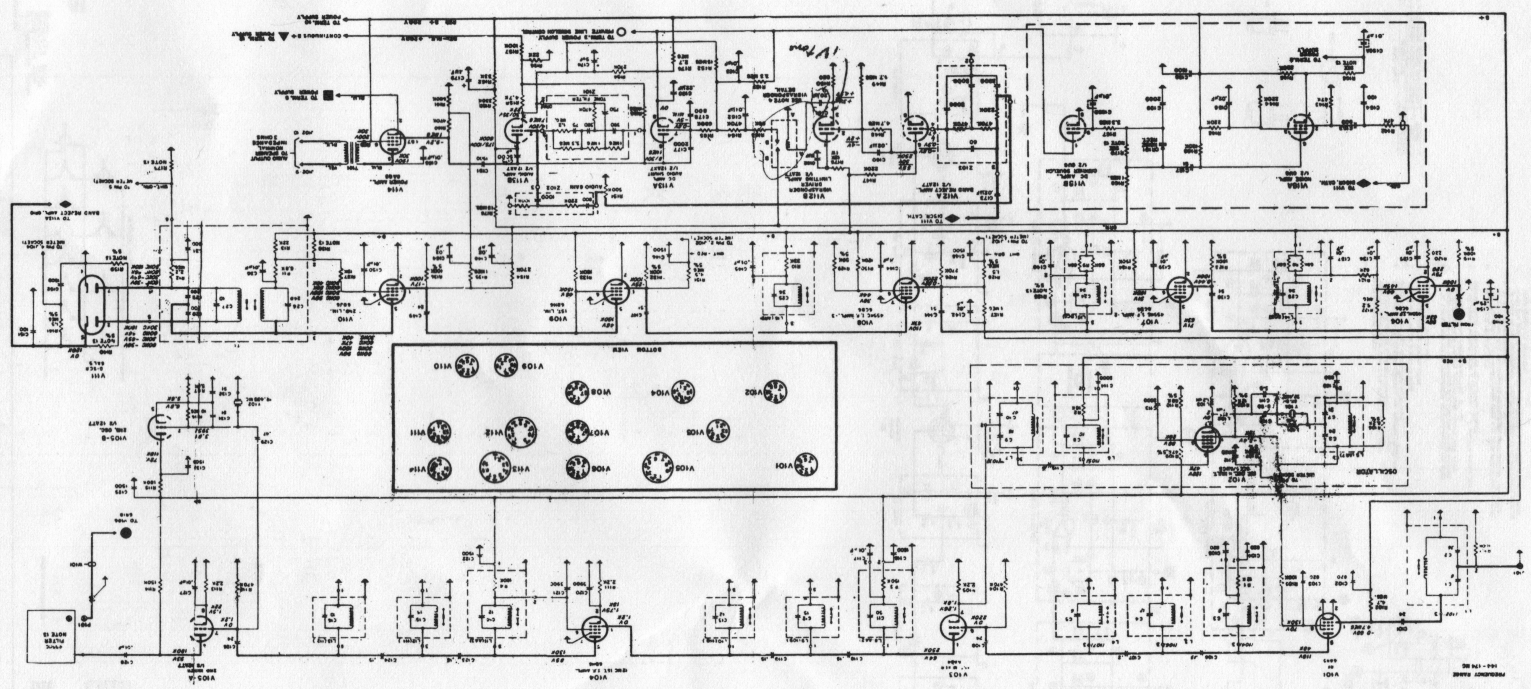

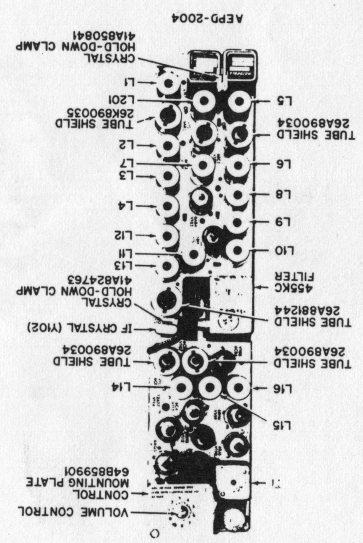

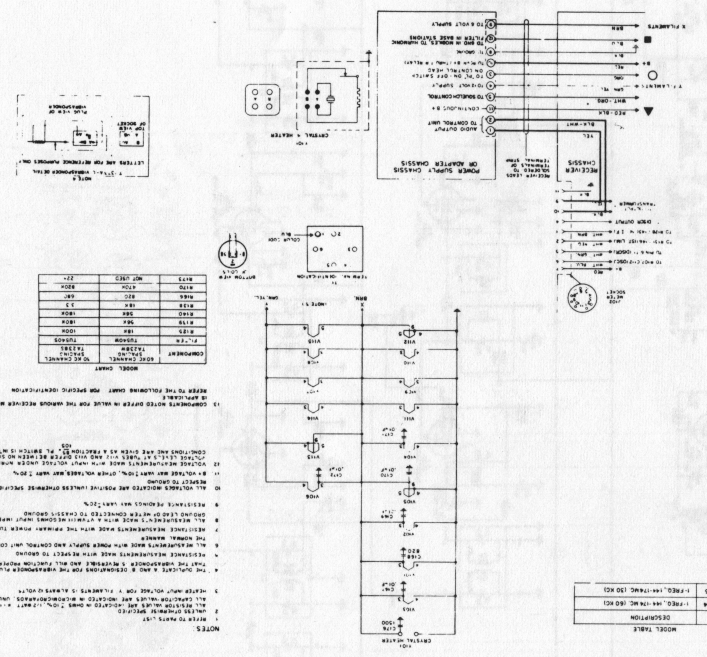

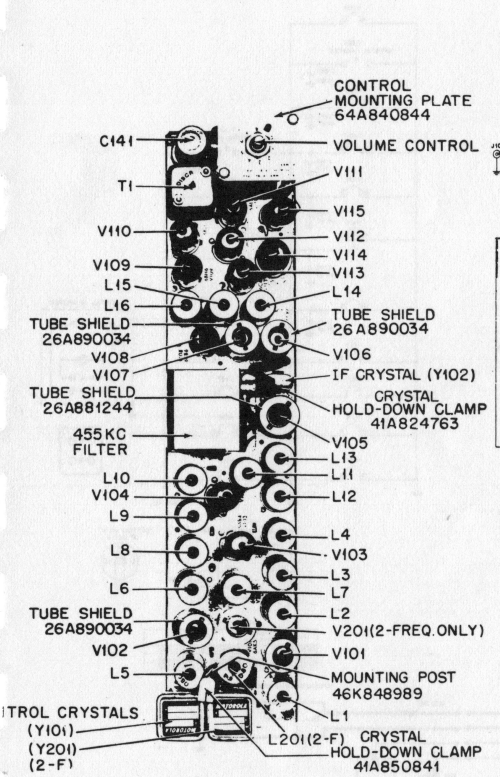

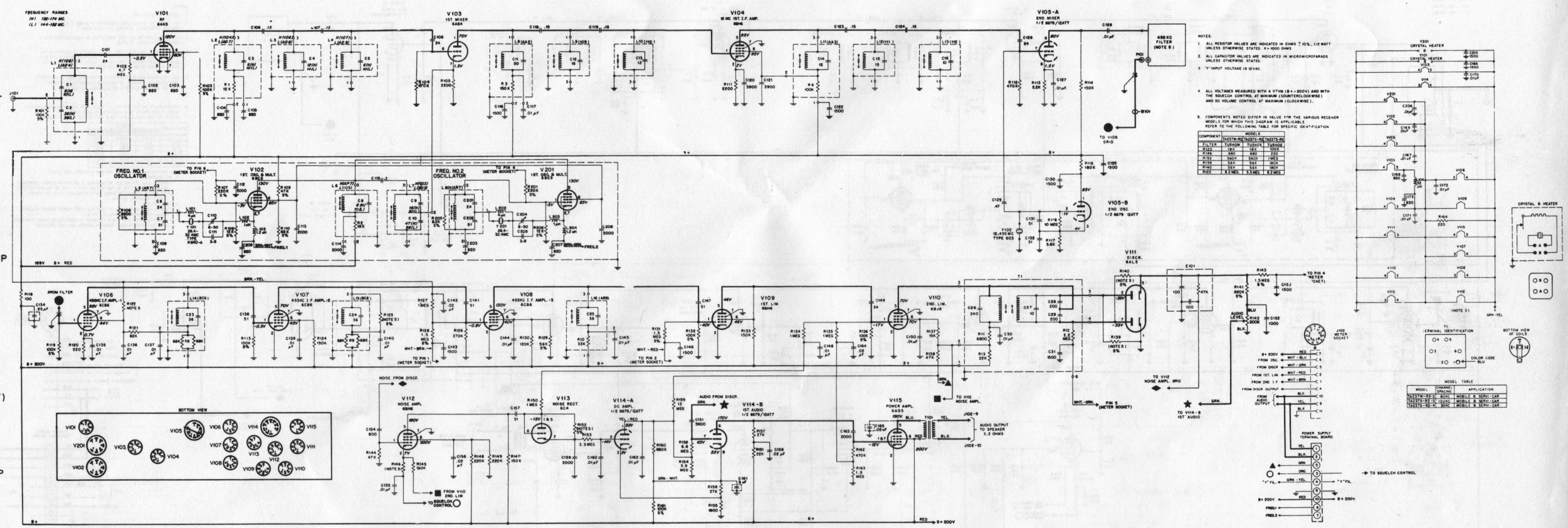

TA237 Series Two-Frequency Receiver
Schematic Diagram and Parts Location Detail
Motorola No. 63E854793-D
4/24/59-RCS

144-174 MC TWO-FREQUENCY SENSICON "G" RECEIVER SCHEMATIC DIAGRAM

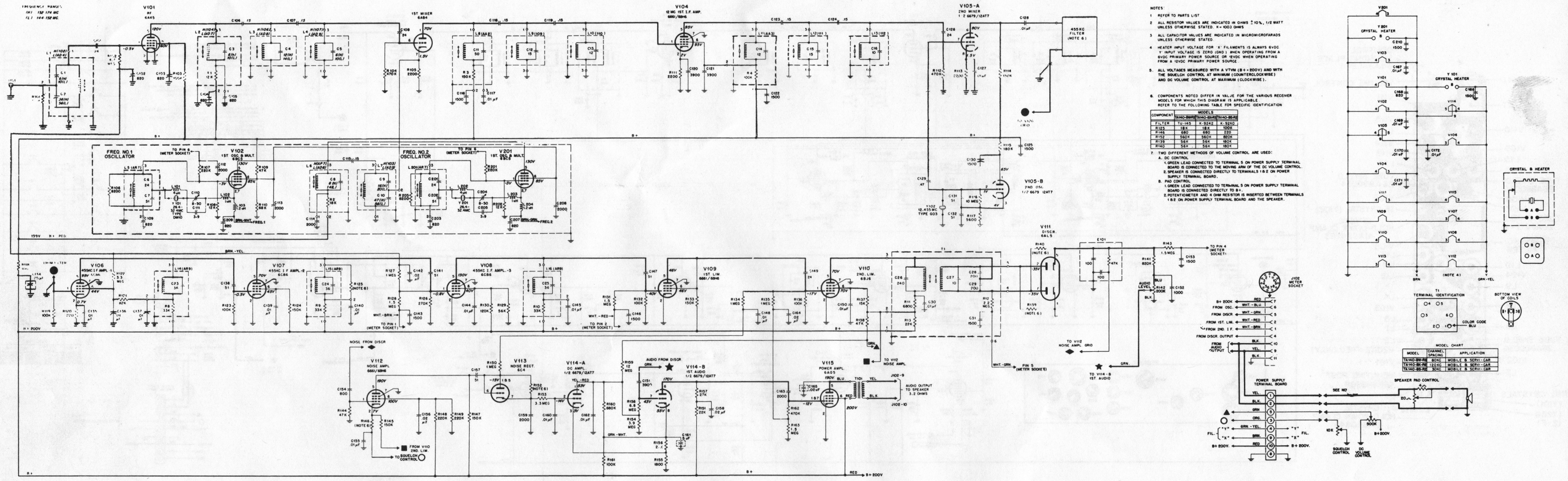

NOTES:

1. REFER TO PARTS LIST
2. ALL RESISTOR VALUES ARE INDICATED IN OHMS ±10%, 1/2 WATT UNLESS OTHERWISE STATED. K = 1000 OHMS
3. ALL CAPACITOR VALUES ARE INDICATED IN MICROMICROFARADS UNLESS OTHERWISE STATED.
4. HEATER INPUT VOLTAGE FOR "X" FILAMENTS IS ALWAYS 6VDC "Y" INPUT VOLTAGE IS ZERO (GND.) WHEN OPERATING FROM A 6VDC PRIMARY POWER SOURCE OR 12VDC WHEN OPERATING FROM A 12VDC PRIMARY POWER SOURCE.
5. ALL VOLTAGES MEASURED WITH A VTVM (B+ = 200V) AND WITH THE SQUELCH CONTROL AT MINIMUM (COUNTERCLOCKWISE) AND DC VOLUME CONTROL AT MAXIMUM (CLOCKWISE).
6. COMPONENTS NOTED DIFFER IN VALUE FOR THE VARIOUS RECEIVER MODELS FOR WHICH THIS DIAGRAM IS APPLICABLE. REFER TO THE FOLLOWING TABLE FOR SPECIFIC IDENTIFICATION

COMPONENT	MODELS		
	TA140-BM-RE	TA140-BM-RE	TA140-BS-RE
FILTER	TU-145	K-9242	K-9240
R125	18K	18K	100K
R146	680	680	220
R152	560K	560K	820K
R159	56K	56K	180K
R140	56K	56K	180K

7. TWO DIFFERENT METHODS OF VOLUME CONTROL ARE USED:
   A. DC CONTROL
      1. GREEN LEAD CONNECTED TO TERMINAL 5 ON POWER SUPPLY TERMINAL BOARD IS CONNECTED TO THE MOVING ARM OF THE DC VOLUME CONTROL.
      2. SPEAKER IS CONNECTED DIRECTLY TO TERMINALS 1 & 2 ON POWER SUPPLY TERMINAL BOARD.
   B. PAD CONTROL
      1. GREEN LEAD CONNECTED TO TERMINAL 5 ON POWER SUPPLY TERMINAL BOARD IS CONNECTED DIRECTLY TO B+.
      2. POTENTIOMETER AND 4 OHM RESISTOR IS INSERTED BETWEEN TERMINALS 1 & 2 ON POWER SUPPLY TERMINAL BOARD AND THE SPEAKER.

MOTOROLA
PART NO. 63E839288
ISSUE - C 1/57-CP

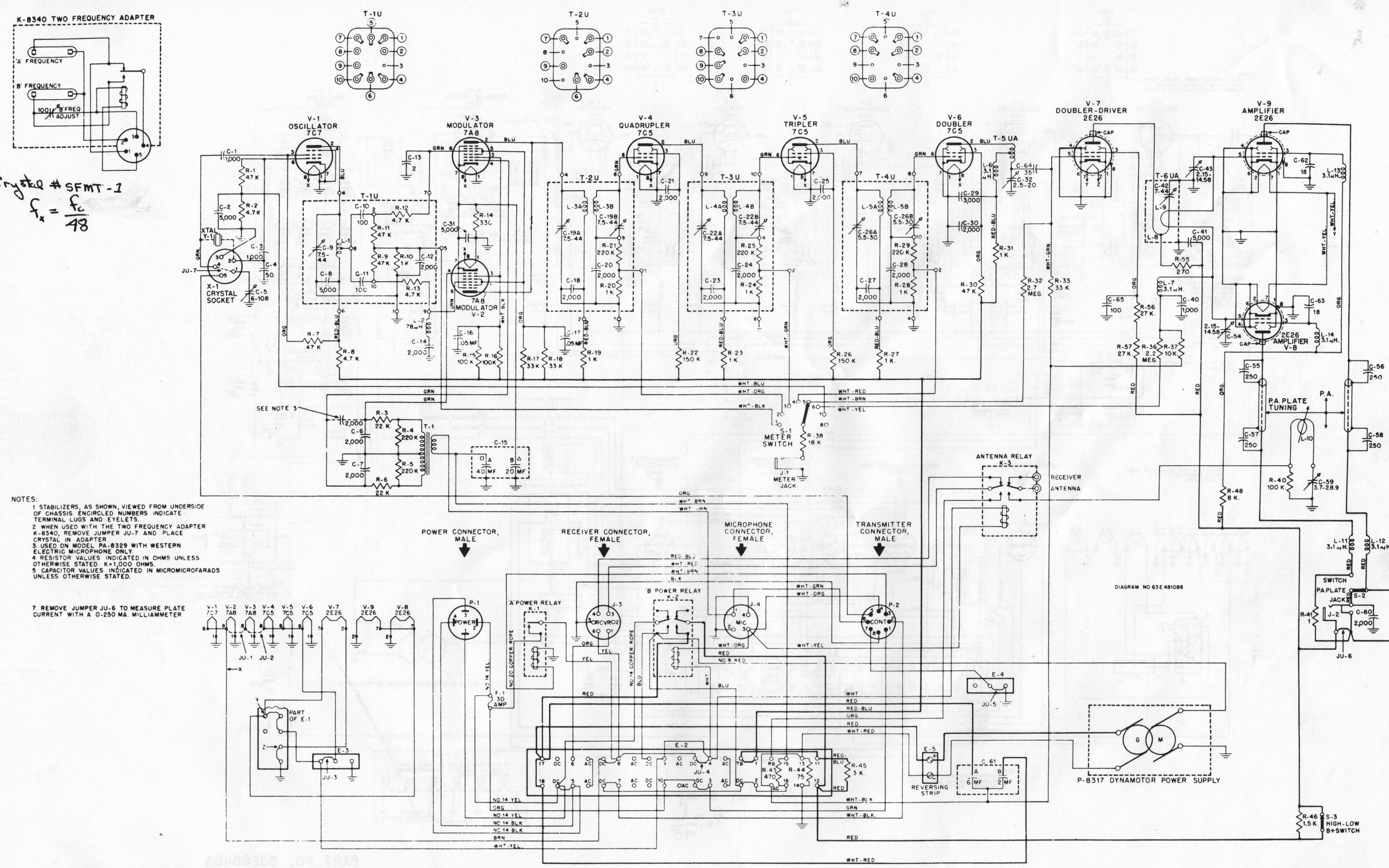

NOTES:

1. STABILIZERS, AS SHOWN, VIEWED FROM UNDERSIDE OF CHASSIS. ENCIRCLED NUMBERS INDICATE TERMINAL LUGS AND EYELETS.
2. WHEN USED WITH THE TWO FREQUENCY ADAPTER K-8340, REMOVE JUMPER JU-7 AND PLACE CRYSTAL IN ADAPTER.
3. USED ON MODEL PA-8329 WITH WESTERN ELECTRIC MICROPHONE ONLY.
4. RESISTOR VALUES INDICATED IN OHMS UNLESS OTHERWISE STATED. K=1,000 OHMS.
5. CAPACITOR VALUES INDICATED IN MICROMICROFARADS UNLESS OTHERWISE STATED.

7. REMOVE JUMPER JU-6 TO MEASURE PLATE CURRENT WITH A 0-250 MA. MILLIAMMETER

150-172 MC

MOTOROLA FMTU-30D(D) (PA-8329-D) TRANSMITTER, SCHEMATIC DIAGRAM

PART NO. 63E481088

ISSUE O

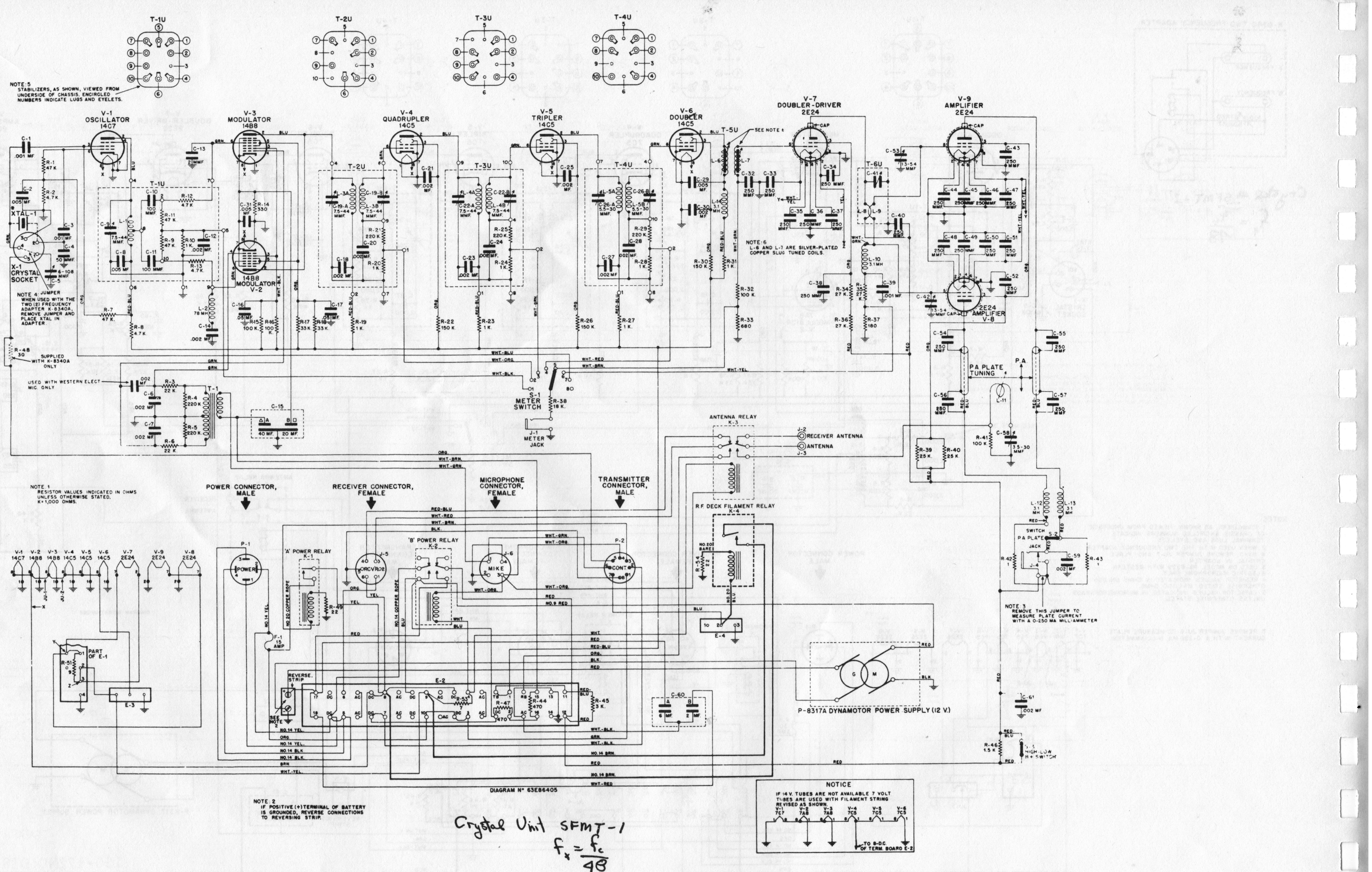

Crystal Unit SFMT-1

$f_x = \frac{f_c}{48}$

150-172MC TRANSMITTER MODEL FMTU-30-12D, (PA-8345) SCHEMATIC DIAGRAM

PART NO. 63E86405
ISSUE C

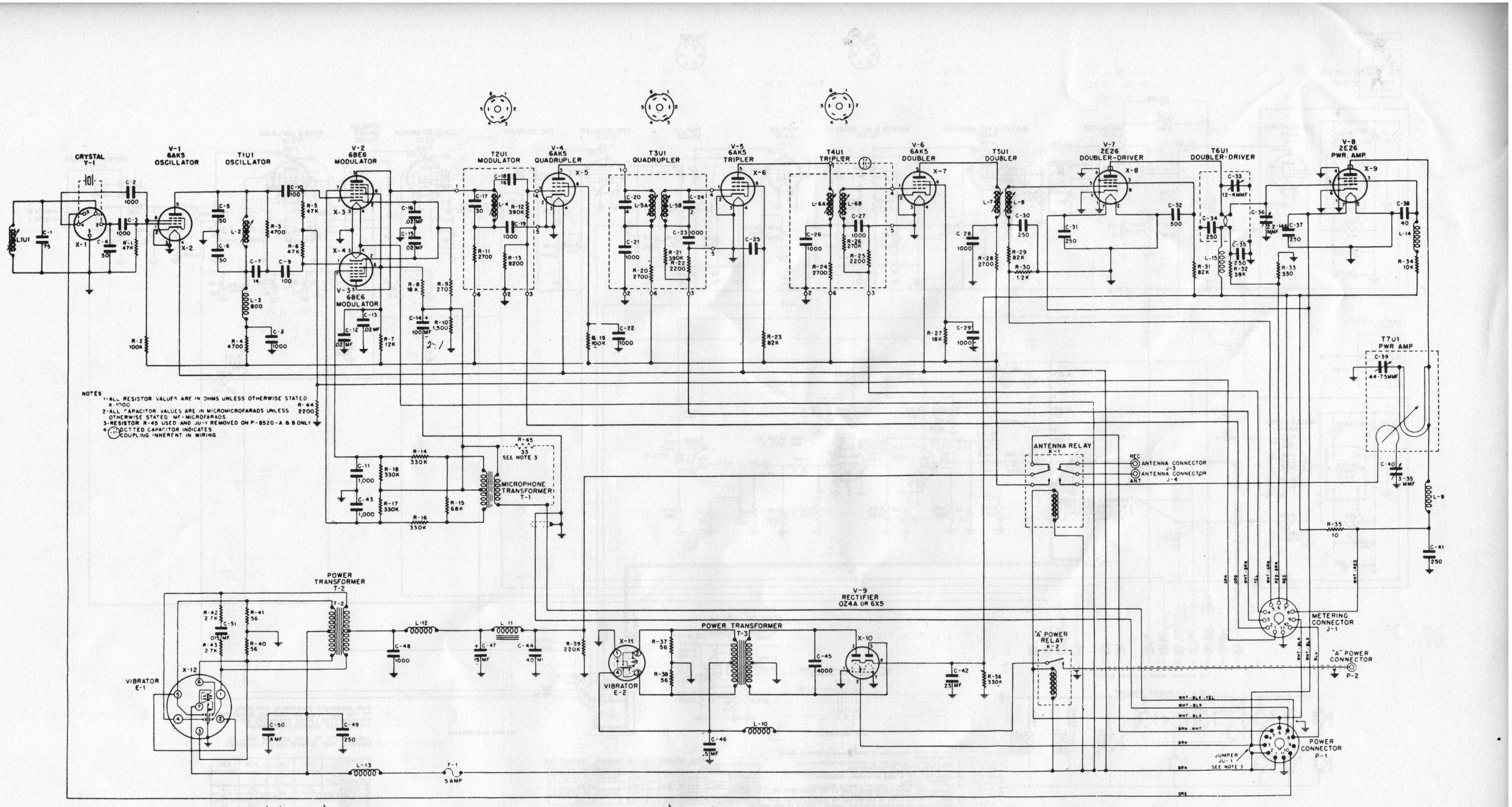

Switch Position 1 2 3 4 5 6 7 8 PA

Meter Reading 10 10 12 12 15 15 20 25 42

← minimum → exact

Crystal Unit SFMT-1

$f_x = \frac{f_c}{48}$

P8520

150-172MC DISPATCHER TRANSMITTER

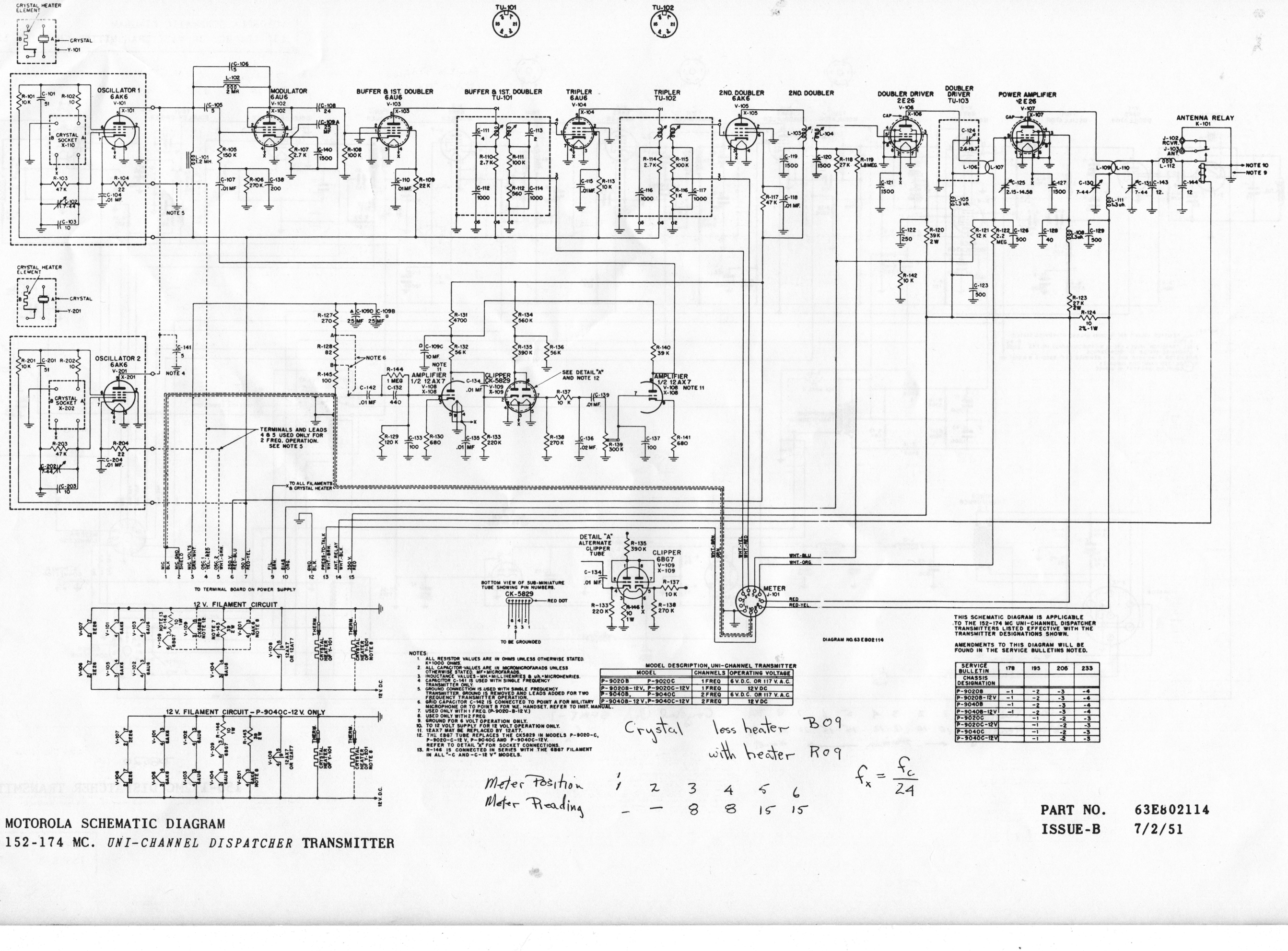

NOTES:

1. ALL RESISTOR VALUES ARE IN OHMS UNLESS OTHERWISE STATED. K=1000 OHMS.
2. ALL CAPACITOR VALUES ARE IN MICROMICROFARADS UNLESS OTHERWISE STATED. MF=MICROFARADS.
3. INDUCTANCE VALUES - MH = MILLIHENRIES & uh = MICROHENRIES.
4. CAPACITOR C-141 IS USED WITH SINGLE FREQUENCY TRANSMITTER ONLY.
5. GROUND CONNECTION IS USED WITH SINGLE FREQUENCY TRANSMITTER. GROUND IS REMOVED AND LEADS ADDED FOR TWO FREQUENCY TRANSMITTER OPERATION.
6. GRID CAPACITOR C-142 IS CONNECTED TO POINT A FOR MILITARY MICROPHONE OR TO POINT B FOR W.E. HANDSET. REFER TO INST. MANUAL.
7. USED ONLY WITH 1 FREQ. (P-9020-B-12 V.)
8. USED ONLY WITH 2 FREQ.
9. GROUND FOR 6 VOLT OPERATION ONLY.
10. TO 12 VOLT SUPPLY FOR 12 VOLT OPERATION ONLY.
11. 12AX7 MAY BE REPLACED BY 12A77.
12. THE 6BG7 TUBE REPLACES THE CK5829 IN MODELS P-9020-C, P-9020-C-12 V., P-9040C AND P-9040C-12V. REFER TO DETAIL "A" FOR SOCKET CONNECTIONS.
13. R-146 IS CONNECTED IN SERIES WITH THE 6BG7 FILAMENT IN ALL "-C AND -C-12 V" MODELS.

MODEL DESCRIPTION, UNI-CHANNEL TRANSMITTER

MODEL		CHANNELS	OPERATING VOLTAGE
P-9020B	P-9020C	1 FREQ	6 V.D.C. OR 117 V.A.C.
P-9020B-12V,	P-9020C-12V	1 FREQ	12 V DC
P-9040B,	P-9040C	2 FREQ	6 V.D.C. OR 117 V.A.C.
P-9040B-12 V,	P-9040C-12V	2 FREQ	12 V DC

Crystal less heater B09
with heater R09

$f_x = \frac{f_c}{24}$

Meter Position	1	2	3	4	5	6
Meter Reading	—	—	8	8	15	15

THIS SCHEMATIC DIAGRAM IS APPLICABLE TO THE 152-174 MC UNI-CHANNEL DISPATCHER TRANSMITTERS LISTED EFFECTIVE WITH THE TRANSMITTER DESIGNATIONS SHOWN.

AMENDMENTS TO THIS DIAGRAM WILL BE FOUND IN THE SERVICE BULLETINS NOTED.

SERVICE BULLETIN	178	195	206	233
CHASSIS DESIGNATION				
P-9020B	-1	-2	-3	-4
P-9020B-12V	-1	-2	-3	-4
P-9040B	-1	-2	-3	-4
P-9040B-12V	-1	-2	-3	-4
P-9020C		-1	-2	-3
P-9020C-12V		-1	-2	-3
P-9040C		-1	-2	-3
P-9040C-12V		-1	-2	-3

DIAGRAM NO. 63 E 802 114

MOTOROLA SCHEMATIC DIAGRAM

152-174 MC. *UNI-CHANNEL DISPATCHER* TRANSMITTER

PART NO. 63E802114

ISSUE-B 7/2/51

MOTOROLA SCHEMATIC DIAGRAM
152-174 MC. 30 WATT TRANSMITTER CHASSIS, 12.6 VDC

Switch Position	1	2	3	4	5	6	7	8	PA
Meter Reading	–	–	20	20	20	25	21	–	40 max

Crystal B03
with heater R03 6V, R03A 12V $f_x = \frac{f_c}{24}$

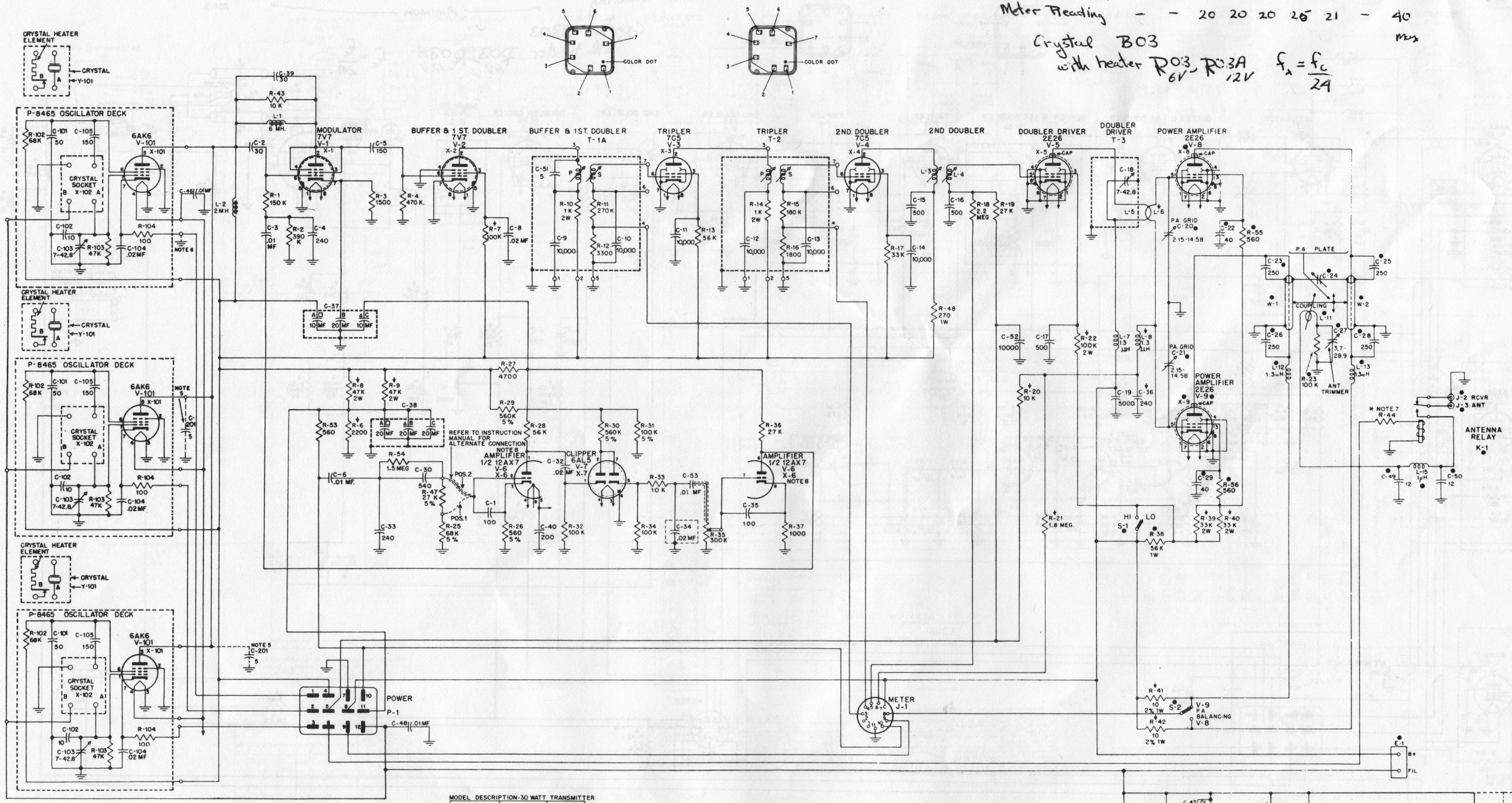

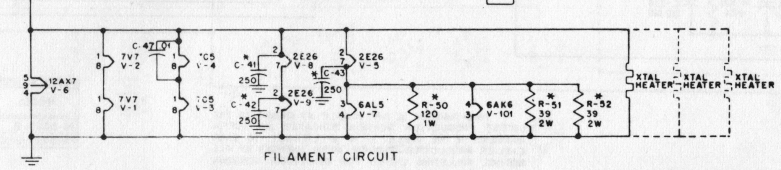

FILAMENT CIRCUIT

TWO FREQUENCY TRANSMITTER: R-52 REPLACED BY SECOND OSCILLATOR TUBE FILAMENT; SECOND CRYSTAL HEATER ADDED.
THREE FREQUENCY TRANSMITTER: R-51 & R-52 REPLACED BY SECOND & THIRD OSCILLATOR TUBE FILAMENTS; SECOND & THIRD CRYSTAL HEATERS ADDED.

THIS DIAGRAM IS APPLICABLE *AS DRAWN* TO THE LATEST PRODUCTION VERSION INDICATED BY SUFFIX NUMBERS IN THE TABLE. IT IS APPLICABLE TO EACH EARLIER PRODUCTION VERSION WHEN AMENDED BY *ALL* SERVICE BULLETINS LISTED FOR SUCCEEDING VERSIONS.

CHASSIS	MODIFYING SERVICE BULLETIN NUMBERS: 208	265	313	323	357	369	393	434	LATEST VERSION
	DISCONTINUED VERSIONS								
PA-8664-B	-1	-2	-3	-4	-5	-6	-7		-8
PA-8664-B-C2		-1	-2	-3	-4	-5	-6		-7
PA-8664-B-C3					-1	-2	-3		-4

MODEL DESCRIPTION-30 WATT TRANSMITTER

MODEL	CHANNELS	PRIMARY VOLTAGE
PA-8664-B	1 FREQUENCY	12 VDC
PA-8664-B C2	2 FREQUENCY	12 VDC
PA-8664-B-C3	3 FREQUENCY	12 VDC

NOTES:
1. RESISTOR VALUES INDICATED IN OHMS UNLESS OTHERWISE STATED. K=1,000 OHMS.
2. CAPACITOR VALUES INDICATED IN MICROMICROFARADS UNLESS OTHERWISE STATED. MF=MICROFARADS.
3. INDUCTANCE VALUES: MH=MILLIHENRYS, µH=MICROHENRYS
4. CONNECTORS SHOWN AS VIEWED FROM WIRING SIDE.
5. CAPACITOR C-201 P/O K-8582-A BLANK OSC. DECK, SEE TABLE.
6. GROUND CONNECTION USED ONLY FOR ONE FREQ. XMTR (PA-8664-B). GROUND MUST BE REMOVED WHEN TWO OR MORE FREQ. ARE USED.
7. 15 OHMS WITH COAXIAL ANTENNA RELAY. 30 OHMS WITH NON-COAXIAL ANTENNA RELAY.
8. 12AX7 MAY BE REPLACED BY 12AT7.

● INDICATES COMPONENTS WHICH ARE PART OF P-8466 R.F. OUTPUT DECK.
♦ INDICATES COMPONENTS WHICH ARE PART OF K-8468 CHASSIS KIT. ALL OTHER COMPONENTS ARE PART OF P-8430-A BASIC CHASSIS.
✱ INDICATES COMPONENTS WHICH ARE PART OF K-8627-A 12 V CONVERSION KIT.

PART NO. 63E802358
ISSUE-H 7/53-RS

MOTOROLA SCHEMATIC DIAGRAM
152-174 MC. 60 WATT TRANSMITTER CHASSIS, 12.6 VDC

Switch Position	1	2	3	4	5	6	7	8	PA
Meter Reading	–	–	20	20	20	25	31	-	40 max

← minimum →

Crystal B03
with heater R03 6V, R03A 12V

$f_k = \frac{f_c}{24}$

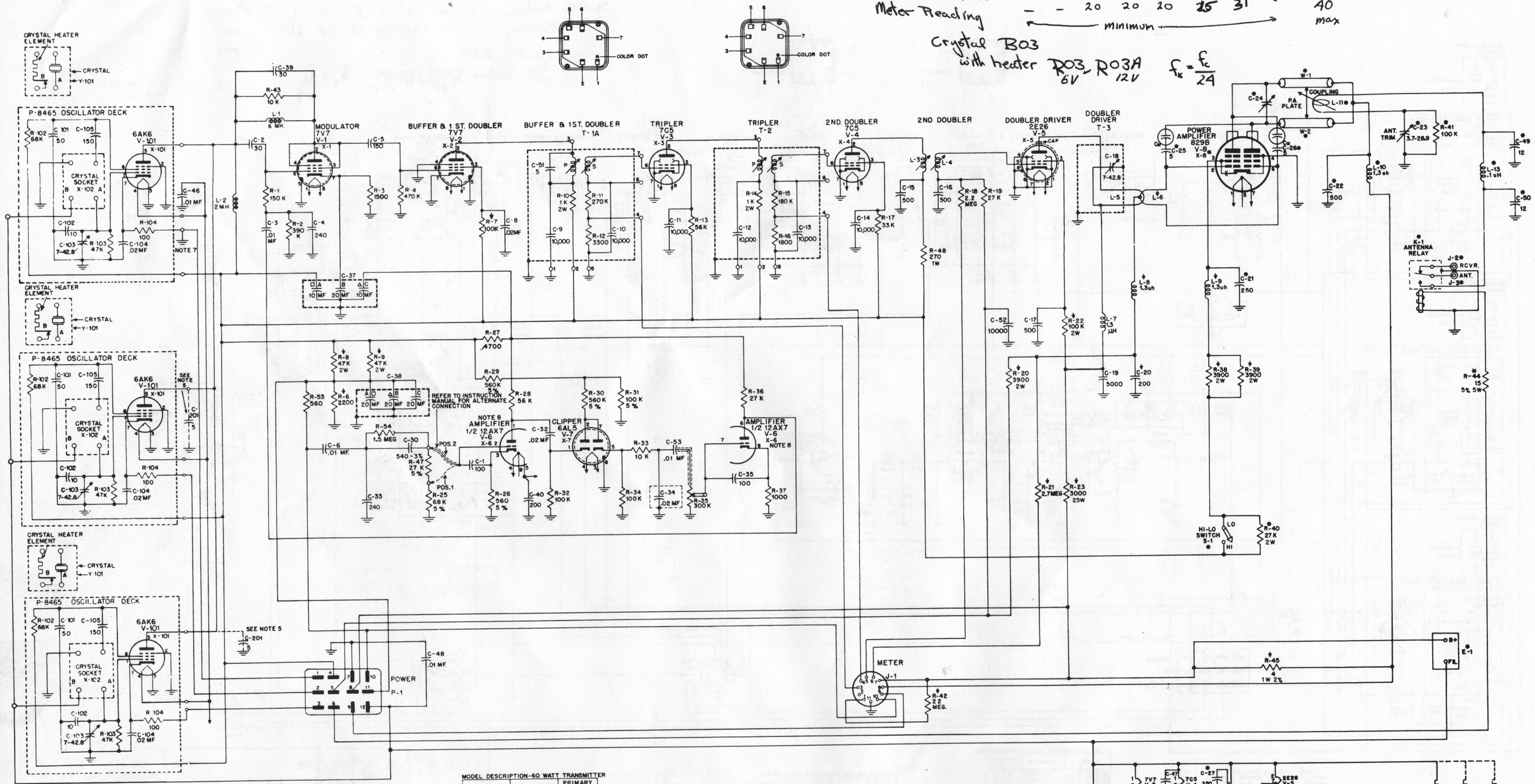

THIS DIAGRAM IS APPLICABLE *AS DRAWN* TO THE LATEST PRODUCTION VERSION INDICATED BY SUFFIX NUMBERS IN THE TABLE. IT IS APPLICABLE TO EACH EARLIER PRODUCTION VERSION WHEN AMENDED BY *ALL* SERVICE BULLETINS LISTED FOR SUCCEEDING VERSIONS.

CHASSIS	MODIFYING SERVICE BULLETIN NUMBERS: 208	265	313	347	323	357	369	393	434
	DISCONTINUED VERSIONS								LATEST VERSION
PA-8665-B	-1	-2	-3	-4	-5	-6	-7	-8	-9
PA-8492-B-12V									*

* EFFECTIVE AT BEGINING OF PRODUCTION

MODEL DESCRIPTION-60 WATT TRANSMITTER

MODEL	CHANNELS	PRIMARY VOLTAGE
PA-8665-B	1 FREQUENCY	12 VDC
PA-8492-B-12V	2 FREQUENCY	12 VDC

NOTES:
1. RESISTOR VALUES INDICATED IN OHMS UNLESS OTHERWISE STATED. K=1,000 OHMS.
2. CAPACITOR VALUES INDICATED IN MICROMICROFARADS UNLESS OTHERWISE STATED.
3. INDUCTANCE VALUES: MH=MILLIHENRYS, µH=MICROHENRYS
4. CONNECTORS SHOWN AS VIEWED FROM WIRING SIDE.
5. CAPACITOR C-201 P/O K-8582-A DUMMY OSC. DECK.
6. Ca THIS SYMBOL INDICATES NEUTRALIZING CAPACITY INHERENT BY MECHANICAL ASSEMBLY.
7. GROUND CONNECTION USED ONLY FOR ONE FREQ. XMTR (PA-8665-B). GROUND MUST BE REMOVED WHEN TWO OR MORE FREQ. ARE USED.
8. 12AX7 MAY BE REPLACED BY 12AT7.

● INDICATES COMPONENTS WHICH ARE PART OF P-8467 R.F. OUTPUT DECK.
♦ INDICATES COMPONENTS WHICH ARE PART OF K-8469 CHASSIS KIT.
ALL OTHER COMPONENTS ARE PART OF P-8430-A BASIC CHASSIS.
* INDICATES COMPONENTS WHICH ARE PART OF K-8652-A 12 V CONVERSION KIT.

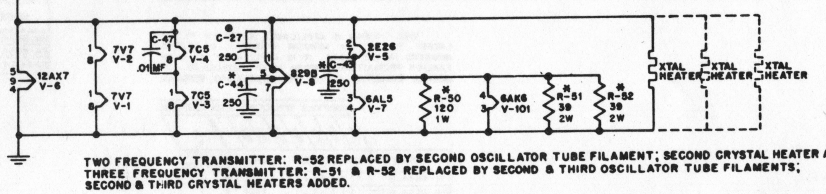

TWO FREQUENCY TRANSMITTER: R-52 REPLACED BY SECOND OSCILLATOR TUBE FILAMENT; SECOND CRYSTAL HEATER ADDED.
THREE FREQUENCY TRANSMITTER: R-51 & R-52 REPLACED BY SECOND & THIRD OSCILLATOR TUBE FILAMENTS; SECOND & THIRD CRYSTAL HEATERS ADDED.

PART NO. 63E802353
ISSUE-G 7/53-RS

144-174 MC "G" TRANSMITTER
SCHEMATIC DIAGRAM

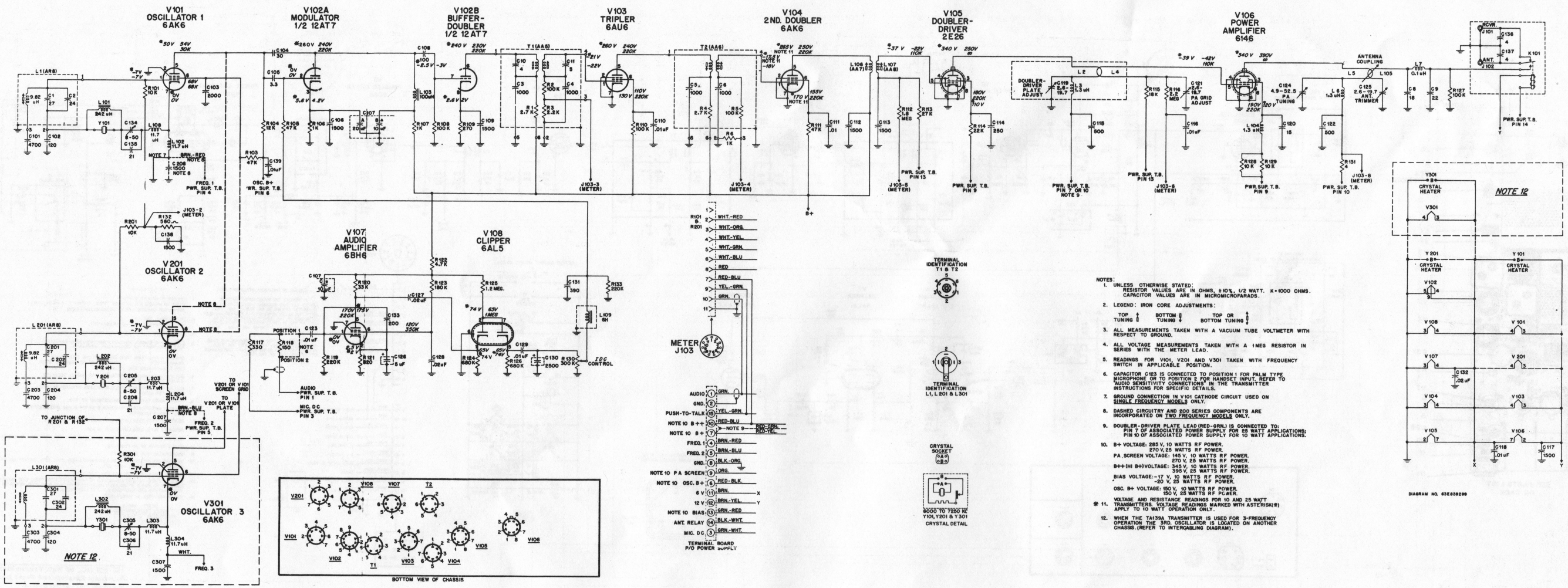

NOTES:

1. UNLESS OTHERWISE STATED:
   RESISTOR VALUES ARE IN OHMS, ±10%, 1/2 WATT. K=1000 OHMS.
   CAPACITOR VALUES ARE IN MICROMICROFARADS.
2. LEGEND: IRON CORE ADJUSTMENTS:
   TOP TUNING ↑ BOTTOM TUNING ↓ TOP OR BOTTOM TUNING ↕
3. ALL MEASUREMENTS TAKEN WITH A VACUUM TUBE VOLTMETER WITH RESPECT TO GROUND.
4. ALL VOLTAGE MEASUREMENTS TAKEN WITH A 1 MEG RESISTOR IN SERIES WITH THE METER LEAD.
5. READINGS FOR V101, V201 AND V301 TAKEN WITH FREQUENCY SWITCH IN APPLICABLE POSITION.
6. CAPACITOR C123 IS CONNECTED TO POSITION 1 FOR PALM TYPE MICROPHONE OR TO POSITION 2 FOR HANDSET INPUT. REFER TO "AUDIO SENSITIVITY CONNECTIONS" IN THE TRANSMITTER INSTRUCTIONS FOR SPECIFIC DETAILS.
7. GROUND CONNECTION IN V101 CATHODE CIRCUIT USED ON SINGLE FREQUENCY MODELS ONLY.
8. DASHED CIRCUITRY AND 800 SERIES COMPONENTS ARE INCORPORATED ON TWO FREQUENCY MODELS ONLY.
9. DOUBLER-DRIVER PLATE LEAD (RED-GRN.) IS CONNECTED TO:
   PIN 7 OF ASSOCIATED POWER SUPPLY FOR 25 WATT APPLICATIONS;
   PIN 10 OF ASSOCIATED POWER SUPPLY FOR 10 WATT APPLICATIONS.
10. B+ VOLTAGE: 285 V, 10 WATTS RF POWER.
    270 V, 25 WATTS RF POWER.
    PA SCREEN VOLTAGE: 145 V, 10 WATTS RF POWER.
    270 V, 25 WATTS RF POWER.
    B++ (HI B+) VOLTAGE: 345 V, 10 WATTS RF POWER.
    395 V, 25 WATTS RF POWER.
    BIAS VOLTAGE: -17 V, 10 WATTS RF POWER.
    -50 V, 25 WATTS RF POWER.
    OSC. B+ VOLTAGE: 150 V, 10 WATTS RF POWER.
    150 V, 25 WATTS RF POWER.
11. * VOLTAGE AND RESISTANCE READINGS FOR 10 AND 25 WATT TRANSMITTERS. VOLTAGE READINGS MARKED WITH ASTERISK(*) APPLY TO 10 WATT OPERATION ONLY.
12. WHEN THE TA139A TRANSMITTER IS USED FOR 3-FREQUENCY OPERATION THE 3RD. OSCILLATOR IS LOCATED ON ANOTHER CHASSIS. (REFER TO INTERCABLING DIAGRAM).

MOTOROLA
PART NO. 63E839289
ISSUE - F 1/57-CP

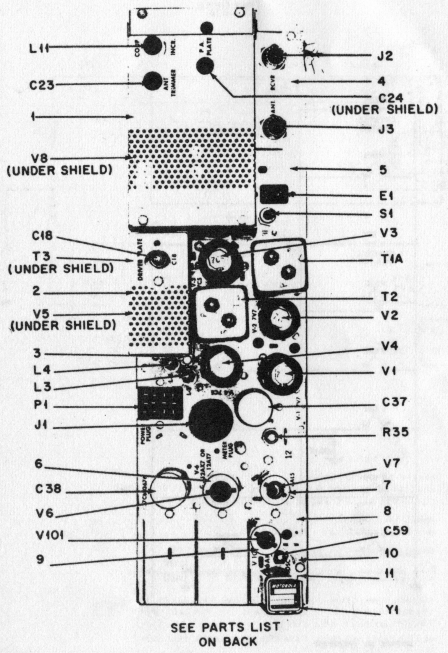

SEE PARTS LIST ON BACK

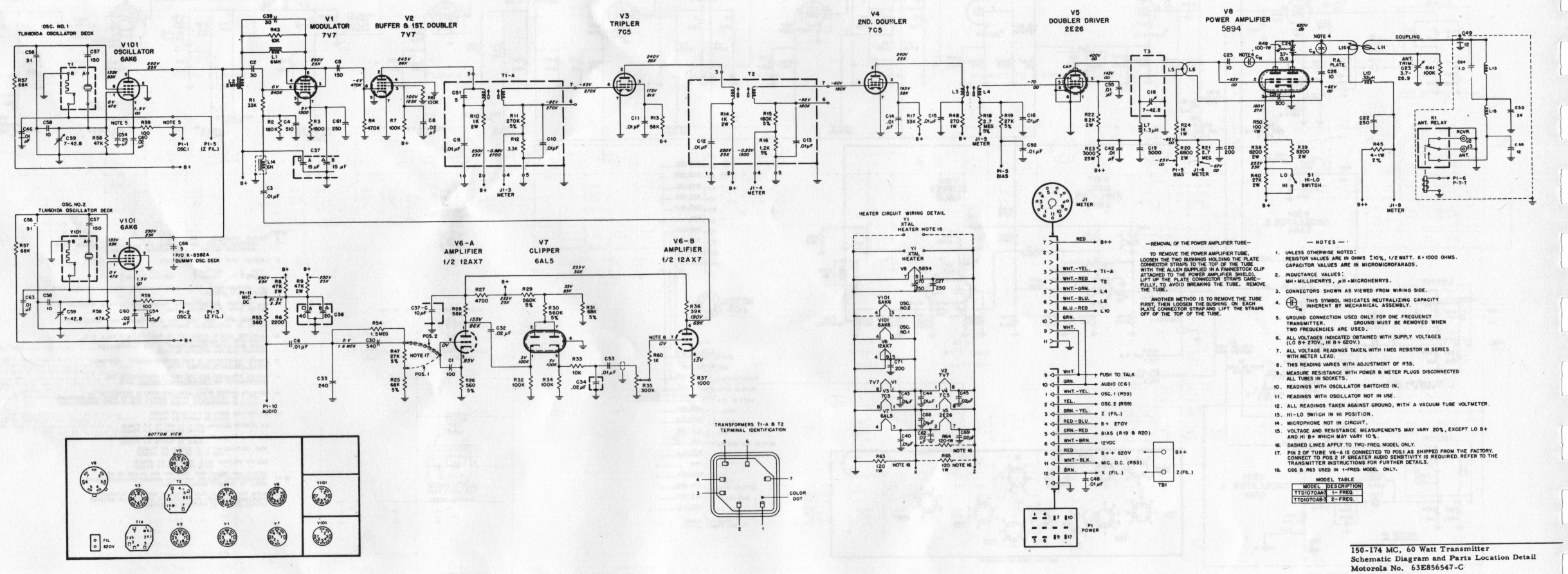

—REMOVAL OF THE POWER AMPLIFIER TUBE—

TO REMOVE THE POWER AMPLIFIER TUBE, LOOSEN THE TWO BUSHINGS HOLDING THE PLATE CONNECTOR STRAPS TO THE TOP OF THE TUBE WITH THE ALLEN SUPPLIED IN A FINGER STOCK CLIP ON THE SIDE OF THE POWER AMPLIFIER SHIELD. LIFT UP THE PLATE CONNECTOR STRAPS CAREFULLY, TO AVOID BREAKING THE TUBE. REMOVE THE TUBE.

ANOTHER METHOD IS TO REMOVE THE TUBE FIRST, THEN LOOSEN THE BUSHING ON EACH PLATE CONNECTOR STRAP AND LIFT THE STRAPS OFF OF THE TOP OF THE TUBE.

— NOTES —

1. UNLESS OTHERWISE NOTED: RESISTOR VALUES ARE IN OHMS ±10%, 1/2 WATT. K=1000 OHMS. CAPACITOR VALUES ARE IN MICROMICROFARADS.
2. INDUCTANCE VALUES: MH=MILLIHENRYS, μH=MICROHENRYS.
3. CONNECTORS SHOWN AS VIEWED FROM WIRING SIDE.
4. ⊕ THIS SYMBOL INDICATES NEUTRALIZING CAPACITY INHERENT BY MECHANICAL ASSEMBLY.
5. GROUND CONNECTION USED ONLY FOR ONE FREQUENCY TRANSMITTER. GROUND MUST BE REMOVED WHEN TWO FREQUENCIES ARE USED.
6. ALL VOLTAGES INDICATED OBTAINED WITH SUPPLY VOLTAGES (LO B+ 270V., HI B+ 620V.)
7. ALL VOLTAGE READINGS TAKEN WITH 1 MEG RESISTOR IN SERIES WITH METER LEAD.
8. THIS READING VARIES WITH ADJUSTMENT OF R35.
9. MEASURE RESISTANCE WITH POWER & METER PLUGS DISCONNECTED ALL TUBES IN SOCKETS.
10. READINGS WITH OSCILLATOR SWITCHED IN.
11. READINGS WITH OSCILLATOR NOT IN USE.
12. ALL READINGS TAKEN AGAINST GROUND, WITH A VACUUM TUBE VOLTMETER.
13. HI-LO SWITCH IN HI POSITION.
14. MICROPHONE NOT IN CIRCUIT.
15. VOLTAGE AND RESISTANCE MEASUREMENTS MAY VARY 20%, EXCEPT LO B+ AND HI B+ WHICH MAY VARY 10%.
16. DASHED LINES APPLY TO TWO-FREQ. MODEL ONLY.
17. PIN 7 OF TUBE V8-A IS CONNECTED TO POS.1 AS SHIPPED FROM THE FACTORY. CONNECT TO POS.2 IF GREATER AUDIO SENSITIVITY IS REQUIRED. REFER TO THE TRANSMITTER INSTRUCTIONS FOR FURTHER DETAILS.
18. C66 & R63 USED IN 1-FREQ. MODEL ONLY.

MODEL TABLE

MODEL	DESCRIPTION
TTD1070AA	1- FREQ.
TTD1070AB	2- FREQ.

150-174 MC, 60 Watt Transmitter
Schematic Diagram and Parts Location Detail
Motorola No. 63E856547-C
4/24/59-RCS

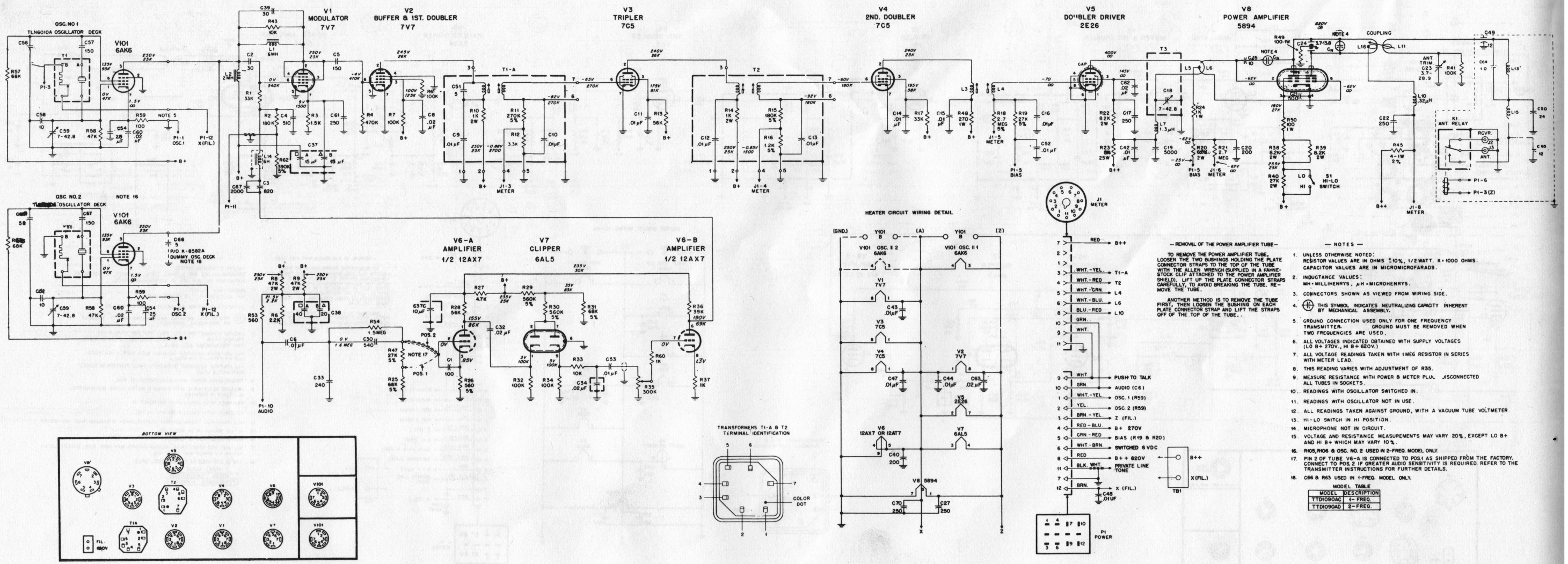

148-174 MC "Private-Line" Transmitter
Schematic Diagram
Motorola No. 63E856872-O
2/12/59-CP

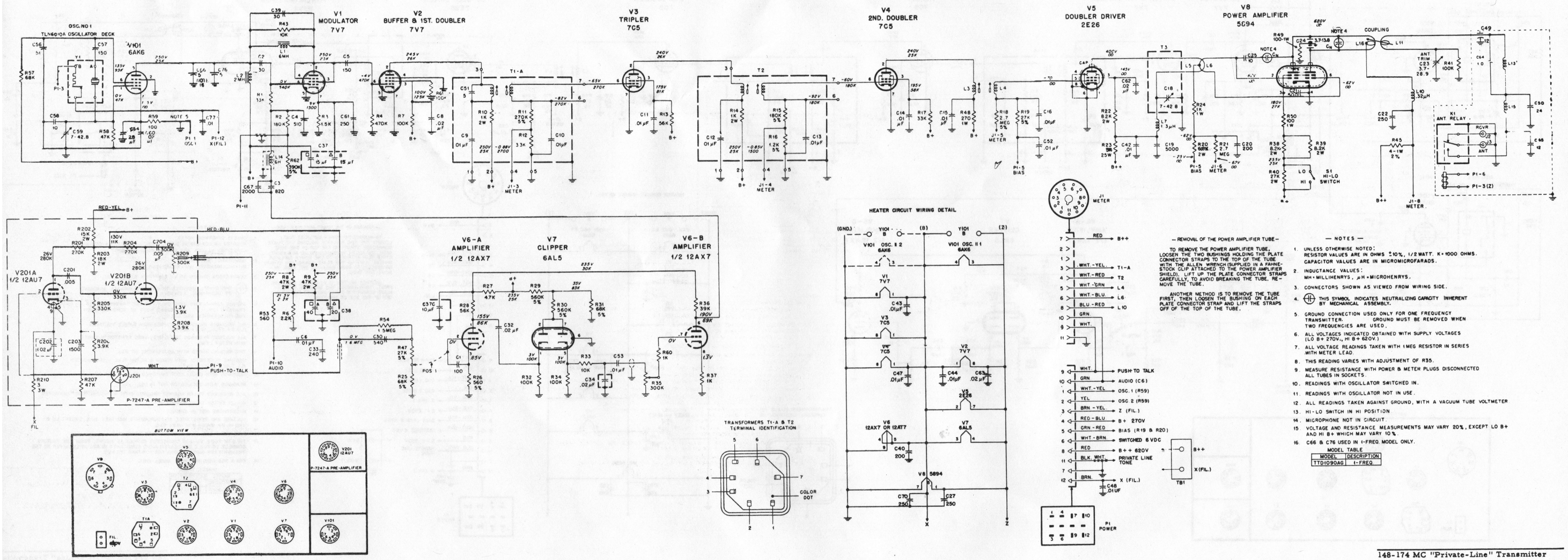

— REMOVAL OF THE POWER AMPLIFIER TUBE —

TO REMOVE THE POWER AMPLIFIER TUBE, LOOSEN THE TWO BUSHINGS HOLDING THE PLATE CONNECTOR STRAPS TO THE TOP OF THE TUBE WITH THE ALLEN WRENCH (SUPPLIED IN A FAHNESTOCK CLIP ATTACHED TO THE POWER AMPLIFIER SHIELD). LIFT UP THE PLATE CONNECTOR STRAPS CAREFULLY, TO AVOID BREAKING THE TUBE. REMOVE THE TUBE.

ANOTHER METHOD IS TO REMOVE THE TUBE FIRST, THEN LOOSEN THE BUSHING ON EACH PLATE CONNECTOR STRAP AND LIFT THE STRAPS OFF OF THE TOP OF THE TUBE.

— NOTES —

1. UNLESS OTHERWISE NOTED: RESISTOR VALUES ARE IN OHMS ±10%, 1/2 WATT. K = 1000 OHMS. CAPACITOR VALUES ARE IN MICROMICROFARADS.
2. INDUCTANCE VALUES: MH = MILLIHENRYS, μH = MICROHENRYS.
3. CONNECTORS SHOWN AS VIEWED FROM WIRING SIDE.
4. ⊕ THIS SYMBOL INDICATES NEUTRALIZING CAPACITY INHERENT BY MECHANICAL ASSEMBLY.
5. GROUND CONNECTION USED ONLY FOR ONE FREQUENCY TRANSMITTER. GROUND MUST BE REMOVED WHEN TWO FREQUENCIES ARE USED.
6. ALL VOLTAGES INDICATED OBTAINED WITH SUPPLY VOLTAGES (LO B+ 270V., HI B+ 620V.)
7. ALL VOLTAGE READINGS TAKEN WITH 1 MEG RESISTOR IN SERIES WITH METER LEAD.
8. THIS READING VARIES WITH ADJUSTMENT OF R35.
9. MEASURE RESISTANCE WITH POWER & METER PLUGS DISCONNECTED ALL TUBES IN SOCKETS.
10. READINGS WITH OSCILLATOR SWITCHED IN.
11. READINGS WITH OSCILLATOR NOT IN USE.
12. ALL READINGS TAKEN AGAINST GROUND, WITH A VACUUM TUBE VOLTMETER
13. HI-LO SWITCH IN HI POSITION
14. MICROPHONE NOT IN CIRCUIT.
15. VOLTAGE AND RESISTANCE MEASUREMENTS MAY VARY 20%, EXCEPT LO B+ AND HI B+ WHICH MAY VARY 10%.
16. C66 & C76 USED IN 1-FREQ. MODEL ONLY.

MODEL TABLE

MODEL	DESCRIPTION
TTO1090A6	1-FREQ.

148-174 MC "Private-Line" Transmitter
With Preamplifier
Schematic Diagram
Motorola No. 63E856875-O
2/12/59-CP

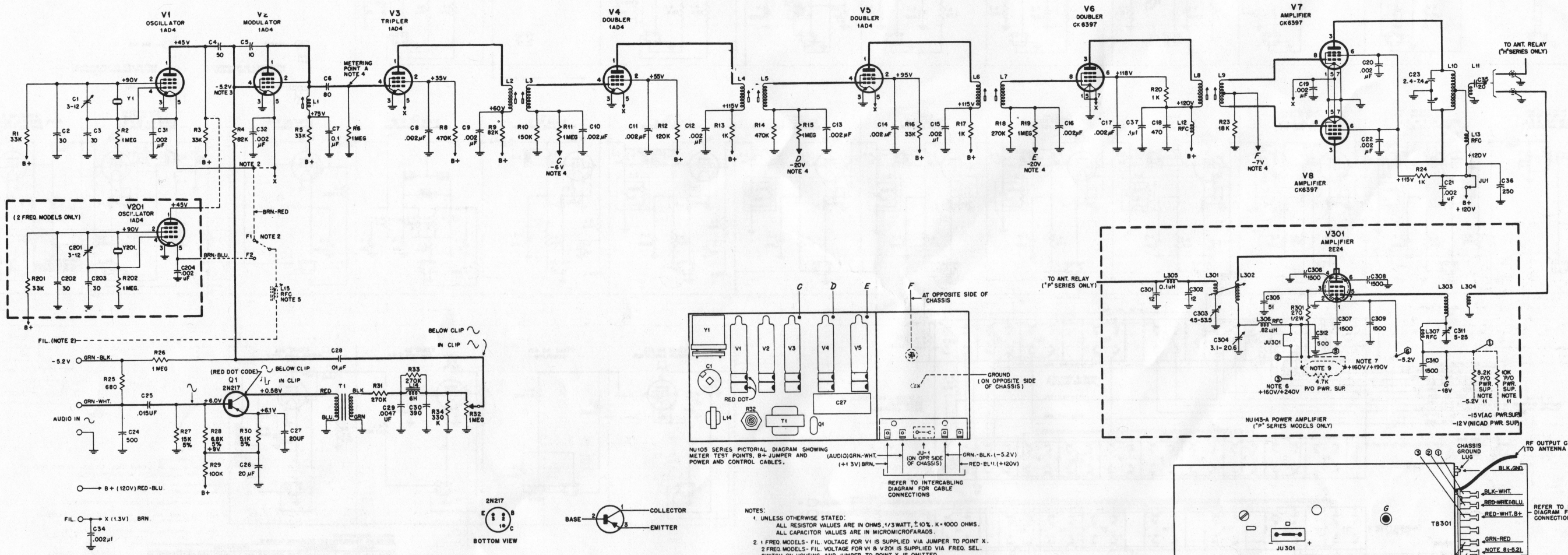

NU105 SERIES PICTORIAL DIAGRAM SHOWING METER TEST POINTS, B+ JUMPER AND POWER AND CONTROL CABLES.

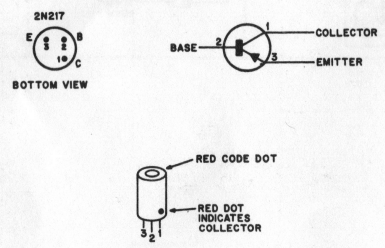

NOTES:

1. UNLESS OTHERWISE STATED:
   ALL RESISTOR VALUES ARE IN OHMS, 1/3 WATT, ±10%. K=1000 OHMS.
   ALL CAPACITOR VALUES ARE IN MICROMICROFARADS.
2. 1 FREQ MODELS- FIL VOLTAGE FOR V1 IS SUPPLIED VIA JUMPER TO POINT X.
   2 FREQ MODELS- FIL VOLTAGE FOR V1 & V201 IS SUPPLIED VIA FREQ. SEL. SWITCH ON HOUSING AND JUMPER TO POINT X IS OMITTED.
3. ALL VOLTAGE READINGS TAKEN AGAINST GROUND.
4. READINGS TAKEN WITH VTVM WITH 1 MEG RESISTOR IN SERIES WITH PROBE & ARE NOMINAL.
5. CHOKE L15 IS LOCATED IN TOP HOUSING AND IS USED ONLY IN TWO-FREQUENCY MODELS.
6. +160VDC WHEN USED WITH DRY BATTERY POWER SUPPLY.
   +240VDC WHEN USED WITH NICKEL-CADMIUM BATTERY AND 117VAC POWER SUPPLIES.
7. +190VDC WHEN USED WITH NICKEL-CADMIUM BATTERY AND 117VAC POWER SUPPLIES; +160V DC WITH DRY BATTERY SUPPLY.
8. "P" SERIES MODELS ONLY: ON ONE (1) SINGLE-FREQ. TRANSMITTER MODELS AND ON ONE (1) TWO-FREQ. TRANSMITTER MODELS, FILAMENT LEAD IS GRN.-BRN.
   ON TWO (2) SINGLE-FREQ. TRANSMITTER MODELS, FILAMENT LEAD TO:
   #1 POWER AMPLIFIER IS BRN.-YEL.
   #2 POWER AMPLIFIER IS BRN.-GRN.
9. JUMPER CONNECTION IN DRY BATTERY POWER SUPPLIES
   RESISTOR CONNECTION IN NICKEL-CADMIUM BATTERY AND 117VAC POWER SUPPLIES.
10. ALL TIE POINTS MARKED WITH A HEXAGON ⬡ INDICATE POWER AND CONTROL CABLE CONNECTIONS TO NU143-A POWER AMPLIFIER CHASSIS.
11. 8.2K RESISTOR P/O DRY BATTERY POWER SUPPLY.
    10K RESISTOR P/O NICKEL-CADMIUM BATTERY AND 117VAC POWER SUPPLIES.

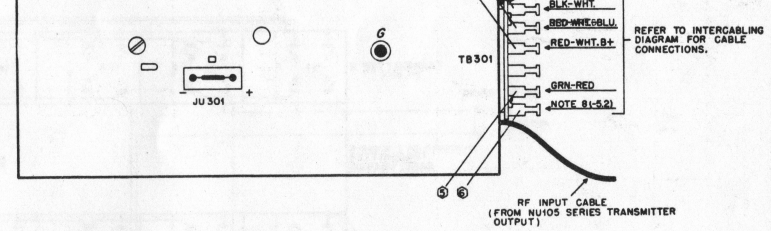

NU143-A PICTORIAL DETAIL SHOWING METERING POINT, B+ JUMPER AND POWER AND CONTROL CABLE CONNECTIONS.

DIAGRAM NO. 63E854926

NU105 Transmitter
W/NU143A Power Amplifier
Schematic Diagram
Motorola No. 63E854926-B
5/58-CP

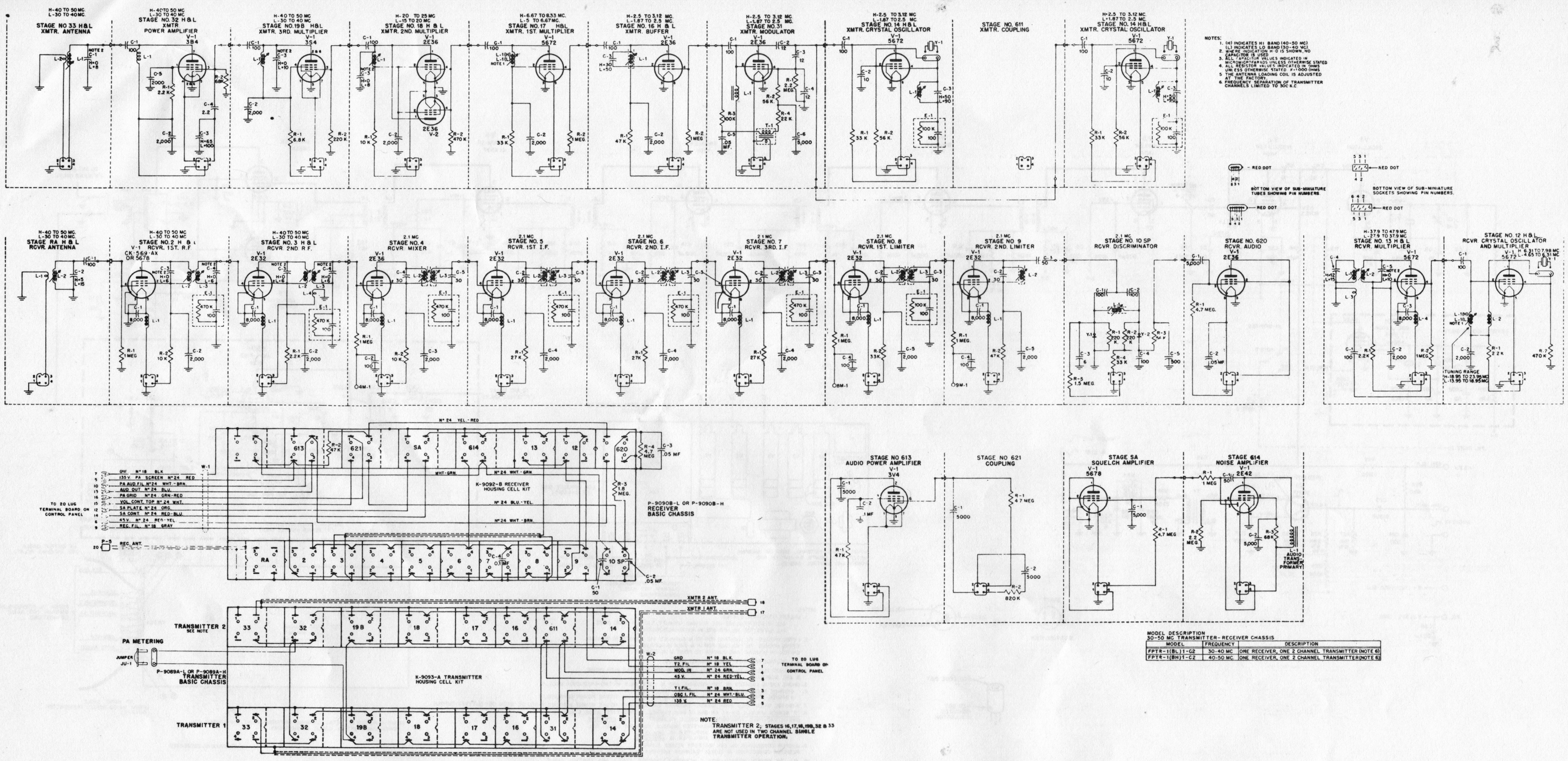

LOW BAND PACK SET

MOTOROLA SCHEMATIC DIAGRAM

SINGLE TWO FREQUENCY TRANSMITTER

SINGLE RECEIVER CHASSIS

PART NO. 63E802584

ISSUE-O 12/51-RS

152-174 MC. "HANDIE-TALKIE" FM RADIO PACK
TWO FREQUENCY TRANSMITTER MODELS
SCHEMATIC DIAGRAM

HIGH BAND PACK SET

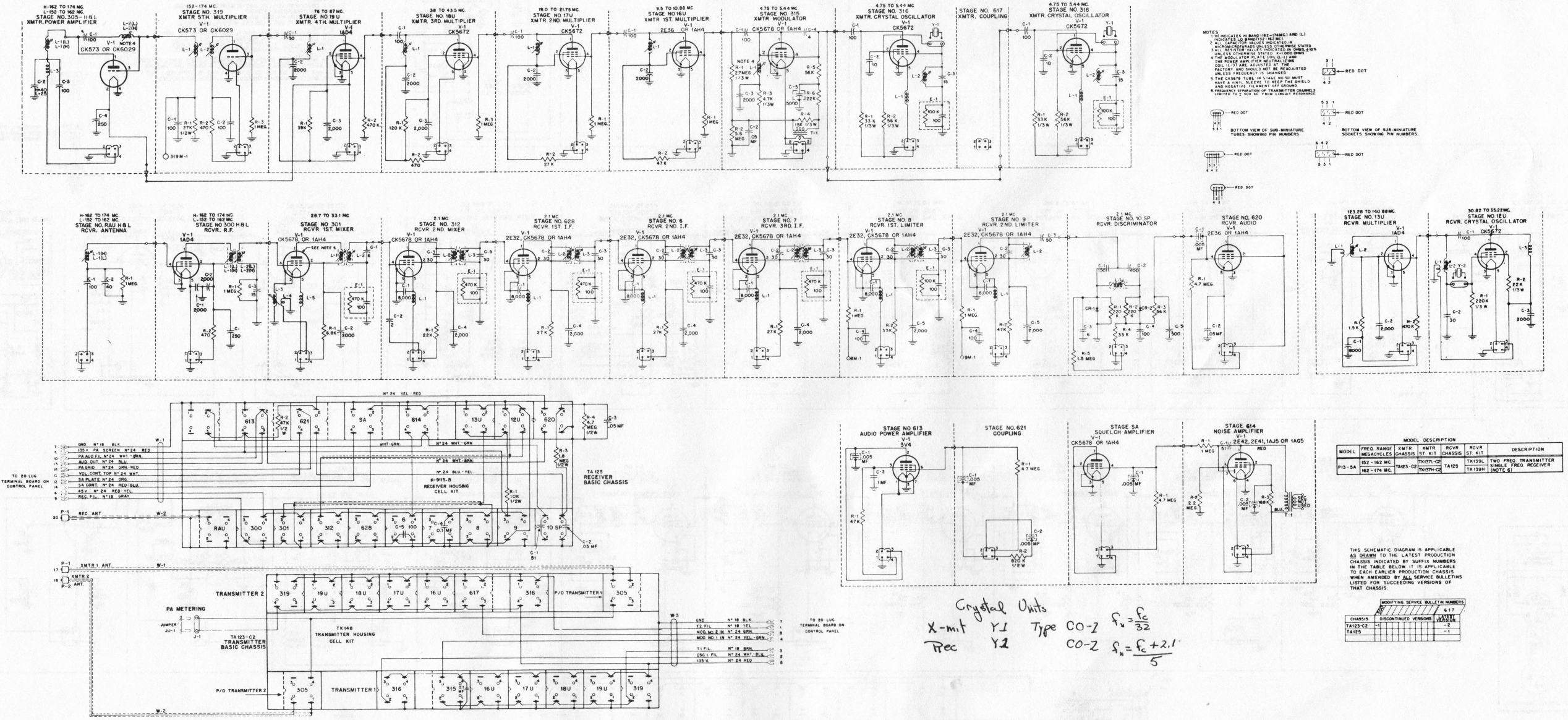

Crystal Units

X-mit Y1 Type CO-7 $f_x = \frac{f_c}{32}$

Rec Y2 CO-7 $f_x = \frac{f_c + 2.1}{5}$

MODEL DESCRIPTION

MODEL	FREQ. RANGE MEGACYCLES	XMTR CHASSIS	XMTR ST. KIT	RCVR CHASSIS	RCVR ST. KIT	DESCRIPTION
P13-5A	152 - 162 MC.	TA123-C2	TK137L-C2	TA125	TK139L	TWO FREQ. TRANSMITTER SINGLE FREQ RECEIVER
	162 - 174 MC.		TK137H-C2		TK139H	(NOTE 6)

THIS SCHEMATIC DIAGRAM IS APPLICABLE AS DRAWN TO THE LATEST PRODUCTION CHASSIS INDICATED BY SUFFIX NUMBERS IN THE TABLE BELOW. IT IS APPLICABLE TO EACH EARLIER PRODUCTION CHASSIS WHEN AMENDED BY ALL SERVICE BULLETINS LISTED FOR SUCCEEDING VERSIONS OF THAT CHASSIS.

| | MODIFYING SERVICE BULLETIN NUMBERS | | |

152-174 MC. "HANDIE-TALKIE" FM RADIOPHONE TWO FREQUENCY TRANSMITTER MODELS SCHEMATIC DIAGRAM

NOTES:
1. H INDICATES 152-174 MC. RANGE AND L INDICATES 152-162 MC. RANGE.
2. ALL CAPACITOR VALUES ARE IN MICROMICROFARADS UNLESS OTHERWISE STATED.
3. ALL RESISTOR VALUES ARE IN OHMS, ±10% AND ARE 1/5 OR 1/2 WATT UNLESS OTHERWISE STATED. K=1000.
4. THE MODULATOR PLATE COIL L1 OF STAGE NO.317 AND THE POWER AMPLIFIER NEUTRALIZING COIL L3 OF STAGE NO.1U ARE ADJUSTED AT THE FACTORY AND SHOULD NOT BE READJUSTED UNLESS FREQUENCY SHIFT OCCURS.
5. THE MIXER TUBE IN STAGE NO.3U MUST HAVE A VINYL SLEEVE TO KEEP THE SHIELD AND NEGATIVE FILAMENT OFF GROUND.
6. EITHER STAGE NO.622 OR STAGE NO.643 IS SUPPLIED. THEY ARE DIRECTLY INTERCHANGEABLE AS STAGE ASSEMBLIES.

5 PIN TUBE — RED DOT — 5 3 1

4 PIN TUBE — RED DOT — 4 3 1

BOTTOM VIEW OF SUB-MINIATURE TUBES SHOWING PIN NUMBERS

6 PIN TUBE — RED DOT — 6 5 3 1

H-152 TO 174 MC. L-152 TO 162 MC. STAGE NO.1U H & L XMTR. POWER AMPLIFIER — V1 CK573 OR CK6029

152 TO 174 MC. STAGE NO. 3I9 XMTR. 5TH. MULTIPLIER — V1 CK573 OR CK6029

76 TO 87 MC. STAGE NO.19U XMTR. 4TH. MULTIPLIER — V1 1AD4

38 TO 43.5 MC. STAGE NO.18U XMTR. 3RD. MULTIPLIER — V1 CK5672

19.0 TO 21.75 MC. STAGE NO.17U XMTR. 2ND. MULTIPLIER — V1 CK5672

9.5 TO 10.88 MC. STAGE NO.16U XMTR. 1ST. MULTIPLIER — V1 2E36 OR 1AH4

4.75 TO 5.44 MC. STAGE NO.317 XMTR. MODULATOR — V1 CK5678 OR 1AH4

4.75 TO 5.44 MC. STAGE NO.311 XMTR. CRYSTAL OSCILLATOR — V1 CK5672

123.28 TO 140.88 MC. STAGE NO.13U RCVR. MULT. PLIER — V1 1AD4

30.82 TO 35.22 MC. STAGE NO.12U RCVR. CRYSTAL OSCILLATOR — V1 CK5672

2.1 MC. STAGE NO. 643 (NOTE 6) RCVR. 2ND. LIMITER SQUELCH — V1 1AJ5, 1AG5, 2E41 OR 2E42

H-152 TO 174 MC. L-152 TO 162 MC. STAGE NO.2U H&L RCVR. R.F. — V1 1AD4

28.7 TO 33.1 MC. STAGE NO.3U RCVR 1ST MIXER — V1 CK5678 OR 1AH4

2.1 MC. STAGE NO. 312 RCVR. 2ND. MIXER — V1 CK5678 OR 1AH4

2.1 MC. STAGE NO. 628 RCVR. 1ST. I.F. — V1 2E32, CK5678 OR 1AH4

2.1 MC. STAGE NO. 6 RCVR. 2ND. I.F. — V1 2E32, CK5678 OR 1AH4

2.1 MC. STAGE NO. 7 RCVR. 3RD. I.F. — V1 2E32, CK5678 OR 1AH4

2.1 MC. STAGE NO. 8 RCVR. 1ST. LIMITER — V1 2E32, CK5678 OR 1AH4

2.1 MC. STAGE NO. 622 (NOTE 6) RCVR. 2ND. LIMITER SQUELCH — V1 2E42 OR 2E41

2.1 MC. STAGE NO.10A RCVR. DISCRIMINATOR SQUELCH

STAGE NO.11A RCVR. AUDIO SQUELCH — V1 2E36

P-278-L HANDSET

S1 CHANNEL SELECTOR SWITCH

S2 POWER SWITCH

J1 P.A. METER CONNECTOR — JUMPER J1 — ANTENNA CONNECTOR J2 — ANTENNA RELAY K1

K-8613-C2 HOUSING CELL KIT

T1 OUTPUT TRANSFORMER

J3 HANDSET CONNECTOR

MODEL DESCRIPTION
152-174 MC HANDIE-TALKIE FM RADIOPHONE

MODEL	TRANS.-REC. CHASSIS	FREQUENCY RANGE	STAGE KIT	DESCRIPTION
H13-6A	TA119-C2	152-162 MC	TK133L-C2	TWO FREQ. XMTR.-SINGLE FREQ. RCVR. DRY BATTERY PWR. SUPPLY
H13-7A	TA119-C2	162-174 MC	TK133H-C2	
		152-162 MC	TK133L-C2	TWO FREQ. XMTR.-SINGLE FREQ. RCVR. VIBRATOR PWR. SUPPLY
		162-174 MC	TK133H-C2	

Crystal Units

Y-1 CO-1 $f_x = \frac{f_c}{32}$

Y-2 CO-2 $f_x = \frac{f_c + 2.1}{5}$

DIAGRAM NO. 63E830642

THIS DIAGRAM IS APPLICABLE AS DRAWN TO THE LATEST PRODUCTION VERSION INDICATED BY SUFFIX NUMBERS IN THE TABLE. IT IS APPLICABLE TO EACH EARLIER PRODUCTION VERSION WHEN AMENDED BY ALL SERVICE BULLETINS LISTED FOR SUCCEEDING VERSIONS.

	MODIFYING SERVICE BULLETIN NUMBERS				
	372	500		617	
	DISCONTINUED VERSIONS			LATEST VERSION	
TA119-C2	-1	-2		-3	

MOTOROLA
PART NO. 63E830642
ISSUE - B 10/54-CP

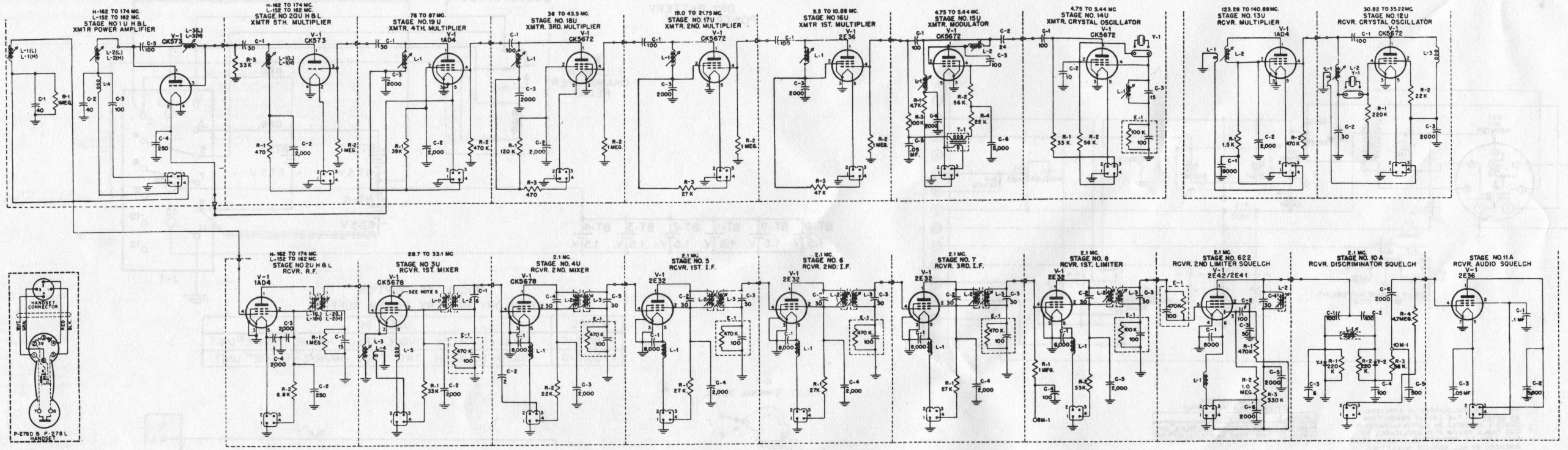

NOTES:

1. (H) INDICATES HI BAND, (162 - 174 MC.) AND (L) INDICATES LO BAND, (152 - 162 MC.).
2. ALL CAPACITOR VALUES ARE INDICATED IN MICROMICROFARADS UNLESS OTHERWISE SPECIFIED.
3. ALL RESISTOR VALUES ARE INDICATED IN OHMS UNLESS OTHERWISE SPECIFIED. K = 1,000 OHMS.
4. THE MODULATOR PLATE COIL L-2 OF STAGE NO. 15U AND THE POWER AMPLIFIER NEUTRALIZING COIL L-3 OF STAGE NO. 1 ARE ADJUSTED AT THE FACTORY AND SHOULD NOT BE READJUSTED UNLESS FREQUENCY IS CHANGED.
5. THE CK5678 TUBE IN STAGE NO. 3U MUST HAVE A VINYL SLEEVE TO KEEP THE SHIELD AND NEGATIVE FILAMENT OFF GROUND.
6. SWITCH S-1 IS A DPST TOGGLE SWITCH IN THE "D" SERIES AND TWO GANGED "HANG-UP" SWITCHES IN THE "E" SERIES.

BOTTOM VIEW OF SUB-MINIATURE TUBES SHOWING PIN NUMBERS.

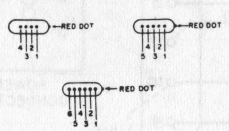

MODEL DESCRIPTION
152-174 MC "HANDIE-TALKIE" FM RADIOPHONE
SINGLE TRANSMITTER - SINGLE RECEIVER CHASSIS

MODEL	TRANS-REC. CHASSIS	FREQUENCY	DESCRIPTION
FHTRU-1DL	P-8610-DL	152-162 MC	DRY BAT. PWR. SUP. VARIABLE SQUELCH REG.
FHTRU-1DH	P-8610-DH	162-174 MC	DRY BAT. PWR. SUP. VARIABLE SQUELCH REG.
FHTRU-1V(DL)1	P-8610-DL	152-162 MC	VIBRATOR PWR. SUP. VARIABLE SQUELCH REG.
FHTRU-1V(DH)1	P-8610-DH	162-174 MC	VIBRATOR PWR. SUP. VARIABLE SQUELCH REG.
FHTRU-1EL	P-8610-EL	152-162 MC	SAME AS FHTRU-1DL WITH AUTO. ON-OFF
FHTRU-1V(EL)1	P-8610-EL	152-162 MC	SAME AS FHTRU-1V(DL)1 WITH AUTO. ON-OFF

THIS SCHEMATIC DIAGRAM IS APPLICABLE AS DRAWN TO THE LATEST PRODUCTION CHASSIS INDICATED BY SUFFIX NUMBERS IN THE TABLE BELOW. IT IS APPLICABLE TO EACH EARLIER PRODUCTION CHASSIS WHEN AMENDED BY ALL SERVICE BULLETINS LISTED FOR SUCCEEDING VERSIONS OF THAT CHASSIS.

	MODIFYING SERVICE BULLETIN NUMBERS											
CHASSIS	DISCONTINUED VERSIONS											LATEST VERSION
K-8610-D												
P-8613												-1

Crystal Unit

Tx Y1 CO2 $f_x = \frac{f_c + 2.1}{5}$

Rec Y1 CO3 $f_x = \frac{f_c}{32}$

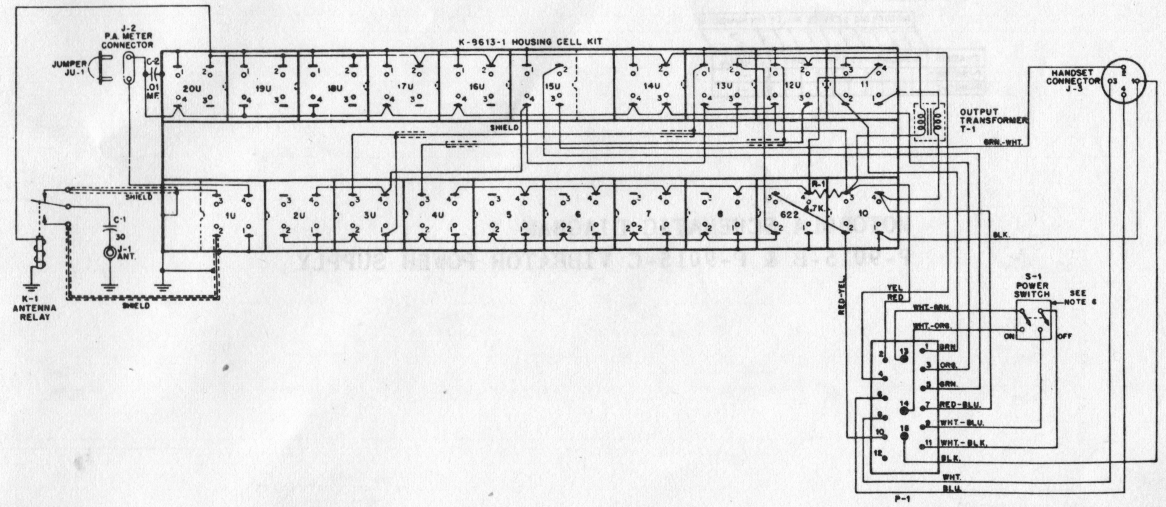

MOTOROLA SCHEMATIC DIAGRAM
152-174 MC. *HANDIE-TALKIE*® FM RADIOPHONE
SINGLE TRANSMITTER, SINGLE RECEIVER CHASSIS

PART NO. 63E810920
ISSUE-A 8/51-UM

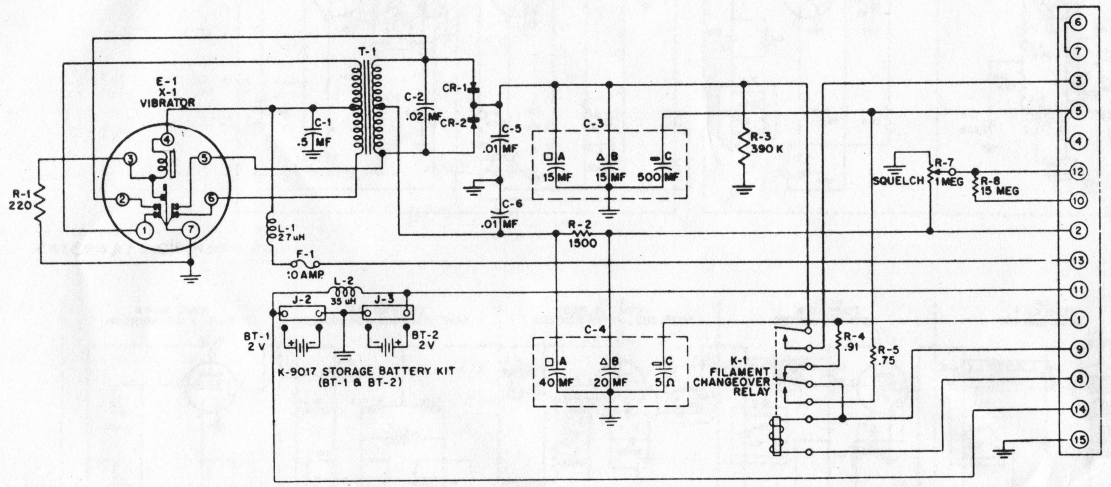

THIS SCHEMATIC DIAGRAM IS APPLICABLE AS DRAWN TO THE LATEST PRODUCTION CHASSIS INDICATED BY SUFFIX NUMBERS IN THE TABLE BELOW. IT IS APPLICABLE TO EACH EARLIER PRODUCTION CHASSIS WHEN AMENDED BY ALL SERVICE BULLETINS LISTED FOR SUCCEEDING VERSIONS OF THAT CHASSIS.

CHASSIS	MODIFYING SERVICE BULLETIN NUMBERS: DISCONTINUED VERSIONS	LATEST VERSION
P-9015B		-1
P-9015C		-1

MODEL DESCRIPTION
2 V VIBRATOR POWER SUPPLY

MODEL	USED IN
P-9015-B	SINGLE FREQ. HANDIE-TALKIE® UNIT
P-9015-C	TWO FREQ. HANDIE-TALKIE® UNIT

MOTOROLA SCHEMATIC DIAGRAM
P-9015-B & P-9015-C VIBRATOR POWER SUPPLY

DRY BATTERY
POWER SUPPLY

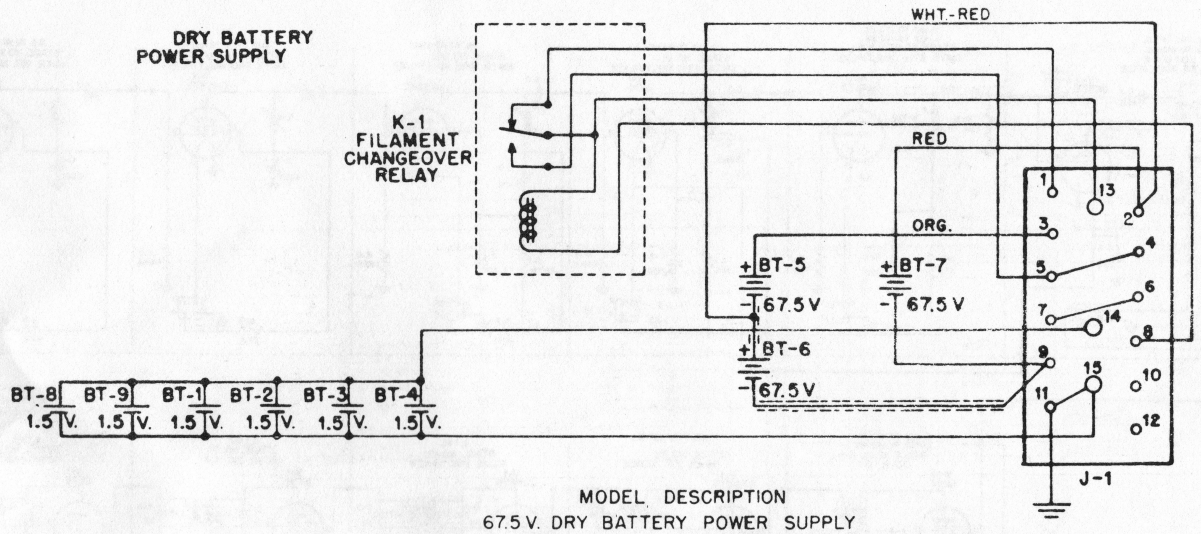

MODEL DESCRIPTION
67.5 V. DRY BATTERY POWER SUPPLY

MODEL	USED IN
P-8615-C	FIXED-SQUELCH SINGLE FREQ. HANDIE-TALKIE® UNIT
P-8615-D	FIXED-SQUELCH TWO FREQ. HANDIE-TALKIE® UNIT

K-1
RELAY TERMINAL DETAIL

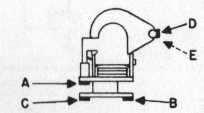

TOP VIEW
(59B892353)

NOTES:
1. R1 AND R2 OMITTED AND JU1 ADDED IN MODELS TU143 AND TU144.

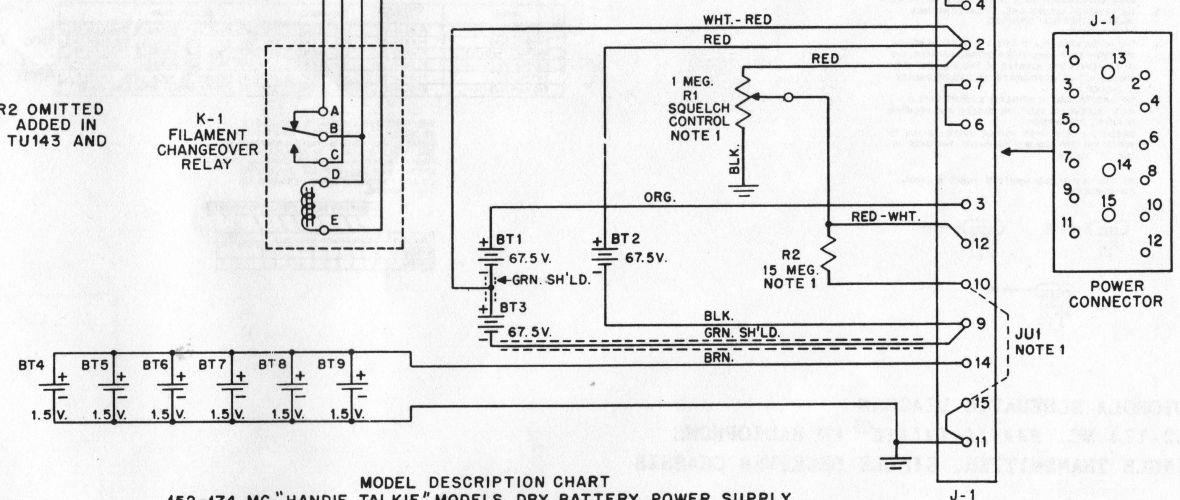

MODEL DESCRIPTION CHART
152-174 MC. "HANDIE TALKIE" MODELS, DRY BATTERY POWER SUPPLY

MODEL	USED IN
P-8615-G	SINGLE FREQUENCY XMTR. UNITS
P-8615-H	2 FREQ. XMTR OR 2-XMTR. UNITS
TU143	SINGLE FREQUENCY XMTR. UNITS-LESS SQUELCH CONTROL (NOTE 1)
TU144	2 FREQ. XMTR OR 2-XMTR. UNITS-LESS SQUELCH CONTROL (NOTE 1)

DRY BATTERY POWER SUPPLIES
SCHEMATIC DIAGRAM

MOTOROLA
PART NO. 63C802564
ISSUE - A 10/54-CP

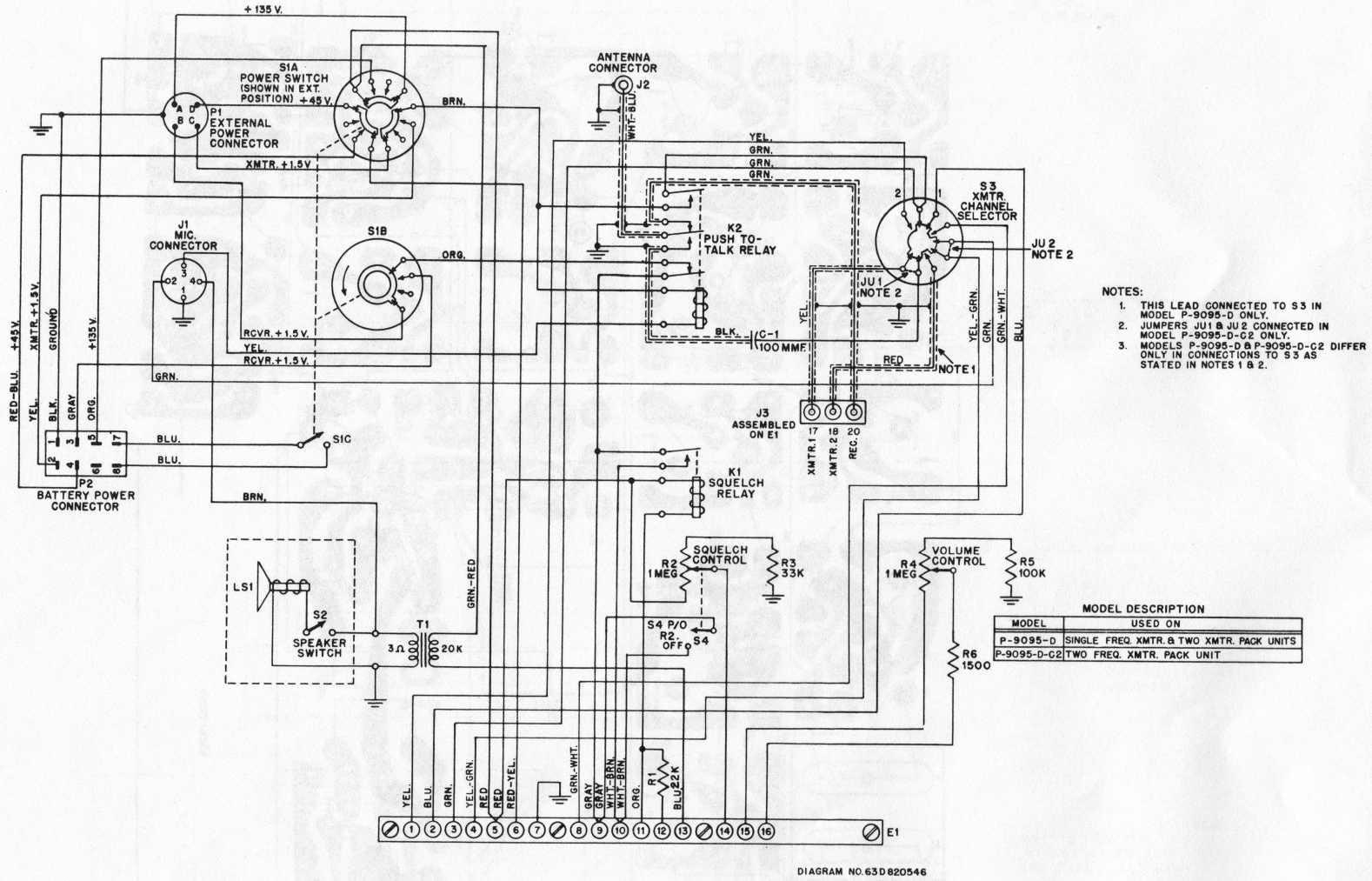

DIAGRAM NO. 63D820546

NOTES:
1. THIS LEAD CONNECTED TO S3 IN MODEL P-9095-D ONLY.
2. JUMPERS JU1 & JU2 CONNECTED IN MODEL P-9095-D-C2 ONLY.
3. MODELS P-9095-D & P-9095-D-C2 DIFFER ONLY IN CONNECTIONS TO S3 AS STATED IN NOTES 1 & 2.

MODEL DESCRIPTION

MODEL	USED ON
P-9095-D	SINGLE FREQ. XMTR. & TWO XMTR. PACK UNITS
P-9095-D-C2	TWO FREQ. XMTR. PACK UNIT

P-9095-D & P-9095-D-C2 CONTROL PANELS
SCHEMATIC DIAGRAM
FOR PACK SET

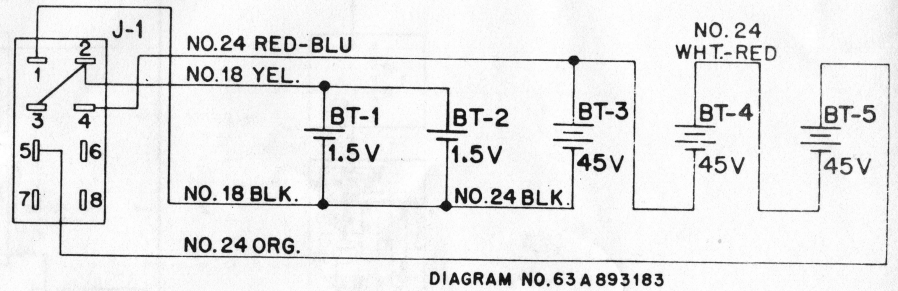

DIAGRAM NO. 63A893183

DRY BATTERY SUPPLY FOR HANDIE TALKIE

MOTOROLA SCHEMATIC DIAGRAM
P-9096 POWER SUPPLY

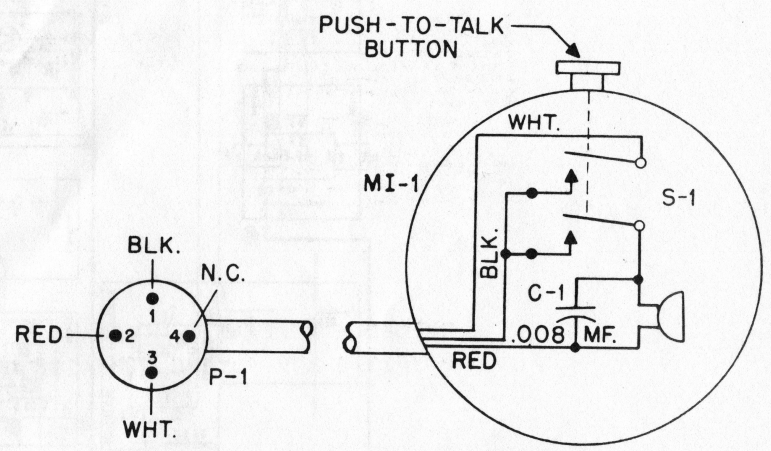

DIAGRAM NO. 63A802585

MOTOROLA SCHEMATIC DIAGRAM
P-9094 MICROPHONE FOR HANDIE TALKIE

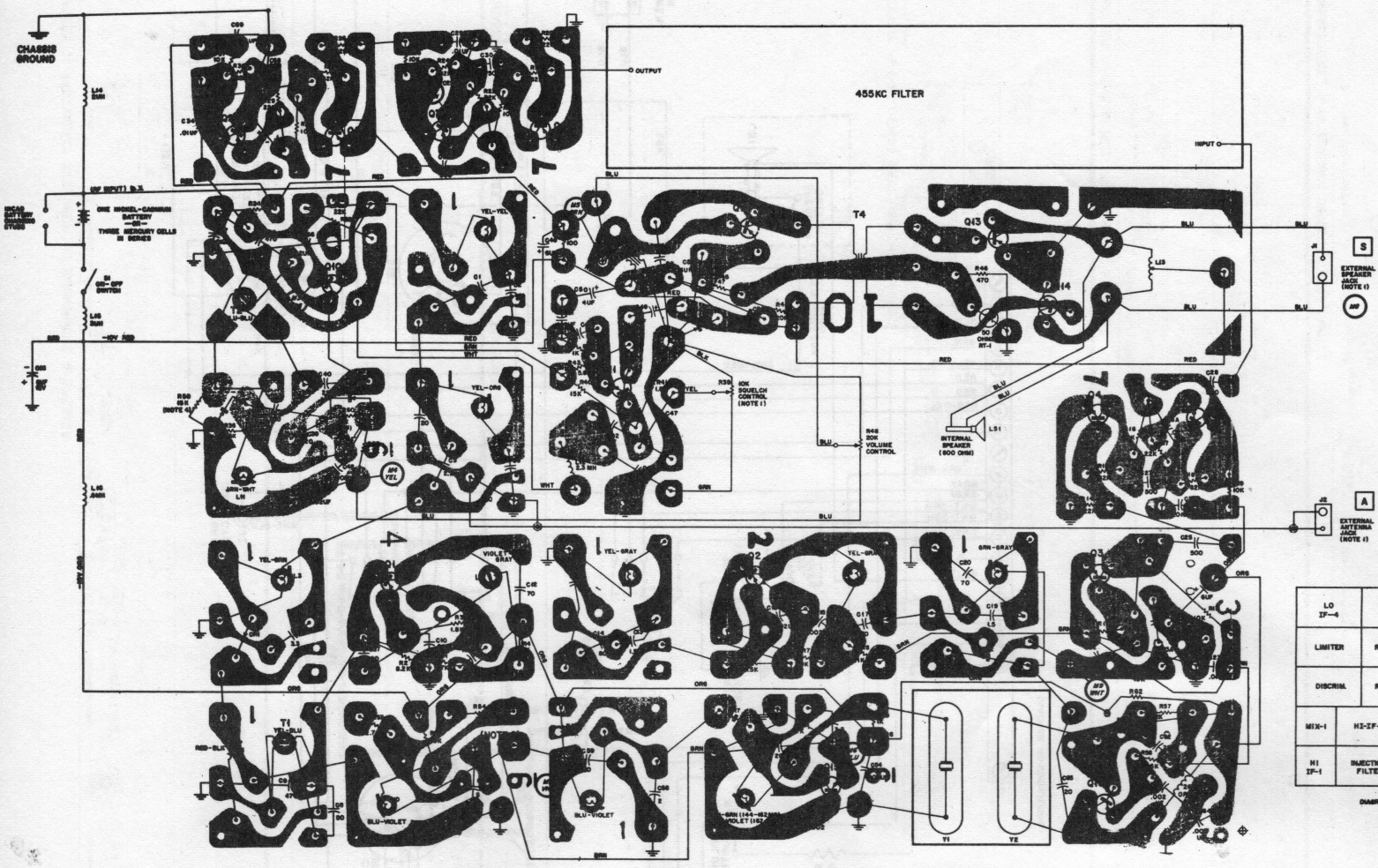

NOTES:

1. THESE COMPONENTS ARE LOCATED ON THE RECEIVER CASE.
2. THIS BRN. LEAD IS CONNECTED TO POINT (1), (2) OR (3) IN ORDER TO MATCH THE CURRENT DRAIN CHARACTERISTICS OF TRANSISTOR Q15.
3. UNLESS OTHERWISE STATED:
   RESISTOR VALUES ARE IN OHMS (K=1000).
   CAPACITOR VALUES ARE IN MICRO MICRO FARADS.
4. RESISTOR USED IN 60 KC CHANNEL MODELS ONLY.
5. DO NOT PLACE OHMMETER LEADS ON TRANSISTOR TERMINALS OR THE TRANSISTOR MAY BE DAMAGED.

LO IF-4	LO IF-3	IF-FILTER			
LIMITER	RF1	SQUELCH AND AUDIO			
DISCRIM.	RF2		SPEAKER		LO IF-2
MIX-1	HI-IF-2	HI IF-3	HI-IF-4	MIX-2	LO-IF-1
HI IF-1	INJECTION FILTER	MULT. FILTER	HI OSC./MULT.	XTAL	LO-OSC

DIAGRAM NO. 63E862173

144-174 MC FM Pocket Receiver
Printed Circuitry and Wiring Diagram
Motorola No. 63E862173-F

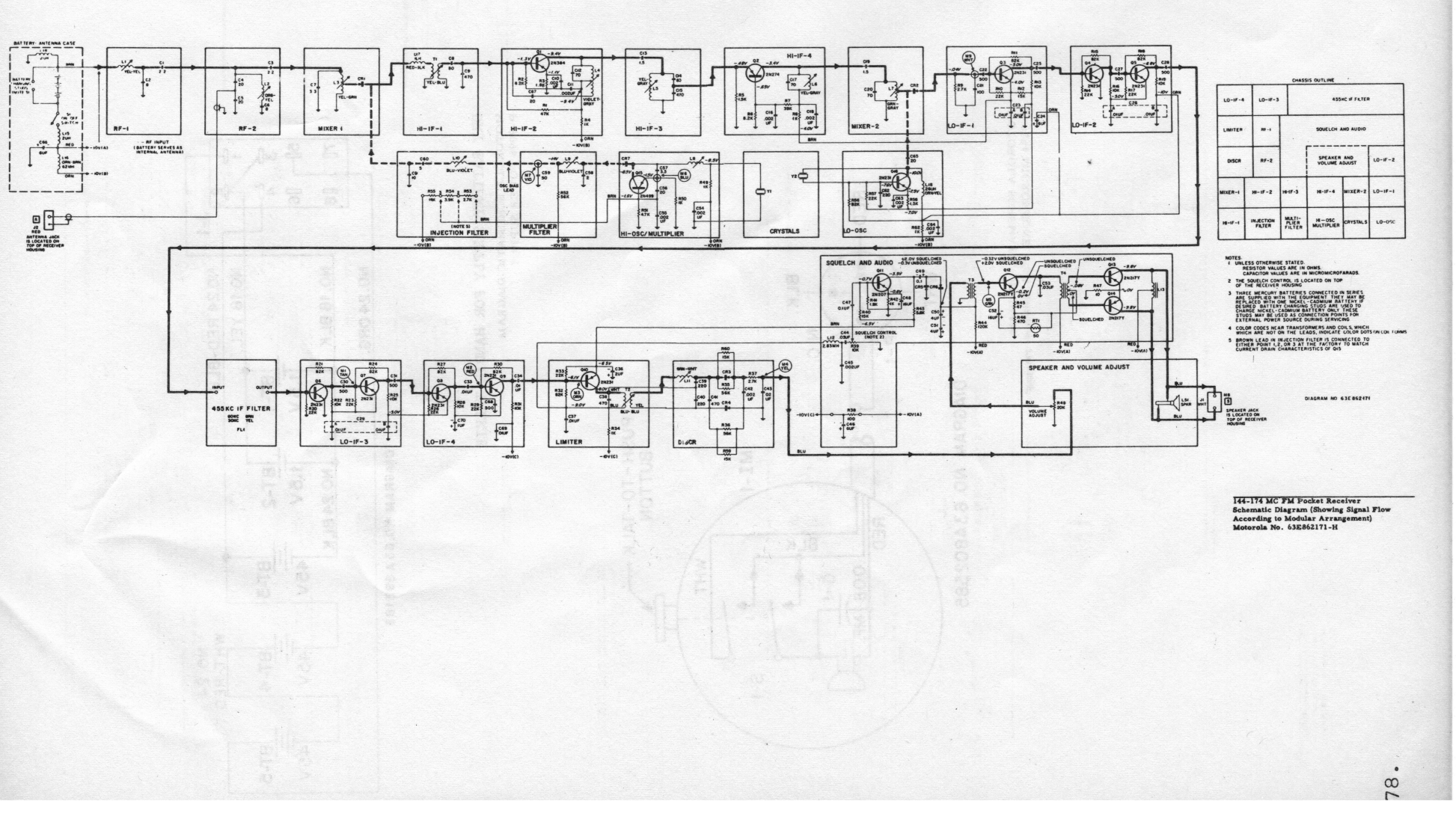

1. UNLESS OTHERWISE STATED.
   RESISTOR VALUES ARE IN OHMS.
   CAPACITOR VALUES ARE IN MICROMICROFARADS.
2. THE SQUELCH CONTROL IS LOCATED ON TOP OF THE RECEIVER HOUSING
3. THREE MERCURY BATTERIES CONNECTED IN SERIES ARE USED WITH THIS RECEIVER. THEY MAY BE REPLACED WITH ONE NICKEL-CADMIUM BATTERY IF DESIRED. BATTERY CHARGING STUDS ARE USED TO CHARGE NICKEL-CADMIUM BATTERY ONLY. THESE STUDS MAY BE USED AS CONNECTION POINTS FOR EXTERNAL POWER SOURCE DURING SERVICING
4. COLOR CODES NEAR TRANSFORMERS AND COILS, WHICH WHICH ARE NOT ON THE LEADS, INDICATE COLOR DOTS ON COIL FORMS
5. BROWN LEAD IN INJECTION FILTER IS CONNECTED TO EITHER POINT 1, 2, OR 3 AT THE FACTORY TO MATCH CURRENT DRAIN CHARACTERISTICS OF Q15

DIAGRAM NO 63E862171

144-174 MC FM Pocket Receiver
Schematic Diagram (Showing Signal Flow According to Modular Arrangement)
Motorola No. 63E862171-H

1-FREQUENCY TRANSMITTER; 1-FREQUENCY RECEIVER W/ MICROPHONE & SPEAKER

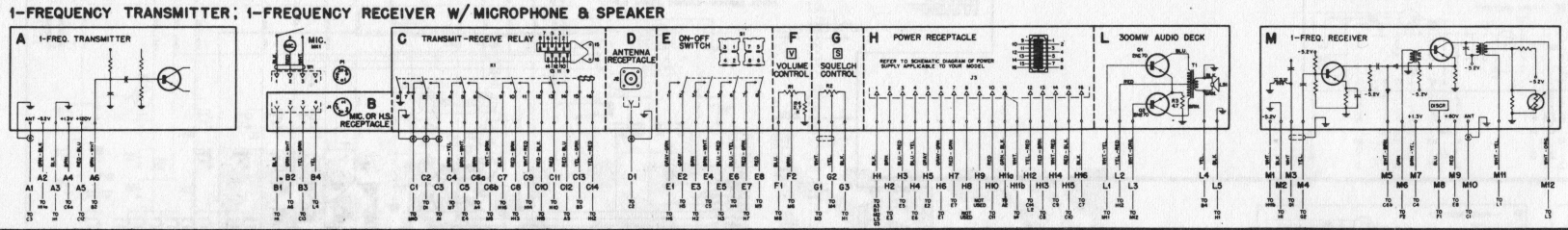

2-FREQUENCY TRANSMITTER; 1-FREQUENCY RECEIVER W/ MICROPHONE & SPEAKER

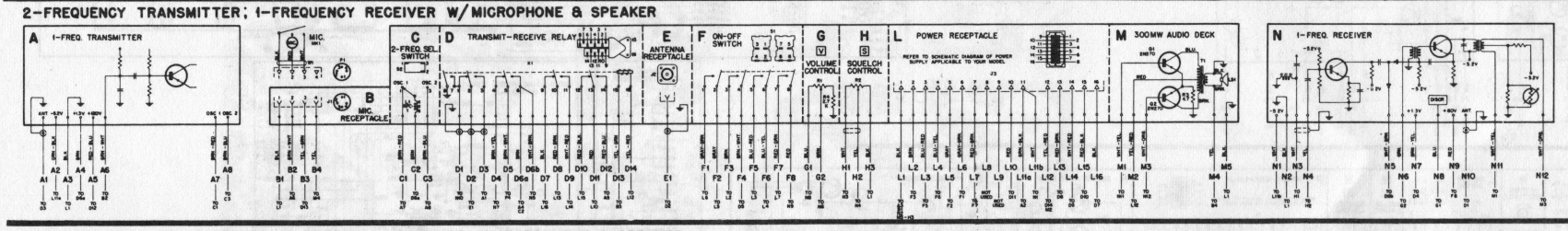

(2) 1-FREQUENCY TRANSMITTERS; 1-FREQUENCY RECEIVER W/ MICROPHONE & SPEAKER

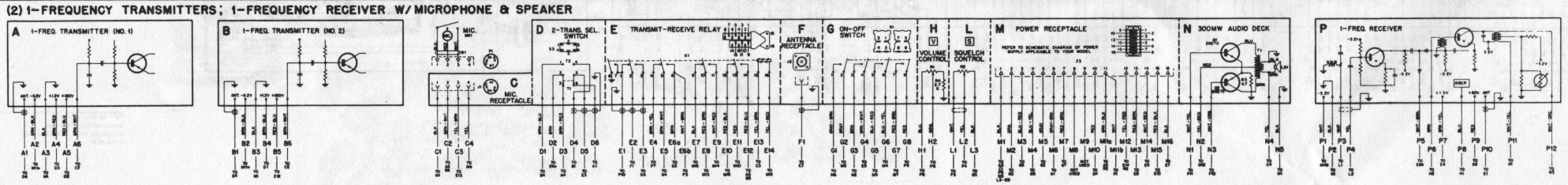

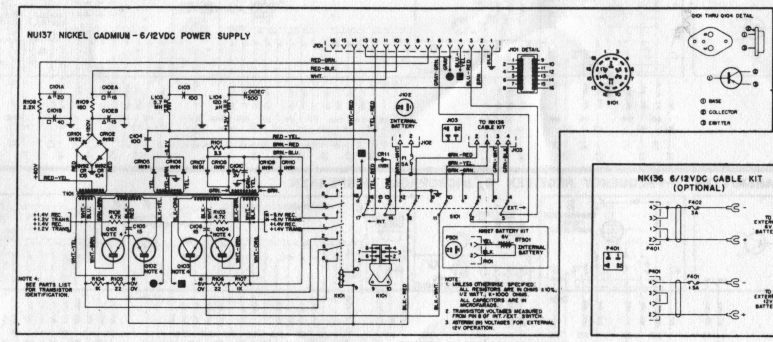

"H" Series Microphone & Speaker Models
Intercabling Diagram
Motorola No. 63E845742-N
5/58-CP

1-FREQUENCY TRANSMITTER; 1-FREQUENCY RECEIVER W/HANDSET

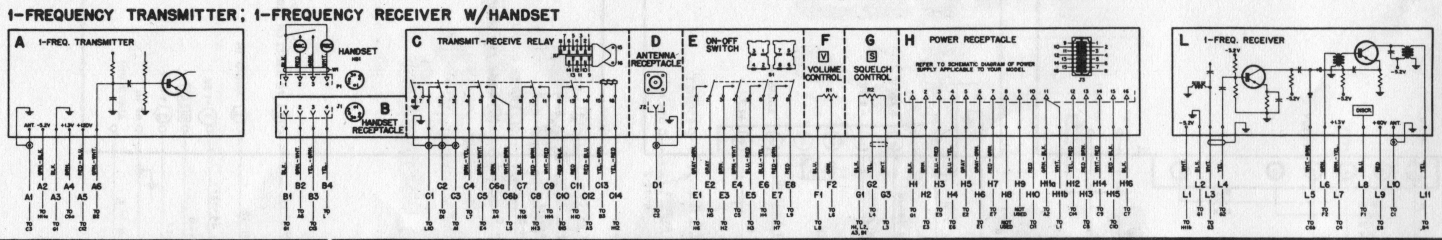

2-FREQUENCY TRANSMITTER; 1-FREQUENCY RECEIVER W/HANDSET

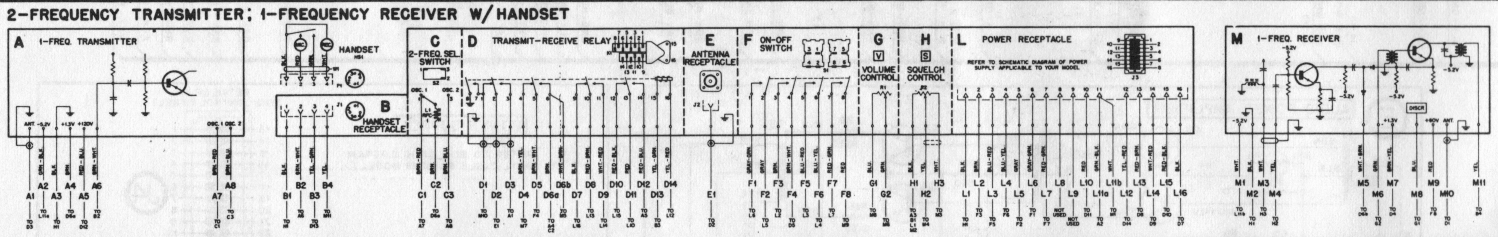

(2) 1-FREQUENCY TRANSMITTERS; 1-FREQUENCY RECEIVER W/ HANDSET

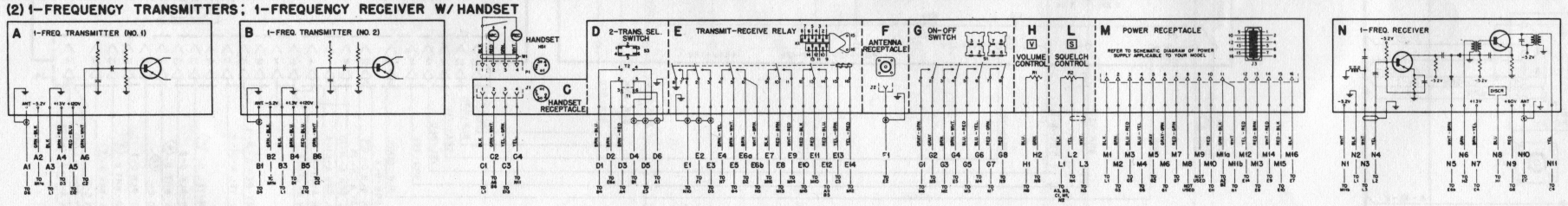

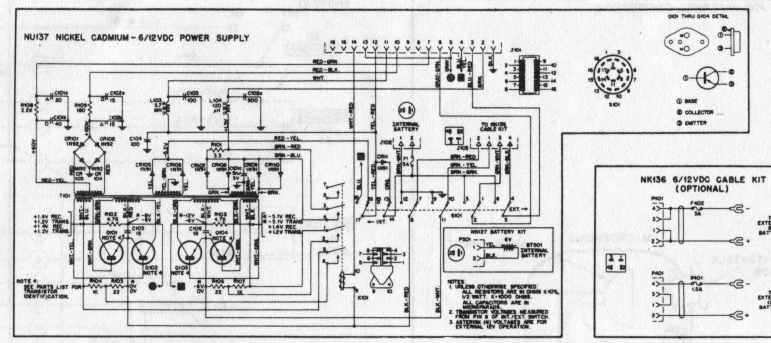

"H" Series Handset Models
Intercabling Diagram
Motorola No. 63E845741-J
5/58-CP

1-FREQUENCY TRANSMITTER; 1-FREQUENCY RECEIVER W/ MICROPHONE & SPEAKER

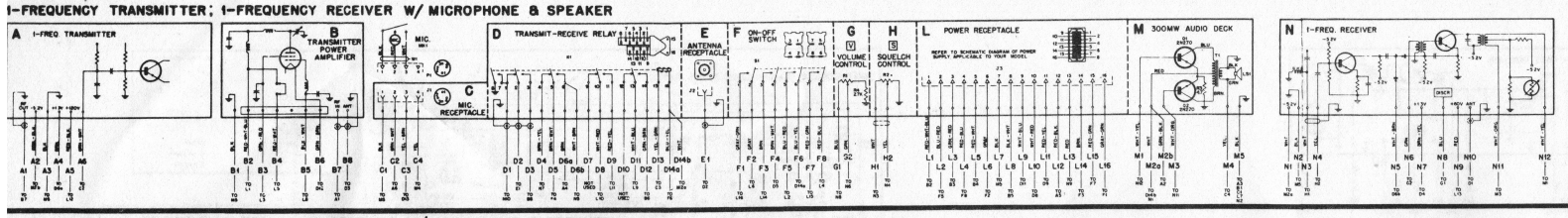

2-FREQUENCY TRANSMITTER; 1-FREQUENCY RECEIVER W/ MICROPHONE & SPEAKER

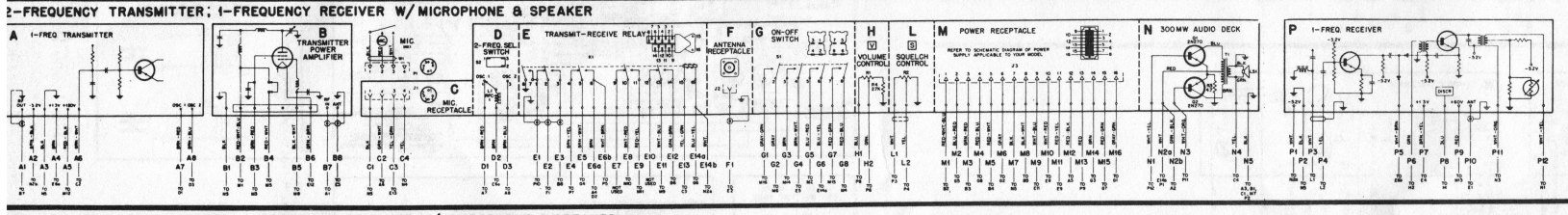

(2) 1-FREQUENCY TRANSMITTERS; 1-FREQUENCY RECEIVER W/ MICROPHONE & SPEAKER

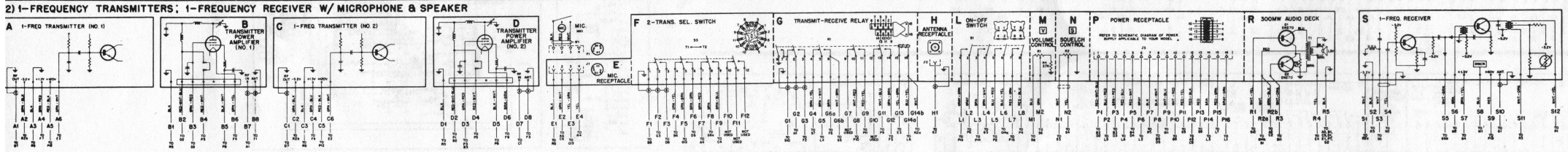

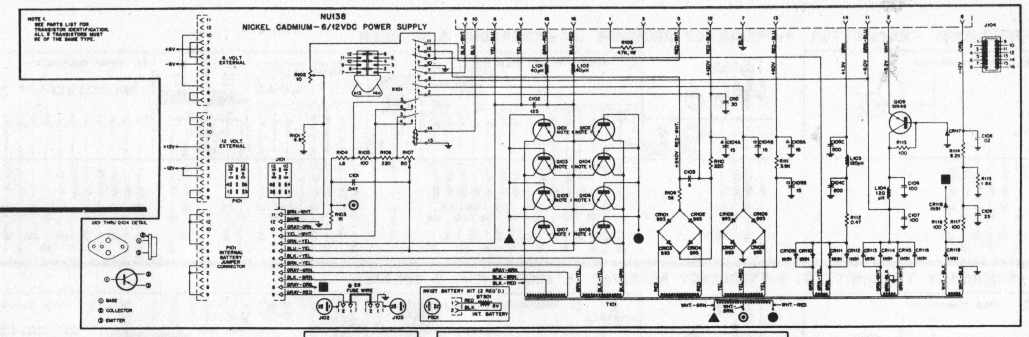

"P" Series Models
Intercabling Diagram
Motorola No. 63E845743-T
5/58-CP

NOTES:
1. TRUNK LEADS ARE LABELED AT EACH TERMINATION WITH THEIR COLOR CODE AND DESTINATIONS.
2. USED IN TWO FREQUENCY MODELS ONLY.
3. SEE SCHEMATIC DIAGRAM OF SPECIFIC CHASSIS FOR INTERNAL CONNECTIONS.

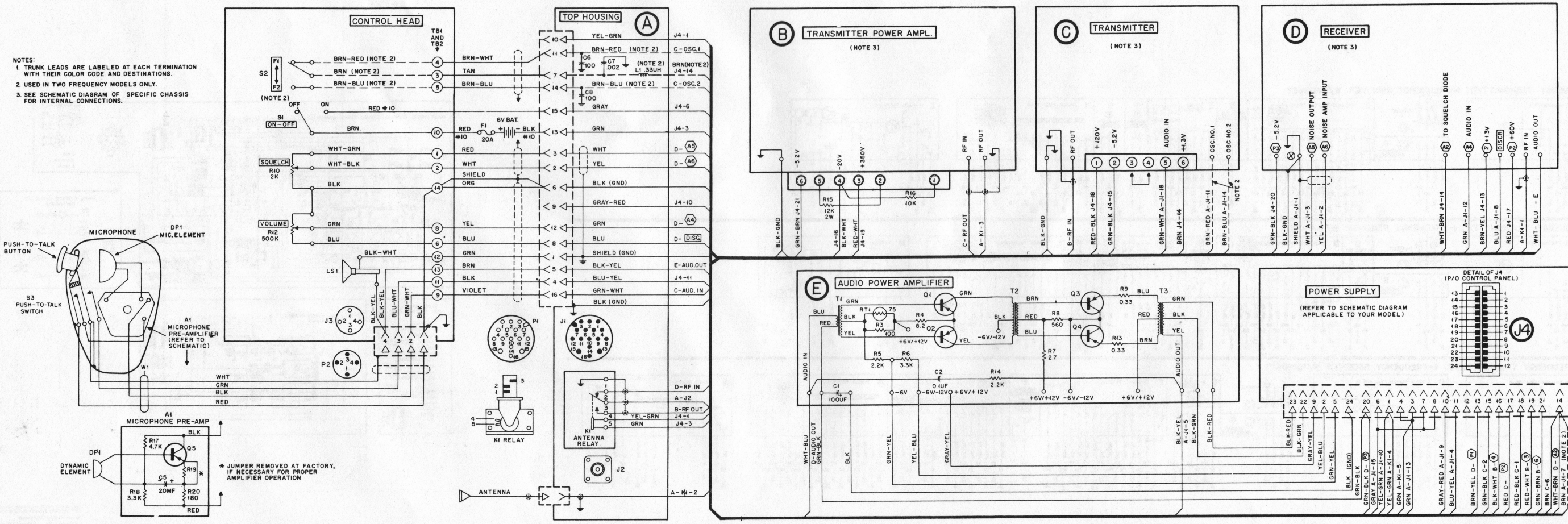

Remote Control High Power "Dispatcher"
Radiophone for Motorcycle Installations
Intercabling Diagram
Motorola No. 63E862016-O
11/58-CP

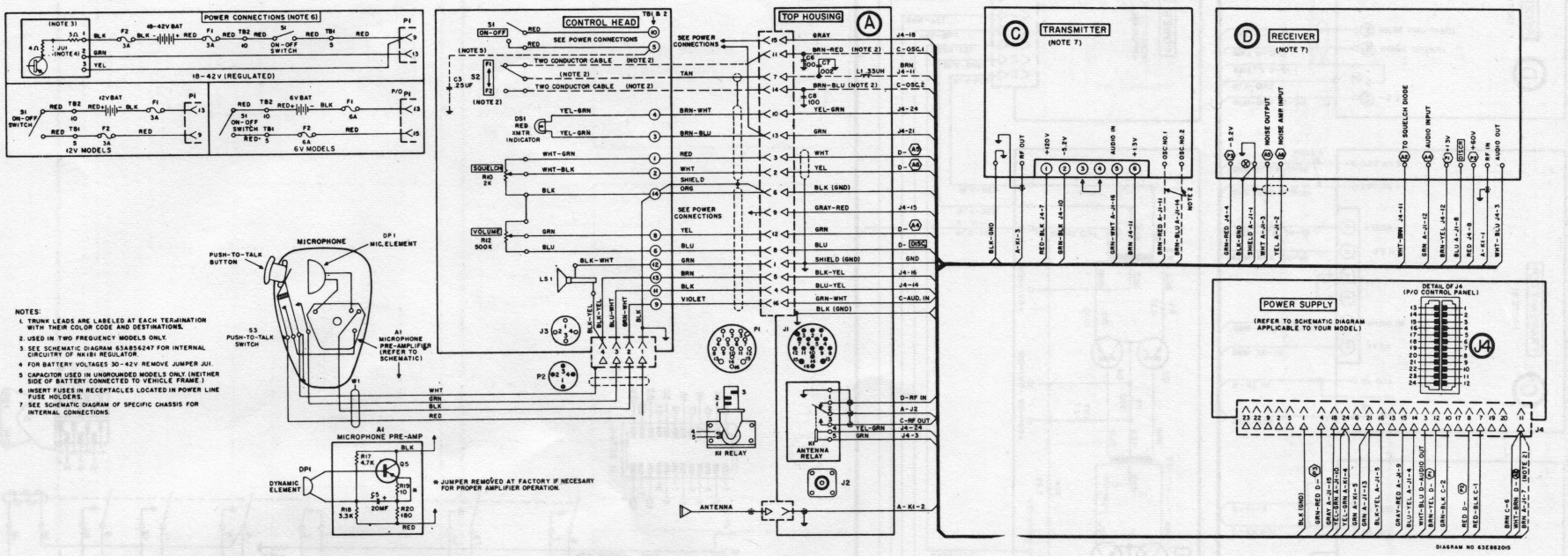

NOTES:
1. TRUNK LEADS ARE LABELED AT EACH TERMINATION WITH THEIR COLOR CODE AND DESTINATIONS.
2. USED IN TWO FREQUENCY MODELS ONLY.
3. SEE SCHEMATIC DIAGRAM 63A856247 FOR INTERNAL CIRCUITRY OF NKI81 REGULATOR.
4. FOR BATTERY VOLTAGES 30-42V REMOVE JUMPER JU1.
5. CAPACITOR USED IN UNGROUNDED MODELS ONLY (NEITHER SIDE OF BATTERY CONNECTED TO VEHICLE FRAME.)
6. INSERT FUSES IN RECEPTACLES LOCATED IN POWER LINE FUSE HOLDERS.
7. SEE SCHEMATIC DIAGRAM OF SPECIFIC CHASSIS FOR INTERNAL CONNECTIONS.

Remote Control Low Power "Dispatcher"
Radiophone for Industrial Installations
Intercabling Diagram
Motorola No. 63E862015-O
11/58-CP

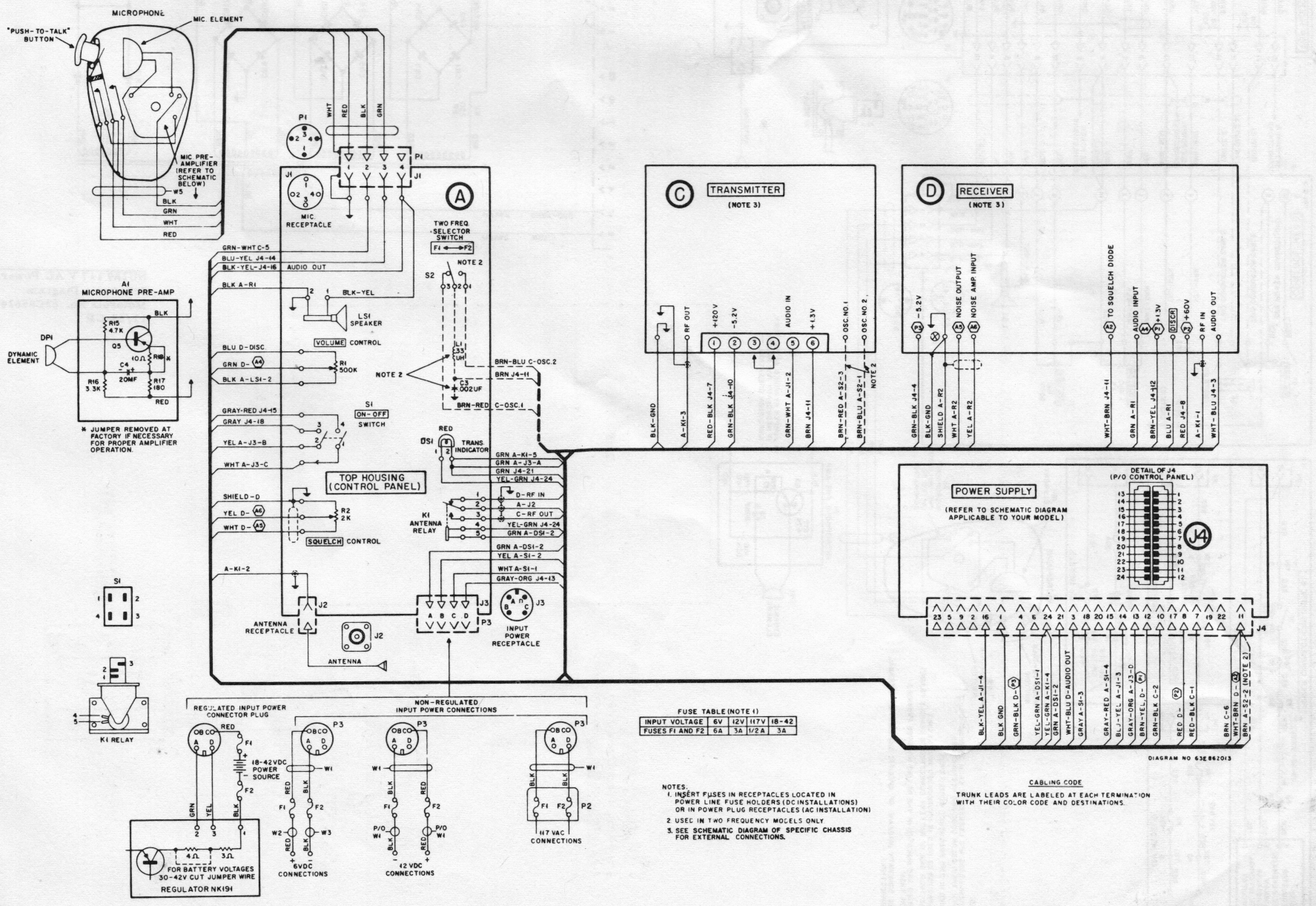

FUSE TABLE (NOTE 1)				
INPUT VOLTAGE	6V	12V	117V	18-42
FUSES F1 AND F2	6A	3A	1/2A	3A

NOTES:
1. INSERT FUSES IN RECEPTACLES LOCATED IN POWER LINE FUSE HOLDERS (DC INSTALLATIONS) OR IN POWER PLUG RECEPTACLES (AC INSTALLATION)
2. USED IN TWO FREQUENCY MODELS ONLY.
3. SEE SCHEMATIC DIAGRAM OF SPECIFIC CHASSIS FOR EXTERNAL CONNECTIONS.

CABLING CODE

TRUNK LEADS ARE LABELED AT EACH TERMINATION WITH THEIR COLOR CODE AND DESTINATIONS.

Local Control Low Power "Dispatcher"
Radiophone for Industrial Installations
Intercabling Diagram
Motorola No. 63E862013-O
11/58-CP

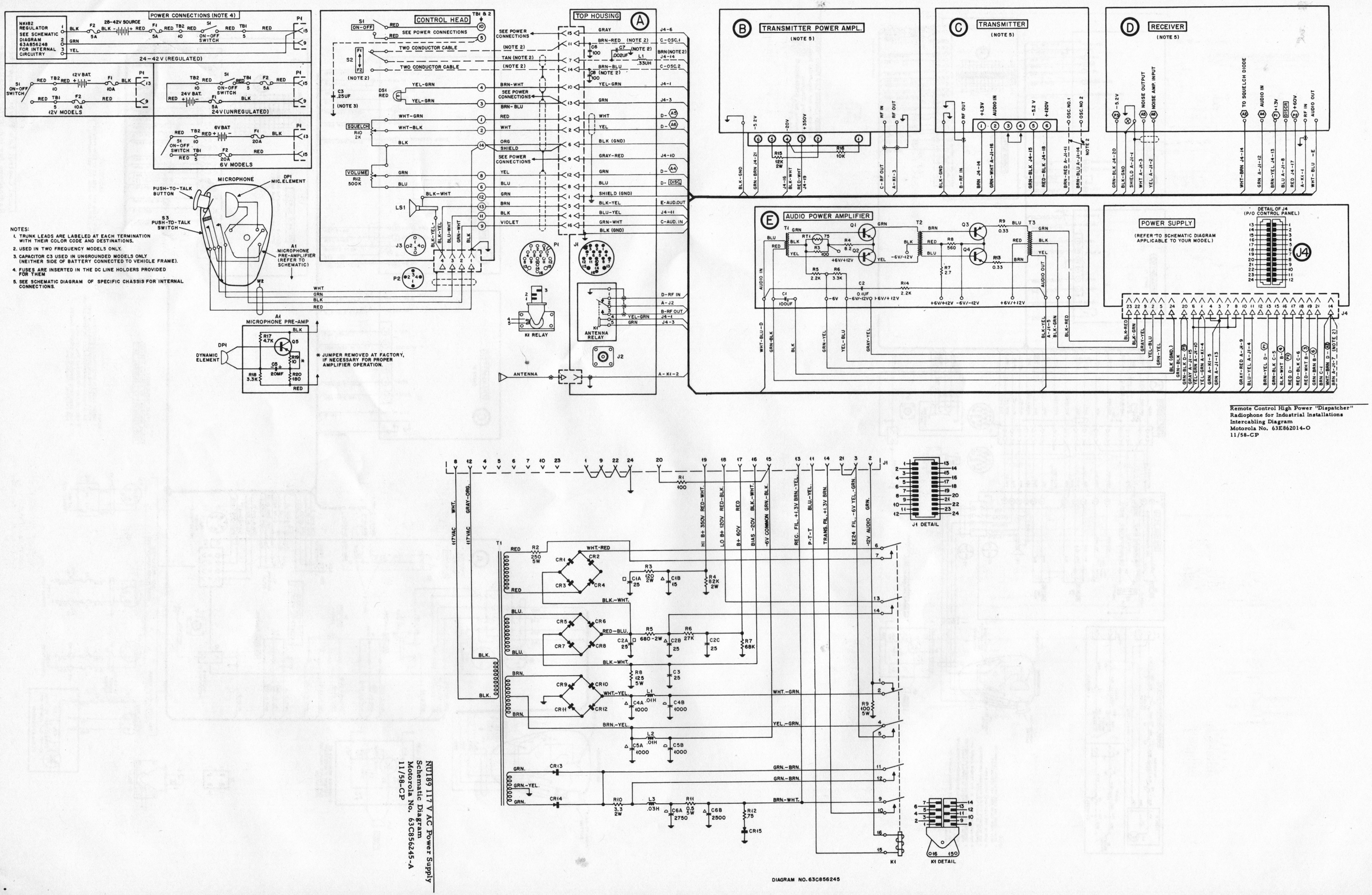

NOTES:

1. TRUNK LEADS ARE LABELED AT EACH TERMINATION WITH THEIR COLOR CODE AND DESTINATIONS.
2. USED IN TWO FREQUENCY MODELS ONLY.
3. CAPACITOR C3 USED IN UNGROUNDED MODELS ONLY. (NEITHER SIDE OF BATTERY CONNECTED TO VEHICLE FRAME).
4. FUSES ARE INSERTED IN THE DC LINE HOLDERS PROVIDED FOR THEM
5. SEE SCHEMATIC DIAGRAM OF SPECIFIC CHASSIS FOR INTERNAL CONNECTIONS.

Remote Control High Power "Dispatcher"
Radiophone for Industrial Installations
Intercabling Diagram
Motorola No. 63E862014-O
11/58-CP

NUT89 117 V AC Power Supply
Schematic Diagram
Motorola No. 63C856245-A
11/58-CP

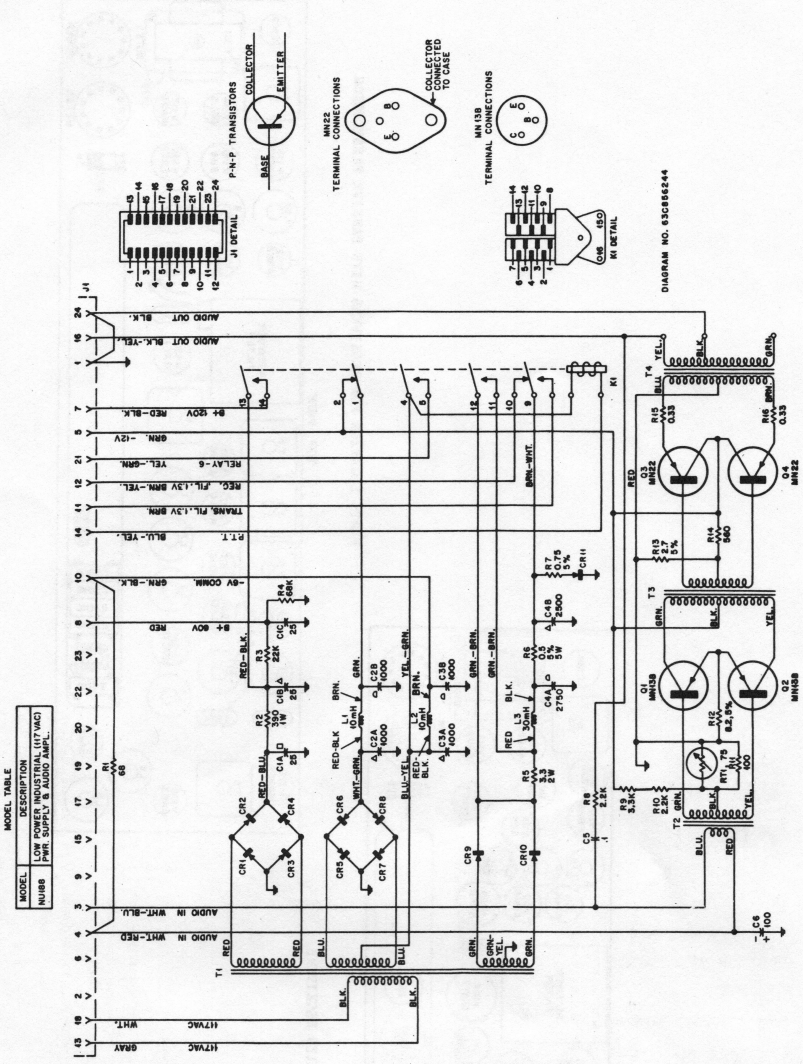

NU188 117 V AC Power Supply
Schematic Diagram
Motorola No. 63C856244-A
11/58-CP

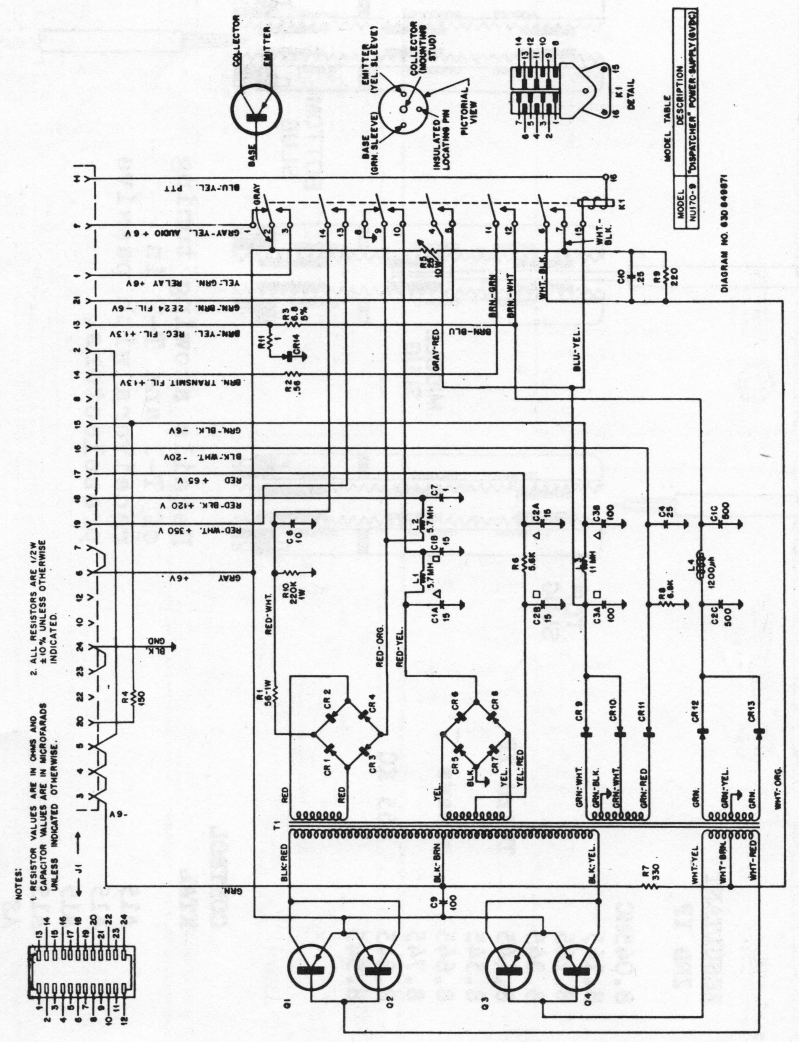

Model NU170
6 V DC Power Supply
Schematic Diagram
Motorola No. 63D849871-L
11/58-CP

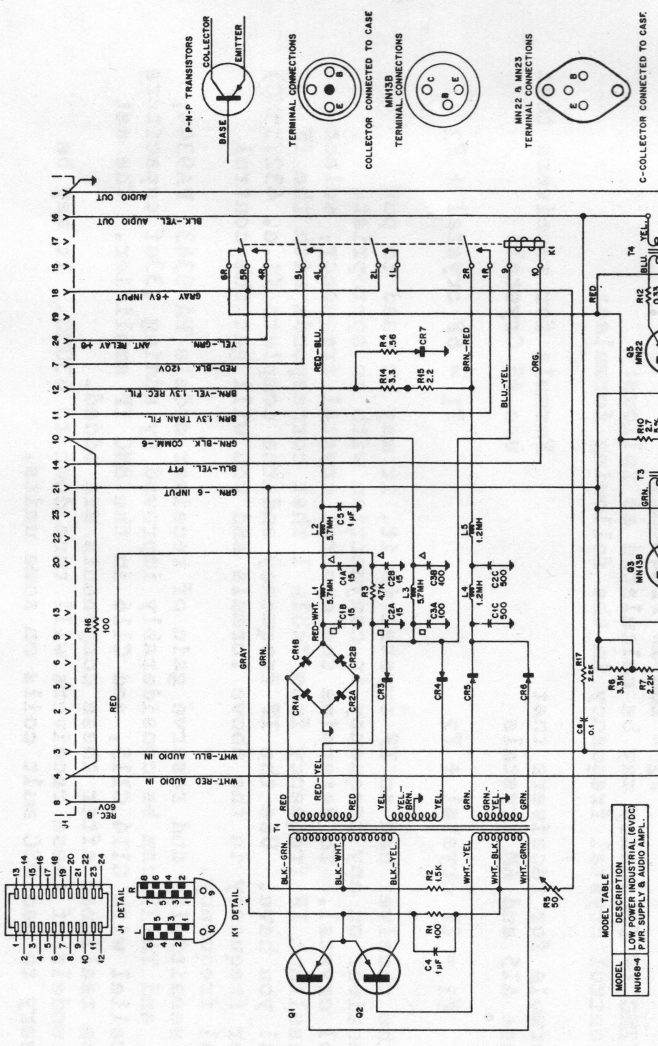

NU168 6 V DC Power Supply
Schematic Diagram
Motorola No. 63C849851-D
11/58-CP

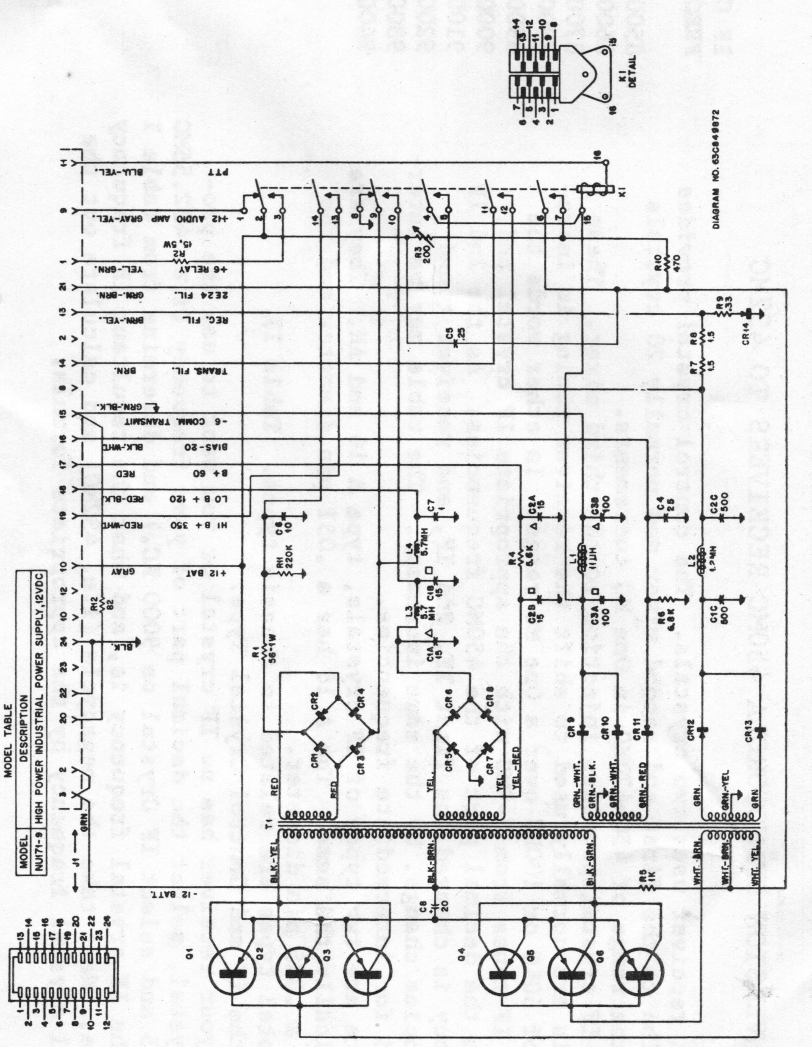

NU171 12 V DC Power Supply
Schematic Diagram
Motorola No. 63C849872-J
11/58-CP

CONVERSION OF MOTOROLA 450MC RECEIVERS TO 432MC

Each receiver uses two crystals. The control crystal provides injection to the first and second mixer and normally 20 crystals cover the range of 450-470MC in One MC increments.

The IF crystal provides injection to the third mixer. These crystals are normally used to shift the receiver tuning in increments of 50KC or 100KC over a One MC range. In other words the second IF tunes from 8-9MC with the appropriate IF crystal and selects the decimal part of the 450MC frequencies. As the 2nd IF frequency is changed the first IF, 2nd IF, and receiver tuned frequencies change by the same increment. The table may be interpolated for intermediate frequencies.

There are two types of IF crystals, type A 16 and AN. They are electrically the same. The A 16 has a .051 pin diameter and the AN has a .095 pin diameter.

Crystal types are related to chassis types. Table II shows the IF and Control Crystal Type.

If your receiver has no IF crystal or you want to use the proper crystal, select the decimal part of your frequency (i.e. 432.55MC use .55 and select IF Crystal on 9000 KC.) and determine from table I what the IF crystal frequency is, and what the resultant IF frequency will be. Next take the megacycle (i.e. 432MC) and calculate out the control crystal frequency by the appropriate formula.

Table I

IF CRYSTAL FREQUENCY	FREQUENCY DEC ENDING	RESULTANT 2ND IF
8500	.050	8.045MC
8600	.150	8.145
8700	.250	8.245
8800	.350	8.345
8900	.450	8.445
9000	.550	8.545
9100	.650	8.645
9200	.750	8.745
9300	.850	8.845
9400	.950	8.945

Third IF always 455 KC

Table II

RECEIVER MODEL	IF XTAL	CONTROL XTAL
PA 9343	A16	A15
PA 9344	A16	A15
TA 109	A16	A15
TA 129	A16	A15
TA 141	AN	AS
TA 143	AN	AS
TA 146	AN	AS
TA 141A	AN	AM

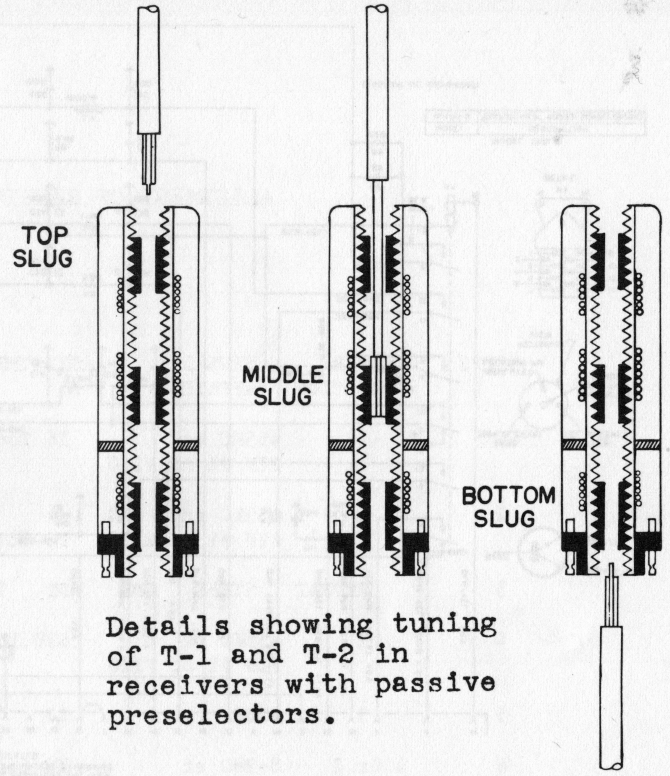

Details showing tuning of T-1 and T-2 in receivers with passive preselectors.

Formula for receivers that use A15 and AM Crystals

$$F_{Crystal} = \frac{F_c - F_2}{14}$$

Formula for receivers that use AS Crystals

$$F_{Crystal} = \frac{F_c - F_2}{42}$$

F_c = Carrier Frequency

F_2 = 2nd IF Frequency

The 72MC IF frequency may be calculated as follows:
Use control crystal frequency in the following formulas:

Formula for receivers that use A15 and AM Crystals

$F_1 = 2F_{crystal} + F_2$

Formula for receivers that use AS Crystals

$F_1 = 6F_{crystal} + F_2$

If the receiver has an IF crystal in it, it may be used to put the receiver on any frequency in conjunction with an appropriate control crystal. To determine the control crystal frequency, select the resultant IF frequency from Table 1 that corresponds with the IF crystal you have. Use the IF frequency and the complete (i.e. 432.55MC) carrier frequency in the above formula and you will get the control crystal frequency.

The sensitivity and reserve gain of receiver models PA 9343, PA9344, TA109, and TA129 can be considerably improved by adding .33uf capacitors in parallel with C114,C115, and C116 in the 8MC IF amplifier. The set must be realigned after these components are added.

All models of these receivers will tune down to 430MC. It may be necessary to pad OSC mult coils on some units.

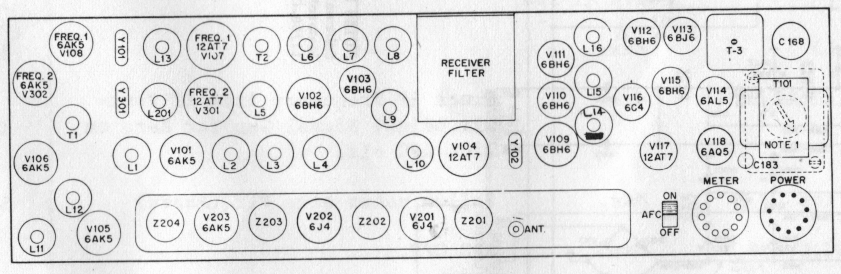

PARTS LOCATION FOR TA109, TA129 RECEIVERS

PARTS LOCATION FOR RECEIVERS WITH PASSIVE PRESELECTOR

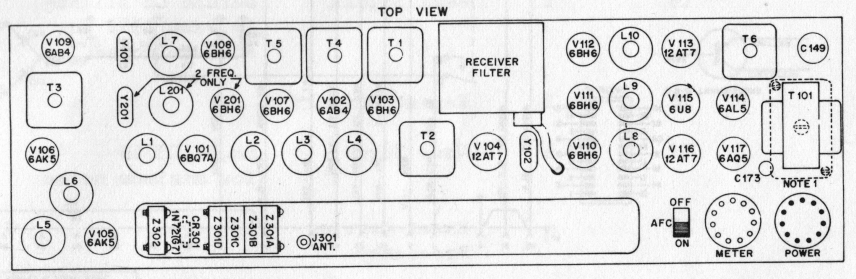

ALIGNMENT OF RECEIVERS WITH PASSIVE PRESELECTOR

STEPS	METER POSITION	SIGNAL APPLIED	ADJUSTMENT	METER READING	NOTES
1	4	455KC at PIN #1 of V110	T6 Top	0	Discriminator Secondary
2	5	455KC at PIN #1 of V110	T6 Bottom	Max.	Discriminator Primary
3	REPEAT STEPS ONE AND TWO				
4	2	455KC at PIN #1 of V110	L10,L9,L8	Max.	Remove V103 to Reduce Saturation
5	3	NONE	L7	Max.	Hold AFC OFF.
6	1 Or 2	8-9MC at PIN #1 of V103	T2 top,middle, bottom	Max.	Select Exact IF Frequency from crystal chart. Adjust signal gen. for zero disc. Reading position 4 with AFC off.
7	1	8-9MC at PIN #1 of V102	T1 top,middle, bottom	Max.	same notes as step #6 to be followed.
8	6	NONE	T5 top,bottom	Max.	
9	7	NONE	T4 bottom T3 top,bottom	Max.	
10	7	NONE	T4 top	Slight Dip (1-2ua)	
11	8	NONE	L6,L5	Max.	
12	1 Or 2	71-75MC on PIN 2 of Li	L4,L3,L2,L1	Max.	Exact IF Frequency from IF Formula.Adjust Signal Gen for Zero on Dic. AFC off.
13	1 Or 2	Same as 12	T4 top	Max.	Follow notes step #12.(Above)
14	1	Carrier Freq. at Ant.Jack	Z301,C,B,A,D	Max.	AFC OFF.
15	1	Weak Signal	Detune L6 slightly.Peak Z302 for Minimum noise.		AFC off.
16	1	Repeat Step 15			
17	1	Weak Signal	L6,L1,Z301D for minimum noise		AFC OFF.
18	4	Exact Carrier Frequency	L7	0	AFC OFF.

ALIGNMENT OF TA 109 & TA 129 450MC RECEIVERS

STEP	METER POSITION	SIGNAL APPLIED	ADJUSTMENT	METER READING	NOTES
1	4	455KC AT PIN #1 V109	T3 Top	0	Disc. Secondary
2	5	455KC AT PIN #1 V109	T3 Bottom	Max.	Disc. Primary
3	REPEAT STEPS ONE AND TWO				
4	2	455KC AT PIN #1 V109	L14,L15,L16	Max.	455KC IF Remove V103 to reduce saturation.
5	6	NONE	1st osc.,L13	Max.	Hold AFC OFF
6	1 or 2	8-9MC PIN #1,V103	L9,L10	Max	Exact IF Frequency from Crystal Chart. Adjust Signal Gen. Freq for Zero on Disc Pos. #4 AFC OFF.
7	1	8-9MC PIN #1, V102	L6,L7,L8	Max	Exact IF Frequency from Crystal Chart. Adjust Signal Gen Freq. for Zero on Disc Pos. #4 AFC OFF.
8	7	NONE	T2, T1	Max.	OSC Mult Coils
9	1 or 2	71-75MC PIN #1, V203	L1,L2,L3,L4	MAx. Unsaturated	Exact IF Frequency from IF Formula. Adjust Signal Gen Freq for Zero on Disc. AFC Off.
10	8	NONE	L11,L2	Max.	Tripler Coils
11	1 or 2	Carrier Freq. Ant. Jack	Z204,Z203 Z202,Z201	Max.	RF Stages AFC OFF
12	4	Exact Carrier At Ant Jack	L13	0	AFC OFF
13	REPEAT STEPS 6 through 12 USING CARRIER FREQUENCY INTO ANTENNA JACK. BE SURE RECEIVER IS UNSATURATED. AFC SHOULD BE OFF AND CARRIER EXACTLY ON FREQUENCY. SIGNAL GENERATOR FREQUENCY ADJUSTED TO READ ZERO ON POSITION #4.				
14	4	NONE	Disc Secondary T3 Top	-2	See General Alignment Notes

CONVERSION AND ALIGNMENT OF 450MC TRANSMITTERS

1. Transmitter crystals are type R 24 available from Motorola or International Crystal Company.
   Crystal frequency = $f_o = \frac{\text{carrier frequency}}{24}$
2. All tuned circuits except L6 and L7 will peak normally without any modification down to 430MC.
3. Add 5pf across L6 and 5pf across L7 to tune to 430MC.
4. Remove Z5 and replace with short piece of RG 58 A/U. Z1, on early transmitters is low pass filter and may be left on transmitter. Z5 is a tunable output filter, and it will not tune to 430MC. It must be removed.
5. With crystal in socket energize transmitter. Use 20,000 ohms per volt meter between ground and the indicated pin on the test socket. DO NOT put meter in pin 7 or 8. B+ is on these pins.

PIN	FUNCTION	VOLTS	TEST SET READING	ADJUST TU704	ADJUST A11 OTHERS
1	Relative output	.3-.5	15-25ua	23+L13	C-35-L13
2	Oscillator grid	.4	20	L1	L1
3	2nd doubler grid	..2	10	L5	L5
4	3rd doubler grid	.3	15	L6-L7	L6-L7
5	Tripler grid	.3-.4	15-20	C26-L8	C26
6	Final grid	.4-.5	20-25	Z1-L12	C31-L11

If a Motorola Test Set is available, use the readings in the test set column.

NOTE: L11 and L13 must be adjusted with a fibre screwdriver. Peak L1, L5, L6, L7, and C26 for maximum readings. Adjust L8 or L9 for maximum grid current. Use caution not to overcouple. L9 is adjusted on some units by bending coil. Later units have a mechanically adjustable loop.

6. Z1 or C31 and L11 are simultaneously adjusted for a peak on TS pin 6. On units with C31 (a long screw with flat capacitor on end) a peak should be readily obtained. On units with Z1, (a flat vane on cavitycover) leave L11 midway and vane Z1 at a 45° angle. Remove cover and through trial and error adjustment move Z2, a sliding capacitor back and forth for a reading on pin 6 . (.2v is fixed bias) Cover must be replaced each time. When indications of resonance are obtained on pin 6, peak Z1 and L11 for maximum final grid current. Vane in cavity cover should be about 45° to side of cavity, if not, readjust Z2 inside cavity.
7. Final output tank is resonated exactly the same as described above for driver. Transmitter must be terminated with 50 ohm load. Relative output may be read on pin 1. C35 and L13 are simultaneously peaked for maximum power. Use a fibre screwdriver in L13. On units with Vane the internal capacitor has to be juggled around until vane resonates and output peaks with vane at 45° position. Plate current may be read with meter plugged into pin 7 and pin 8 (caution meter is 500V above ground) normal plate current will be between 12 and 14 V (50-100MC). If a wattmeter is available, power should be between 10-20 Watts depending on tube conditions. Drive to final should not be below .4V for normal output.
8. L1 may be used to adjust transmitter frequency. If proper crystal is obtained, reading on pin 2 will be about on peak when transmitter is on frequency. If an attempt to pull the crystal too far is made, the drive will drop off excessively.
9. To check modulation some form of monitor is desirable. If none is available, set modulation for minimun received distortion in a suitably tuned FM receiver.

P9340, TA110 PARTS LOCATION

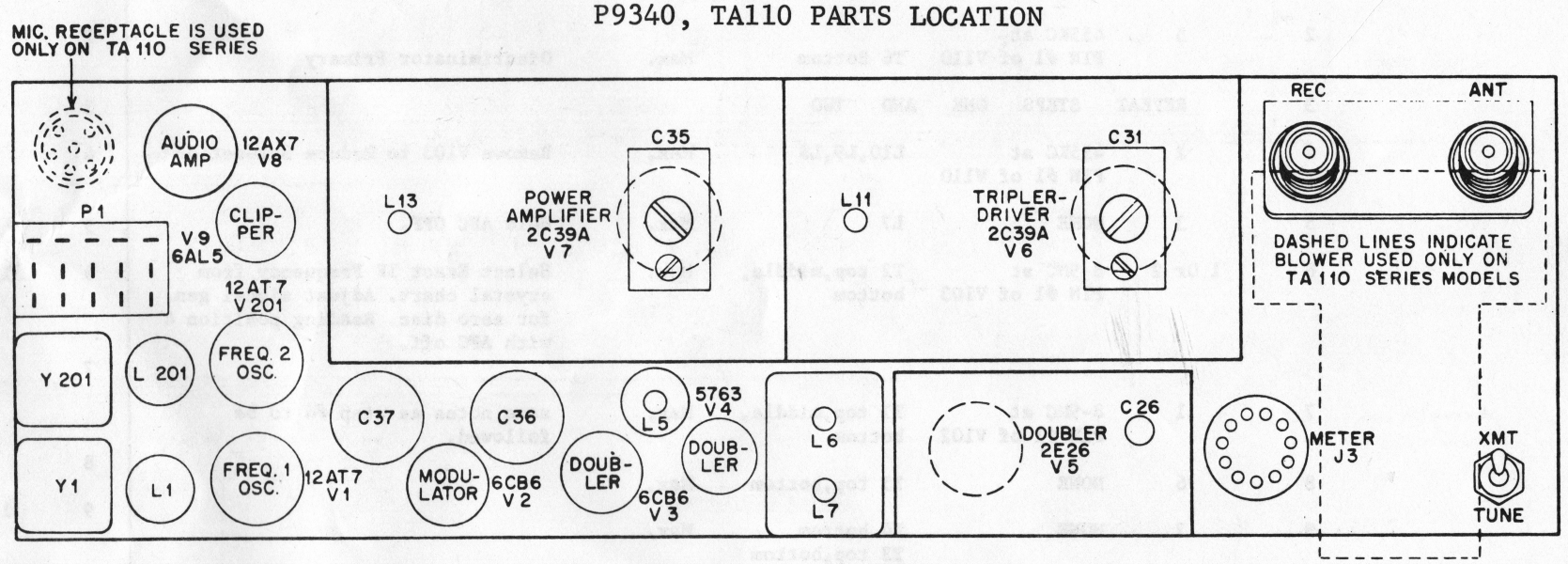

TA204 PARTS LOCATION

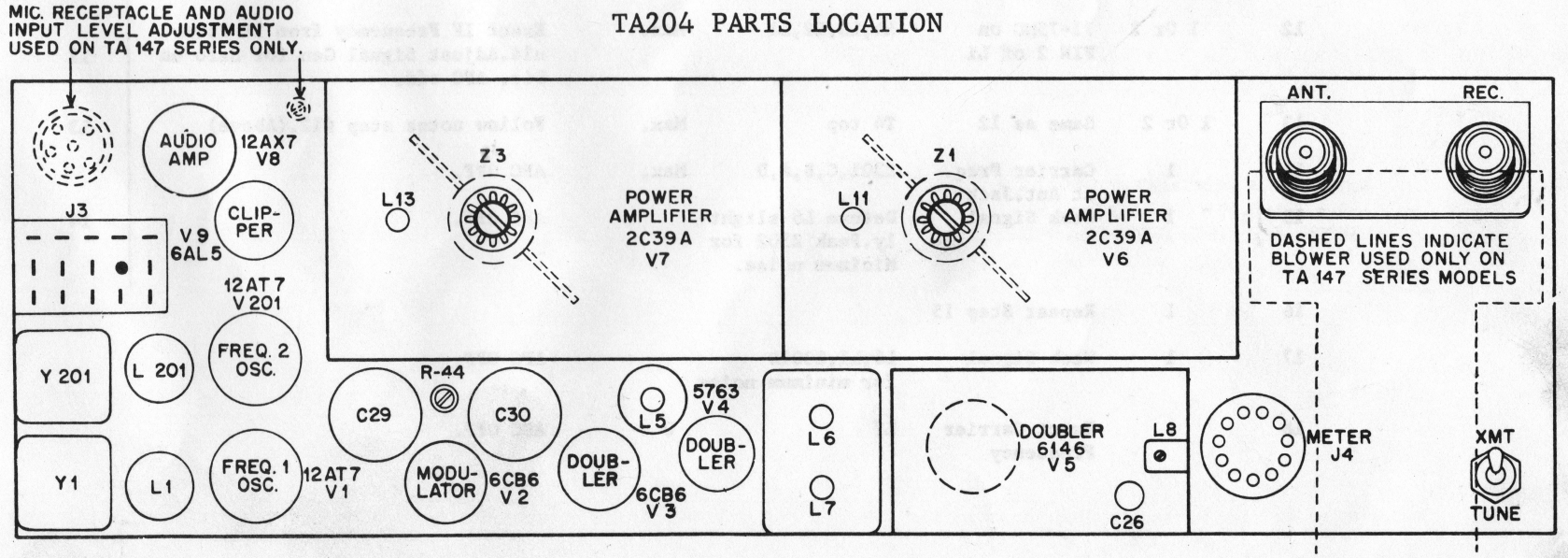

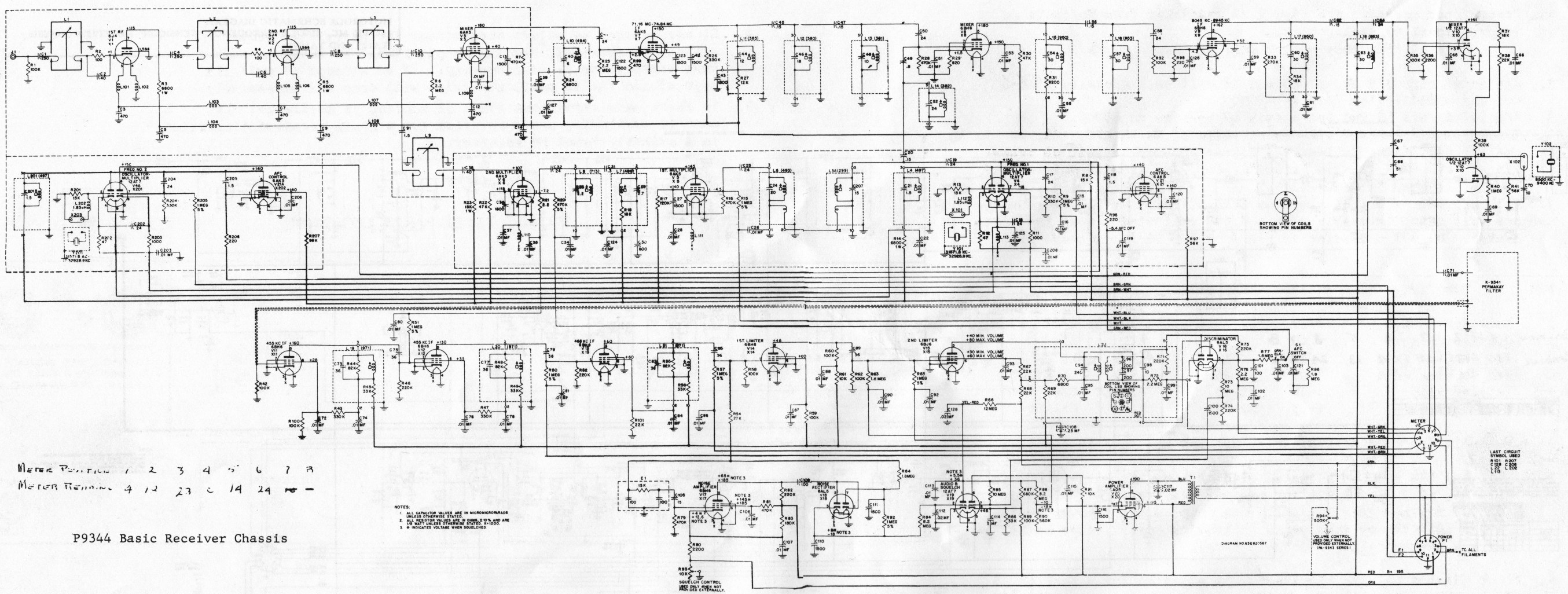

Meter Position 1 2 3 4 5 6 7 8

Meter Reading 4 12 23 C 14 24 FS —

P9344 Basic Receiver Chassis

MOTOROLA SCHEMATIC DIAGRAM
450-470 MC. TWO FREQUENCY
"SENSICON" RECEIVER CHASSIS

PART NO. 63E820567
ISSUE X2 8/52-UM

MOTOROLA SCHEMATIC DIAGRAM
450-470 MC. SINGLE-FREQUENCY "SENSICON" RECEIVER CHASSIS
(TA129 AND TA109)

P-9345 RECEIVER RF DECK

TU120 BASIC RECEIVER CHASSIS

METER POSITION	1	2	3	4	5	6	7	8
METER READING	0	13	18	0-2	13	24	6	6

CHASSIS	APPLICATION
TA109	SINGLE FREQ. "SENSICON" RCVR. WITH LOCAL VOL. CONT.
TA129	SINGLE FREQ. "SENSICON" RCVR. LESS LOCAL VOL. CONT.

THIS DIAGRAM IS APPLICABLE AS SHOWN TO THE LATEST PRODUCTION VERSION INDICATED BY SUFFIX NUMBERS IN THE TABLE. IT IS APPLICABLE TO EACH PRECEDING VERSION LISTED UNLESS OTHERWISE NOTED. SERVICE BULLETINS LISTED FOR SUCCESSIVE VERSIONS.

| | SHOP/FIELD SERVICE BULLETIN NUMBERS | | |

450-470 MC SINGLE-FREQUENCY "SENSICON" RECEIVER CHASSIS SCHEMATIC DIAGRAM (TA141)

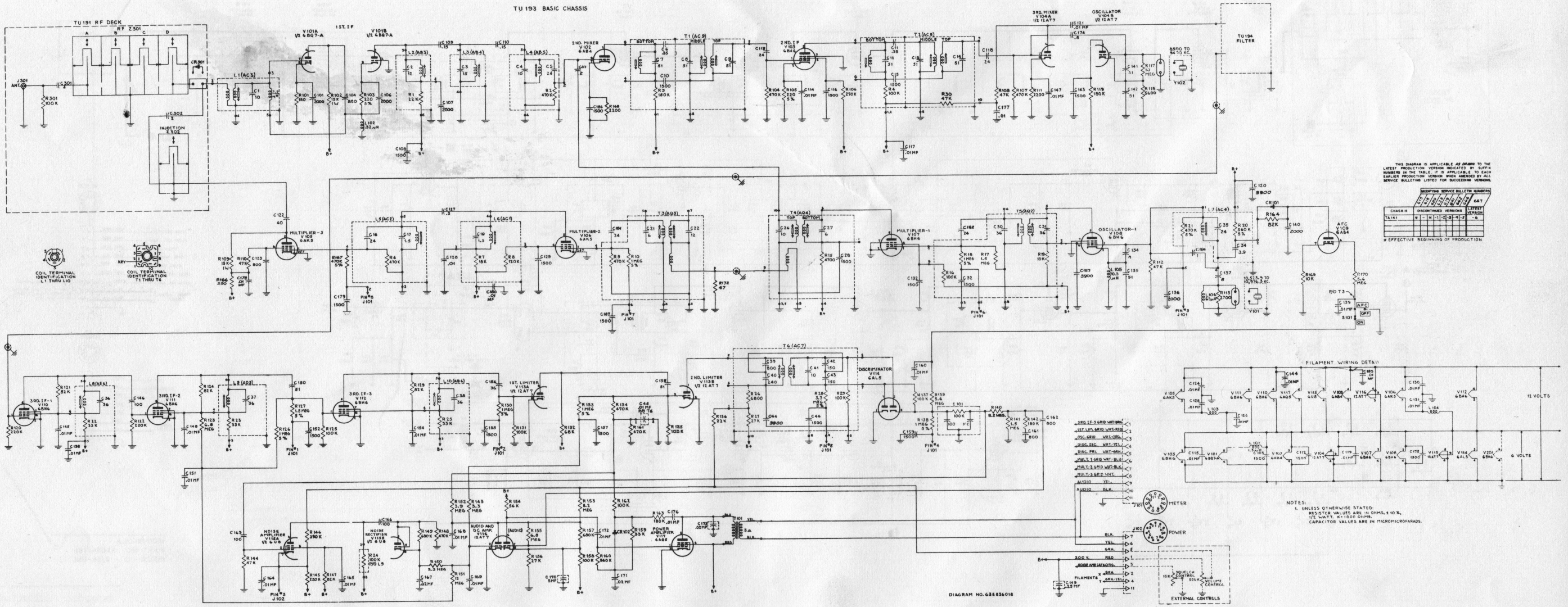

MOTOROLA
PART NO. 63E836018
ISSUE - H 11/54-UM

450-470 MC SENSICON "A" RECEIVER
SCHEMATIC DIAGRAM

TA141-A

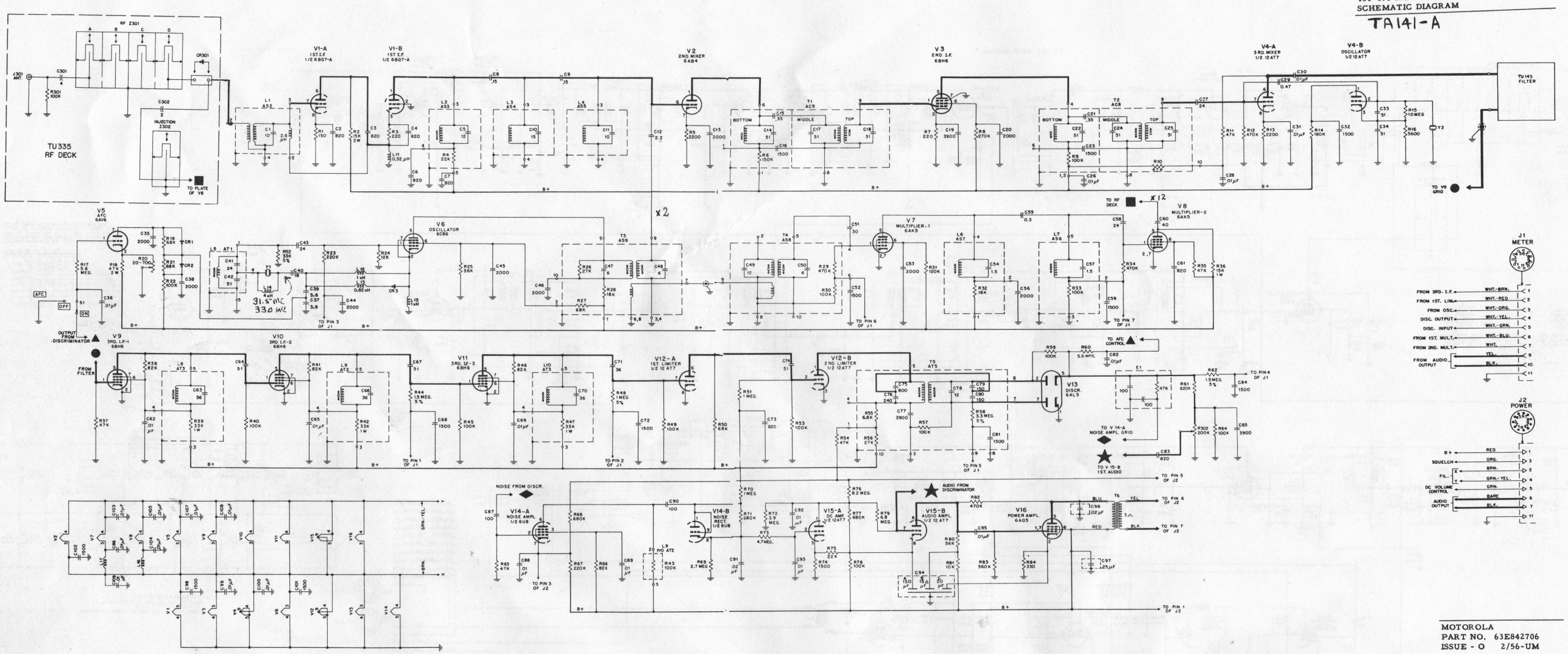

MOTOROLA
PART NO. 63E842706
ISSUE - O 2/56-UM

90.

450-470 MC Dual Squelch
Base Station Receiver
Schematic Diagram
Motorola No. 63Z8356072-A
10/58-CP

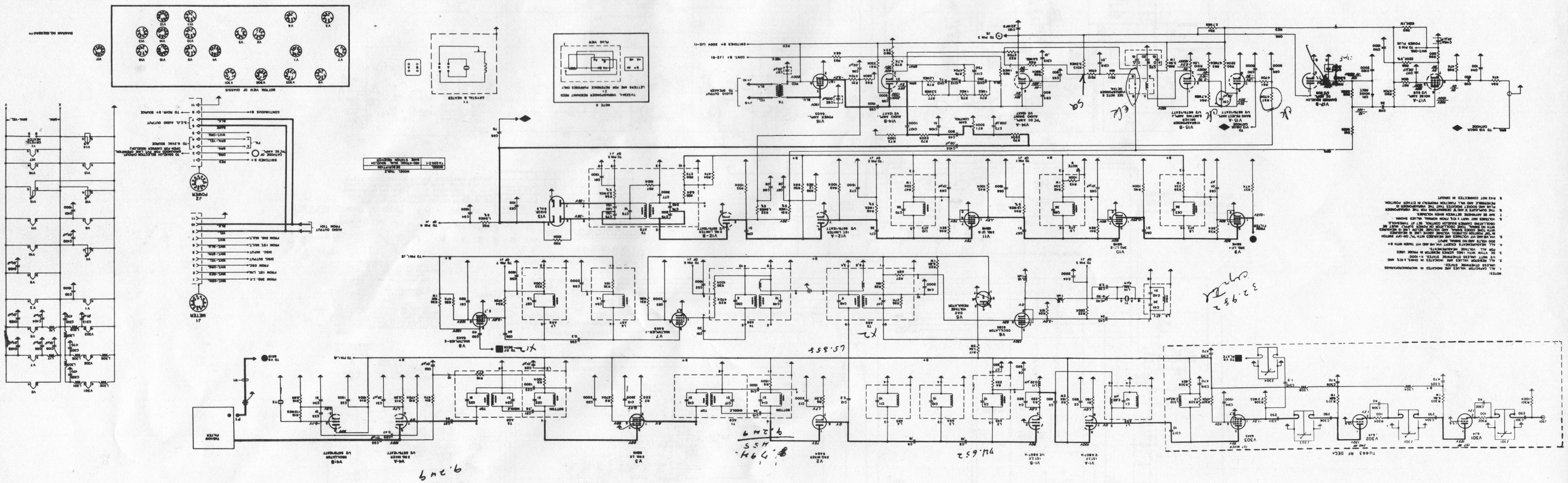

MOTOROLA SCHEMATIC DIAGRAM
450-470 MC. TRANSMITTER CHASSIS
(TU110 SERIES)

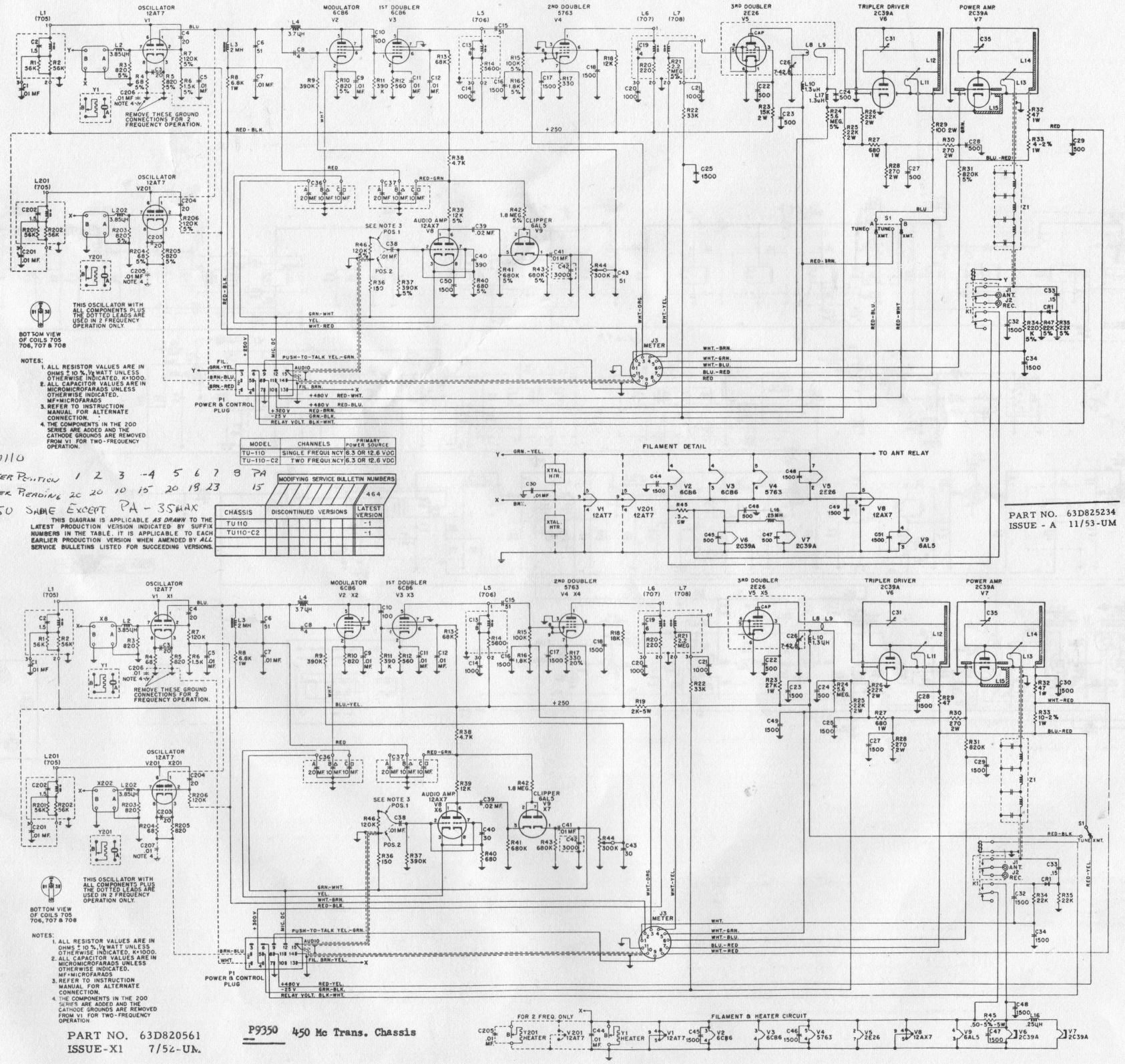

NOTES:
1. ALL RESISTOR VALUES ARE IN OHMS ± 10 %, ½ WATT UNLESS OTHERWISE INDICATED. K=1000.
2. ALL CAPACITOR VALUES ARE IN MICROMICROFARADS UNLESS OTHERWISE INDICATED. MF=MICROFARADS
3. REFER TO INSTRUCTION MANUAL FOR ALTERNATE CONNECTION.
4. THE COMPONENTS IN THE 200 SERIES ARE ADDED AND THE CATHODE GROUNDS ARE REMOVED FROM V1 FOR TWO-FREQUENCY OPERATION.

MODEL	CHANNELS	PRIMARY POWER SOURCE
TU-110	SINGLE FREQUENCY	6.3 OR 12.6 VDC
TU-110-C2	TWO FREQUENCY	6.3 OR 12.6 VDC

CHASSIS	DISCONTINUED VERSIONS	MODIFYING SERVICE BULLETIN NUMBERS 464	LATEST VERSION
TU110			-1
TU110-C2			-1

THIS DIAGRAM IS APPLICABLE AS DRAWN TO THE LATEST PRODUCTION VERSION INDICATED BY SUFFIX NUMBERS IN THE TABLE. IT IS APPLICABLE TO EACH EARLIER PRODUCTION VERSION WHEN AMENDED BY ALL SERVICE BULLETINS LISTED FOR SUCCEEDING VERSIONS.

TU110
Meter Position 1 2 3 -4 5 6 7 8 PA
Meter Reading 2C 20 10 15 20 18 23 15
P9350 Same Except PA - 35MAX

PART NO. 63D825234
ISSUE - A 11/53-UM

P9350 450 Mc Trans. Chassis

PART NO. 63D820561
ISSUE-X1 7/52-UM

450-470 MC. TRANSMITTER CHASSIS (TU204 SERIES) SCHEMATIC DIAGRAM

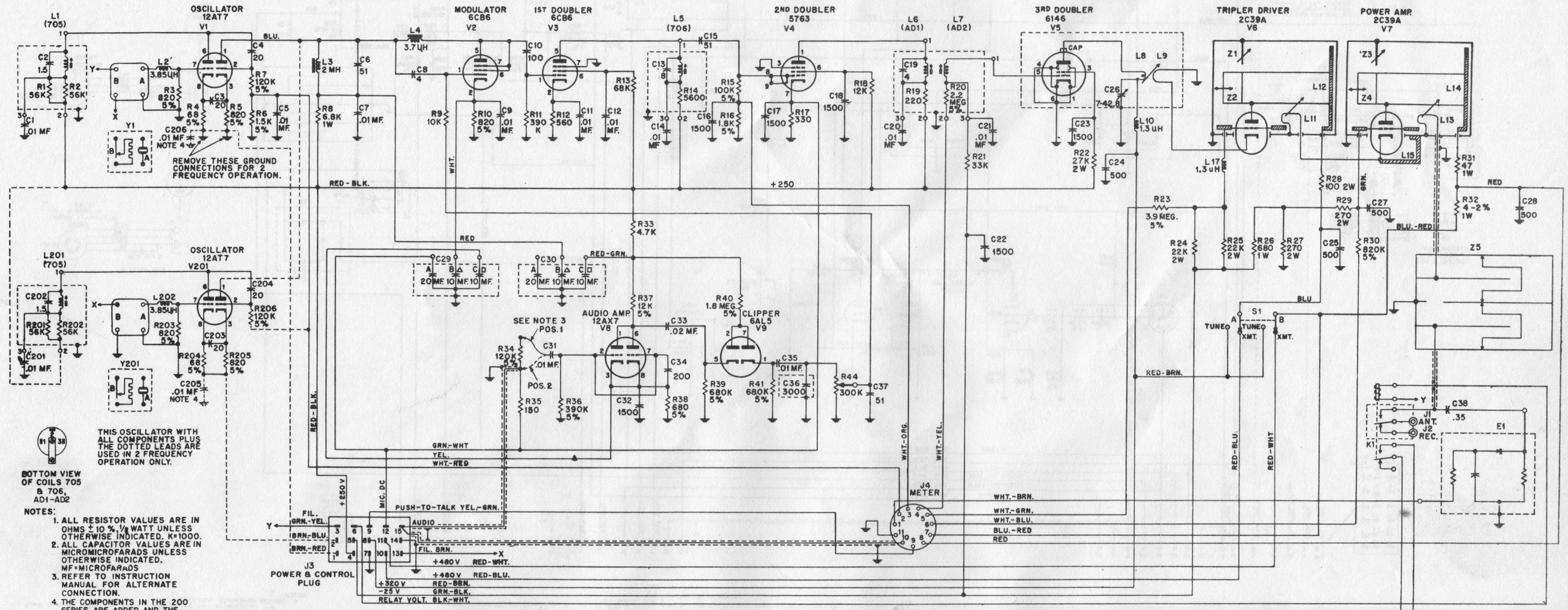

NOTES:

1. ALL RESISTOR VALUES ARE IN OHMS ± 10 %, 1/2 WATT UNLESS OTHERWISE INDICATED. K=1000.
2. ALL CAPACITOR VALUES ARE IN MICROMICROFARADS UNLESS OTHERWISE INDICATED. MF=MICROFARADS
3. REFER TO INSTRUCTION MANUAL FOR ALTERNATE CONNECTION.
4. THE COMPONENTS IN THE 200 SERIES ARE ADDED AND THE CATHODE GROUNDS ARE REMOVED FROM V1 FOR TWO-FREQUENCY OPERATION.

MODEL	CHANNELS	PRIMARY POWER SOURCE
TU 204	SINGLE FREQUENCY	6.3 OR 12.6 VDC
TU 204-C2	TWO FREQUENCY	6.3 OR 12.6 VDC

THIS DIAGRAM IS APPLICABLE *AS DRAWN* TO THE LATEST PRODUCTION VERSION INDICATED BY SUFFIX NUMBERS IN THE TABLE. IT IS APPLICABLE TO EACH EARLIER PRODUCTION VERSION WHEN AMENDED BY *ALL* SERVICE BULLETINS LISTED FOR SUCCEEDING VERSIONS.

CHASSIS	MODIFYING SERVICE BULLETIN NUMBERS: 613, 633 — DISCONTINUED VERSIONS	663 — LATEST VERSION
TU204	— -1	-2
TU204-C2	— -1	-2

* NO SUFFIX

FILAMENT DETAIL

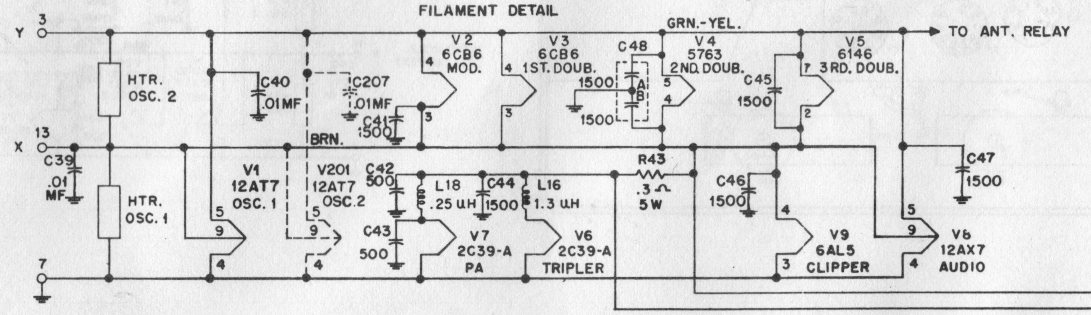

MOTOROLA
PART NO. 63D836014
ISSUE - B 11/54-UM

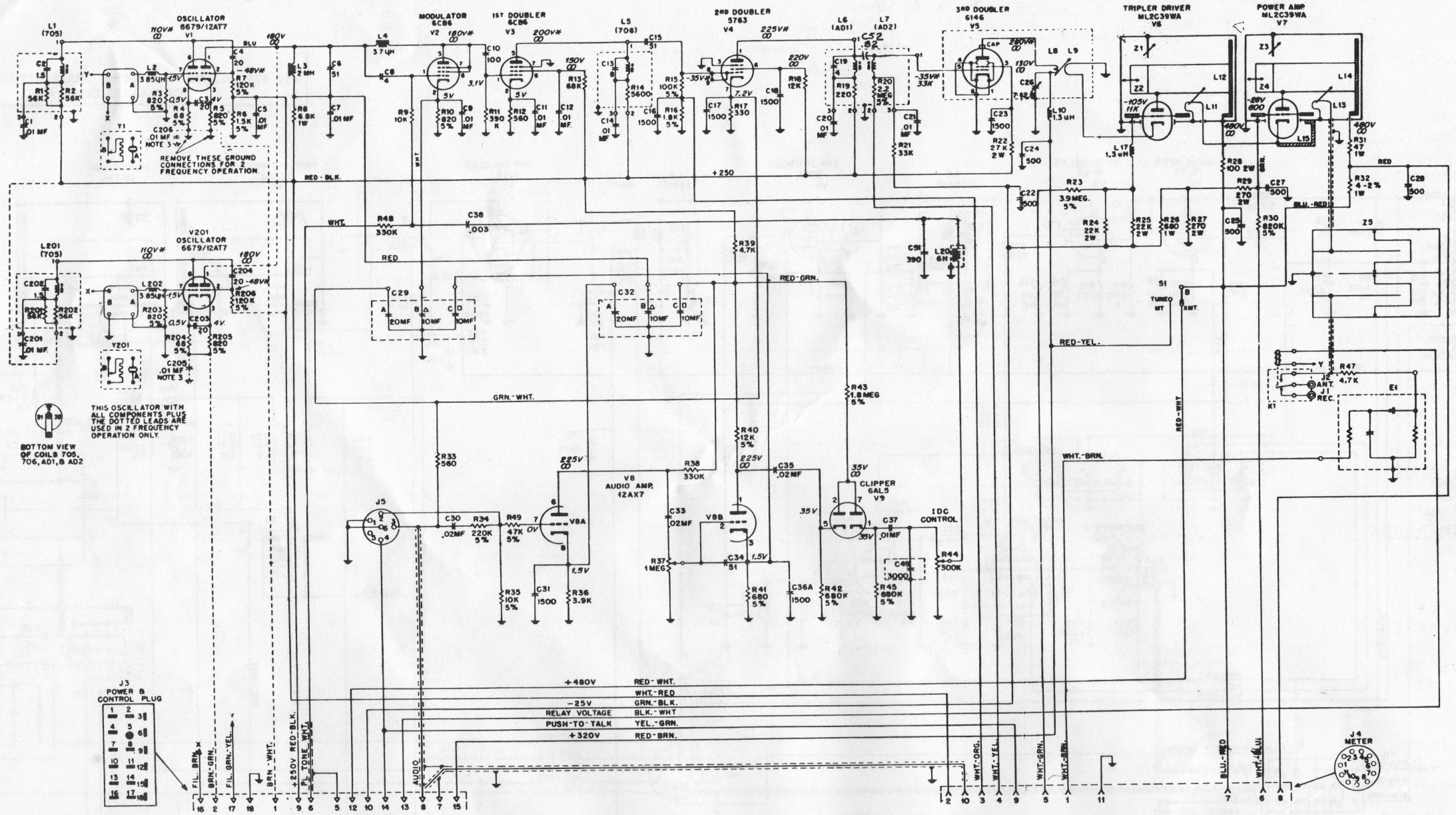

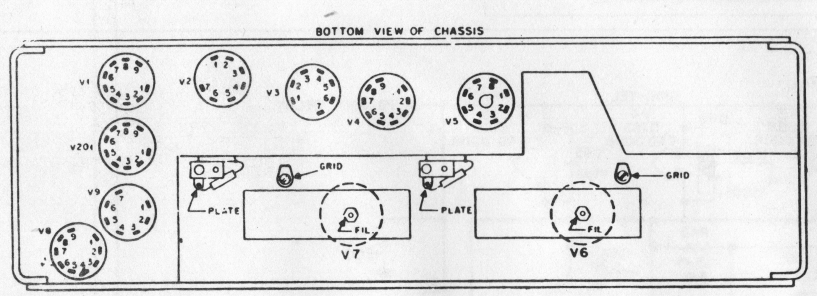

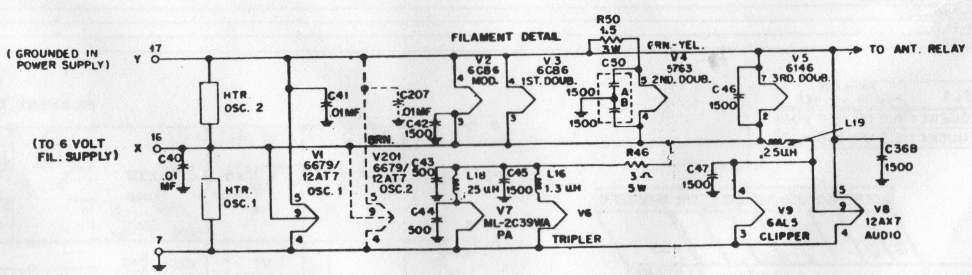

NOTES:
1. UNLESS OTHERWISE SPECIFIED:
   ALL RESISTOR VALUES ARE IN OHMS, ±10%, 1/2 WATT. K=1000 OHMS.
   ALL CAPACITOR VALUES ARE IN MICROMICROFARADS
2. OPTIONAL BLOWER CIRCUIT WIRING.
3. THE COMPONENTS IN THE 200 SERIES ARE ADDED AND THE CATHODE GROUNDS ARE REMOVED FROM V1 FOR TWO-FREQUENCY OPERATION.
4. ALL VOLTAGE READINGS TAKEN WITH RESPECT TO GROUND UNDER "TRANSMIT" CONDITIONS WITH VTVM
5. * READINGS NOTED ARE TAKEN WITH A 1MEG RESISTOR IN SERIES WITH PROBE OF VTVM.
6. RESISTANCE READINGS TAKEN WITH RESPECT TO GROUND AND WITH POWER SUPPLY DISCONNECTED.
7. ALL READINGS FOR V1 AND V201 ARE TAKEN WITH FREQUENCY SWITCH IN APPLICABLE POSITION ON TWO-FREQUENCY UNITS.
8. THE VALUES LISTED ARE NOMINAL AND ARE SUBJECT TO VARIATIONS OF ±10%.

450-470 MC "Private-line"
Base Station Transmitter
Schematic Diagram
Motorola No. 63E849786-A
10/58-CP

Instruction Sheet for 6 to 12 Volt Conversion P-9331 Power Supply

450-470MC Power Supply

A. Vibrator Socket (X-1) Receiver Supply

1. Disconnect the two brown leads of transformer T-1 from the terminal strip on side of chassis adjacent to the vibrator sockets. Tape each lead separately and dress these leads out of the way.

2. Disconnect the black-yellow, black, and yellow leads from pins 2, 4, and 5 respectively.

3. Remove lead from pin 6 to ground.

4. Remove lead from pin 3 to terminal strip adjacent to vibrator sockets.

5. Reconnect the black lead of T-1 to Pin 5.

6. Connect pins 2 and 4 together and then ground pin 2 at the adjacent ground lance.

7. Replace 100 ohm resistors (R1 and R2) with 270 ohm resistors

8. Connect a 7.5 ohm resistor from pin 6 to adjacent ground lance.

9. Connect a .01mfd capacitor from pin 6 to adjacent ground lance.

10. Reconnect the yellow and black-yellow leads to lug on terminal strip from which the two brown leads were removed in step A-1.

11. Connect a 20 ohm Resistor from pin 3 to terminal strip adjacent to vibrator sockets.

B. Vibrator Socket (X-2) Transmitter Supply

1. Disconnect the two black-yellow leads of transformer T-2

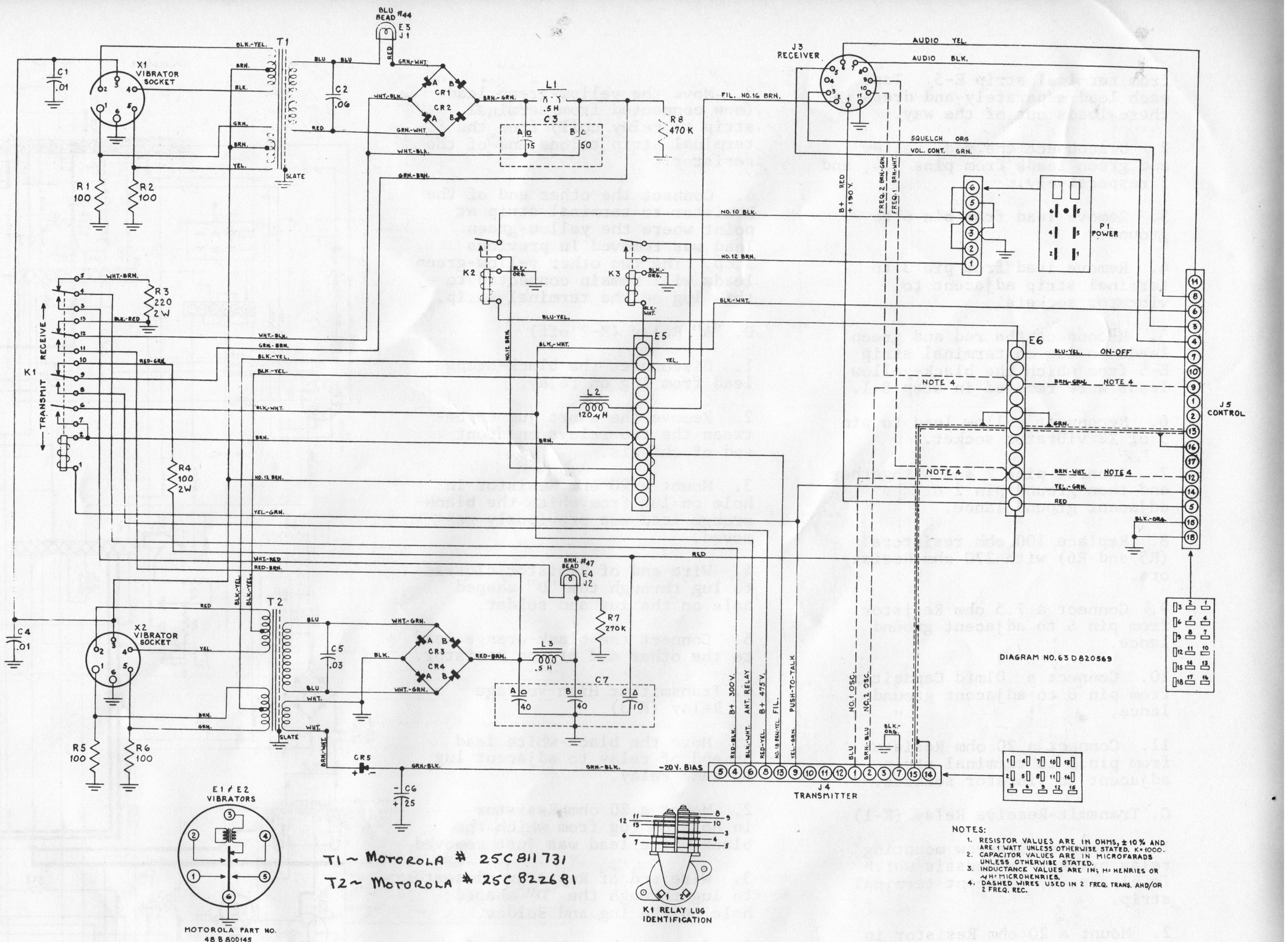

E1 & E2 VIBRATORS

MOTOROLA PART NO. 48 B 800145

T1 ~ MOTOROLA # 25C 811 731

T2 ~ MOTOROLA # 25C 822681

K1 RELAY LUG IDENTIFICATION

NOTES:
1. RESISTOR VALUES ARE IN OHMS, ± 10% AND ARE 1 WATT UNLESS OTHERWISE STATED. K = 1000.
2. CAPACITOR VALUES ARE IN MICROFARADS UNLESS OTHERWISE STATED.
3. INDUCTANCE VALUES ARE IN; H = HENRIES OR MH = MICROHENRIES.
4. DASHED WIRES USED IN 2 FREQ. TRANS. AND/OR 2 FREQ. REC.

MOTOROLA SCHEMATIC DIAGRAM
P-9331 MOBILE POWER SUPPLY, 6.3 VDC

PART NO. 63D820569
ISSUE 0 8/52-UM

from terminal strip E-5. Tape each lead separately and dress these leads out of the way.

2. Disconnect the red, yellow and green leads from pins 2,4, and 5 respectively.

3. Remove lead from pin 6 to ground.

4. Remove lead from pin 3 to terminal strip adjacent to vibrator sockets.

5. Reconnect the red and green leads to lug on terminal strip E-5 from which the black-yellow leads were removed in step B-1.

6. Reconnect yellow lead to pin 5 of X2 vibrator socket.

7. Connect pins 2 and 4 together and then ground pin 2 at the adjacent ground lance.

8. Replace 100 ohm resistors (R5 and R6) with 270 ohm Resistors.

9. Connect a 7.5 ohm Resistor from pin 6 to adjacent ground lance.

10. Connect a .01mfd Capacitor from pin 6 to adjacent ground lance.

11. Connect a 20 ohm Resistor from pin 3 to terminal strip adjacent to vibrator sockets.

C. Transmit-Receive Relay (K-1)

1. Remove sems screw mounting relay bracket to chassis which is closest to adjacent terminal strip.

2. Mount a 20 ohm Resistor in hole in chassis from which the sems screw was just removed.

3. Move the yellow-green lead (now connected from terminal strip to relay coil) from the terminal strip to one end of the resistor.

4. Connect the other end of the Resistor to terminal strip at point where the yellow-green lead was removed in previous step. The two other yellow-green leads will remain connected to this lug on the terminal strip.

D. "A" Relay (K-2 off)

1. Disconnect the black-orange lead from lug on relay.

2. Remove the short jumper between the two relays on front end of chassis.

3. Mount a 20 ohm Resistor in hole on lug from which the black-orange lead was previously removed.

4. Wire end of Resistor closest to lug through the "D" shaped hole on the lug and solder.

5. Connect the black-orange lead to the other end of the Resistor.

E. Transmitter High Voltage Relay (K-3)

1. Move the black-white lead on end of relay to adjacent lug on same relay.

2. Mount a 20 ohm Resistor in hole on lug from which the black-white lead was just removed

3. Wire end of Resistor closest to lug through the "D" shaped hole on the lug and solder.

4. Connect the other end of the Resistor to black-orange lead on the adjacent relay.

P-9331 POWER SUPPLY, FIELD MODIFICATION
FOR 12 VDC OPERATION
SCHEMATIC DIAGRAM

MOTOROLA
PART NO. 63D839408
ISSUE - O 12/54-UM

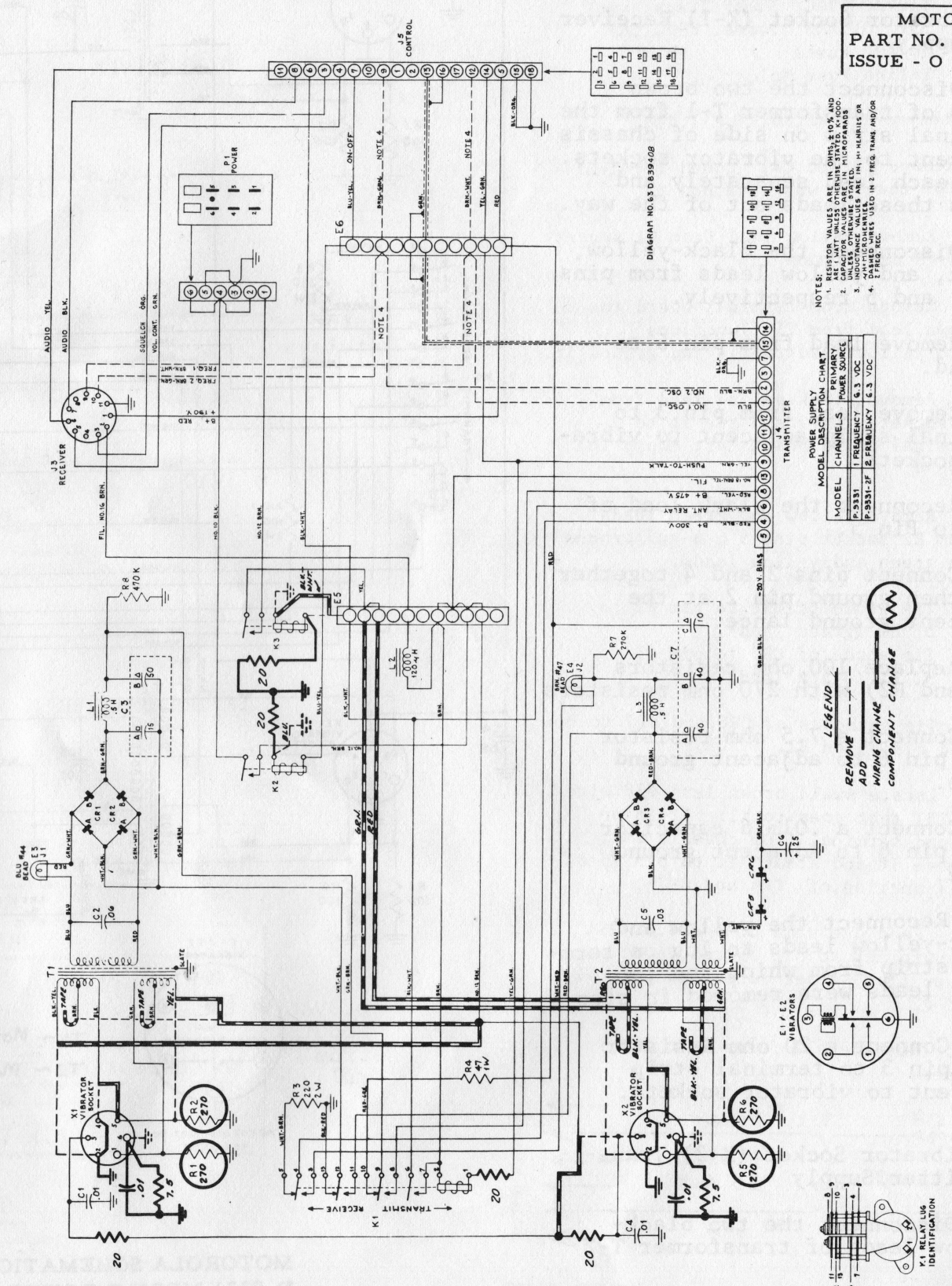

T44 110VAC POWER SUPPLY CONVERSION

Parts Required Are:

1 110VAC-6VAC, 35AMP Transformer
2 35V 0.5AMP Diodes; CR6, CR7
5 20 AMP Fuses
1 Inline Fuse Holder

1. Remove R1, R2,R6,R7,R11,R12.

2. Remove C3 and C4, ground terminal on TB1 that C3 was attached to.

3. Remove yellow lead from E1 socket pin #6 and ground it.

4. Remove from terminal board the brown lead from T1 (Junctions into yellow lead to F1) and ground it.

5. Remove black-yellow lead from E1 socket pin #2 and tie it to terminal board point left empty in step 4.

6. Remove yellow and green leads from E2 socket pins 5 & 6 and ground the green and yellow leads.

7. Tie anode of CR6 to pin #1 of E1 (green lead).
Tie anode of CR7 to pin #5 of E1 (black lead).

8. Tie cathodes of CR6 and CR7 to unused pin #5 on E2.

9. Locate small brown lead #18 wire on TB1 that goes to K1. It is on second terminal from chassis end. Remove it and attach it to pin #5 of E2 (junction of CR6 and CR7).

10. Feed one side of the 6.3V-35A transformer to pin #5 and #6 of power plug, other output to pins #1 and #2.

11. Replace all fuses with 20AMP fuses.

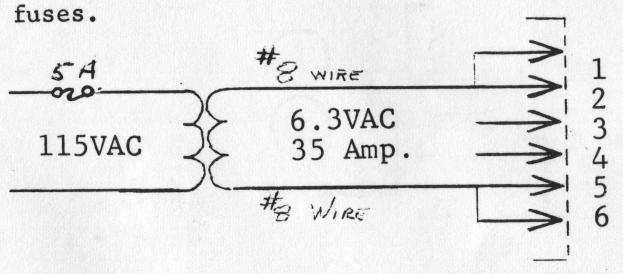

POWER PLUG

MODIFIED TRANSFORMER WIRING FOR 110VAC CONVERSION

T1 RECEIVER

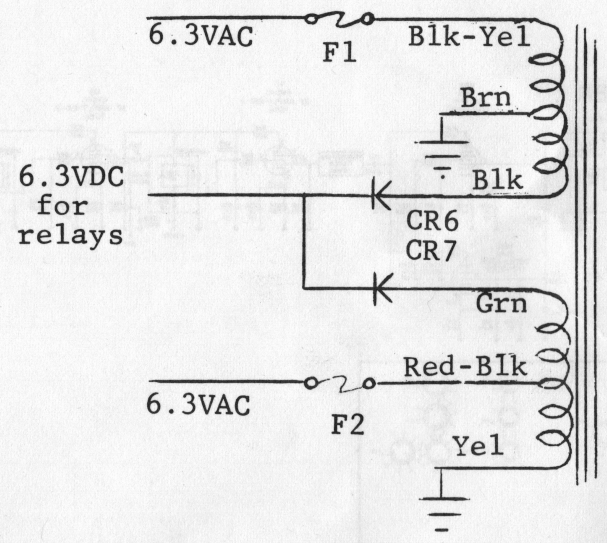

T2 TRANSMITTER

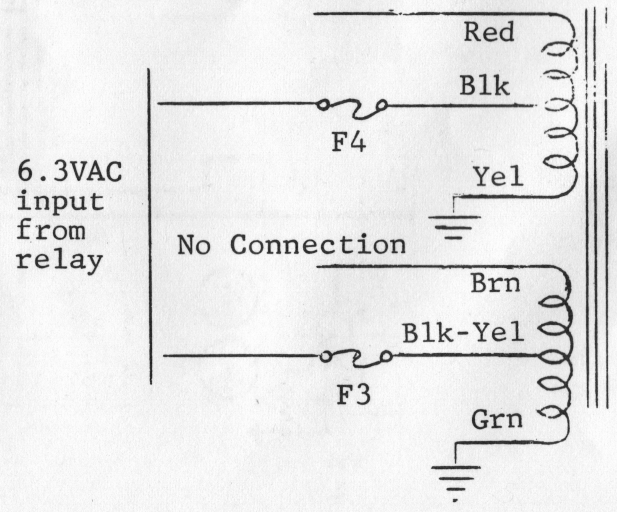

MOTOROLA SCHEMATIC DIAGRAM 450-470 MC. MOBILE POWER SUPPLY (TU 136 SERIES)

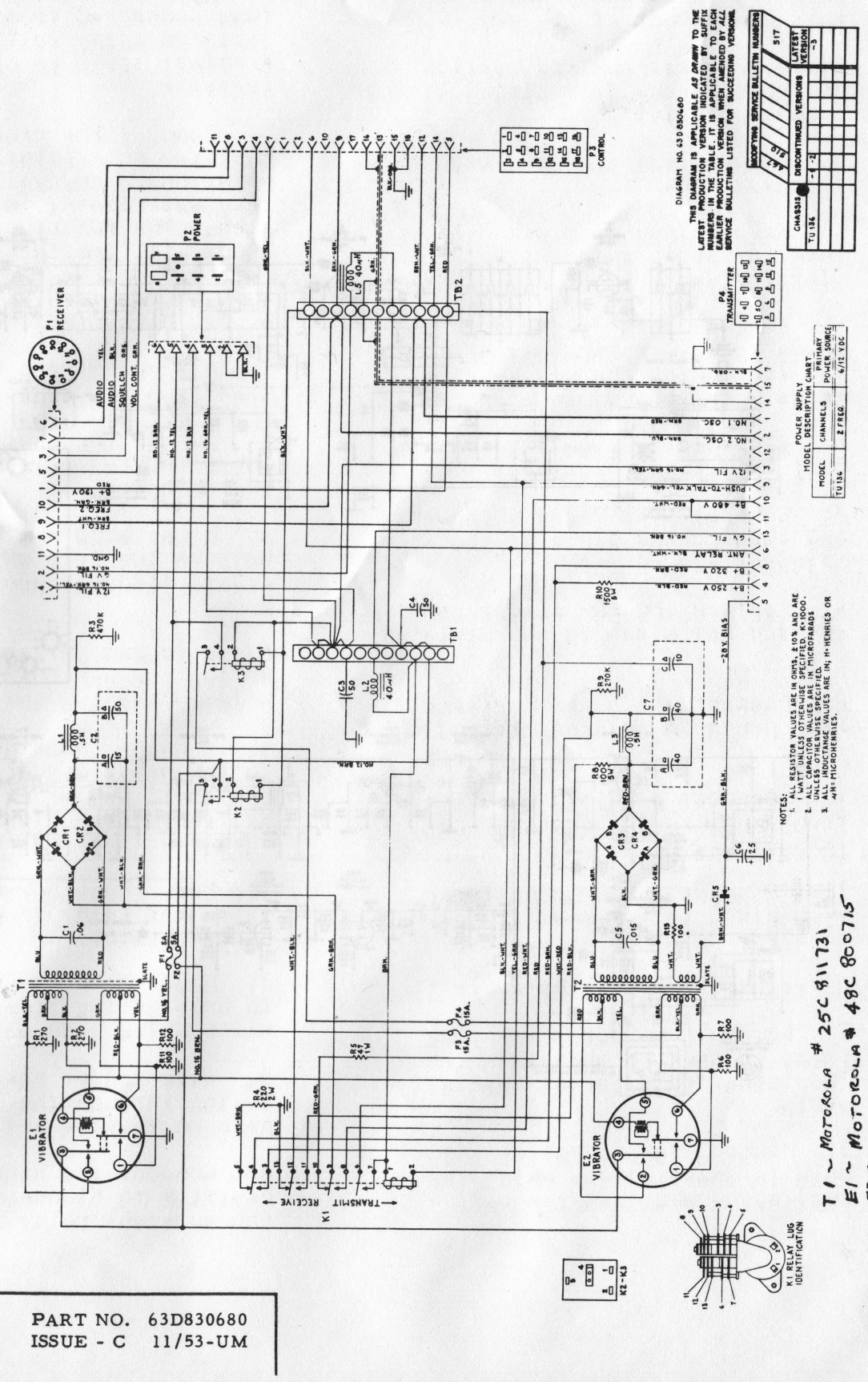

PART NO. 63D830680
ISSUE - C 11/53-UM

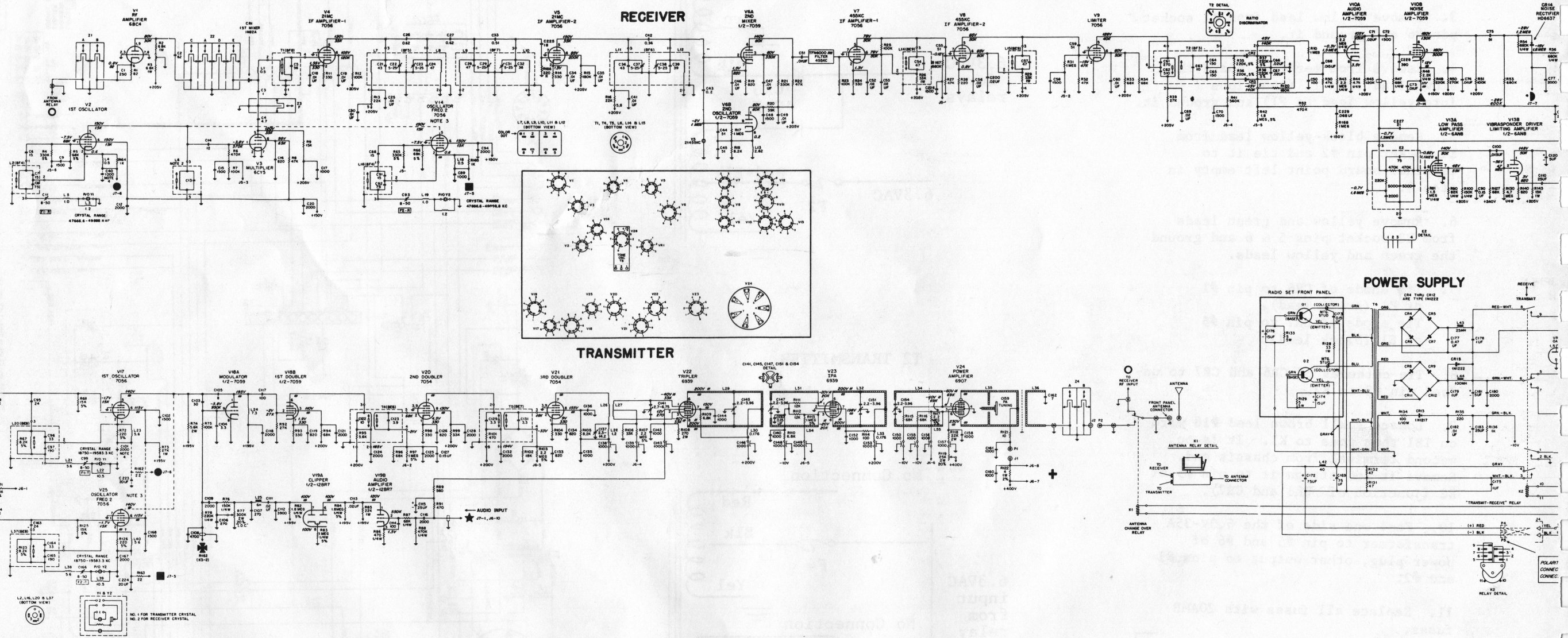
RECEIVER
TRANSMITTER
POWER SUPPLY
V1 RF AMPLIFIER 6BC4
V2 1ST OSCILLATOR
V3 MULTIPLIER 6CT3
V4 21MC IF AMPLIFIER-1 7056
V5 21MC IF AMPLIFIER-2 7056
V6A 2ND MIXER 1/2-7059
V6B OSCILLATOR 1/2-7059
V7 455KC IF AMPLIFIER-1 7056
V8 455KC IF AMPLIFIER-2 7056
V9 LIMITER 7056
RATIO DISCRIMINATOR
V10A AUDIO AMPLIFIER 1/2-7059
V10B NOISE AMPLIFIER 1/2-7059
CR16 NOISE RECTIFIER HD6637
V13A LOW PASS AMPLIFIER 1/2-6AN8
V13B VIBRASPONDER DRIVER LIMITING AMPLIFIER 1/2-6AN8
V14 OSCILLATOR FREQ 2 7056
V17 1ST OSCILLATOR 7056
V18A MODULATOR 1/2-7059
V18B 1ST DOUBLER 1/2-7059
V19A CLIPPER 1/2-12BR7
V19B AUDIO AMPLIFIER 1/2-12BR7
V20 2ND DOUBLER 7054
V21 3RD DOUBLER 7054
V22 TRIPLER 6939
V23 1PA 6939
V24 POWER AMPLIFIER 6907
V25 OSCILLATOR FREQ 2 7056
AUDIO INPUT
ANTENNA
FRONT PANEL ANTENNA CONNECTOR
ANTENNA RELAY DETAIL
TO RECEIVER
TO TRANSMITTER
TO ANTENNA CONNECTOR
ANTENNA CHANGE OVER RELAY
RADIO SET FRONT PANEL
"TRANSMIT-RECEIVE" RELAY
RELAY DETAIL
POLARITY CONNECTIONS

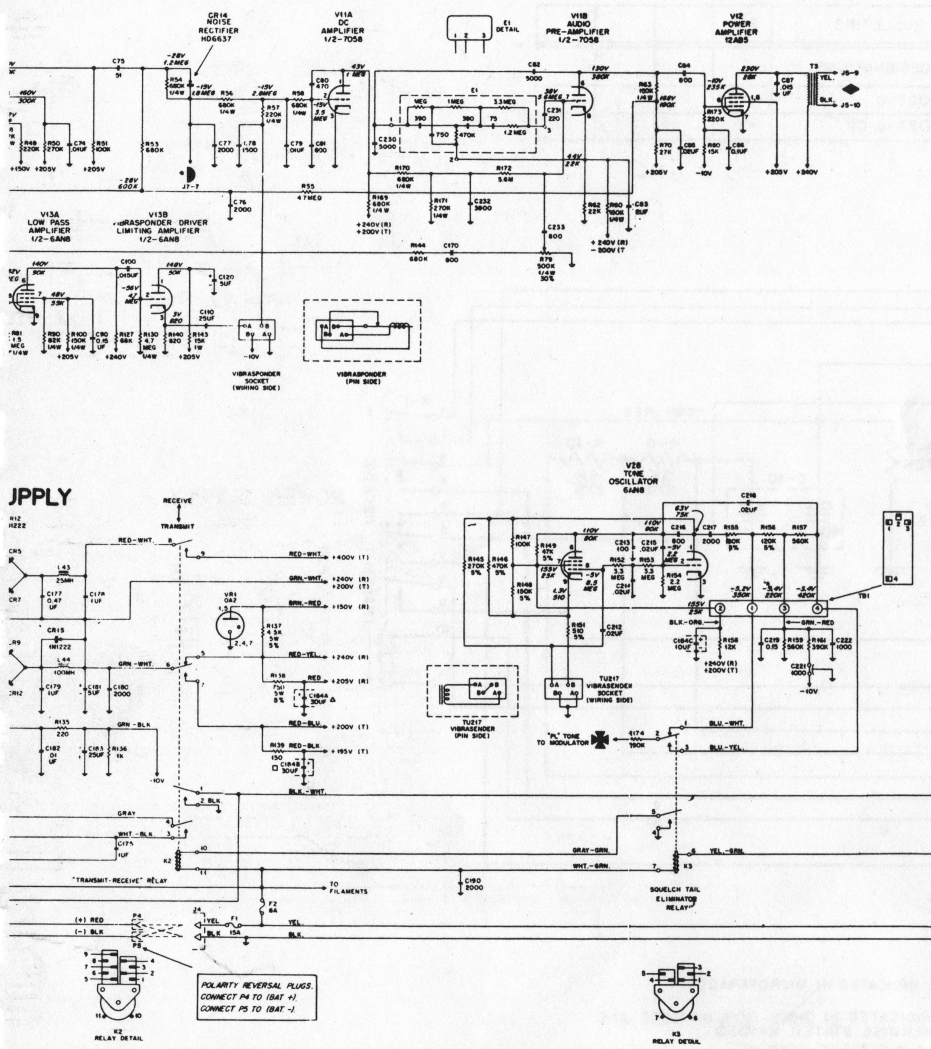

Schematic and Intercabling Diagram
Motorola No. 63E856575-B
10/58-UM

MODEL DESCRIPTION, POWER SUPPLY

MODEL	CHANNELS	OPERATING VOLTAGE
P-9027-C	1 FREQUENCY	6.3 V. DC
P-9027-C-C2	2 FREQUENCY	6.3 V. DC

THIS SCHEMATIC DIAGRAM IS APPLICABLE TO THE UNI-CHANNEL POWER SUPPLIES LISTED EFFECTIVE WITH THE CHASSIS DESIGNATIONS SHOWN.

AMENDMENTS TO THIS DIAGRAM WILL BE FOUND IN THE SERVICE BULLETINS NOTED.

SERVICE BULLETINS	218			
CHASSIS DESIGNATIONS				
P-9027-C	-1			
P-9027-C-C2	-1			

When converting this power supply to 12V for operation in a Mobile, both the transmitter and receiver filaments should be rewired in accordance with the 12V filament sketch shown on the appropriate transmitter and receiver schematics.

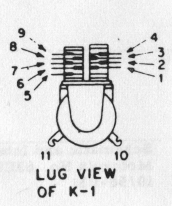

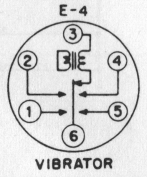

NOTES:
1. ALL CAPACITOR VALUES ARE INDICATED IN MICROFARADS UNLESS OTHERWISE STATED.
2. ALL RESISTOR VALUES ARE INDICATED IN OHMS. 10% OR MORE AND 1 WATT OR LESS UNLESS OTHERWISE STATED. K=1000.
3. DASHED LINES (— — —). C-2 & C-3 ARE USED IN 2 FREQ. P-9027-C-C2 ONLY.
4. LEAD SUPPLIED WITH QUIK-CALL UNIT. FOR USE WITH QUIK-CALL ONLY.

MOTOROLA SCHEMATIC DIAGRAM
6 VDC REAR MOUNT *UNI-CHANNEL* POWER SUPPLY

PART NO 63D802243
ISSUE-B 7/2/51

LOO.

6 TO 12VDC CONVERSION INSTRUCTIONS
10 TO 12 WATT POWER SUPPLIES

1. APPLICATION

These conversion instructions outline the procedure for converting the following 6-volt power supplies for 12-volt operation.

P-9027-A	Front Mount	1-Frequency
P-9027-A-C2	Front Mount	2-Frequency
P-9027-C	Rear Mount	1-Frequency
P-9027-C-C2	Rear Mount	2-Frequency

IMPORTANT

Conversion of the power supplies listed herein for 12 volt operation necessitates conversion of the assocaited transmitter, receiver, and control panel or control head.

In general, the following changes are made in the 6-volt power supplies to convert them for 12 volt operation.

a. The transmit-receiver relay (K1) is connected in series with the antenna changeover relay of the associated transmitter chassis.

b. The center taps of the two primary windings of Transformer T1 are disconnected. After conversion, the entire winding of each primary is used to induce voltage into the secondary windings on alternate half-cycles of the vibrator reed. This differs from the 6-volt circuit where one-half of one primary winding was connected in parallel with the corresponding one-half of the other primary winding. This change in transformer operation necessitates changes in the components of the vibrator circuit.

c. A voltage dropping resistor is connected in the battery lead to the vibrator.

d. Wiring of Relay K1 contacts changed to apply 12 volts to the transmitter "ON" indicator light on the control panel or control head.

2. PROCEDURE

The vibrator connection procedure outlined herein is divided into two parts . The first procedure covers power supplies without a suffix number, i.e., nos -1, -2 etc. after the model number. The second procedure is applicable to models with a -1 or higher suffix number.

a. Vibrator Connections for Models With No Suffix Number

(1) Disconnect the shielded lead from the two 2.9 uh choke coils located near the center of the chassis.

(2) Disconnect the other ends of the Two chokes from the two 0.5 mfd capacitors (C4 and C5). These two choke coils are not used in the 12-volt circuit.

(3) Disconnect the black-yellow transformer lead from Capacitor C4 (0.5mfd) and disconnect the red-yellow transformer lead from Capacitor 05 (0.5mfd) Tape each lead separately and dress it out of the way.

(4) Disconnect the sleeve covered lead from pin 3 of the vibrator socket. Use this lead to connect capacitors C4 and C5 in parallel. Do not solder the connections to Capacitors C4 and C5 until completing step 15.

(5) Disconnect the black, yellow, and red leads from pins 1,2, and 4 respectively of the vibrator socket.

(6) Remove the lead between vibrator socket pin 6 and ground.

(7) Remove the 100 ohm resistors connected between vibrator socket pins 1,2,4, and 5 respectively and ground.

(8) Connect the red and black leads to the ungrounded terminal of Capacitor C4 or C5.

(9) Connect pins 2 and 4 of the vibrator socket and then ground pin 4 at the ground lance near pin 5.

(10) Connect a 270 ohm resistor from fibrator socket pin 1 to ground.

(11) Connect a 270 ohm resistor from vibrator socket pin 5 to ground.

(12) Connect a 7.5 ohm resistor from vibrator socket pin 6 to ground.

(13) Connect the yellow transformer lead to vibrator socket pin 1.

(14) Connect a 20 ohm resistor from vibrator socket pin 3 to the ungrounded terminal of Capacitor C4.

(15) Connect the shielded lead, which was disconnected from the 2.9uh choke coil in step (1) to the ungrounded terminal of Capacitor C5.

(16) Connect a 0.5mfd capacitor between pin 1 and pin 5 of the vibrator socket.

(17) Solder all Connections.

b. Vibrator Connections for Models With Suffix Numbers

(1) Disconnect the black-yellow and red-yellow leads from the terminal strip adjacent to Transformer T1. Tape each lead separately and dress it out of the way.

(2) Disconnect the black, yellow, and red leads from pins 1,2, and 4, respectively.

(3) Remove the lead connected between vibrator socket pin 6 and ground.

(4) Remove the lead connected between vibrator socket pin 3 and the terminal strip adjacent to Transformer T1.

(5) Remove the 100 ohm resistors R1, R2, R3, and R4 which are connected between ground and vibrator socket pins 2, 1, 5, and 4 respectively.

(6) Remove the 0.01mfd capacitor (C12) if used, connected between vibrator socket pin 3 and ground.

(7) Connect the black and red transformer leads to the terminal strip adjacent to Transformer T1. Since the two terminals of this terminal strip are connected together, use either terminal.

(8) Connect vibrator socket pins 2 and 4 together and then ground pin 4 at the ground lance near pin 5 of the vibrator socket.

(9) Connect a 270 ohm resistor from vibrator socket pin 1 to ground.

(10) Connect a 270 ohm resistor from socket pin 5 to ground.

(11) Connect a 7.5 ohm resistor from vibrator socket pin 6 to the nearby ground lance.

(12) Connect the yellow transformer lead to pin 1 of the vibrator socket.

(13) Connect a 20ohm resistor from vibrator socket pin 3 to the terminal strip adjacent to Transformer T1.

(14) Mount two 0.5mfd capacitors in the two large holes near Transformer T1. Wire the center lug of the two capacitors to the terminal strip adkacemt tp Transformer T1. This connects the two capacitors in parallel between the do input circuit and ground.

(15) Connect a 0.5mfd capacitor between pin 1 and pin 5 of the vibrator socket.

C. Push-To-Talk Relay Modifications (All Models)

(1) Remove the black-white lead connected between terminal 8 of Relay K1 and terminal 14 of transmitter Terminal Strip E2.

3. LIST OF REQUIRED PARTS

ITEM NO.	QUANTITY	PART NO.	DESCRIPTION
1	2	6R6336	Resistor (270-10-1W) Carbon
2	1	17K482472	Resistor (7.5-10-5W) W. W.
3	1	17K85493	Resistor (20-5-5W) W. W.
4	1	8A800619	Capacitor (0.5 mfd-100 vdc)
5	1	8K892159	Capacitor (0.5 mfd-100 vdc)
7	2	23A483807	Capacitor (25 mfd-25 vdc)
8	2	65A475247	Fuse (6.25A-32V)
9	10"	10M488287	Wire (#20 Str Arlac Blk-Wht)
10	4"	10M517	Wire (#20 Sol Tin Lop)
11	2"	11W9530	Sleeving, varnished (#18 Yel)

(2) Front Mount Models Only

(a) Remove the black-white lead which connects between terminal 14 of Terminal Strip E2 and the red indicator light on the front panel.

(b) Connect a black-white lead from terminal 8 of Relay K1 to the terminal on the front panel red indicator light from which the lead was removed in previous step.

(3) Rear Mount Models Only

(a) Remove the black-white lead which connects between terminal 14 of Terminal Strip E2 and pin 4 of Power Plug P1.

(b) Connect a black-white lead from terminal 8 of Relay K1 to terminal 4 of the power plug.

(4) Move the brown lead which connects between terminal 9 of Terminal Strip E2 and the coil terminal of Relay K1 so that it connects between the coil terminal of Relay K1 and terminal 14 of Terminal Strip E2.

D. Fuses

(1) Remove the two 15-ampere fuses from the fuse holder.

(2) Paint out or use tape to mask over the markings on the fuse holder. It is recommended that 6.25 amperes now be marked on the fuse holder to insure that oversized fuses are not used.

(3) Place two 6.25 ampere fuses in the fuse holder.

E. Terminal Strip E1 Modifications

(1) Connect a 25mfd capacitor from terminal 9 to terminal 12 of the receiver terminal strip (E1). Connect the negative side of the capacitor to terminal 9.

(2) Connect a 25mfd capacitor from terminal 12 to terminal 15 of the receiver terminal strip (E1). Connect the negative side of the capacitor to terminal 15.

P-9027-C AND P-9027-C-C2 UNI-CHANNEL POWER SUPPLIES CONVERTED FOR 12 VOLT OPERATION SCHEMATIC DIAGRAM

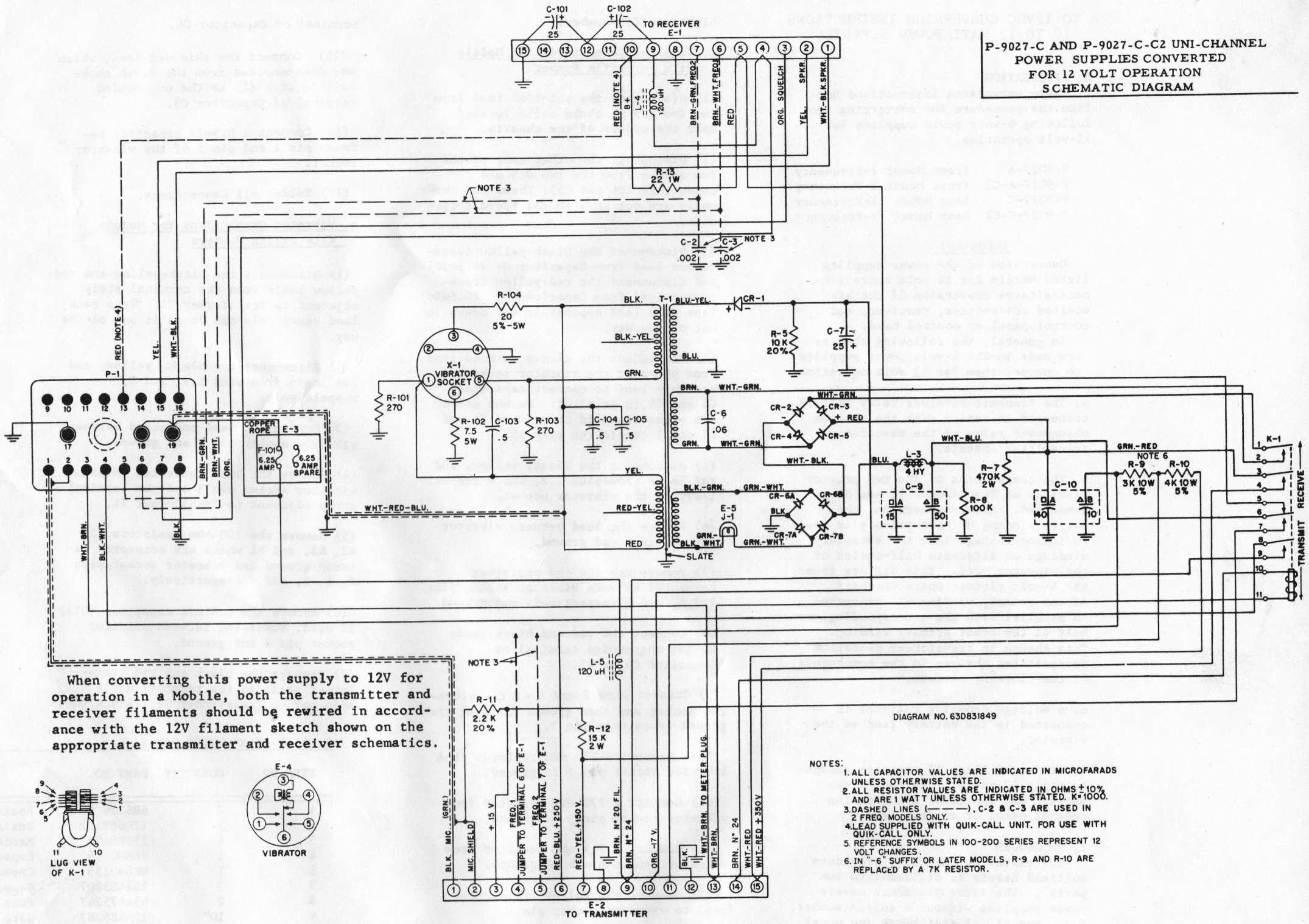

When converting this power supply to 12V for operation in a Mobile, both the transmitter and receiver filaments should be rewired in accordance with the 12V filament sketch shown on the appropriate transmitter and receiver schematics.

DIAGRAM NO. 63D831849

NOTES:
1. ALL CAPACITOR VALUES ARE INDICATED IN MICROFARADS UNLESS OTHERWISE STATED.
2. ALL RESISTOR VALUES ARE INDICATED IN OHMS ±10% AND ARE 1 WATT UNLESS OTHERWISE STATED. K=1000.
3. DASHED LINES (— — —). C-2 & C-3 ARE USED IN 2 FREQ. MODELS ONLY.
4. LEAD SUPPLIED WITH QUIK-CALL UNIT. FOR USE WITH QUIK-CALL ONLY.
5. REFERENCE SYMBOLS IN 100-200 SERIES REPRESENT 12 VOLT CHANGES.
6. IN "-6" SUFFIX OR LATER MODELS, R-9 AND R-10 ARE REPLACED BY A 7K RESISTOR.

MOTOROLA SCHEMATIC DIAGRAM
P-8661-A 60 WATT MOBILE POWER SUPPLY, 12.6 VDC

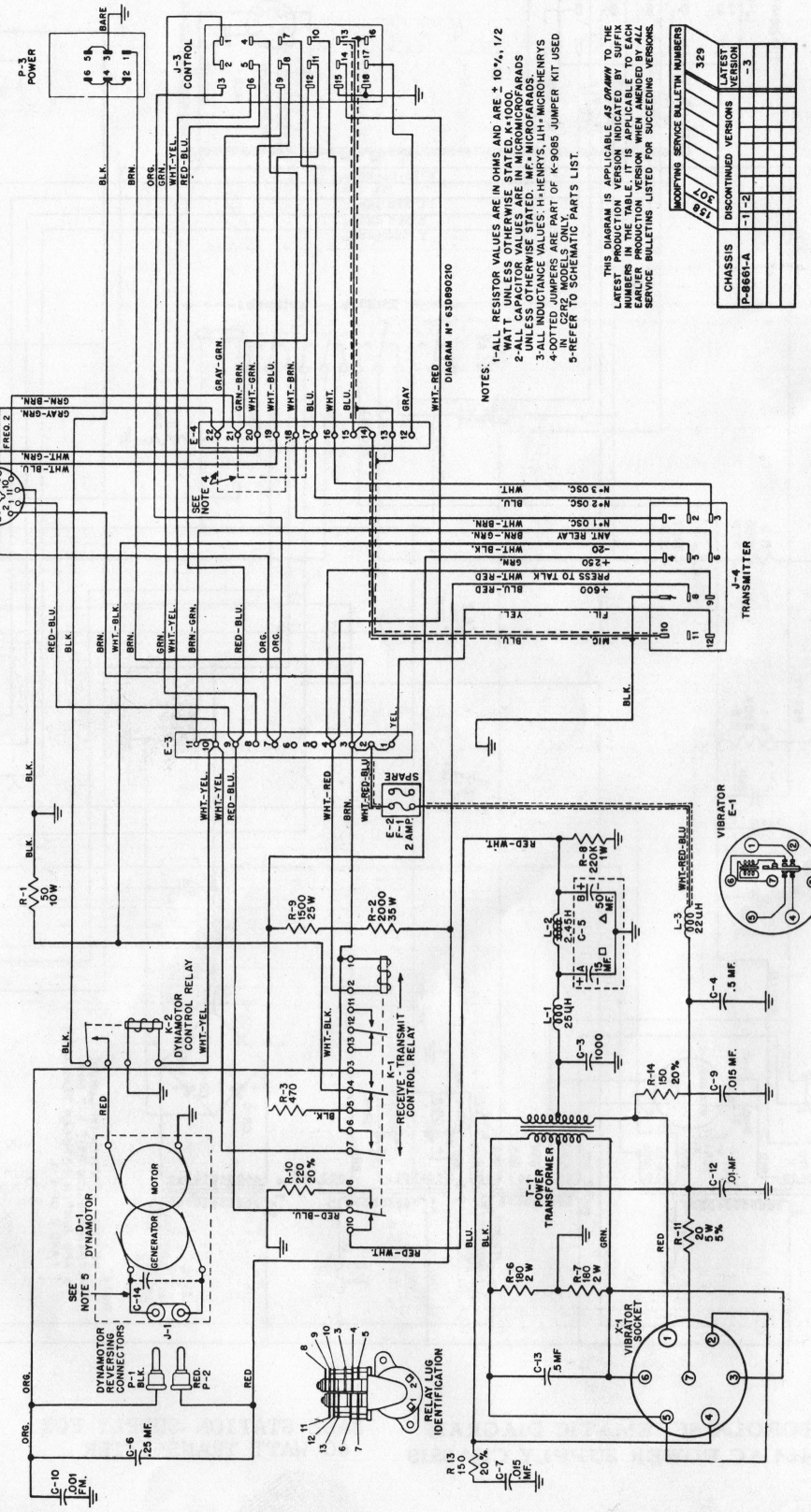

MOTOROLA SCHEMATIC DIAGRAM
P-8431-A 30 WATT MOBILE POWER SUPPLY, 12.6 VDC

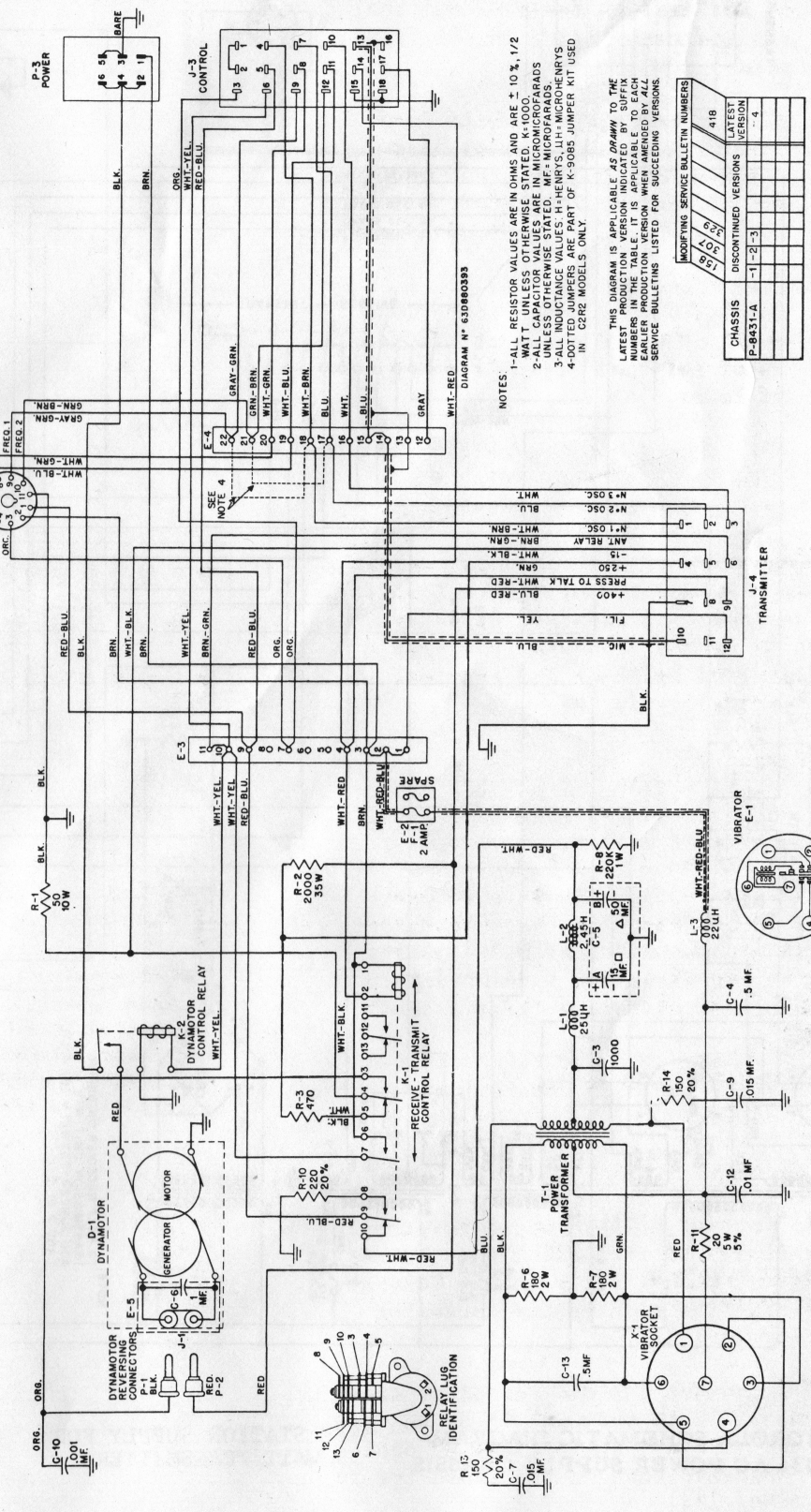

PART NO. 63D890210
ISSUE-H 6/52-RS

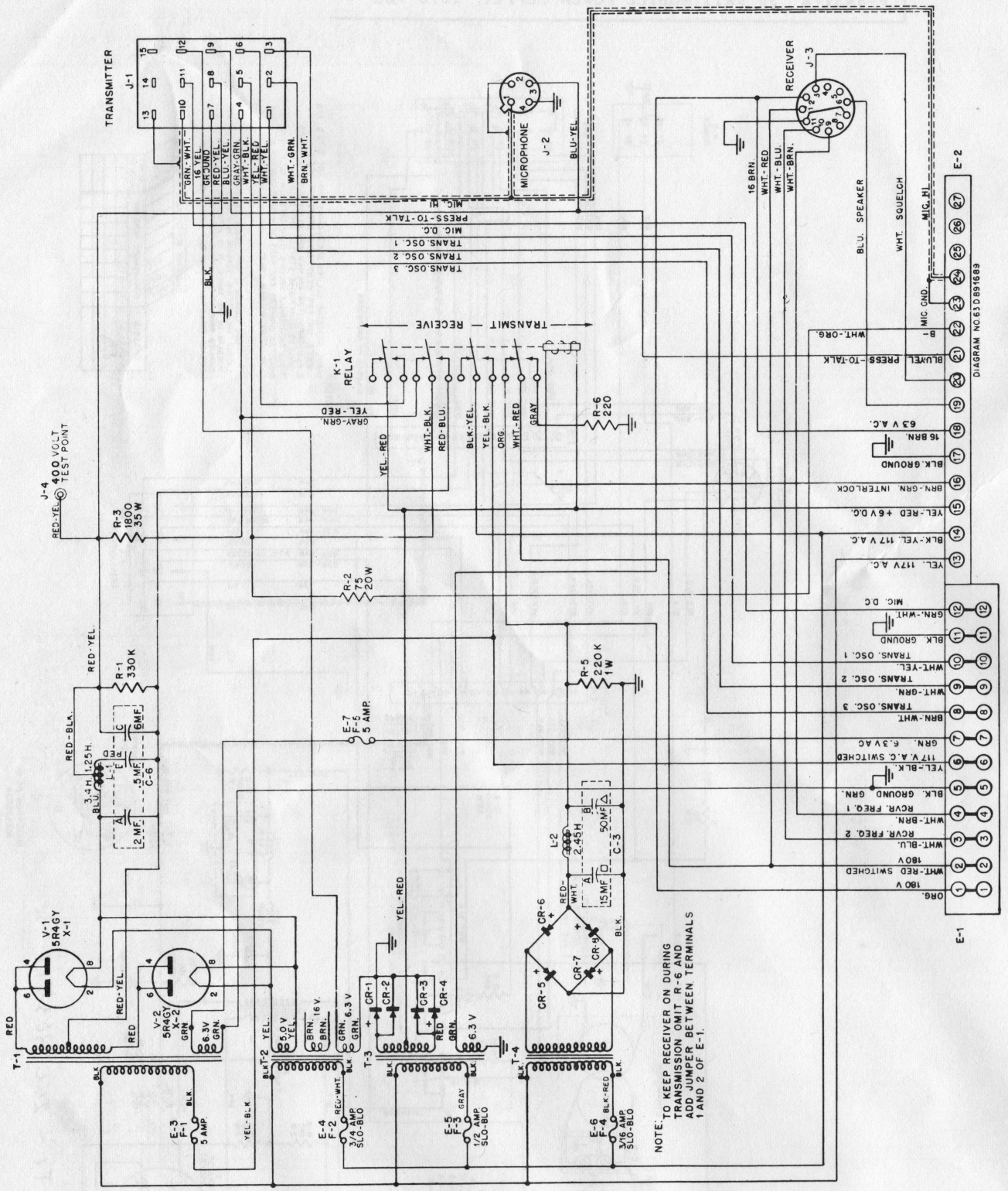

MOTOROLA SCHEMATIC DIAGRAM
P-8434 AC POWER SUPPLY CHASSIS

BASE STATION SUPPLY FOR
30 WATT TRANSMITTER

PART NO. 63D891689
ISSUE-H 10/51-CP

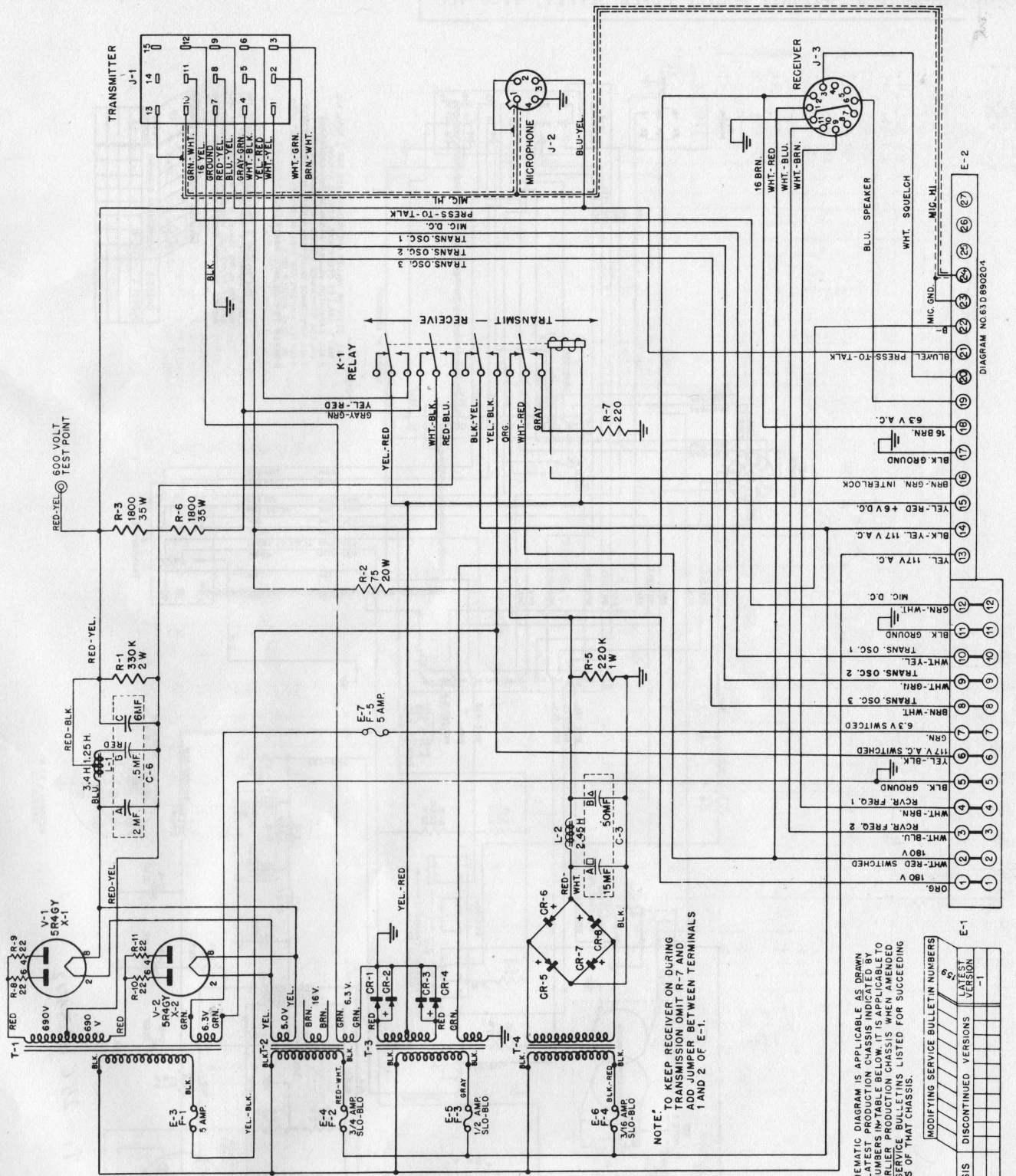

MOTOROLA SCHEMATIC DIAGRAM
P-8464 AC POWER SUPPLY CHASSIS

BASE STATION SUPPLY FOR
60 WATT TRANSMITTER

PART NO. 63D890204
ISSUE-K 10/51-CP

TU189 AC POWER SUPPLY SCHEMATIC DIAGRAM

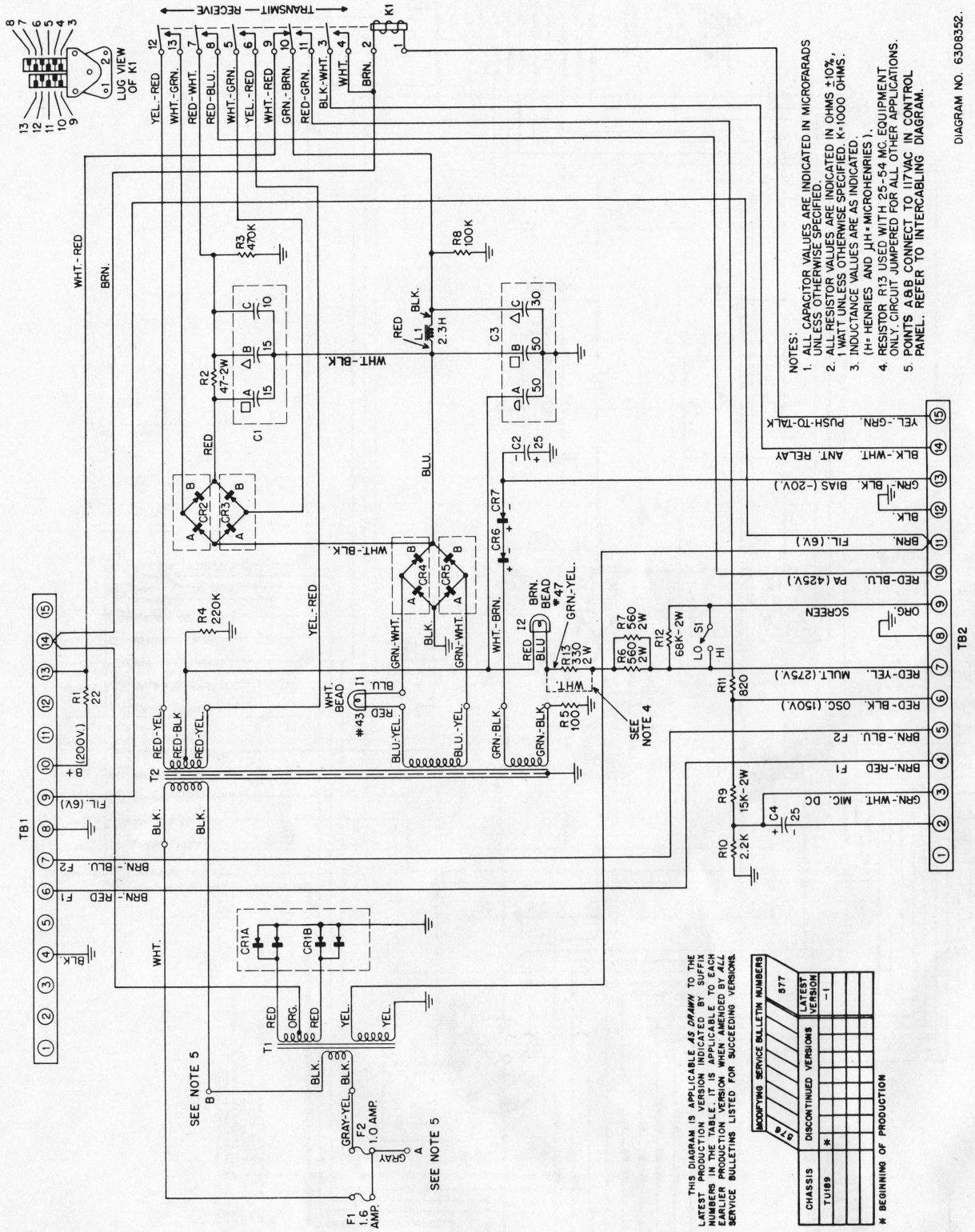

NOTES:
1. ALL CAPACITOR VALUES ARE INDICATED IN MICROFARADS UNLESS OTHERWISE SPECIFIED.
2. ALL RESISTOR VALUES ARE INDICATED IN OHMS ±10%, 1 WATT UNLESS OTHERWISE SPECIFIED. K=1000 OHMS.
3. INDUCTANCE VALUES ARE AS INDICATED. (H= HENRIES AND μH=MICROHENRIES).
4. RESISTOR R13 USED WITH 25-54 MC. EQUIPMENT ONLY. CIRCUIT JUMPERED FOR ALL OTHER APPLICATIONS.
5. POINTS A&B CONNECT TO 117 VAC IN CONTROL PANEL. REFER TO INTERCABLING DIAGRAM.

DIAGRAM NO. 63D8352.

THIS DIAGRAM IS APPLICABLE *AS DRAWN* TO THE LATEST PRODUCTION VERSION INDICATED BY SUFFIX NUMBERS IN THE TABLE. IT IS APPLICABLE TO EACH EARLIER PRODUCTION VERSION WHEN MODIFIED BY ALL SERVICE BULLETINS LISTED FOR SUCCEEDING VERSIONS.

CHASSIS	DISCONTINUED VERSIONS	LATEST VERSION
TU189	*	-1

MODIFYING SERVICE BULLETIN NUMBERS: 578, 577

* BEGINNING OF PRODUCTION

MOTOROLA
PART NO. 63D835279
ISSUE - A 10/54-RS

BASE STATION SUPPLY FOR "G" UNITS

MOTOROLA SCHEMATIC DIAGRAM
AC UTILITY TRANSMITTER-RECEIVER POWER SUPPLY

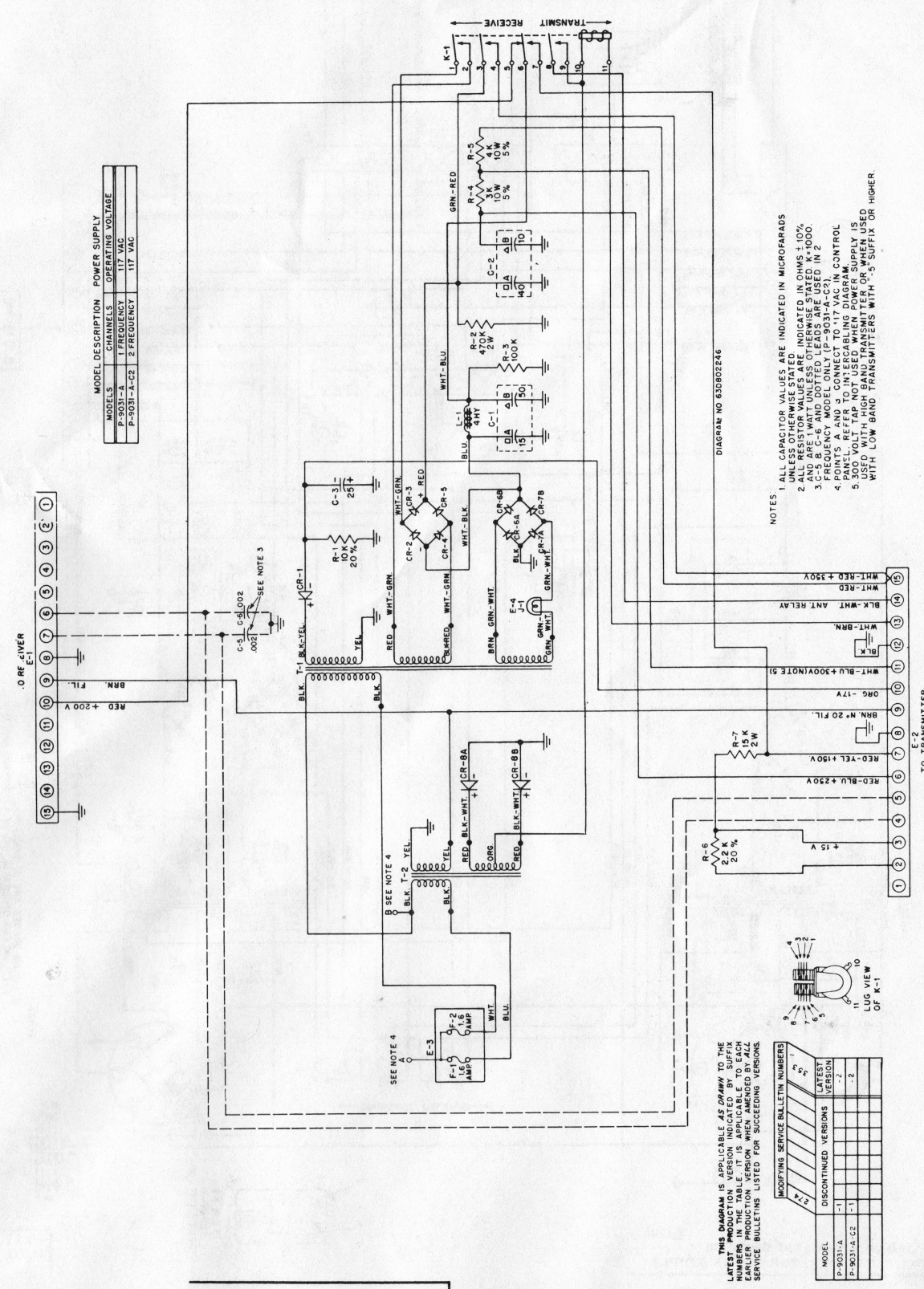

MODEL	DESCRIPTION	POWER SUPPLY OPERATING VOLTAGE
P-9031-A	1 FREQUENCY	117 VAC
P-9031-A-C2	2 FREQUENCY	117 VAC

NOTES:
1. ALL CAPACITOR VALUES ARE INDICATED IN MICROFARADS UNLESS OTHERWISE SPECIFIED.
2. ALL RESISTOR VALUES ARE INDICATED IN OHMS ± 10% AND ARE 1 WATT UNLESS OTHERWISE SPECIFIED. K=1000 AND MEG=1,000,000.
3. FREQUENCY MODEL ONLY (P-9031-A-C2).
4. FOR INTERCABLING DIAGRAM REFER TO CONTROL PANEL.
5. 300 VOLT TAP NOT USED WHEN POWER SUPPLY IS USED WITH HIGH BAND TRANSMITTERS WHICH USED WITH LOW BAND TRANSMITTERS WITH "5" SUFFIX OR HIGHER

DIAGRAM NO 63D802246

THIS DIAGRAM IS APPLICABLE *AS DRAWN* TO THE LATEST PRODUCTION VERSION INDICATED BY SUFFIX NUMBERS IN THE TABLE. IT IS APPLICABLE TO EACH EARLIER PRODUCTION VERSION WHEN MODIFIED BY ALL SERVICE BULLETINS LISTED FOR SUCCEEDING VERSIONS.

MODEL	DISCONTINUED VERSIONS	LATEST VERSION
P-9031-A	-1	-2
P-9031-A-C2	-1	-2

MODIFYING SERVICE BULLETIN NUMBERS: 7-72

PART NO. 63D802246
ISSUE-D 10/52-RS

BASE STATION SUPPLY FOR 41V UNITS

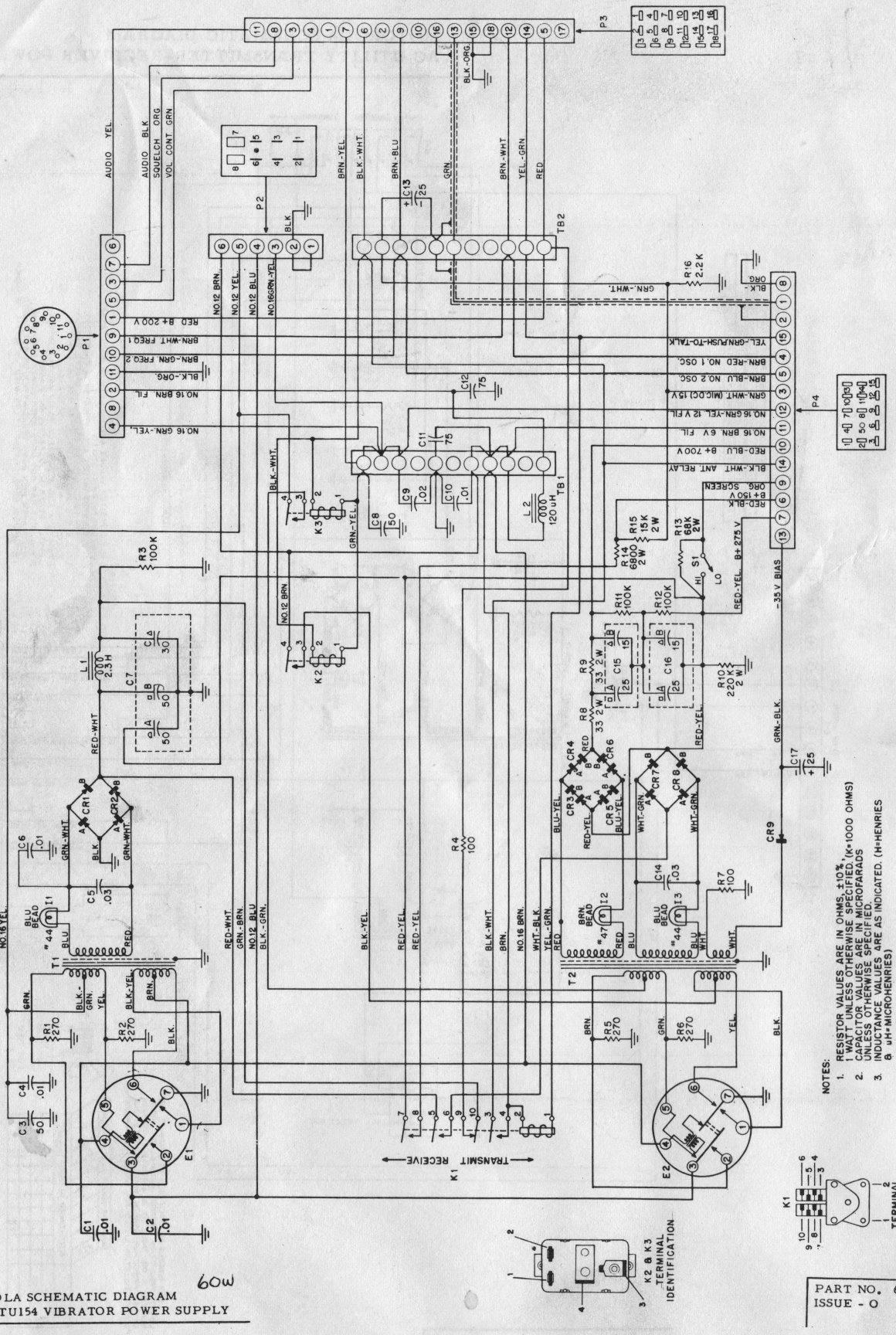

60W

MOTOROLA SCHEMATIC DIAGRAM
MODEL TU154 VIBRATOR POWER SUPPLY

PART NO. 63D831717
ISSUE - O 7/53-RS

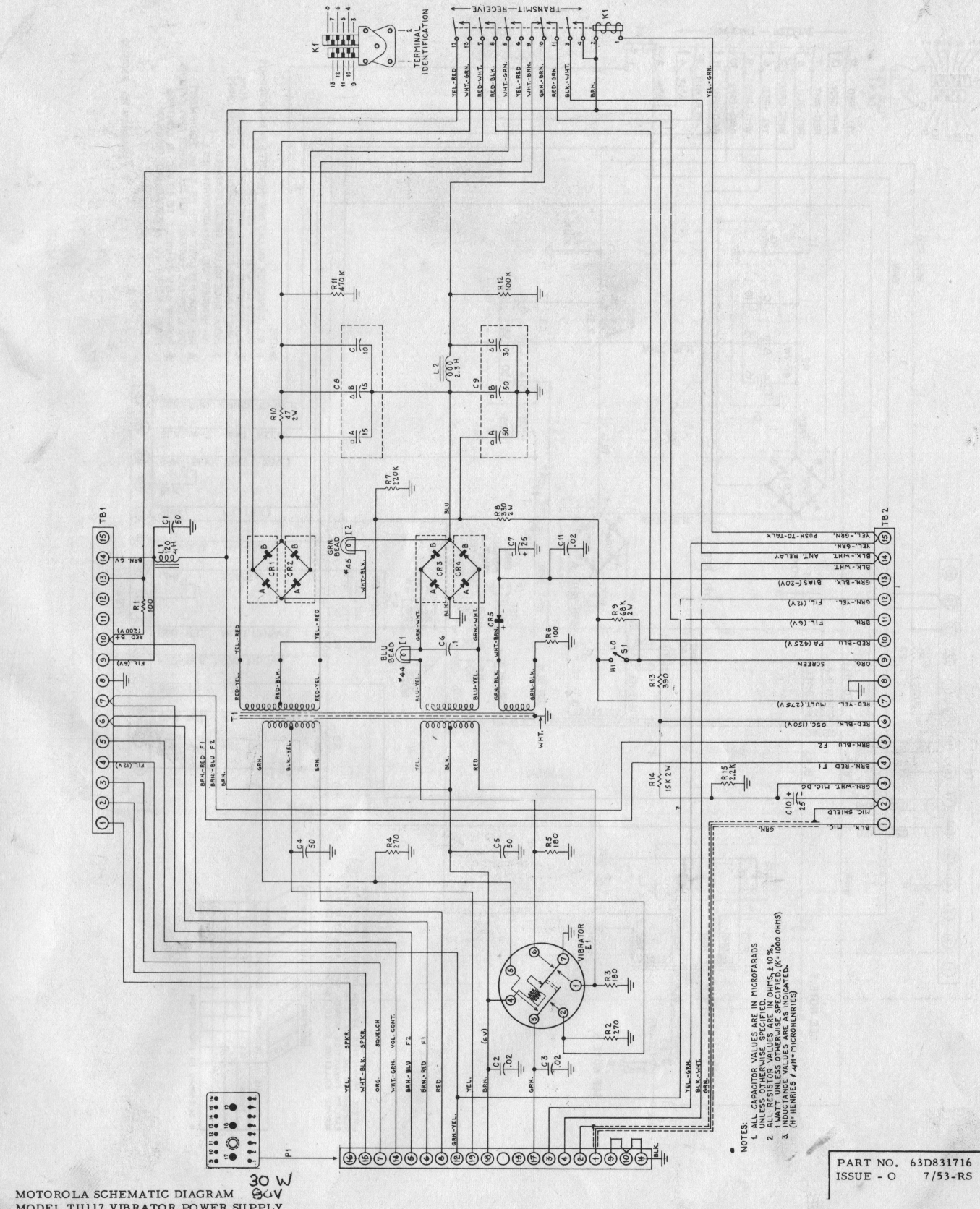

30 W 60V

MOTOROLA SCHEMATIC DIAGRAM
MODEL TU117 VIBRATOR POWER SUPPLY

PART NO. 63D831716
ISSUE - O 7/53-RS

06.

MODEL TU463 & TU463-S
PRIVATE LINE
POWER SUPPLY CHASSIS
SCHEMATIC DIAGRAM

NOTES
1. RESISTOR VALUES ARE IN OHMS, ±10%, UNLESS OTHERWISE INDICATED.
2. CAPACITOR VALUES ARE IN MICROFARADS UNLESS OTHERWISE INDICATED
3. RELAY K1 TERMINAL NUMBERS FOR REFERENCE PURPOSES ONLY TERMINALS 2,5,8,&11 ARE ACCESSIBLE FROM WIRING SIDE OF CHASSIS
4. CAPACITOR C15 (.01UF) IS USED ONLY IN MODEL TU463-S

MODEL	DESCRIPTION
TU463	PRIVATE LINE 117 VAC POWER SUPPLY (40KC)
TU463-S	PRIVATE LINE 117 VAC POWER SUPPLY (20KC)

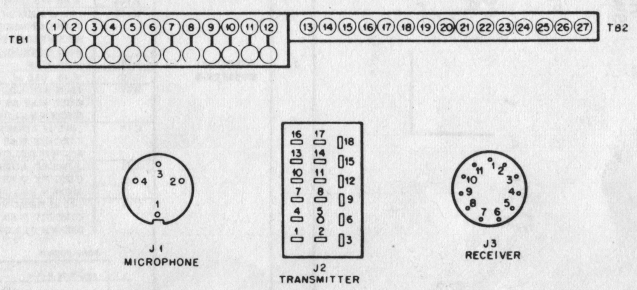

DIAG. NO. 63E852816

MOTOROLA
PART NO. 63E852816
ISSUE - B 10/57-RS

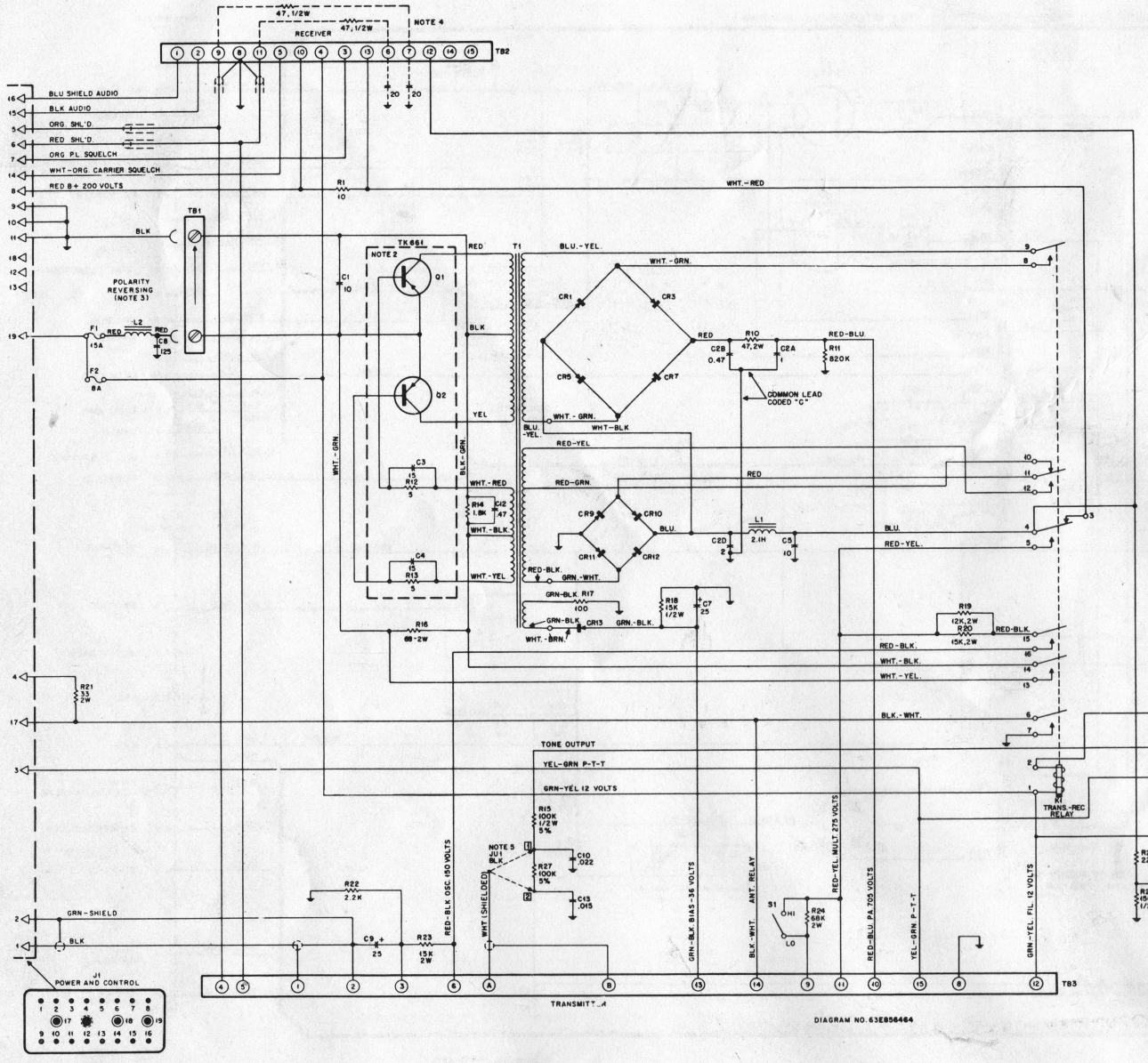

DIAGRAM NO. 63E856464

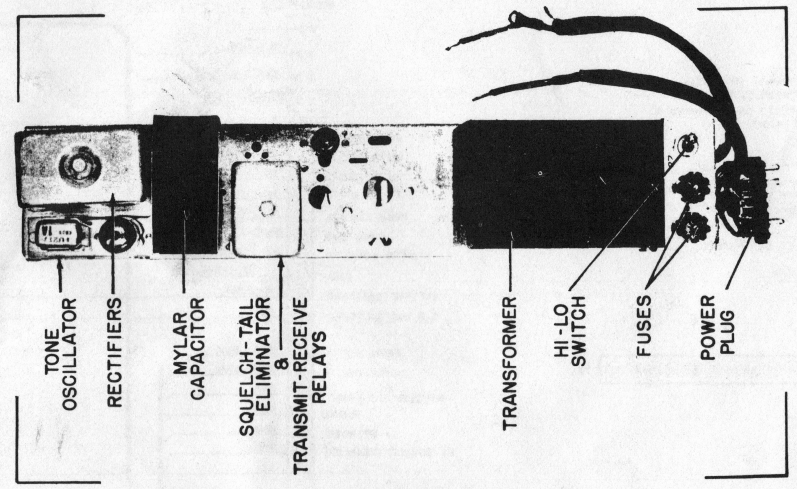

For 68P862740-O

Replace diagram 63E856464 with this diagram 63E856464-J.

REVISIONS

DIAG ISSUE	CHASSIS SUFFIX	REF. SYMBOL	CHANGE	LOCATION
H	TU588T-6 TU588TS-7		1V859763 MTG. BD. ASSEM., WAS REPLACED WITH 1V8656695 TERM. BD. ASSEM.	NON-REFERENCED PARTS LIST
		C11	WAS .022 uf	TB3-A
J	TU588T-7 TU588TS-8		VOLTAGE & RESISTANCE READINGS ADDED TO TONE OSC.	V101A & V101B
		C107	WAS .02 uf	TB101-4
		R104	WAS 680 OHM	V101A-9
		C108	.01 uf REMOVED, WAS CONNECTED BETWEEN V101B-2 AND GROUND.	V101B-2
		R15	WAS 270K	TB3-A
		C10	WAS .022 uf	
		R27	100K ADDED, CIRCUIT WAS AS SHOWN BELOW.	
		C13	.015 uf ADDED, CIRCUIT WAS AS SHOWN BELOW.	
		JU1	JUMPER ADDED, CIRCUIT WAS AS SHOWN BELOW.	
		C11	.01 uf REMOVED, CIRCUIT WAS AS SHOWN BELOW.	

MODEL TABLE

MODEL	CHAN. SPAN
TU588T-7	40KC
TU588TS-8	20KC
TX661-1	

NOTES:

1. UNLESS OTHERWISE SPECIFIED:
   ALL RESISTOR VALUES ARE IN OHMS, ±10%, ½WATT K=1000 OHMS.
   ALL CAPACITOR VALUES ARE IN MICROFARADS.
2. COMPONENTS ENCLOSED IN DASHED LINES ARE LOCATED ON FRONT PANEL.
3. POLARITY REVERSING TERMINALS SHOWN FOR NEGATIVE BATTERY GROUND (BLK TERMINAL TO ARROW). FOR POSITIVE BATTERY GROUND, REVERSE THE TWO TERMINALS (RED LEAD TO ARROW).
4. TLN6185A ROVR FILTER KIT IS PART OF 2-FREQ. RADIO SET ONLY. REFER TO INTERCABLING DIAGRAM FOR PARTS IDENTIFICATION.
5. JU1 CONNECTS TO POSITION 1 ON TU588T.
   JU1 CONNECTS TO POSITION 2 ON TU588TS.

TU588T and TU588TS Power Supply Schematic Diagram
Motorola No. 63E856464-J
2/2/60-UM

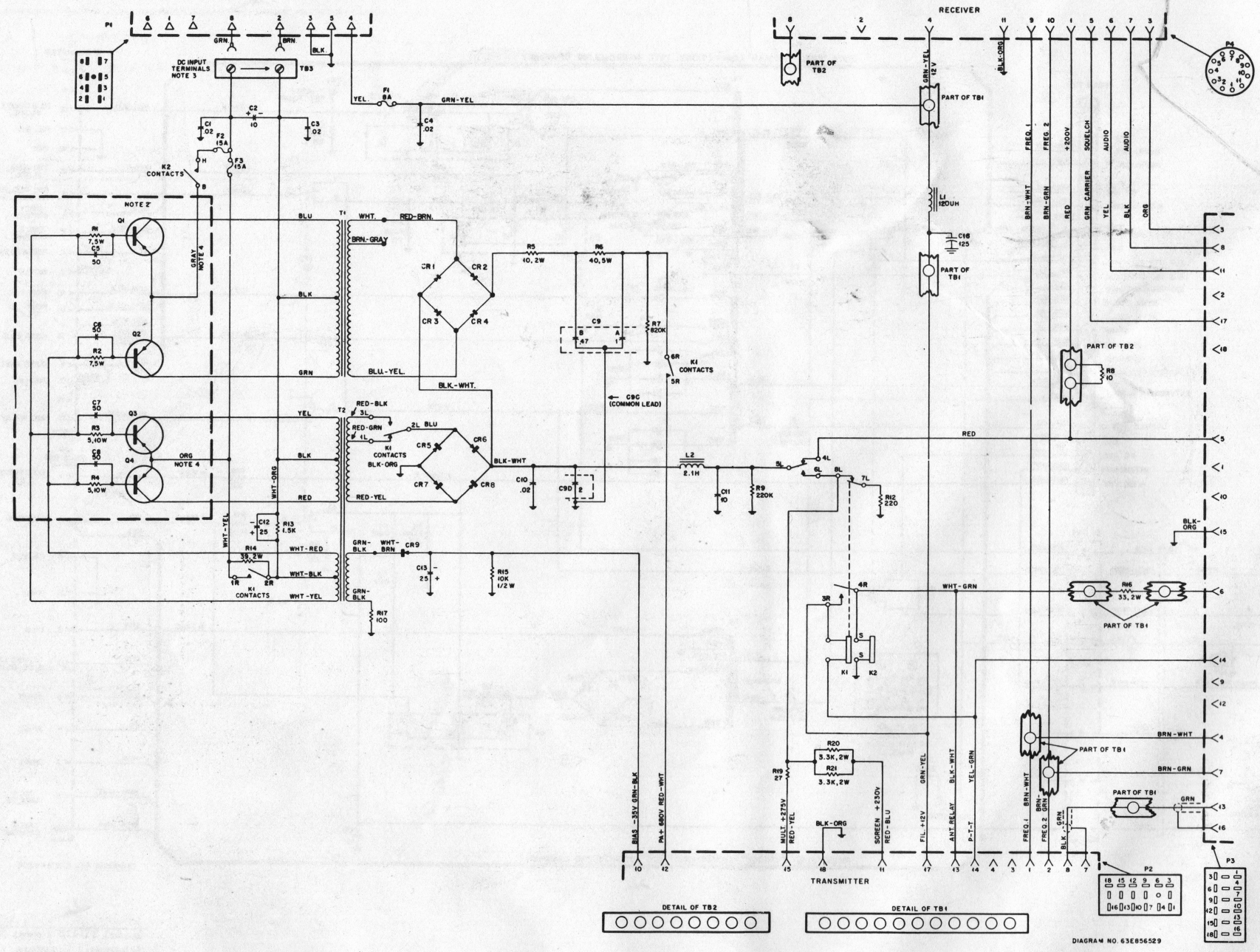

REVISIONS

DIAG. ISSUE	CHASSIS SUFFIX	REF. SYMBOL	CHANGE	LOCATION
E	TU590-3		1V859763 MTG. BD. ASSEM. WAS RE-PLACED WITH 1 1V865695 TERM. BD. ASSEM.	PARTS LIST NON-REFERENCE

NOTES:

1. UNLESS OTHERWISE SPECIFIED:
   ALL RESISTOR VALUES ARE IN OHMS, ±10%, 1 WATT, K=1000 OHMS.
   ALL CAPACITOR VALUES ARE IN MICROFARADS.
2. COMPONENTS ENCLOSED IN DASHED LINES ARE LOCATED ON RADIO SET FRONT PANEL.
3. PRIMARY DC INPUT TERMINALS SHOWN FOR NEGATIVE BATTERY GROUND, (BRN. LEAD TO ARROW). FOR POSITIVE BATTERY GROUND, REVERSE THE TWO TERMINALS (GRN LEAD TO ARROW).
4. THESE LEADS ARE INCLUDED AS PART OF THE TRANSFORMER(T1,T2)

MODEL TABLE

MODEL	DESCRIPTION
TU590-3	POWER SUPPLY

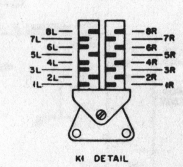

TU590 Power Supply
Schematic Diagram
Motorola No. 63E856529-E
11/16/59-RS

NOTES:

1. RESISTOR VALUES ARE IN OHMS, ±10% UNLESS OTHERWISE INDICATED.
2. CAPACITOR VALUES ARE IN MICROFARADS UNLESS OTHERWISE INDICATED.
3. RELAY K1 TERMINAL NUMBERS FOR REFERENCE PURPOSES ONLY. TERMINALS 2,5,8, & 11 ARE ACCESSIBLE FROM WIRING SIDE OF CHASSIS.
4. JUMPER JU1 USED FOR ROUGH ADJUSTMENT OF PRIVATE LINE TONE DEVIATION. IF TONE DEVIATION IS LESS THAN 1.0 KC, CORRECT BY REMOVING JU1. IF TONE DEVIATION EXCEEDS 1.7 KC, CORRECT BY ADDING JU1. IF TONE DEVIATION IS LESS THAN 1 KC AND JU1 IS ALREADY OUT, OR IF TONE DEVIATION EXCEEDS 1.7 KC AND JU1 IS ALREADY USED, CORRECT BY REPLACING 6AN8 TONE OSCILLATOR OR 6CB6 TRANSMITTER MODULATOR TUBE OR BOTH.

MODEL TABLE

MODEL	DESCRIPTION
TU430-2	AC POWER SUPPLY

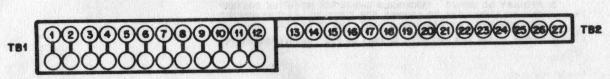

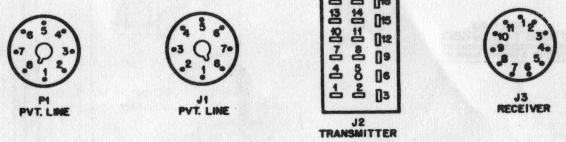

Model TU430 Power Supply
Schematic Diagram
Motorola No. 63E849816-B
10/58-CP

TU465 AND TU465-S "PRIVATE-LINE" POWER SUPPLY CHASSIS SCHEMATIC DIAGRAM

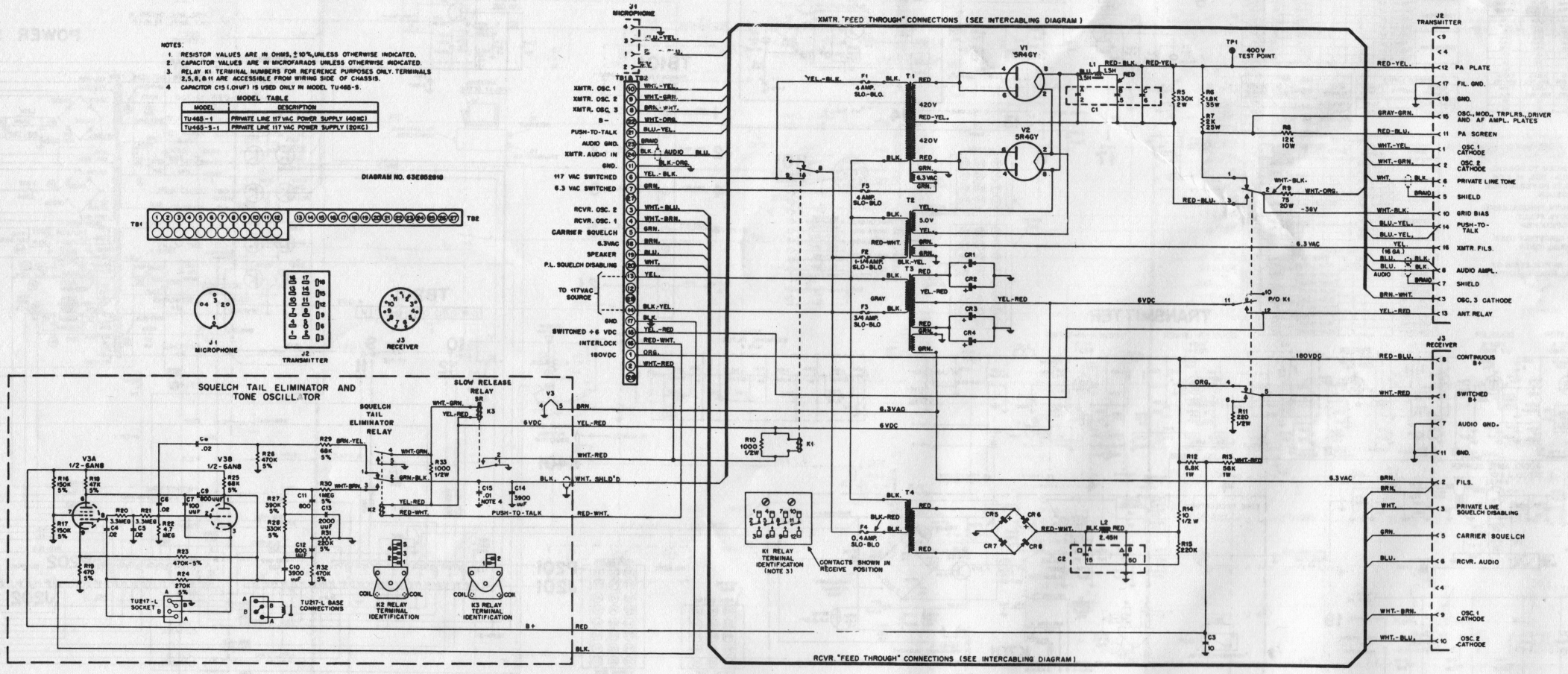

MOTOROLA
PART NO. 63E852818
ISSUE - A 2/58-UM

P-8238-C-4 HIGH VOLTAGE POWER SUPPLY AND RELAY CHASSIS SCHEMATIC DIAGRAM

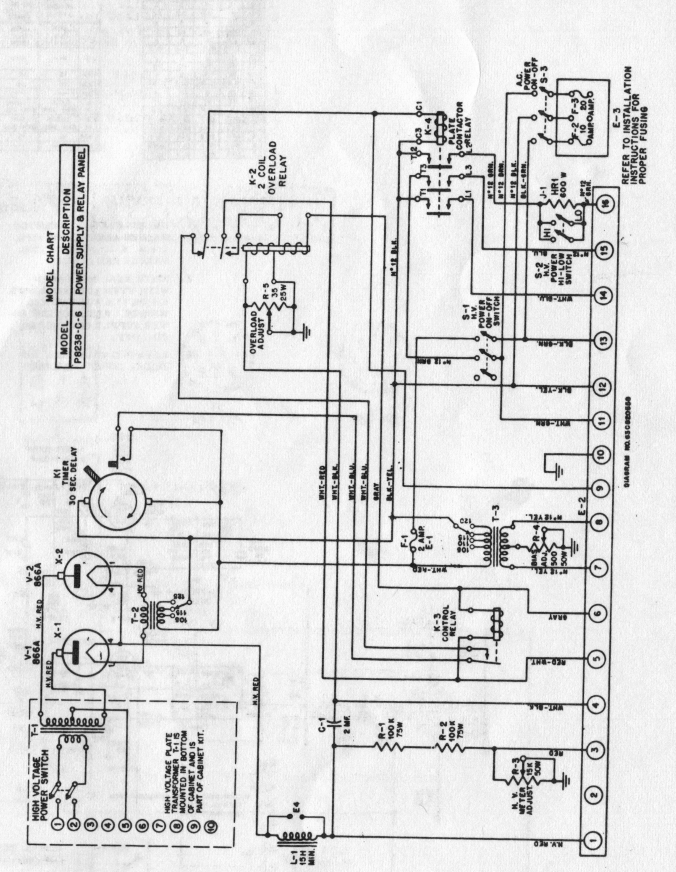

MOTOROLA
PART NO. 63C820558
ISSUE - F 2/58-UM

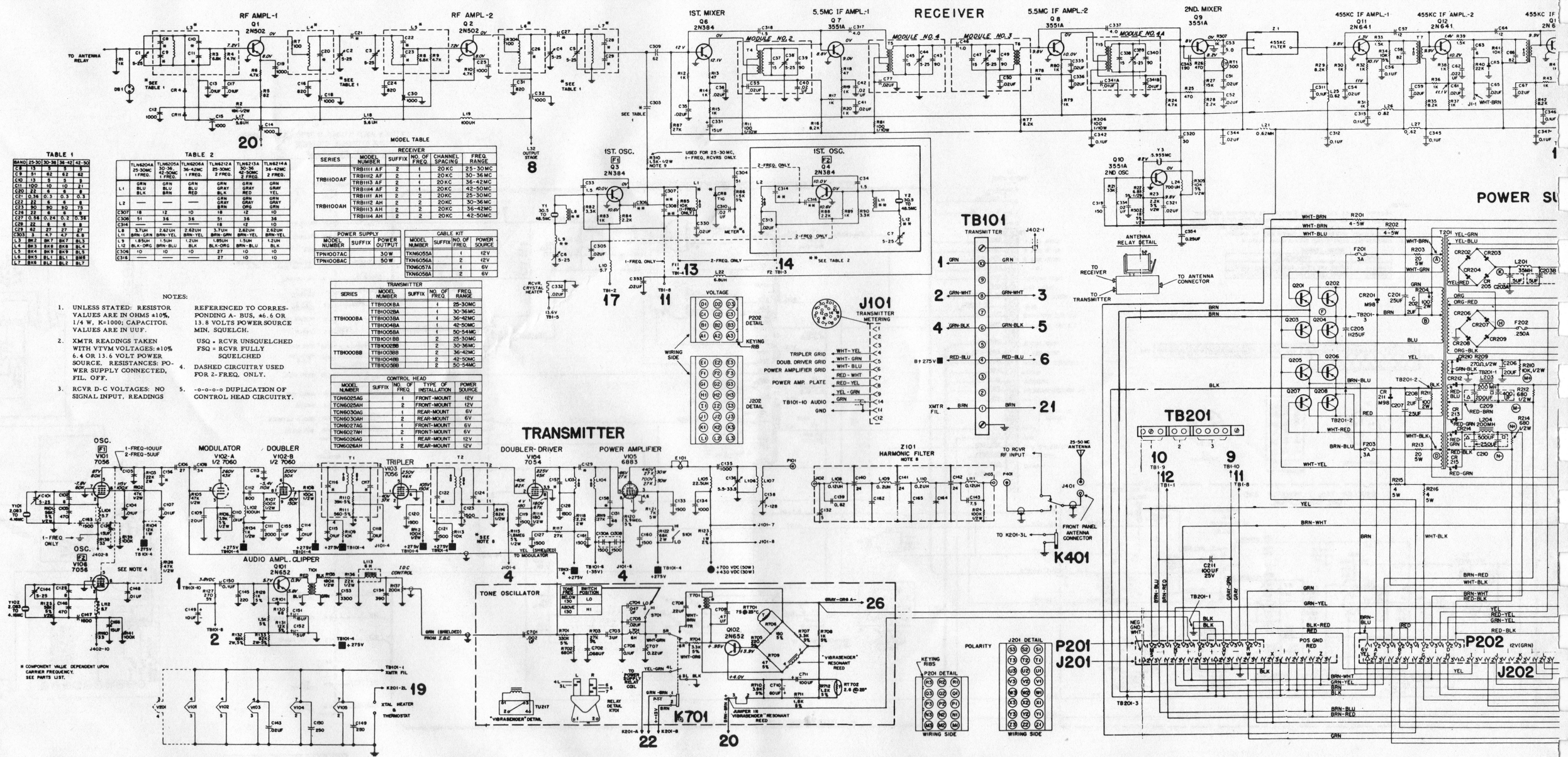
RECEIVER
TRANSMITTER
RF AMPL-1
RF AMPL-2
1ST. MIXER
5.5MC IF AMPL-1
5.5MC IF AMPL-2
2ND. MIXER
455KC IF AMPL-1
455KC IF AMPL-2
1ST. OSC.
OSC.
MODULATOR
DOUBLER
TRIPLER
DOUBLER- DRIVER
POWER AMPLIFIER
AUDIO AMPL. CLIPPER
TONE OSCILLATOR
Z101 HARMONIC FILTER
TB101 TRANSMITTER
TB201
J101 TRANSMITTER METERING
J201 DETAIL
P201
J201
P202
J202
K401
K701
POWER SU
TABLE 1
TABLE 2
MODEL TABLE
NOTES:
1. UNLESS STATED: RESISTOR VALUES ARE IN OHMS ±10%, 1/4 W, K=1000; CAPACITOR VALUES ARE IN UUF.
2. XMTR READINGS TAKEN WITH VTVM VOLTAGES: ±10% 6.4 OR 13.6 VOLT POWER SOURCE. RESISTANCES: POWER SUPPLY CONNECTED, FIL. OFF.
3. RCVR D-C VOLTAGES: NO SIGNAL INPUT, READINGS REFERENCED TO CORRESPONDING A- BUS, #6.6 OR 13.8 VOLTS POWER SOURCE MIN. SQUELCH.
4. USQ = RCVR UNSQUELCHED FSQ = RCVR FULLY SQUELCHED
4. DASHED CIRCUITRY USED FOR 2-FREQ. ONLY.
5. -o-o-o-o DUPLICATION OF CONTROL HEAD CIRCUITRY.

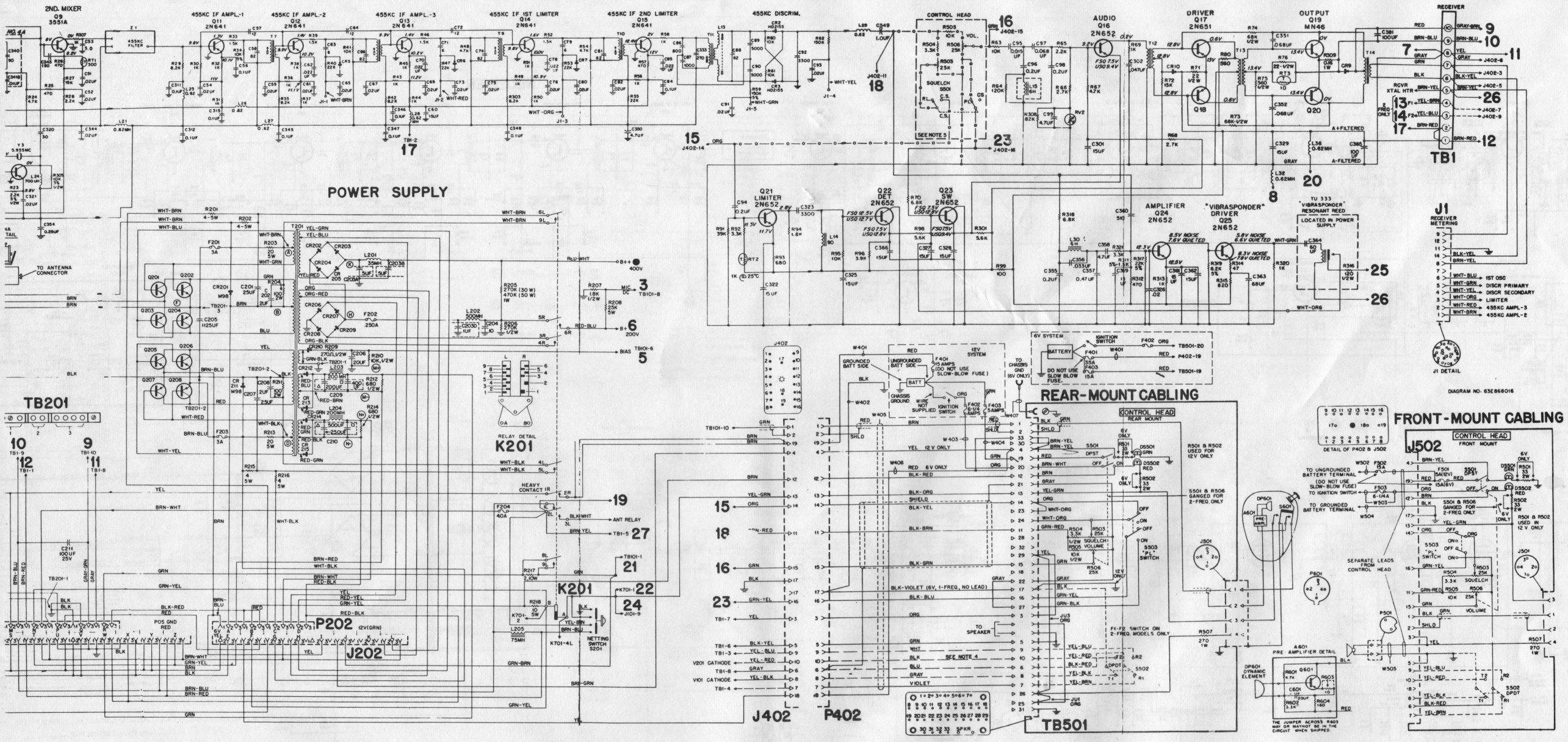

25-50 MC Dual Squelch "Private-Line"
"Motrac" Mobile Radio Set
30 & 50 Watts R-F Power
Schematic & Intercabling Diagram
Motorola No. 63E868016-B

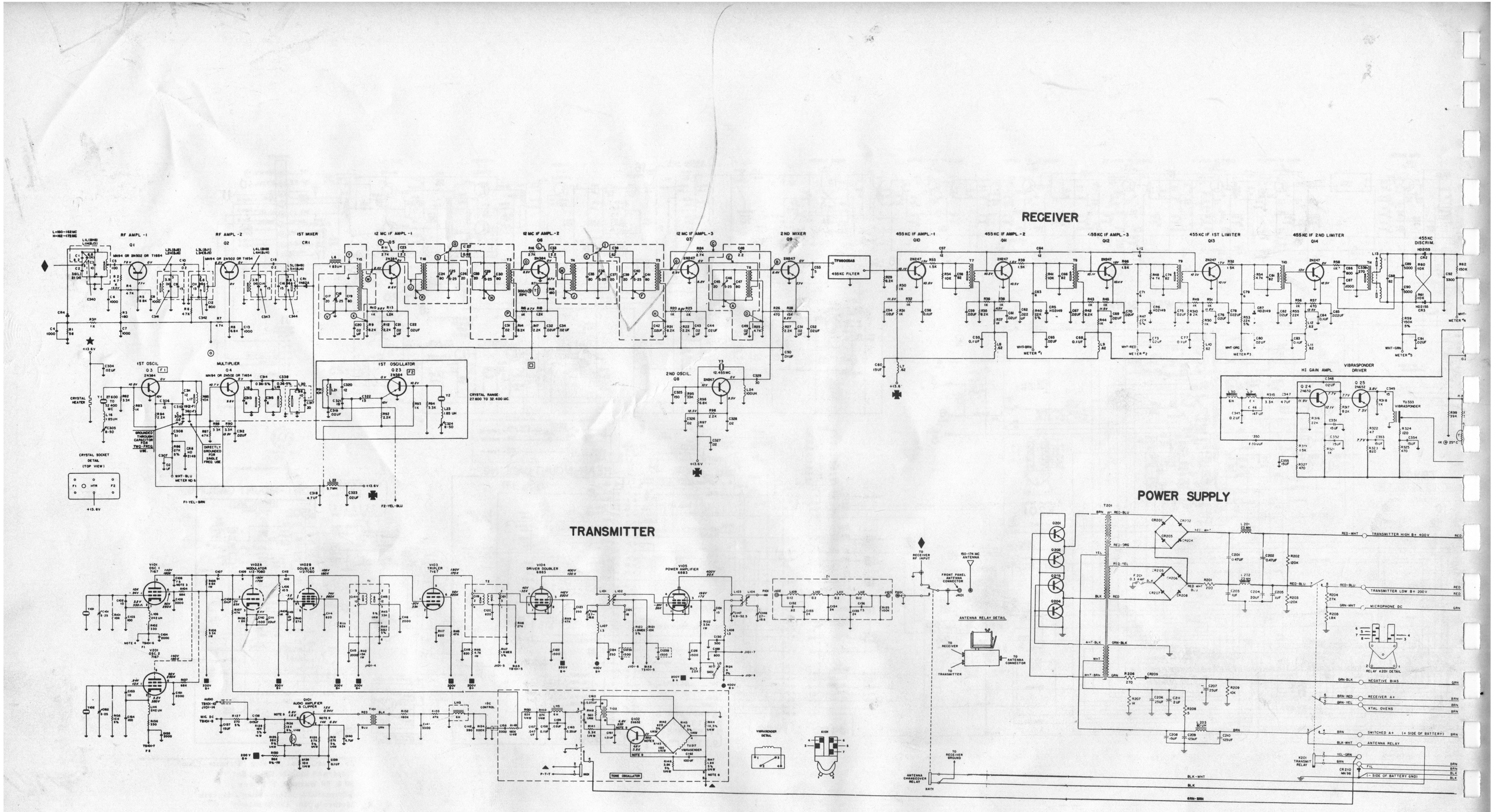
RECEIVER
RF AMPL - 1
RF AMPL - 2
1ST MIXER
12 MC IF AMPL - 1
12 MC IF AMPL - 2
12 MC IF AMPL - 3
2ND MIXER
455KC IF AMPL - 1
455KC IF AMPL - 2
455KC IF AMPL - 3
455KC IF 1ST LIMITER
455KC IF 2ND LIMITER
455KC DISCRIM.
455KC FILTER
1ST OSCIL
MULTIPLIER
1ST OSCILLATOR
2ND OSCIL.
CRYSTAL HEATER
CRYSTAL SOCKET DETAIL (TOP VIEW)
HI GAIN AMPL.
VIBRASPONDER DRIVER
TRANSMITTER
POWER SUPPLY
AUDIO AMPLIFIER & CLIPPER
TONE OSCILLATOR
ANTENNA RELAY DETAIL
FRONT PANEL ANTENNA CONNECTOR
TRANSMITTER HIGH B+ 400V
TRANSMITTER LOW B+ 200V
MICROPHONE DC
NEGATIVE BIAS
RECEIVER A+
XTAL OVENS
SWITCHED A+ (+ SIDE OF BATTERY)
ANTENNA RELAY
(- SIDE OF BATTERY GND)

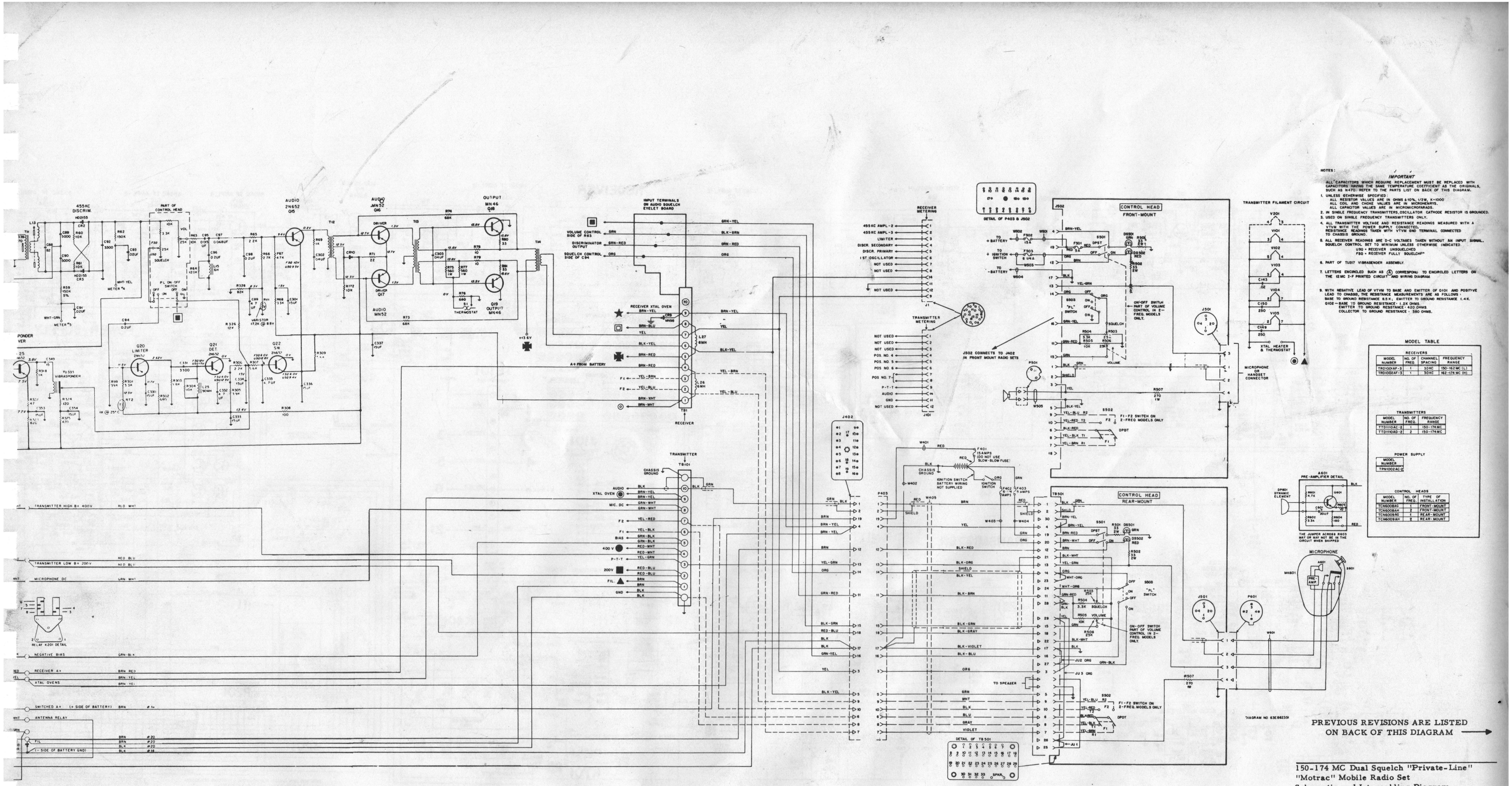

NOTES:

IMPORTANT

ALL CAPACITORS WHICH REQUIRE REPLACEMENT MUST BE REPLACED WITH CAPACITORS HAVING THE SAME TEMPERATURE COEFFICIENT AS THE ORIGINALS, SUCH AS N470. REFER TO THE PARTS LIST ON BACK OF THIS DIAGRAM.

1. UNLESS OTHERWISE SPECIFIED:
   ALL RESISTOR VALUES ARE IN OHMS & 10%, 1/2W, K=1000
   ALL COIL AND CHOKE VALUES ARE IN MICROHENRYS.
   ALL CAPACITOR VALUES ARE IN MICROMICROFARADS.
2. IN SINGLE FREQUENCY TRANSMITTERS, OSCILLATOR CATHODE RESISTOR IS GROUNDED.
3. USED ON SINGLE FREQUENCY TRANSMITTERS ONLY.
4. ALL TRANSMITTER VOLTAGE AND RESISTANCE READINGS MEASURED WITH A VTVM WITH THE POWER SUPPLY CONNECTED.
   RESISTANCE READINGS TAKEN WITH VTVM GND TERMINAL CONNECTED TO CHASSIS GROUND.
5. ALL RECEIVER READINGS ARE D-C VOLTAGES TAKEN WITHOUT AN INPUT SIGNAL, SQUELCH CONTROL SET TO MINIMUM UNLESS OTHERWISE INDICATED.
   USQ = RECEIVER UNSQUELCHED
   FSQ = RECEIVER FULLY SQUELCHED
6. PART OF TUS17 VIBRASENDER ASSEMBLY.
7. LETTERS ENCIRCLED SUCH AS (A) CORRESPOND TO ENCIRCLED LETTERS ON THE 12 MC I-F PRINTED CIRCUIT AND WIRING DIAGRAM.
8. WITH NEGATIVE LEAD OF VTVM TO BASE AND EMITTER OF Q101 AND POSITIVE LEAD TO CHASSIS, THE RESISTANCE MEASUREMENTS ARE AS FOLLOWS:
   BASE TO GROUND RESISTANCE 6.8 K.
   EMITTER TO GROUND RESISTANCE 1.4 K.
   Q102 - BASE TO GROUND RESISTANCE - 1.2K OHMS.
   EMITTER TO GROUND RESISTANCE - 620 OHMS.
   COLLECTOR TO GROUND RESISTANCE - 380 OHMS.

MODEL TABLE

RECEIVERS

MODEL NUMBER	NO. OF FREQ.	CHANNEL SPACING	FREQUENCY RANGE
TRD1002AF-3	1	50KC	150-162 MC (L)
TRD1002AF-5	1	50KC	162-174 MC (H)

TRANSMITTERS

MODEL NUMBER	NO. OF FREQ.	FREQUENCY RANGE
TTD1110AC-2	1	150-174 MC
TTD1110AD-2	2	150-174 MC

POWER SUPPLY

MODEL NUMBER
TPN1002AC-2

CONTROL HEADS

MODEL NUMBER	NO. OF FREQ.	TYPE OF INSTALLATION
TCN6008AG	1	FRONT-MOUNT
TCN6008AH	1	FRONT-MOUNT
TCN6009AG	1	REAR-MOUNT
TCN6009AH	2	REAR-MOUNT

PREVIOUS REVISIONS ARE LISTED ON BACK OF THIS DIAGRAM →

150-174 MC Dual Squelch "Private-Line" "Motrac" Mobile Radio Set
Schematic and Intercabling Diagram
Motorola No. 63E862351-G

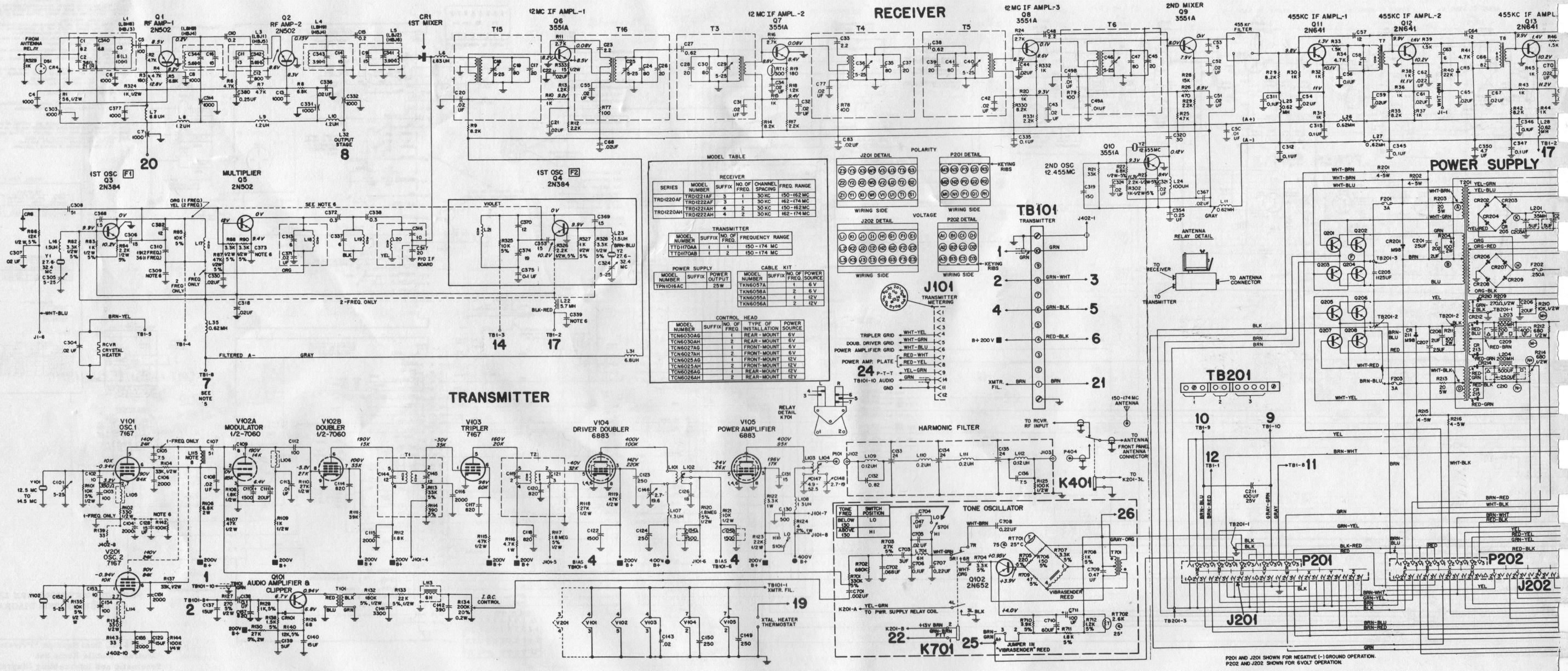
RECEIVER
TRANSMITTER
POWER SUPPLY
12MC IF AMPL.-1
12 MC IF AMPL.-2
12MC IF AMPL.-3
2ND MIXER
455KC IF AMPL.-1
455KC IF AMPL.-2
455KC IF AMPL.
1ST MIXER
1ST OSC F1
1ST OSC F2
MULTIPLIER
2ND OSC 12 455MC
RF AMP-1 2N502
RF AMP-2 2N502
MODEL TABLE
RECEIVER
TRANSMITTER
POWER SUPPLY
CABLE KIT
CONTROL HEAD
J101 TRANSMITTER METERING
TB101 TRANSMITTER
TB201
P201
P202
J201
J202
K401
K701
HARMONIC FILTER
TONE OSCILLATOR
ANTENNA RELAY DETAIL
RELAY DETAIL K701
V101 OSC.1 7167
V102A MODULATOR 1/2-7060
V102B DOUBLER 1/2-7060
V103 TRIPLER 7167
V104 DRIVER DOUBLER 6883
V105 POWER AMPLIFIER 6883
V201 OSC.2 7167
Q101 AUDIO AMPLIFIER & CLIPPER
Q102 2N652
P201 AND J201 SHOWN FOR NEGATIVE (-) GROUND OPERATION.
P202 AND J202 SHOWN FOR 6VOLT OPERATION.

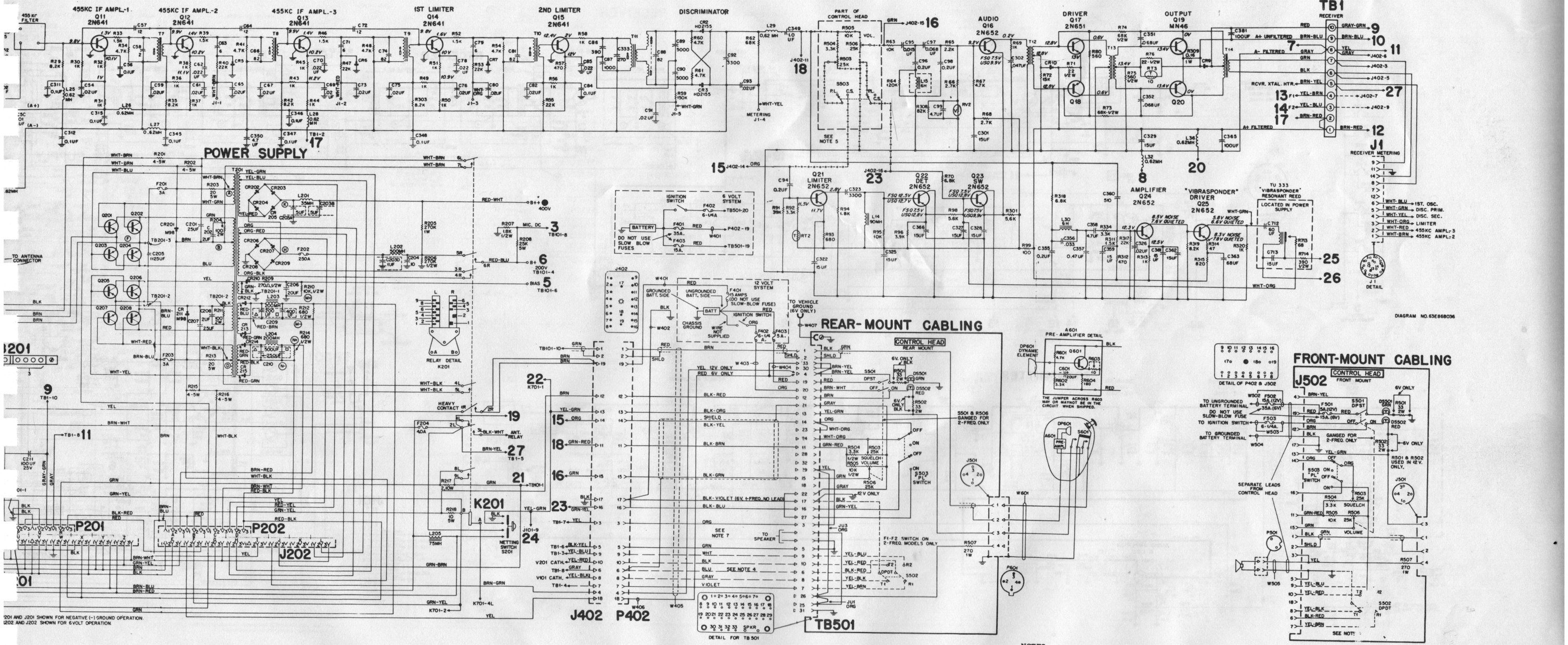

NOTES:

1. UNLESS STATED: RESISTOR VALUES ARE IN OHMS ±10%; 1/4 w, K=1000, CAPACITOR VALUES ARE IN UUF.
2. XMTR READINGS TAKEN WITH VTVM. VOLTAGES: ±10%; 6.4 OR 13.6 VOLT POWER SOURCE. RESISTANCES: POWER SUPPLY CONNECTED, FIL. OFF.
3. RCVR D-C VOLTAGES: NO SIGNAL INPUT, READINGS REFERENCED TO CORRESPONDING A- BUS, ±6.6 OR 13.8 VOLTS POWER SOURCE, MIN. SQUELCH.

   USQ = RCVR UNSQUELCHED
   FSQ = RCVR FULLY SQUELCHED
4. DASHED CIRCUITRY USED FOR 2-FREQ. ONLY.
5. -o-o-o-o DUPLICATION OF CONTROL HEAD CIRCUITRY.
6. SEE PARTS LIST FOR COMPONENT VALUES FOR ONE AND TWO FREQUENCY OPERATIONS.
7. USED IN 6 VOLT CONTROL HEADS ONLY. POLAIRTY SHOWN FOR NEGATIVE GROUND. REVERSE POLARITY FOR POSITIVE GROUND.

25 Watt "Motrac" Mobile Radio Set
Schematic and Intercabling Diagram
Motorola No. 63E868036-E
5/10/60-UM

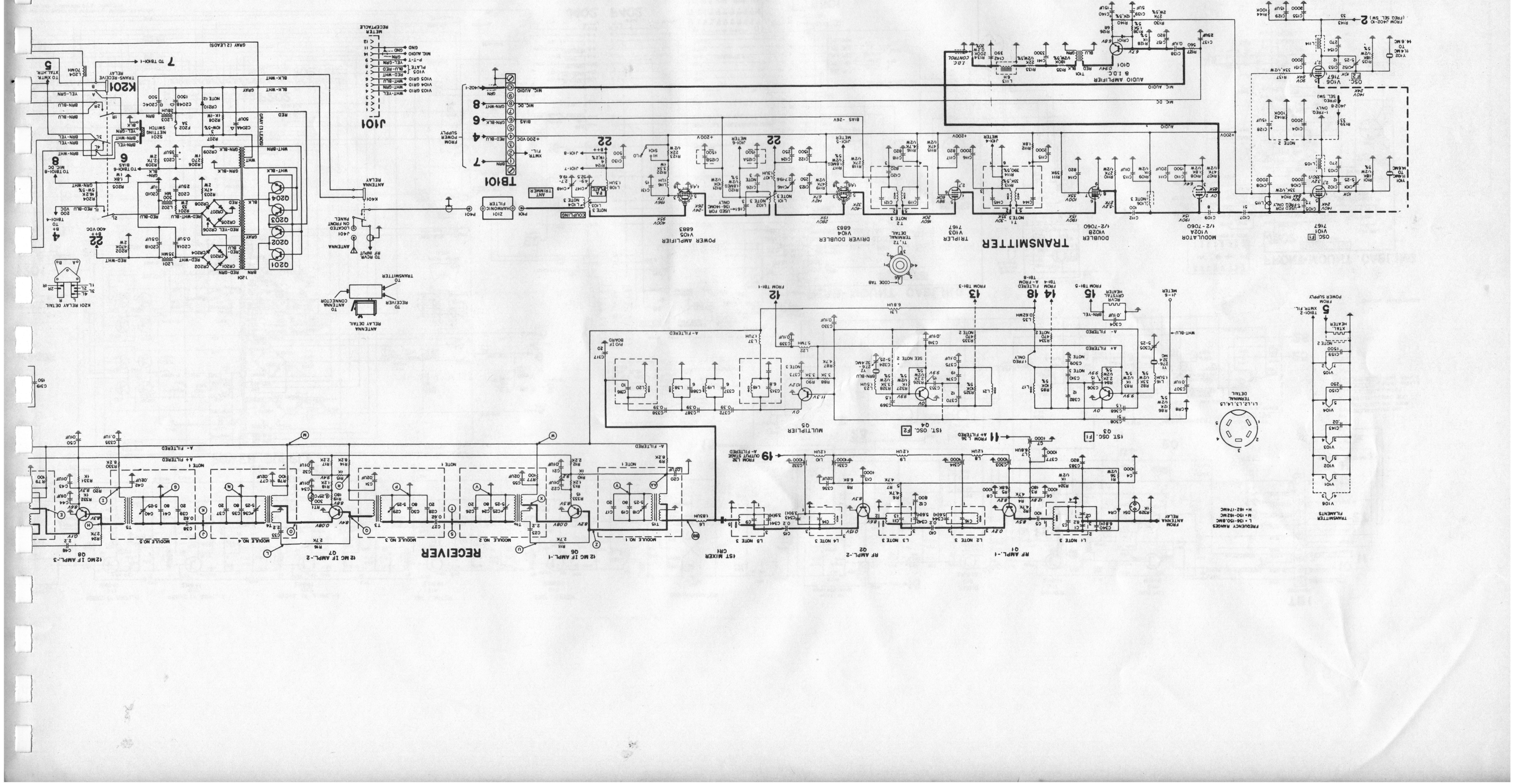
TRANSMITTER
RECEIVER
TB101
J101
K101
K201
K401
Q201
Q202
Q203
Q204
Q401
Q402
TRANSMITTER PILLAR 5
OSC. Q1
MODULATOR V102A
DOUBLER V102B
TRIPLER V103
DRIVER DOUBLER V104
POWER AMPLIFIER V105
AUDIO AMPLIFIER & I.C. Q101
1ST OSC. Q3
MULTIPLIER Q5
RF AMPL.-1 Q1
RF AMPL.-2 Q2
1ST MIXER CR1
12 MC IF AMPL.-1 Q6
12 MC IF AMPL.-2 Q7
12 MC IF AMPL.-3 Q8
MODULE NO. 1
MODULE NO. 2
MODULE NO. 3
MODULE NO. 4
ANTENNA RELAY
ANTENNA RELAY DETAIL
K201 RELAY DETAIL
METER
ANTENNA COUPLER
ANTENNA CONNECTOR
TO TRANSMITTER
TO RECEIVER
TO ANTENNA
TO XMTR.
TO RCVR. RF INPUT
TO RCVR. IF OUTPUT
TO RCVR. AUDIO OUTPUT
TO RCVR. AGC
TO RCVR. BFO
TO RCVR. MUTING
TO RCVR. SQUELCH
TO RCVR. CRYSTAL CALIBRATOR
TO RCVR. 1ST OSC. INJECTION
TO RCVR. 1ST MIXER INJECTION
TO RCVR. 12 MC IF AMPL.-1 INJECTION
TO RCVR. 12 MC IF AMPL.-2 INJECTION
TO RCVR. 12 MC IF AMPL.-3 INJECTION
TO RCVR. A.V.C.
TO RCVR. S METER
TO RCVR. NOISE LIMITER
TO RCVR. PHASING
TO RCVR. BFO PITCH
TO RCVR. AUDIO GAIN
TO RCVR. RF GAIN
TO RCVR. IF GAIN
TO RCVR. MUTING GAIN
TO RCVR. SQUELCH GAIN
TO RCVR. CRYSTAL CALIBRATOR GAIN
TO RCVR. 1ST OSC. INJECTION GAIN
TO RCVR. 1ST MIXER INJECTION GAIN
TO RCVR. 12 MC IF AMPL.-1 INJECTION GAIN
TO RCVR. 12 MC IF AMPL.-2 INJECTION GAIN
TO RCVR. 12 MC IF AMPL.-3 INJECTION GAIN
TO RCVR. A.V.C. GAIN
TO RCVR. S METER GAIN
TO RCVR. NOISE LIMITER GAIN
TO RCVR. PHASING GAIN
TO RCVR. BFO PITCH GAIN

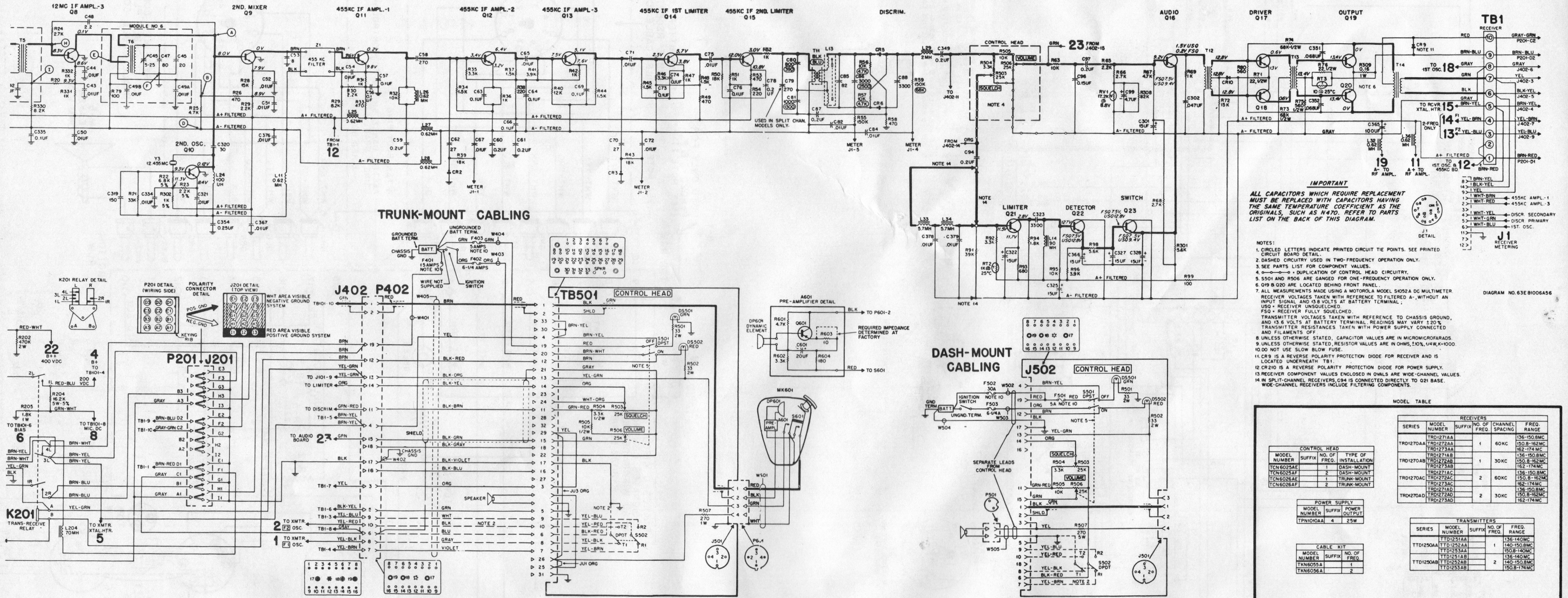

136-174 MC, 25 W, ±12 V Carrier Squelch
"Motrac" Radio Set
Schematic & Intercabling Diagram
Motorola No. 63E81006A56-H

MOTOROLA SCHEMATIC DIAGRAM
P-9231-A & P-9231-A-C2P2 VIBRATOR POWER SUPPLY, 6.3 VDC for 80D

When converting this power supply to 12V for operation in a Mobile, both the transmitter and receiver filaments should be rewired in accordance with the 12V filament sketch shown on the appropriate transmitter and receiver schematics.

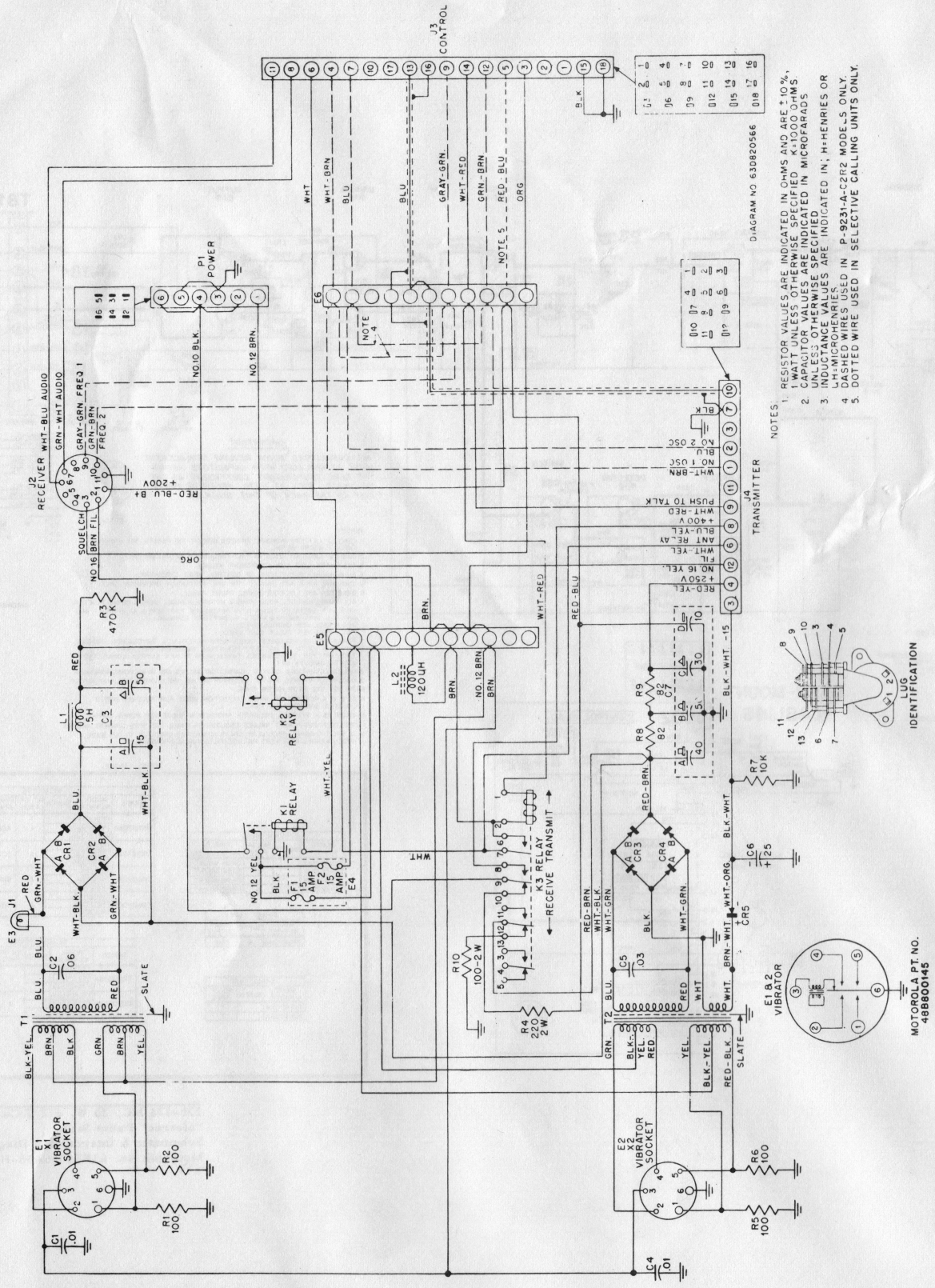

PART NO. 63D820566
ISSUE-A 6/52-RS

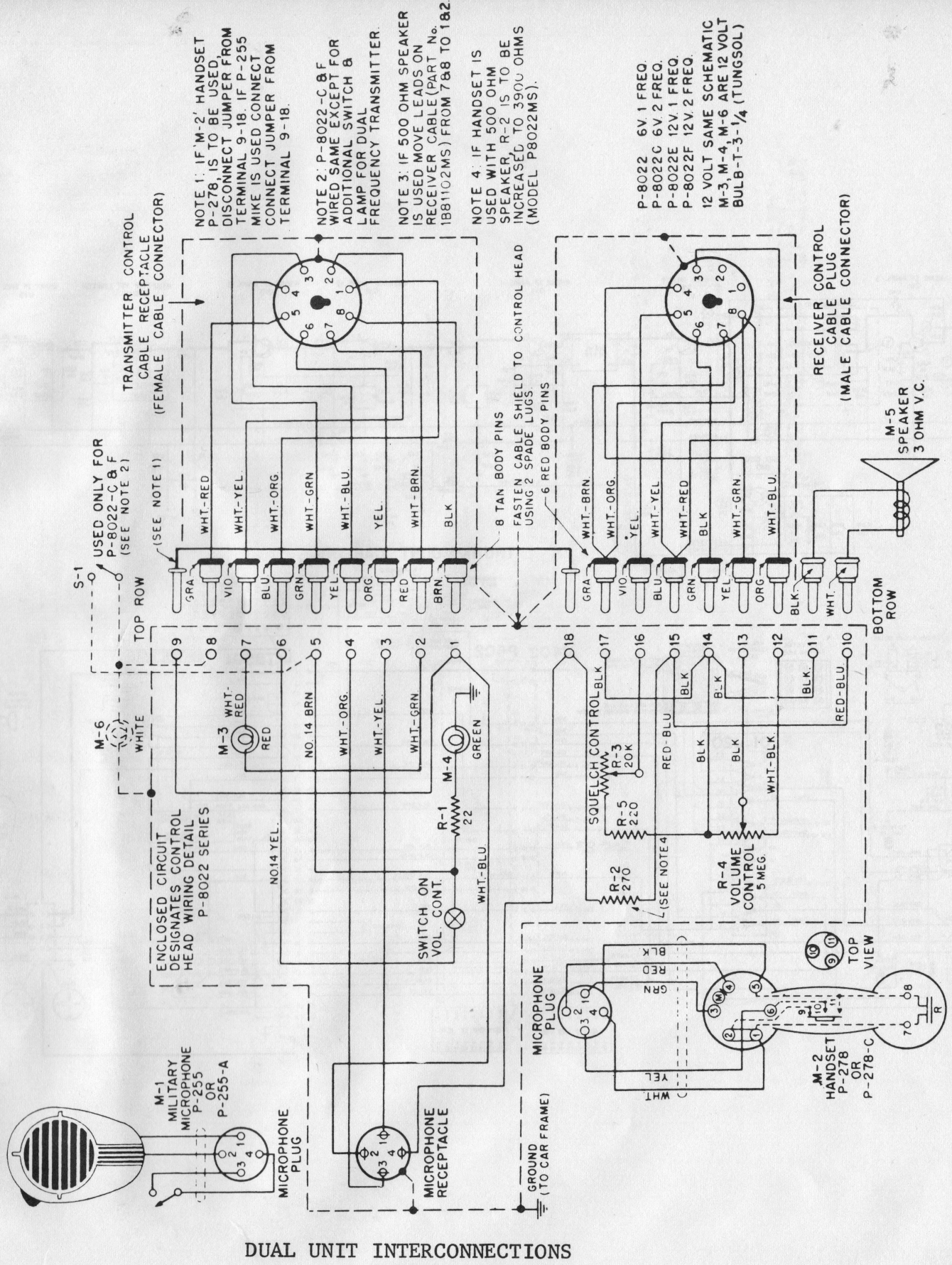

DUAL UNIT INTERCONNECTIONS

NOTES:

1. IF HANDSET P-278 OR P-278-C IS USED, JUMPER JU-1 ON CONTROL HEAD IS NOT USED. IF P-255 OR P-255-A IS USED, JUMPER JU-1 ON CONTROL HEAD IS USED.
2. TWO FREQUENCY SWITCH S-3 IS INCLUDED ON MODELS P-8522-A AND P-8522-C ONLY.
3. USE OF CONTROL HEADS

MODEL	MICROPHONE OR HANDSET USED	FREQ
P-8522	P-255 OR P-255-A	ONE
P-8522-A	P-255 OR P-255-A	TWO
P-8522-B	P-278 OR P-278-C	ONE
P-8522-C	P-278 OR P-278-C	TWO

4. JUMPER JU-1 ON TRANSMITTER REMOVED FOR ZERO FILAMENT STANDBY WHERE APPLICABLE.

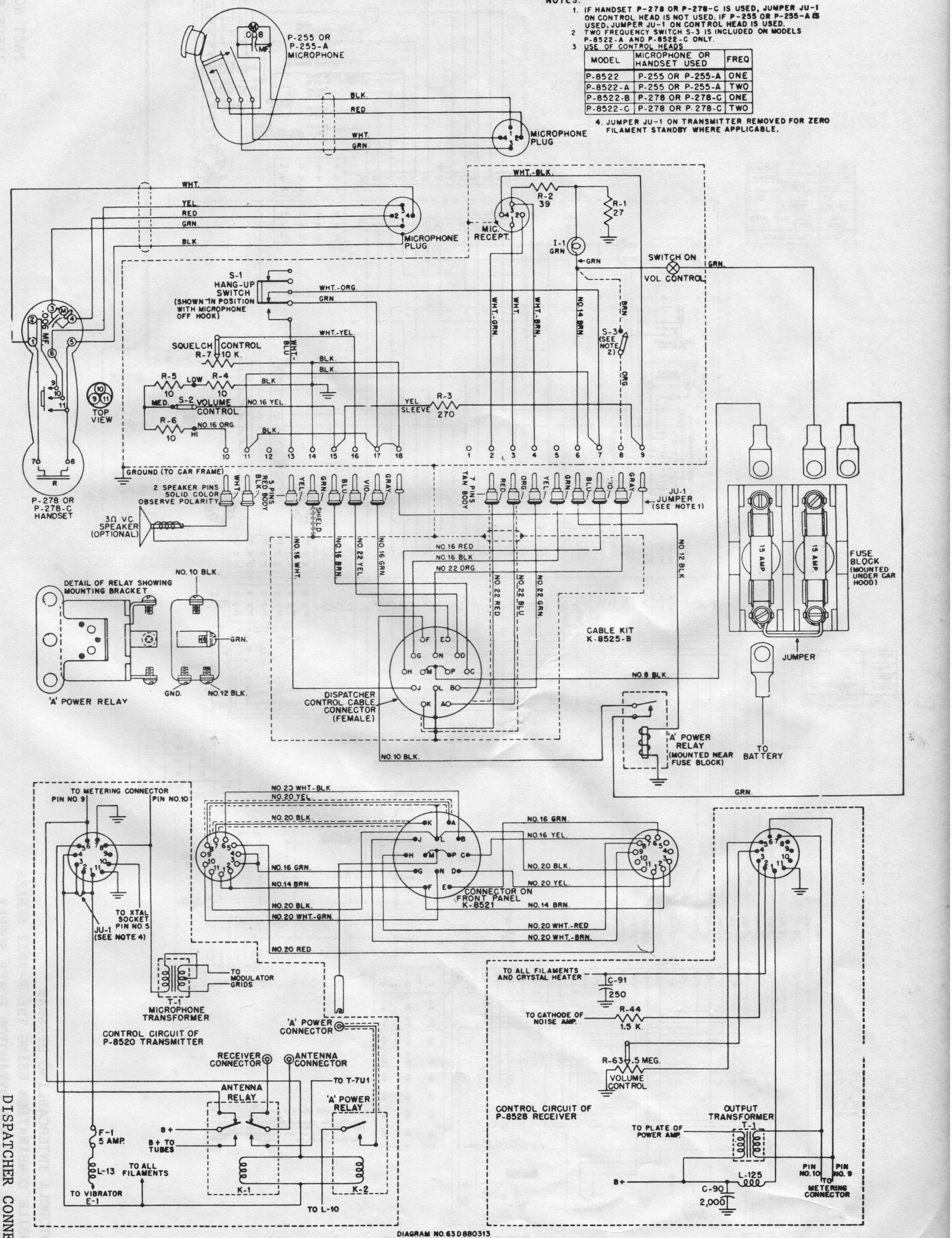

DIAGRAM NO.63D880313

REFER TO INDIVIDUAL SCHEMATIC FOR COMPLETE DETAILS OF EACH CHASSIS

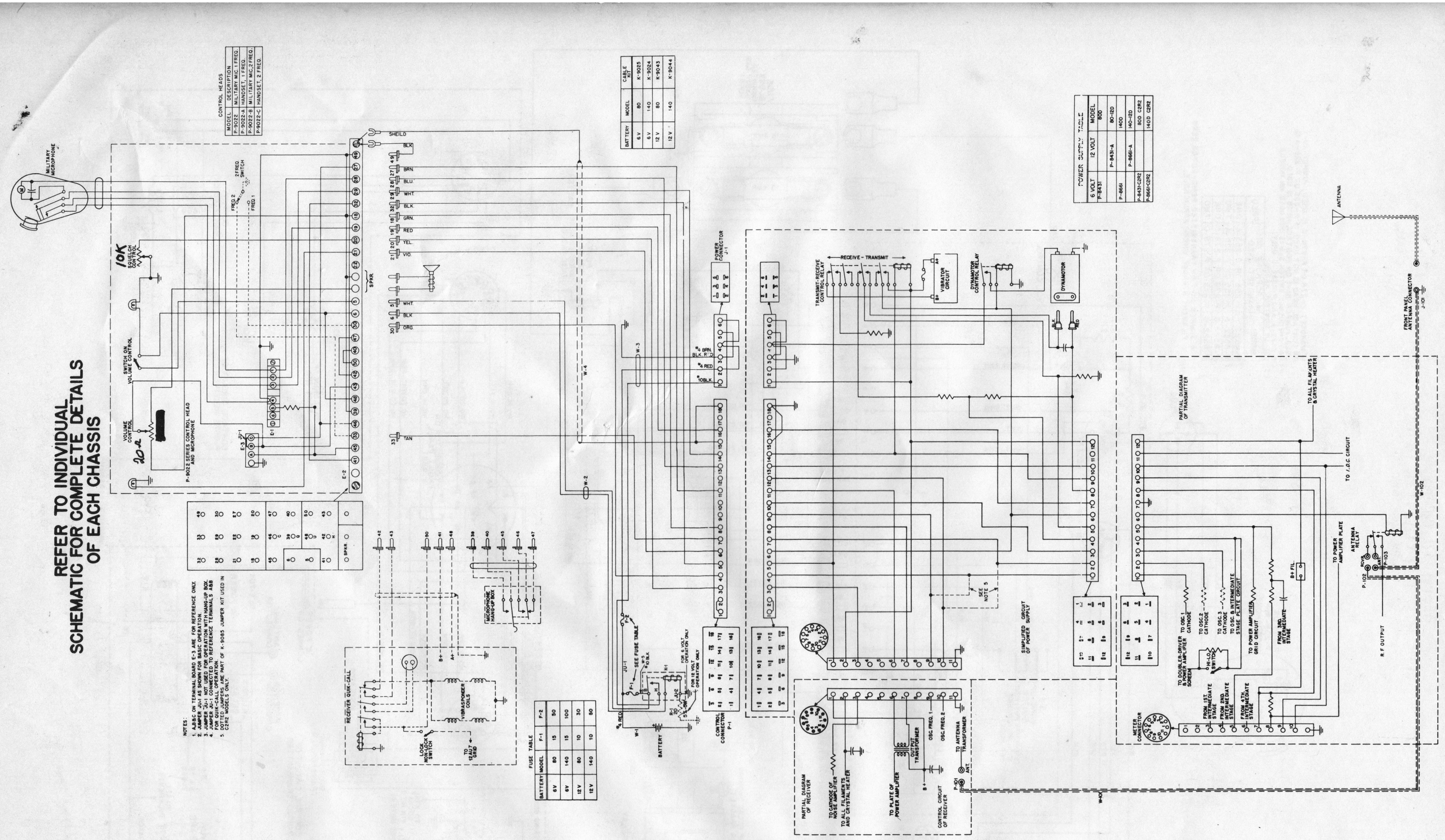

MOTOROLA INTERCABLING DIAGRAM
MOBILE COMBINATION USING THE P-9022 SERIES
CONTROL HEAD AND DYNAMOTOR POWER SUPPLY

PART NO. 63E800270
ISSUE-F 12/51-RS

MOTOROLA INTERCABLING DIAGRAM
REAR MOUNT TRANSMITTER-RECEIVER MODELS

REFER TO INDIVIDUAL SCHEMATIC FOR COMPLETE DETAILS OF EACH CHASSIS

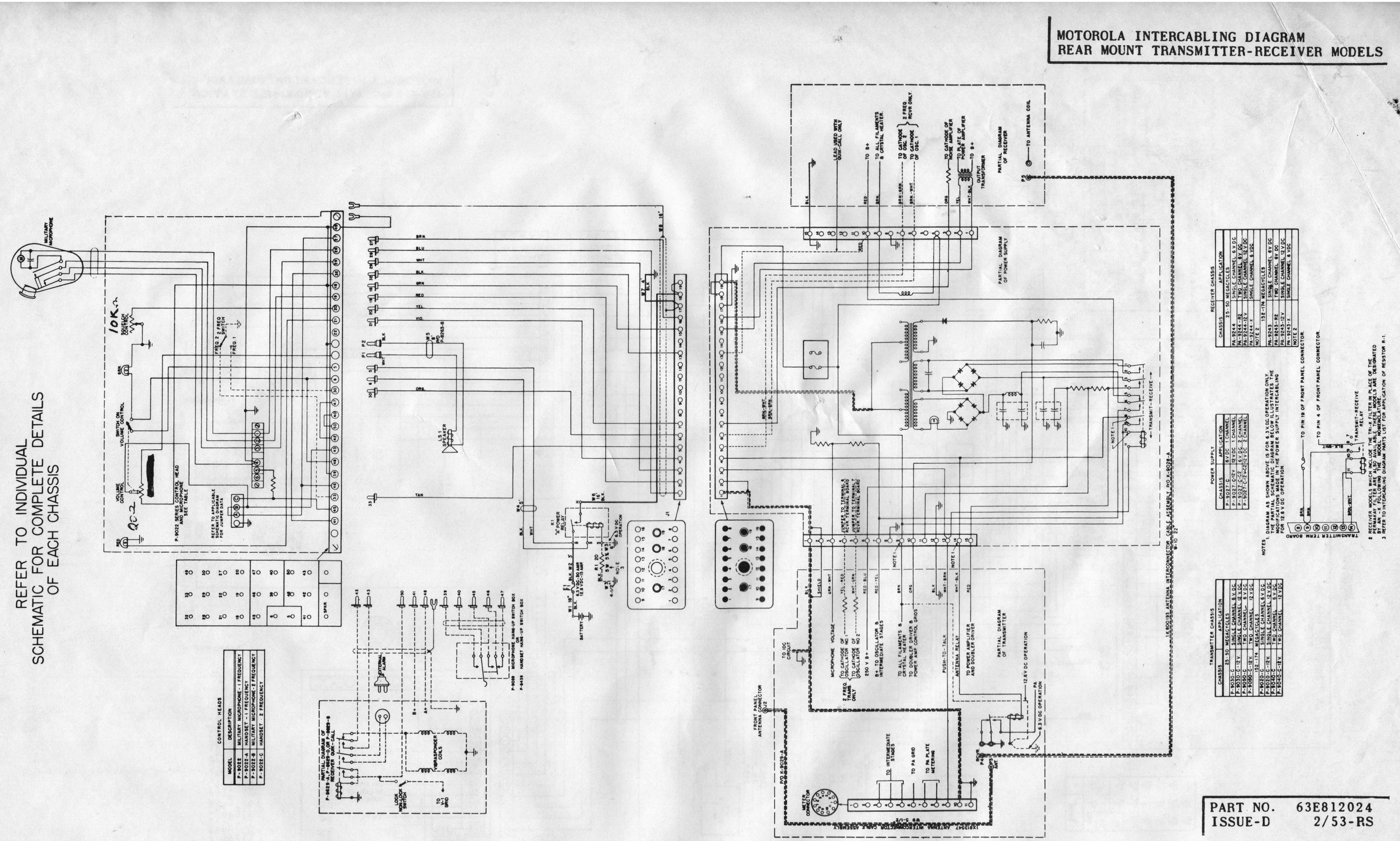

PART NO. 63E812024
ISSUE-D 2/53-RS

MOTOROLA INTERCABLING DIAGRAM
450-470 MC. 6/12 VDC MOBILE STATION

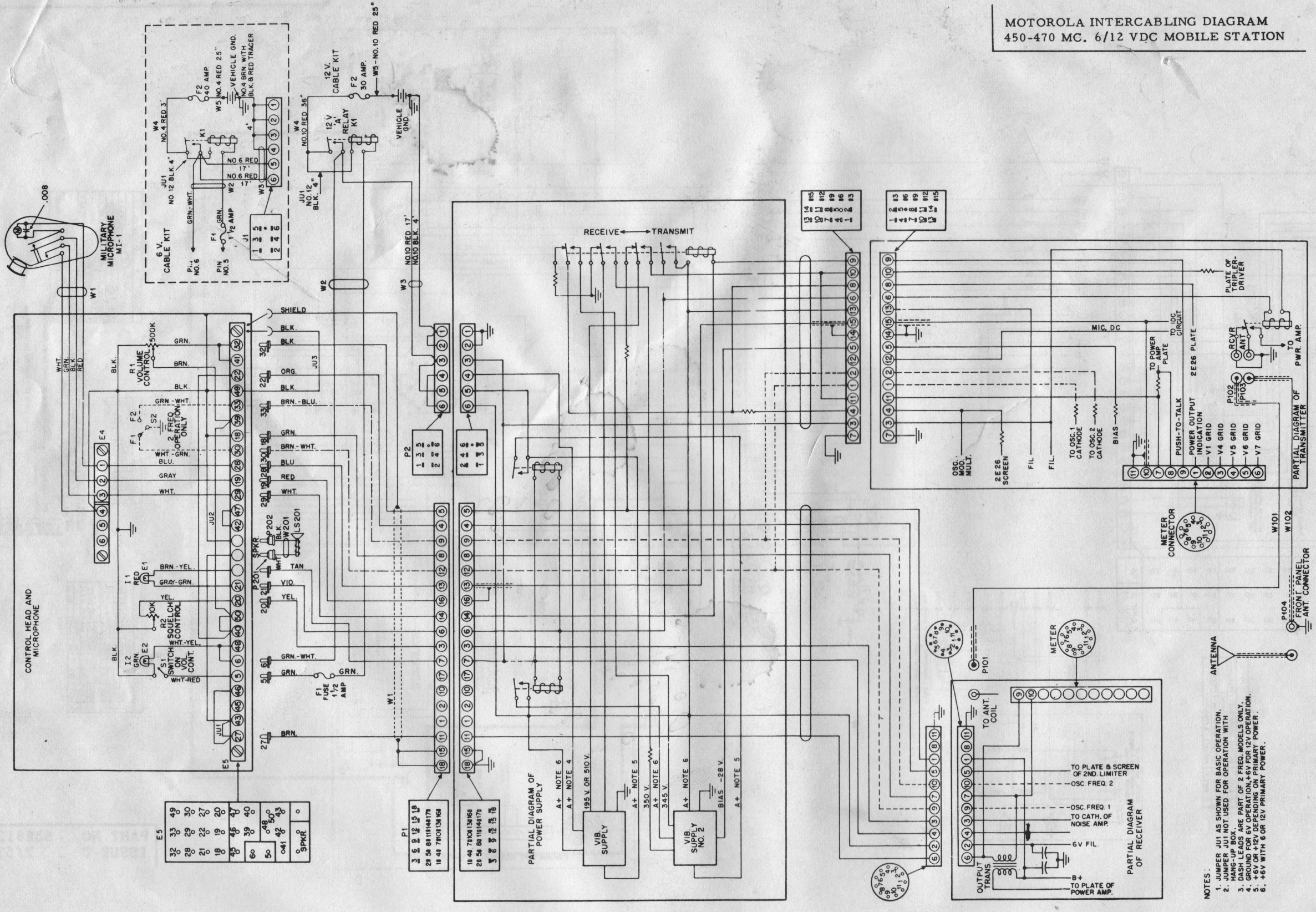

NOTES:
1. JUMPER JU1 AS SHOWN FOR BASIC OPERATION.
2. JUMPER JU1 NOT USED FOR OPERATION WITH HANG-UP BOX.
3. DASH LEADS ARE PART OF 2 FREQ. MODELS ONLY.
4. GROUND CASE FOR 6 VOLT OPERATION.
5. +6V OR +12V DEPENDING ON PRIMARY POWER.
6. +6V WITH 6 OR 12V PRIMARY POWER.

PART NO. 63E830701
ISSUE - A 11/53-UM

REFER TO INDIVIDUAL SCHEMATICS FOR COMPLETE DETAILS OF EACH UNIT

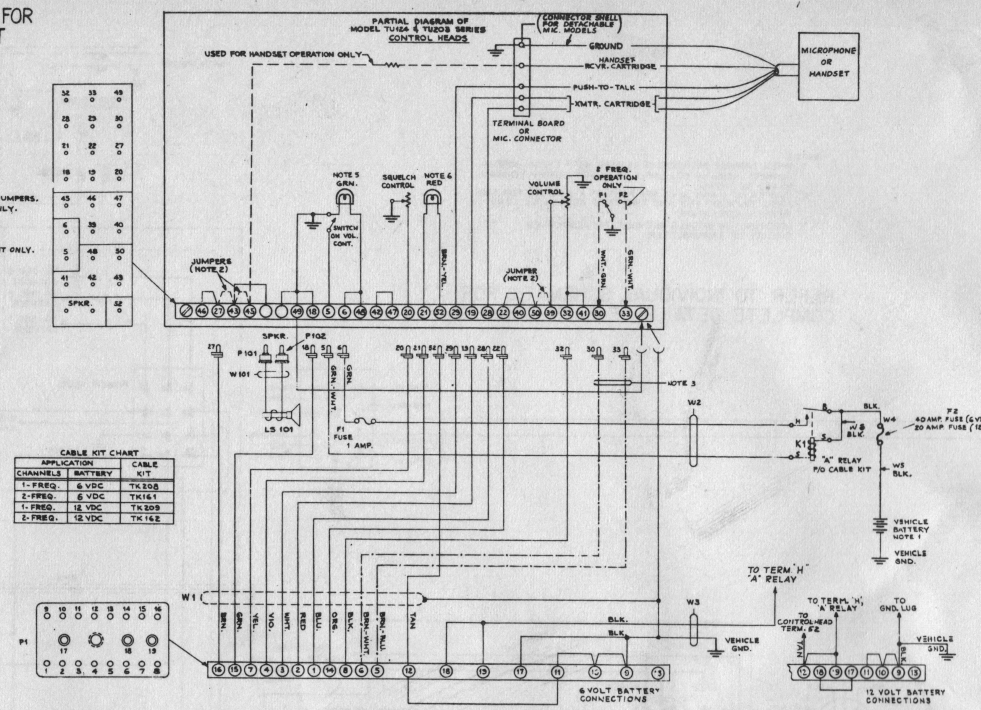

NOTES:
1. BATTERY TO BE EITHER NEGATIVE OR POSITIVE GROUND.
2. REFER TO APPLICABLE CONTROL HEAD SCHEMATIC DIAGRAM FOR USE OF JUMPERS.
3. DOT DASHED CABLE KIT LEADS PART OF 2-FREQUENCY CABLE KITS ONLY.
4. GROUND FOR 6V. OPERATION, +6V. FOR 12V. OPERATION.
5. +6V. OR +12V. DEPENDING ON PRIMARY POWER.
6. +6V. WITH 6 OR 12V. PRIMARY POWER.
7. RED-GRN. LEAD (DOUBLER DRIVER PLATE) USED WITH 146-174 MC. EQUIPMENT ONLY.

CABLE KIT CHART

APPLICATION CHANNELS	BATTERY	CABLE KIT
1-FREQ.	6 VDC	TK208
1-FREQ.	6 VDC	TK161
1-FREQ.	12 VDC	TK209
2-FREQ.	12 VDC	TK162

T41GGV SERIES MOBILE STATIONS
WITH "DC TYPE" VOLUME CONTROL
CONTROL HEADS
INTERCABLING DIAGRAM

REFER TO INDIVIDUAL SCHEMATICS FOR COMPLETE DETAILS OF EACH UNIT

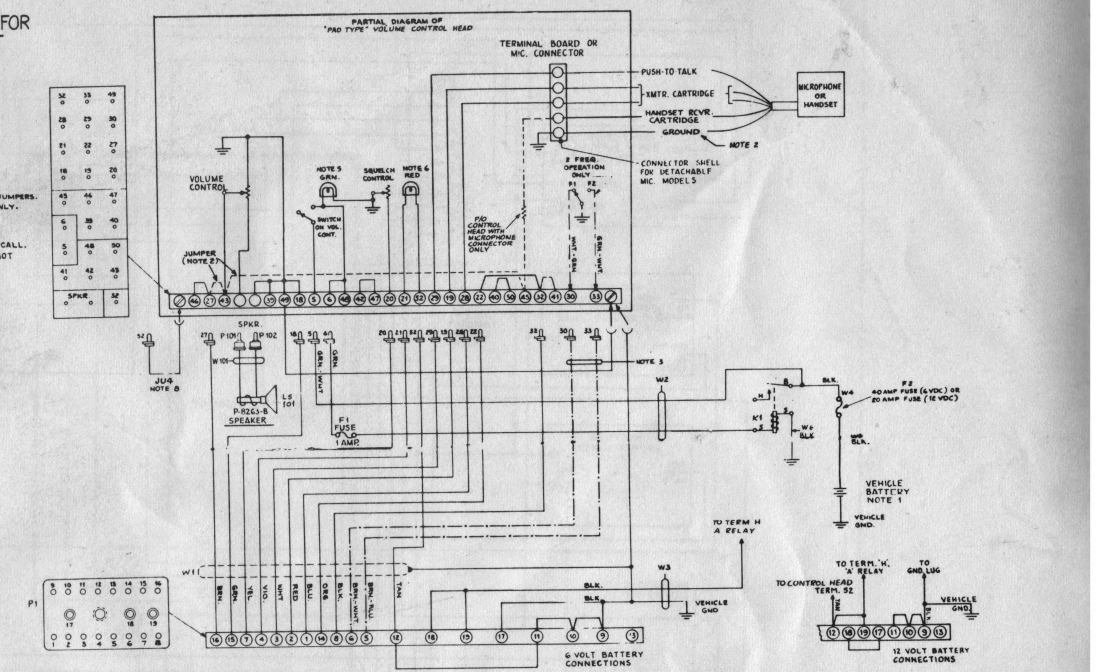

NOTES:
1. BATTERY TO BE EITHER NEGATIVE OR POSITIVE GROUND.
2. REFER TO APPLICABLE CONTROL HEAD SCHEMATIC DIAGRAM FOR USE OF JUMPERS.
3. DOT DASHED CABLE KIT LEADS PART OF 2-FREQUENCY CABLE KITS ONLY.
4. GROUND FOR 6V. OPERATION, +6V. FOR 12V. OPERATION.
5. +6V. OR +12V. DEPENDING ON PRIMARY POWER.
6. +6V. WITH 6 OR 12V. PRIMARY POWER.
7. JUMPER JU3 IS USED WHEN HANG-UP BOX IS USED WITHOUT QUIK-CALL.
8. JUMPER JU4 IS USED WITH K-9024/K-9025 SERIES CABLE KITS. NOT USED WITH "TK" SERIES CABLE KITS.

CABLE KIT CHART

APPLICATION CHANNELS	BATTERY	CABLE KIT
1-FREQ.	6 VDC	TK208
2-FREQ.	6 VDC	TK161
1-FREQ.	12 VDC	TK209
2-FREQ.	12 VDC	TK162

T41GGV SERIES MOBILE STATIONS
WITH "PAD TYPE" VOLUME CONTROL
CONTROL HEADS
INTERCABLING DIAGRAM

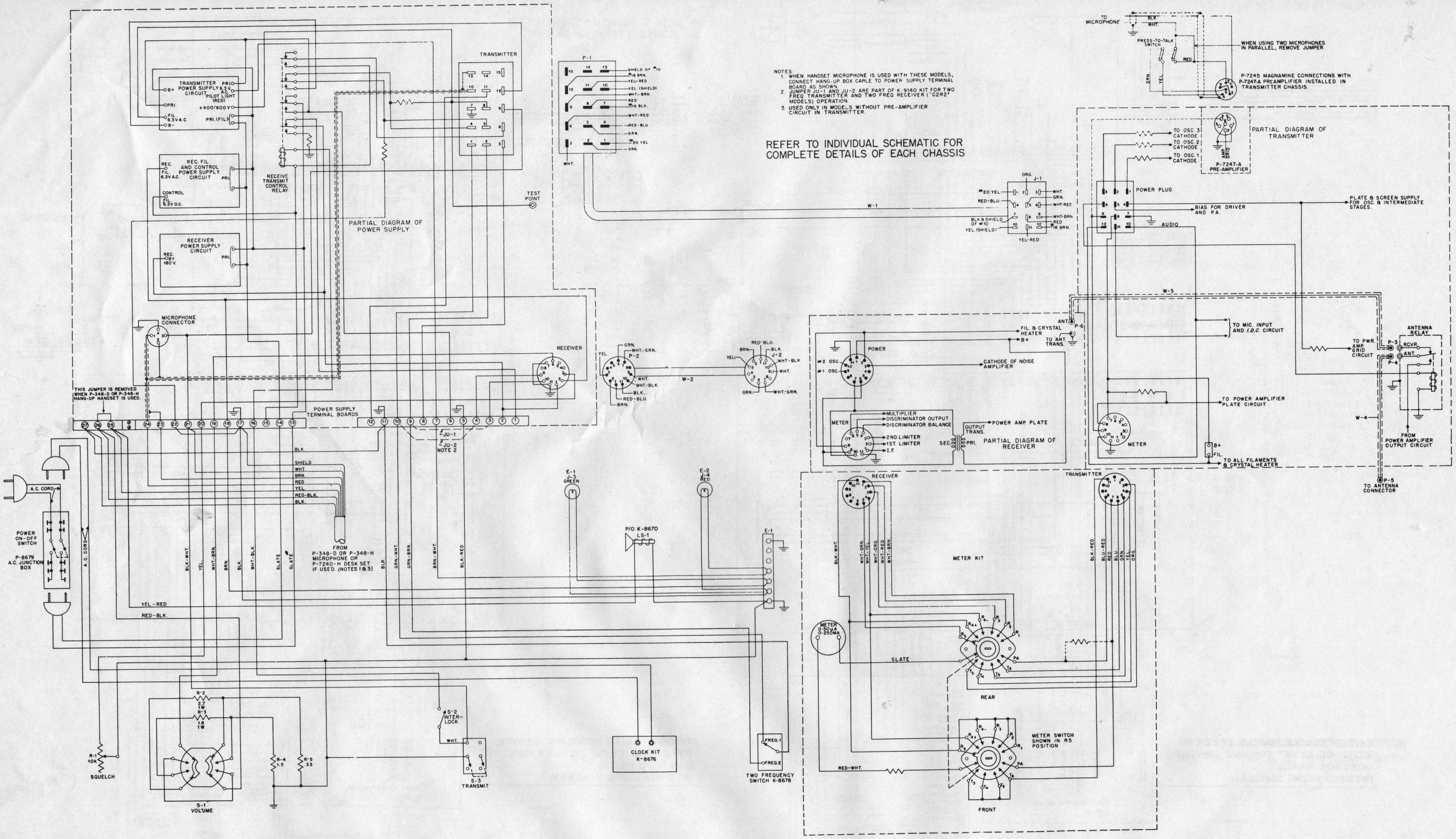

MOTOROLA INTERCABLING DIAGRAM,
SINGLE-RECEIVER 80 & 140 'BY' MODELS

PART NO. 63E891621
ISSUE-E 8/51-UM

REFER TO INDIVIDUAL SCHEMATIC
FOR COMPLETE DETAIL OF EACH
CHASSIS

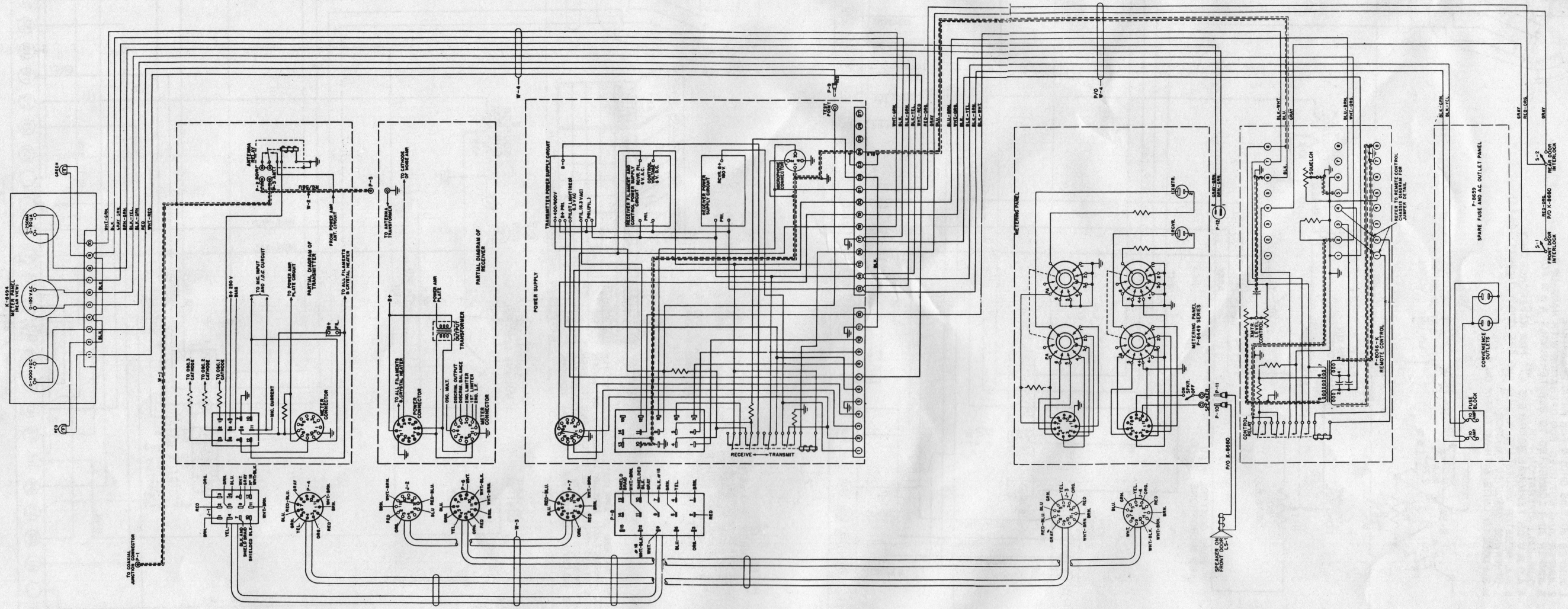

MOTOROLA INTERCABLING DIAGRAM,
SINGLE-RECEIVER 80 & 140 'BR' MODELS

PART NO. 63E891622
ISSUE - D 8/51-UM

MOTOROLA SCHEMATIC DIAGRAM
CONTROL HEAD & MICROPHONE
(TU124 SERIED, TU146 SERIES)

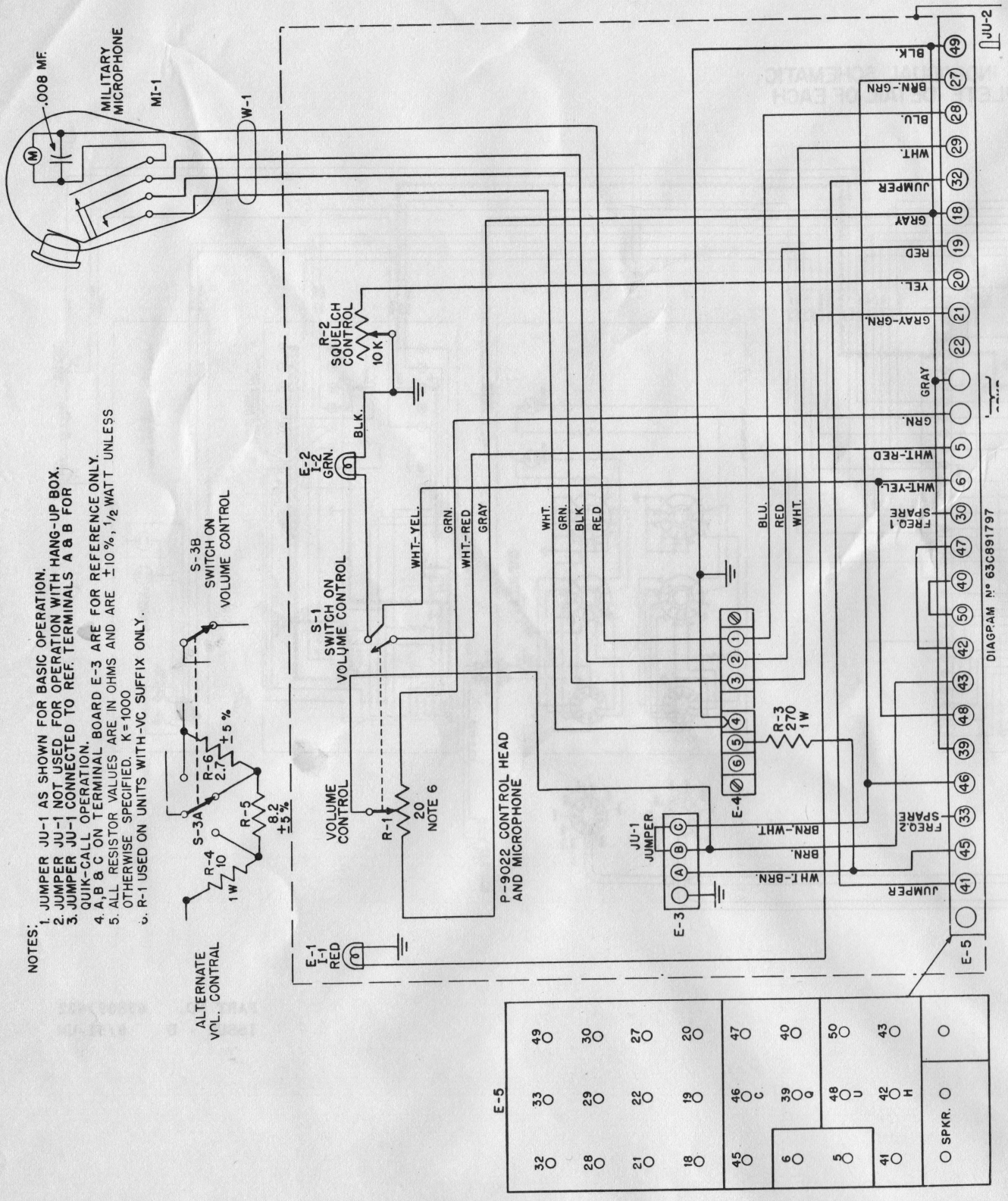

NOTES:
1. JUMPER JU-1 AS SHOWN FOR BASIC OPERATION.
2. JUMPER JU-1 NOT USED FOR OPERATION WITH HANG-UP BOX.
3. JUMPER JU-1 CONNECTED TO REF. TERMINALS A & B FOR QUIK-CALL OPERATION.
4. A, B & C ON TERMINAL BOARD E-3 ARE FOR REFERENCE ONLY.
5. ALL RESISTOR VALUES ARE IN OHMS AND ARE ±10%, ½ WATT UNLESS OTHERWISE SPECIFIED. K=1000
   a. R-1 USED ON UNITS WITH -VC SUFFIX ONLY.

NOTES:
1. JUMPER JU-1 AS SHOWN FOR BASIC OPERATION.
2. JU1 CONNECTED 45 TO 43 & JU2 OMITTED FOR QUIK-CALL OPERATION.
3. S-2 AND ASSOCIATED DOTTED LEADS ARE USED ONLY ON 2 FREQUENCY CONTROL HEADS.
4. ALL RESISTOR VALUES ARE IN OHMS ±10% AND ARE 1/2 WATT UNLESS OTHERWISE SPECIFIED. K=1000

MODEL	DESCRIPTION
TU124	MILITARY MIC., 1 FREQ.
TU124-C2	MILITARY MIC., 2 FREQ.

MODIFYING SERVICE BULLETIN NUMBERS 450 481

MODEL	DISCONTINUED VERSIONS	LATEST VERSION
TU 124-C2	-1	-2
TU 124	*	-1

* EFFECTIVE BEGINNING OF PRODUCTION

THIS DIAGRAM IS APPLICABLE *AS DRAWN* TO THE LATEST PRODUCTION VERSION INDICATED BY SUFFIX NUMBERS IN THE TABLE. IT IS APPLICABLE TO EACH EARLIER PRODUCTION VERSION WHEN AMENDED BY ALL SERVICE BULLETINS LISTED FOR SUCCEEDING VERSIONS.

MOTOROLA SCHEMATIC DIAGRAM
P-9022 CONTROL HEAD AND MICROPHONE

K-8203-E CONTROL PANEL SCHEMATIC DIAGRAM

PANEL OF 8270 REMOTE

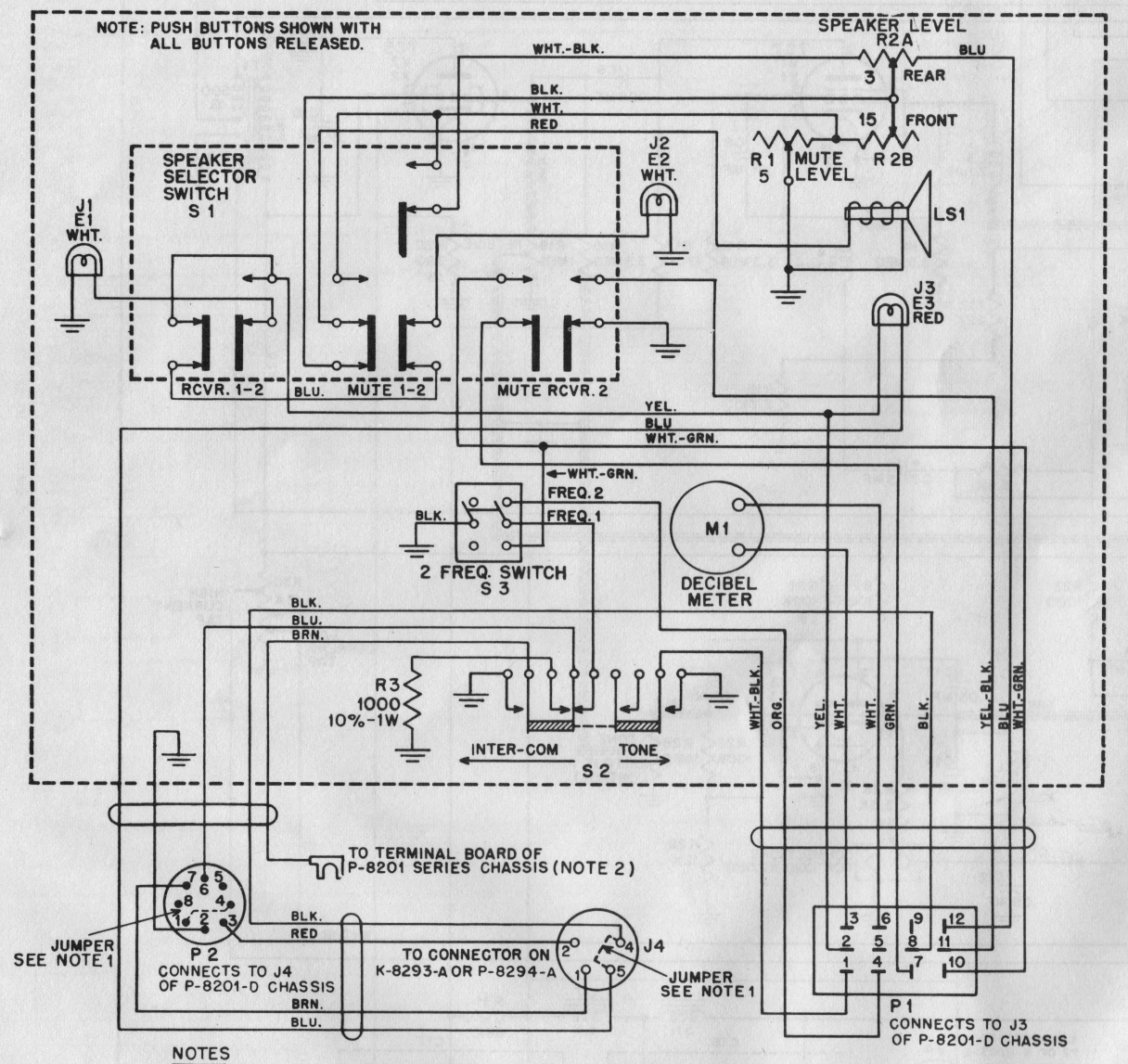

NOTES

1. IF THIS PANEL IS EVER TO BE USED ON OLD P-8270 MODEL, A JUMPER WILL BE REQUIRED ACROSS PINS 4 & 5 OF J4 AND PINS 1 & 4 OF P2.
2. BRN. LEAD CONNECTS TO TERMINAL 6 WHEN USING MAGNETIC MIC (P-7245, TU140, TU151), OR TO TERMINAL 7 WHEN USING CARBON TYPE HANDSET OR DESKSET (P-348-C, TU126).

DIAGRAM NO. 63C823805

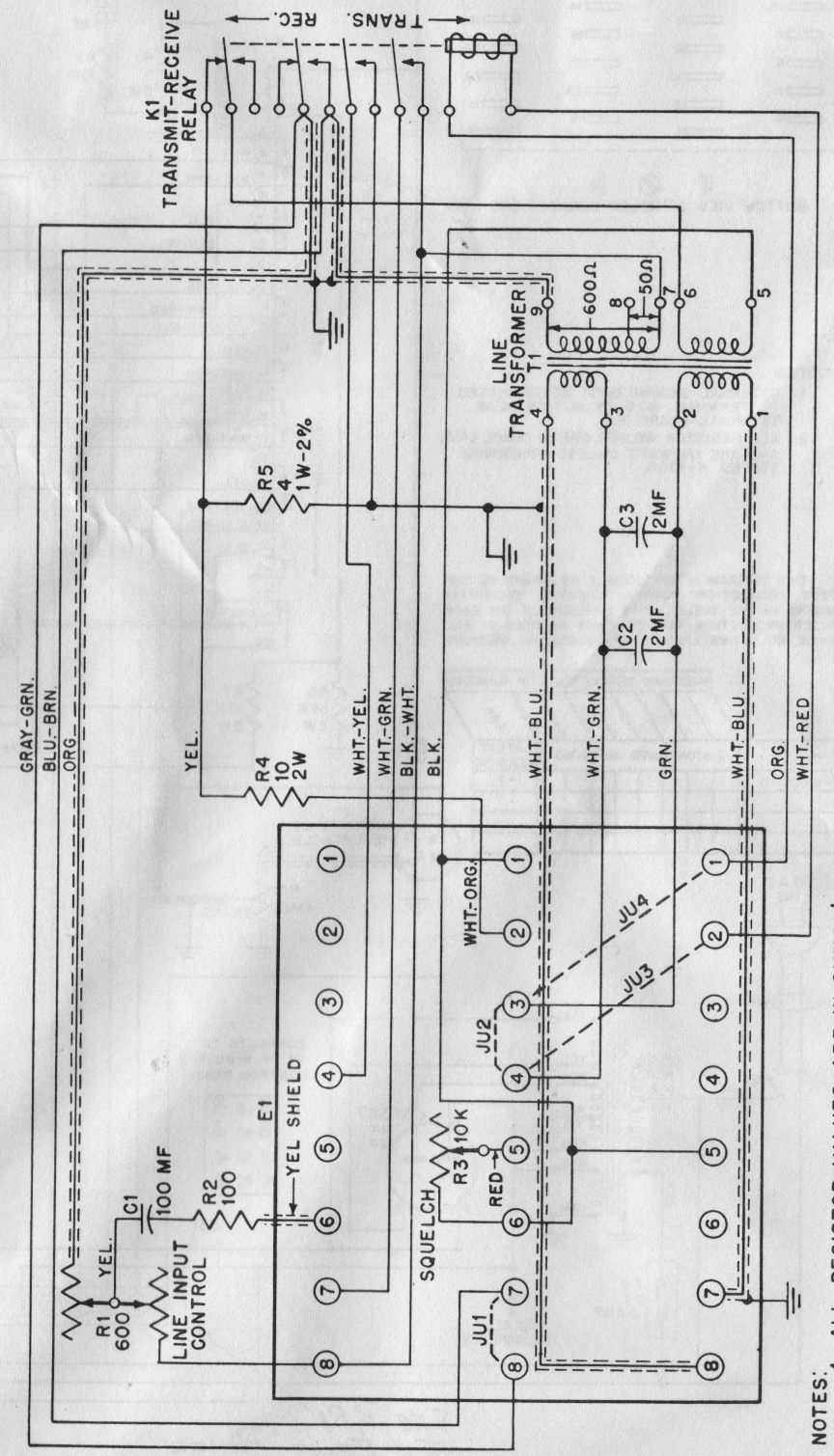

JUMPER TABLE

APPLICATION	JU-1	JU-2	JU-3	JU-4
2 WIRE REMOTE CONTROL	OMIT	OMIT	USED	USED
REPEATER (RT)	USED	OMIT	USED	USED
BASE STATION (RA)	OMIT	USED	OMIT	OMIT
4 WIRE REMOTE CONTROL	OMIT	USED	OMIT	OMIT
REPEATER (RA)	OMIT	USED	OMIT	OMIT

NOTES:
1. ALL RESISTOR VALUES ARE IN OHMS ±10 % AND ARE ½ WATT UNLESS OTHERWISE SPECIFIED.
2. K-1 IS SHOWN IN RECEIVE POSITION.

P-8201-D PRE-AMPLIFIER-LINE AMPLIFIER CHASSIS SCHEMATIC DIAGRAM

8270 Remote

NUMBERS ON CONTACTS CORRESPOND TO NUMBERS ON SCHEMATIC DIAGRAM

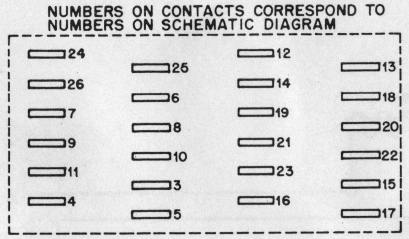

BOTTOM VIEW OF RELAY CONNECTIONS

NOTES:

1. EXTERNAL GROUND MUST BE CONNECTED TO TERMINAL NO.5 OR NO.7 ON REAR TERMINAL BOARD (E1).
2. ALL RESISTOR VALUES ARE IN OHMS, ±10% AND ARE 1/2 WATT UNLESS OTHERWISE STATED. K=1000.

THIS DIAGRAM IS APPLICABLE *AS DRAWN* TO THE LATEST PRODUCTION VERSION INDICATED BY SUFFIX NUMBERS IN THE TABLE. IT IS APPLICABLE TO EACH EARLIER PRODUCTION VERSION WHEN AMENDED BY *ALL* SERVICE BULLETINS LISTED FOR SUCCEEDING VERSIONS.

MODEL	DISCONTINUED VERSIONS	LATEST VERSION
	MODIFYING SERVICE BULLETIN NUMBERS 486	
P-8201-D		-1

SEE P8-6Y FOR FRONT PANEL

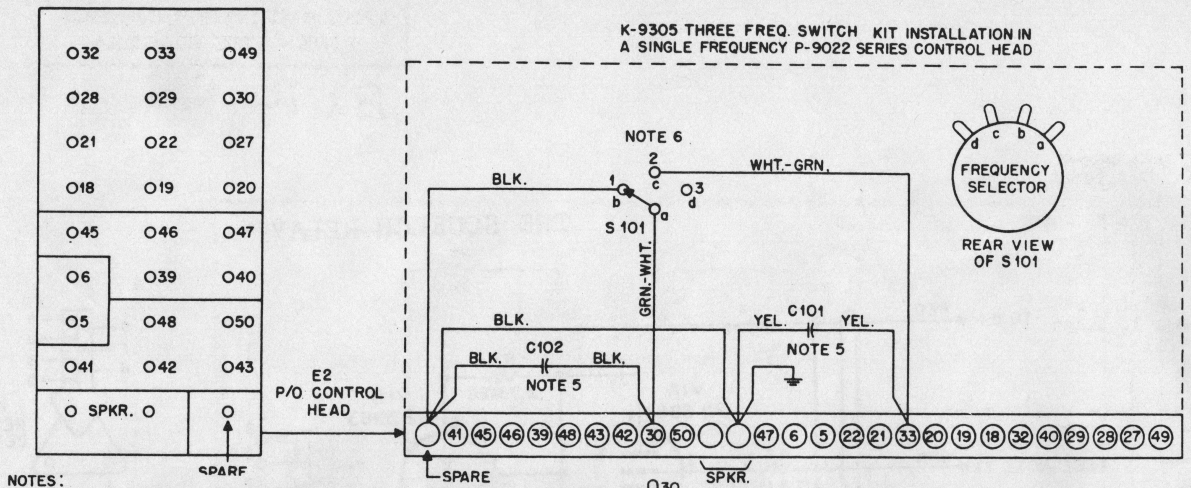

K-9305 THREE FREQ. SWITCH KIT INSTALLATION IN A SINGLE FREQUENCY P-9022 SERIES CONTROL HEAD

NOTES:

1. THE OSCILLATOR IS SHIPPED WITH JUMPER JU1 DISCONNECTED. REFER TO APPLICABLE INSTALLATION INSTRUCTIONS FOR PROPER CONNECTION.
2. THE BLU. LEAD IS GROUNDED WHEN K-9305 SWITCH KIT IS OMITTED; CONNECTS TO SPARE LEAD OF EXISTING CONTROL CABLE WHEN INSTALLED IN TRUNK MOUNTED MODELS; CONNECTS TO SELECTOR ARM OF K-9305 SWITCH WHEN INSTALLED IN FRONT MOUNTED MODELS. SEE TEXT FOR SPECIFIC CONNECTION DETAILS.
3. GRN. LEAD, RESISTORS R101 & R102 & .01MF CAPACITOR CONNECTED AS SHOWN FOR AUDIO AMPLIFIERS WITH BY-PASSED CATHODE CIRCUIT. FOR AMPLIFIERS WITH UN-BY-PASSED CATHODE(10 WATT UNI-CHANNEL AND "PA" SERIES TRANSMITTERS) OMIT R101, R102 & .01MF CAPACITOR AND CONNECT GRN. LEAD DIRECTLY TO CATHODE OF AMPLIFIER. DASHED CIRCUITRY REPRESENTS EXISTING AMPLIFIER WIRING. R101, R102 & .01MF CAPACITOR NOT SUPPLIED.
4. THE OSCILLATOR OPERATES AT A FREQUENCY DETERMINED BY CAPACITOR C4. THE VALUE OF C4 IS FACTORY SELECTED TO OBTAIN AN OUTPUT FREQUENCY OF 1800, 1950, 2100, 2250 OR 2400 CPS WITH BLU. LEAD GROUNDED.
5. C4, C101 & C102 MAY CONSIST OF A COMBINATION OF VALUES CONNECTED IN PARALLEL.
6. C103 USED ONLY IN FRONT MOUNT AND A.C. UTILITY INSTALLATIONS.
7. REFER TO TEXT FOR FREQUENCIES AVAILABLE.
8. CAPACITOR VALUES ARE IN MICROFARADS UNLESS OTHERWISE INDICATED.

P-9301 SINGLE TONE OSCILLATOR

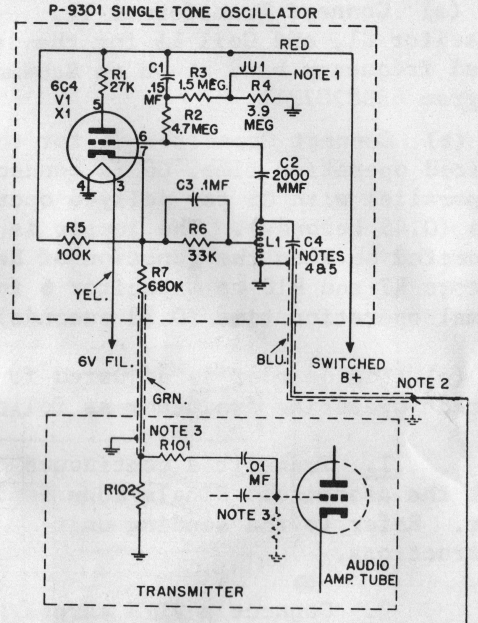

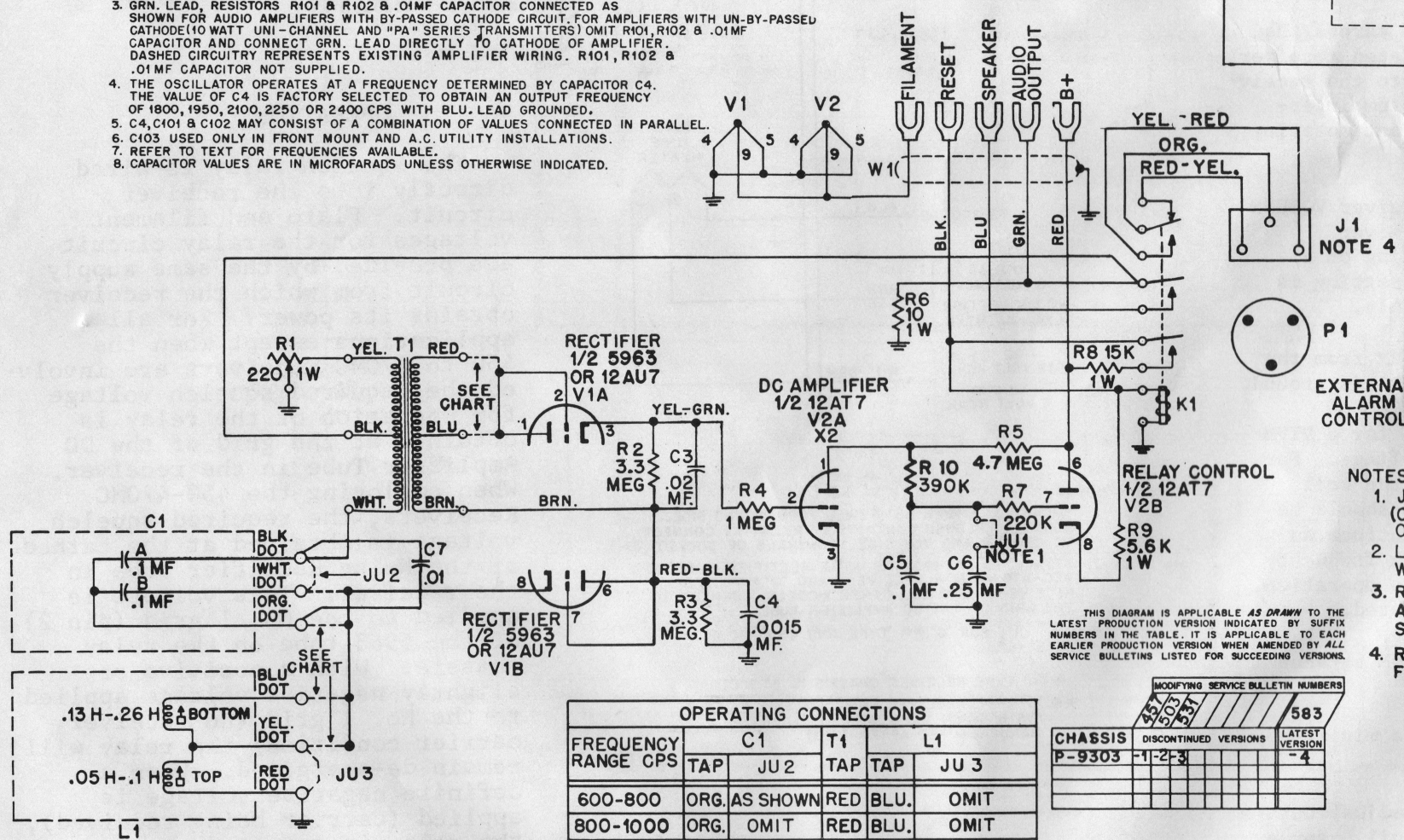

OPERATING CONNECTIONS					
FREQUENCY RANGE CPS	C1		T1	L1	
	TAP	JU2	TAP	TAP	JU3
600-800	ORG.	AS SHOWN	RED	BLU.	OMIT
800-1000	ORG.	OMIT	RED	BLU.	OMIT
1000-1300	ORG.	OMIT	RED	BLU.	AS SHOWN
1300-1500	ORG.	AS SHOWN	BLU.	YEL.	OMIT
1500-2150	ORG.	OMIT	BLU.	YEL.	OMIT
2150-3000	WHT.	OMIT	RED	YEL.	OMIT

THIS DIAGRAM IS APPLICABLE *AS DRAWN* TO THE LATEST PRODUCTION VERSION INDICATED BY SUFFIX NUMBERS IN THE TABLE. IT IS APPLICABLE TO EACH EARLIER PRODUCTION VERSION WHEN AMENDED BY *ALL* SERVICE BULLETINS LISTED FOR SUCCEEDING VERSIONS.

MODIFYING SERVICE BULLETIN NUMBERS					
CHASSIS	DISCONTINUED VERSIONS				LATEST VERSION
P-9303	-1	-2	-3	583	-4

NOTES:

1. JU1 IS USED FOR DELAYED OPERATION TIME (0.45 SEC.) AND IS OMITTED FOR NORMAL OPERATION TIME (0.15 SEC.)
2. LUGS ARE NOT ATTACHED TO CABLE W1 WHEN SHIPPED.
3. RESISTOR VALUES ARE IN OHMS ±10%, AND ARE 1/2 WATT UNLESS OTHERWISE STATED.
4. RECEPTACLE J1 SHOWN AS VIEWED FROM WIRING SIDE.

P-9303 Single Tone Receiver
Schematic Diagram
Motorola No. 63B820721-G
6/12/59-UM

OPERATION AND ADJUSTMENT OF SINGLE TONE OSCILLATORS AND DECODERS

Theory of Operation

The P-9303 Single-Tone Decoder is designed to operate in conjunction with any standard MOTOROLA receiver. The 3.2 ohm output of the standard receiver is fed to the input of the decoder. When the single frequency signal to which the decoder is tuned is received, the relay on the decoder operates and provides a circuit closure function. This circuit may be connected to a visual or audible alarm. Refer to Schematic Diagram 63B-820721 for circuit details of the decoder.

The primary winding of Input Transformer T 1 on the decoder has an electrical center tap. The standard receiver output is connected to this point through a jumper connected across normally closed contacts of Alarm Relay K1. One end of the input transformer is connected to ground through variable Resistor R1. The other end of the transformer is connected to ground through capacitance-inductance circuit L1 and C1 which is capable of being series resonated at any frequency between 600 and 3200 CPS with the exception of those frequencies between 800 and 850 CPS.

(1) Operation with "On-Frequency" Signal

When a signal to which the decoder is aligned is fed to Transformer

T1, the current through both halves of the primary winding are equal and opposite in phase. Therefore, no voltage is induced into the secondary winding. However, the current flow through the series resonant circuit of L1 and C1 caused a voltage to appear across L1. This voltage is rectified by V1-B, filtered by R3 and C4, and the negative resultant voltage is applied to the grid (pin 2) of V2-A. The negative voltage drives Tube V2-S into cut-off.

When Tube V2-S is cut off, Capacitor C5 or Capacitors C5 and C6 (Refer to Note 1 of Schematic Diagram 63B820721) start to change towards the B+ potential. As the voltage applied to the grid (pin 7) of V2-B increases, sufficient current flows in the cathode circuit to cause Relay K1 to energize. As the voltage applied to the grid of V2-B increases, current flows in the grid circuit. This current flow causes a voltage drop across Resistors R5, R7 and R10 which limits the grid current to a safe value.

When Relay K1 is energized, the circuit connected to ALARM CONTROL Jack J1 is closed, thereby completing the external alarm circuit. The other pair of form "A" contacts connecte B+ to the relay coil through Resistor R8. This locks in the relay and holds the alarm circuit contacts closed until the receiver is reset. The form "C" contacts complete the circuit from the standard receiver output to the speaker. The normally closed pair of these contacts is jumpered to prevent the receiver output from being disconnected from the decoder.

When connected as previously outlined, either one of two methods for resetting the decoder may be used.

(a) Turn the power to the standard equipment "off".

(b) Install an external push-button which may be used to momentarily ground the BLK lead of the input cable.

The decoder is designed so that the voltage applied to V1 A with signals for off-frequency is approximately equal the voltage developed across L1 with signals on frequency.

Alignment

(a) Connect Transformer T1, Capacitor C1, and Coil L1 for the desired frequency band shown on Schematic Diagram 63B820721.

(b) Connect Capacitor C6 for the desired operation time. C6 is connected in parallel with C5 for delayed operation time (0.45 seconds). The jumper is not connected between the junction of Resistors R7 and R10 to Capacitor 6 for normal operation time (0.13 seconds).

(c) The decoder is adjusted for the correct operating frequency as follows:

1. Transmit a continuous tone from the associated Single-Tone sending unit. Refer to the sending unit instructions.

2. Connect a VTVM across the 3 ohm winding of the associated receiver output transformer. Refer to the receiver schematic diagram or system intercabling diagram for convenient metering terminals.

3. Adjust the receiver VOLUME control (located on the receiver chassis) for a 0.4 VAC reading on a VTVM. This volume control setting is for test and/or alignment only.

4. Connect the VTVM from the junction of L1 and C1 to chassis ground.

5. Adjust Coil L1 for a VTVM indication of maximum AC voltage. For 600 to 1700 cps operation, the coil slug underneath the chassis should be adjusted. The top slug functions as a vernier adjustment in this frequency range. For 1700 to 3200 cps operation, the top slug should be adjusted.

6. Connect the VTVM between pin 1 of V1A and ground.

7. Adjust R1 for a minimum voltage reading on the VTVM.

8. Make a slight adjustment of the applicable slug in Coil L for a minimum reading on the VTVM. This adjustment is necessary to compensate for any phase difference between currents in the two halves of the primary winding of Transformer T 1.

THE SQUELCH RELAY

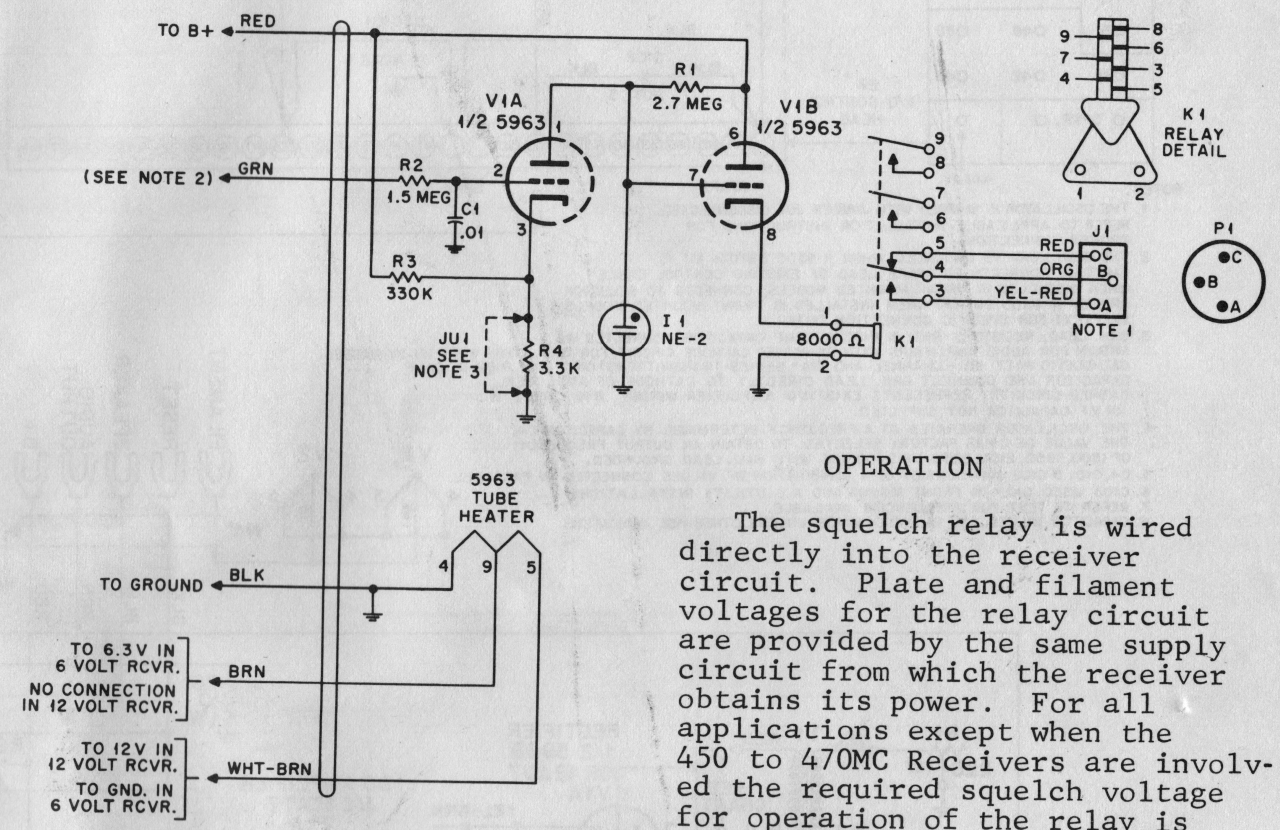

NOTES:

1. SOCKET J1 SHOWN AS VIEWED FROM WIRING SIDE. NORMALLY CLOSED CONTACTS OF RELAY K1 CONNECT TO CENTER AND TOP SIDE TERMINALS OF SOCKET.
2. ATTACH TO CATHODE OF NOISE RECTIFIER TUBE ON 450-470 MC "A"* RECEIVERS AND "G"** TYPE RECEIVERS. FOR ALL OTHER MODELS, CONNECT TO THE GRID OF THE DC AMPLIFIER TUBE.
3. OMIT JU1 FOR "G"** TYPE AND 450-470 MC RECEIVERS.

* "A" TYPE RECEIVER CHASSIS IS 5" WIDE.

** "G" TYPE RECEIVER BASIC CHASSIS WIDTH 3" (OR 5" WHEN USED WITH "L" ADAPTER MANUFACTURED AFTER 1955).

Model TK297 Squelch Relay Kit
Schematic Diagram
Motorola Part No. 63B839024-C1
1/12/62-UM

OPERATION

The squelch relay is wired directly into the receiver circuit. Plate and filament voltages for the relay circuit are provided by the same supply circuit from which the receiver obtains its power. For all applications except when the 450 to 470MC Receivers are involved the required squelch voltage for operation of the relay is obtained at the grid of the DC Amplifier Tube in the receiver. When employing the 450-470MC Receivers, the required squelch voltage is obtained at the cathode of the Noise Rectifier Tube in the receiver. This voltage is applied to the No. 1 grid (pin 2) of the 5963 tube on the relay chassis. With a positive or slightly negative voltage applied to the No. 1 grid (no receiver carrier condition) the relay will remain de-energized. When a definite negative voltage is applied (carrier being received), the relay is actuated.

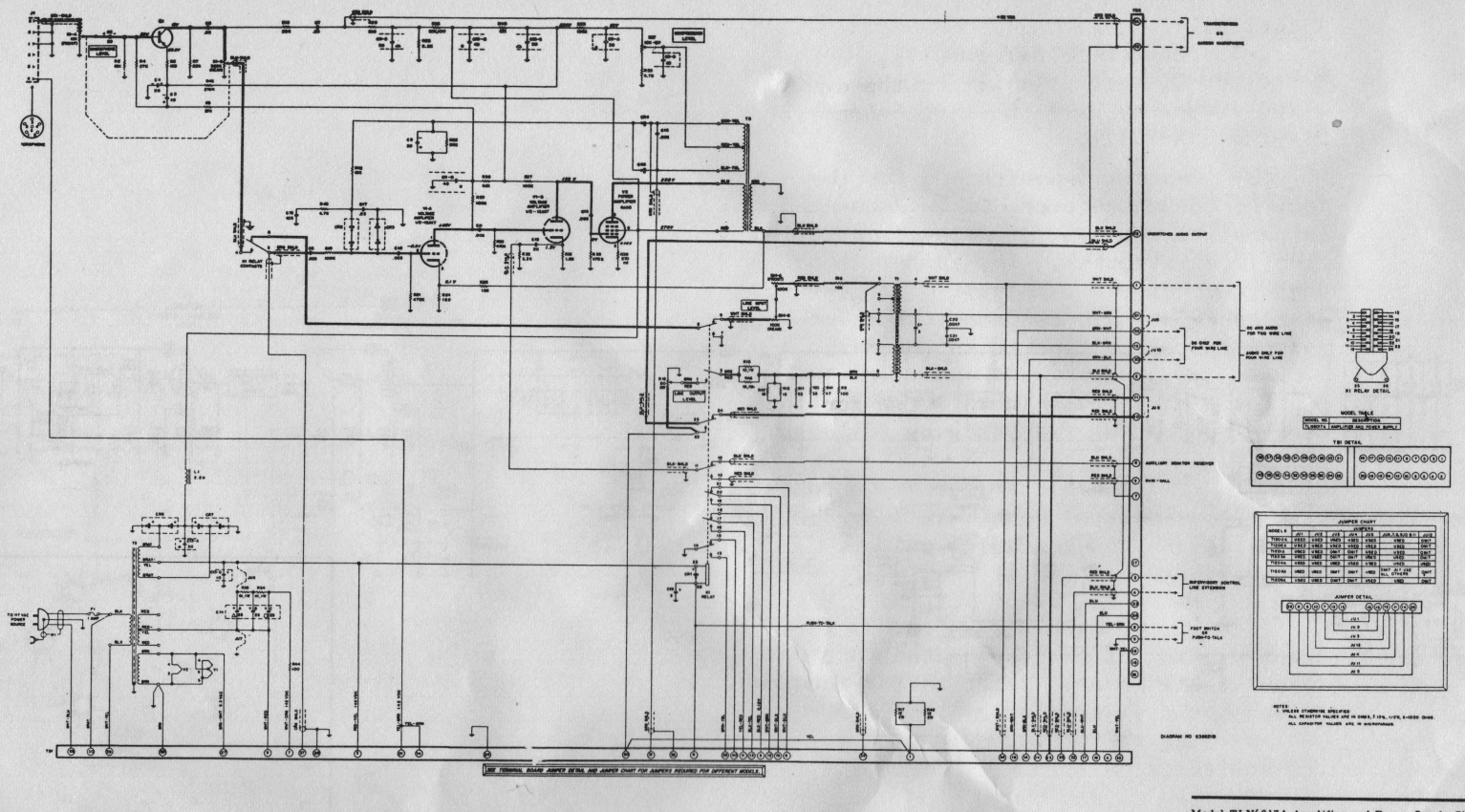

Model TLN6017A Amplifier and Power Supply Chassis
Schematic Diagram
Motorola No. 63E862181-A
6/16/59-RS

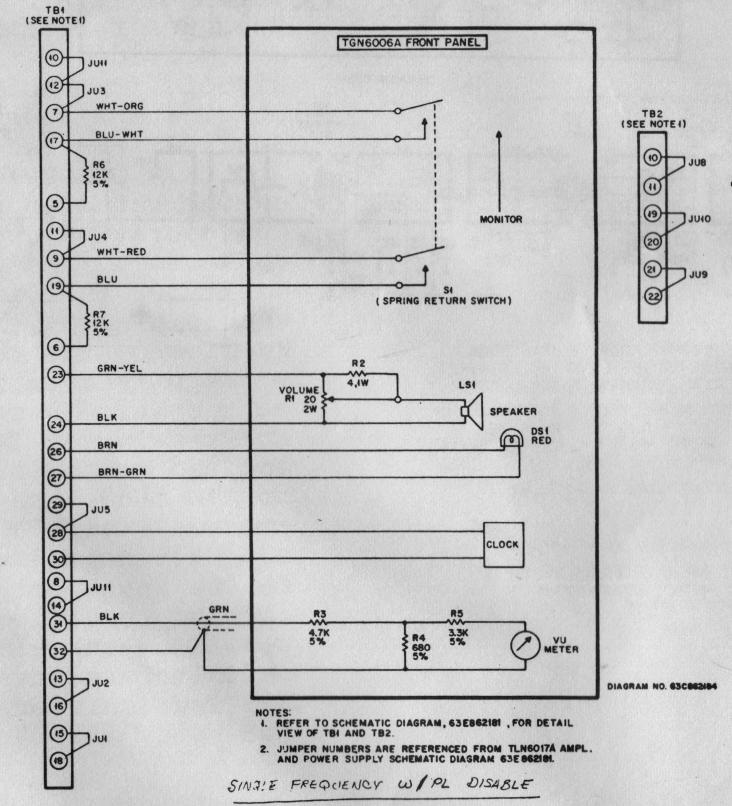

NOTES:
1. REFER TO SCHEMATIC DIAGRAM, 63E862181, FOR DETAIL VIEW OF TB1 AND TB2.
2. JUMPER NUMBERS ARE REFERENCED FROM TLN6017A AMPL. AND POWER SUPPLY SCHEMATIC DIAGRAM 63E862181.

SINGLE FREQUENCY W/PL DISABLE

Model T1204A
Remote Control Console
Intercabling Diagram
Motorola No. 63C862184-O
2/18/59-RS

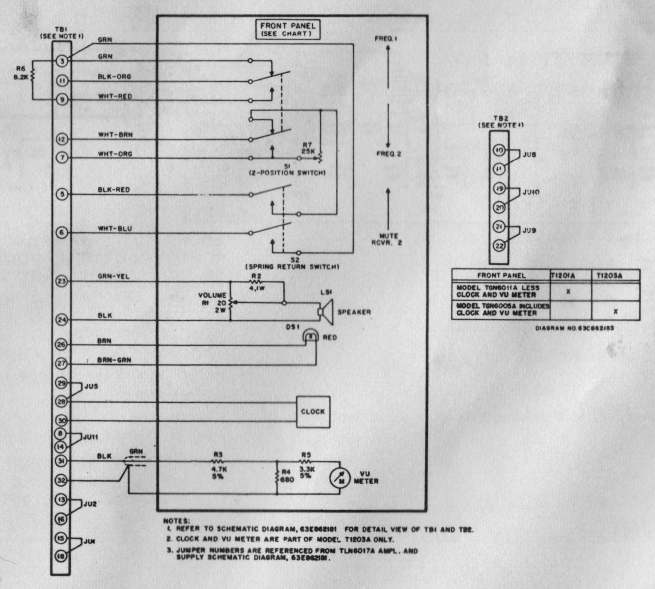

NOTES:
1. REFER TO SCHEMATIC DIAGRAM, 63E862181 FOR DETAIL VIEW OF TB1 AND TB2.
2. CLOCK AND VU METER ARE PART OF MODEL T1203A ONLY.
3. JUMPER NUMBERS ARE REFERENCED FROM TLN6017A AMPL. AND SUPPLY SCHEMATIC DIAGRAM, 63E862181.

TWO FREQUENCY

FRONT PANEL	T1203A
MODEL T0N6017A LESS CLOCK AND VU METER	X
MODEL T0N6006A INCLUDES CLOCK AND VU METER	X

DIAGRAM NO. 63C862183

Models T1201A and T1203A
Remote Control Consoles
Intercabling Diagram
Motorola No. 63C862183-O
2/18/59-RS

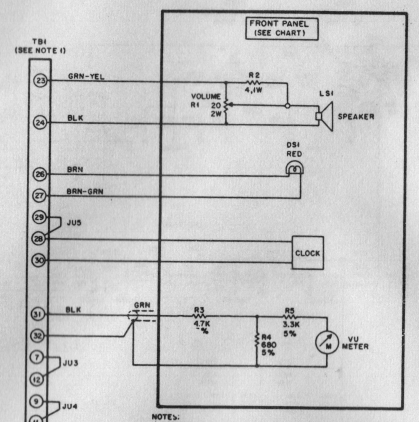

NOTES:
1. REFER TO SCHEMATIC DIAGRAM, 63E862181, FOR DETAIL VIEW OF TB1 AND TB2.
2. CLOCK AND VU METER ARE PART OF MODEL T1202A ONLY.
3. JUMPER NUMBERS ARE REFERENCED FROM TLN6017A AMPLIFIER AND POWER SUPPLY CHASSIS SCHEMATIC DIAGRAM 63E862181.

SINGLE FREQUENCY

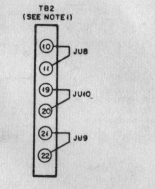

FRONT PANEL	T1202A	T1202A
MODEL T0N6006A LESS CLOCK AND VU METER	X	
MODEL T0N6006A INCLUDES CLOCK AND VU METER		X

DIAGRAM NO. 63C862182

Models T1200A and T1202A
Remote Control Consoles
Intercabling Diagram
Motorola No. 63C862182-O
2/18/59-RS

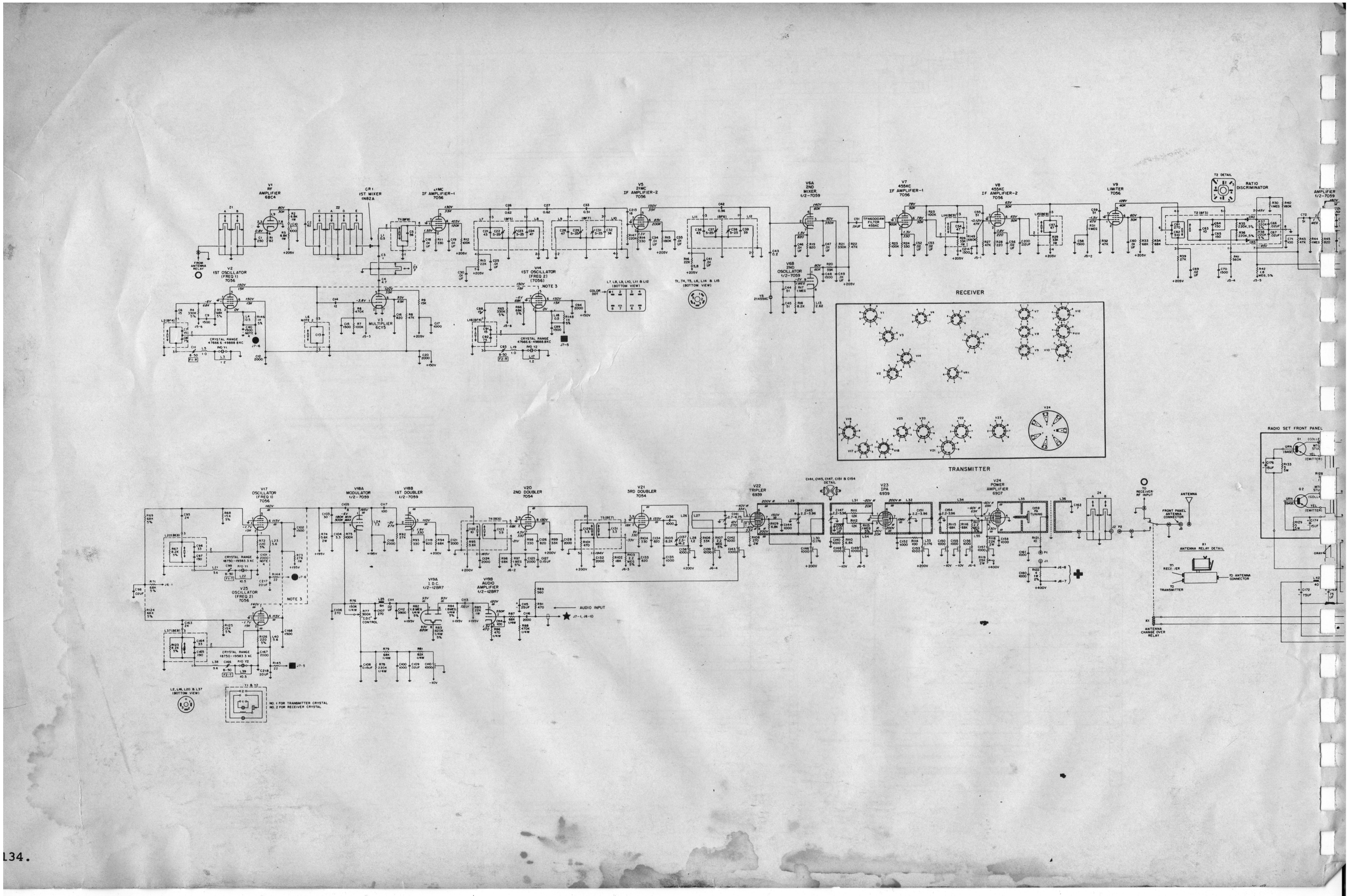
RECEIVER
TRANSMITTER
RADIO SET FRONT PANEL
V1 RF AMPLIFIER 6BC4
CR1 1ST MIXER 1N82A
V2 1ST OSCILLATOR (FREQ 1) 7056
V3 MULTIPLIER 6CY5
V4 1ST OSCILLATOR (FREQ 2) (7056)
V5 21MC IF AMPLIFIER-2 7056
V6A 2ND MIXER 1/2-7059
V6B 2ND OSCILLATOR 1/2-7059
V7 455KC IF AMPLIFIER-1 7056
V8 455KC IF AMPLIFIER-2 7056
V9 LIMITER 7056
RATIO DISCRIMINATOR
V17 OSCILLATOR (FREQ 1) 7056
V18A MODULATOR 1/2-7059
V18B 1ST DOUBLER 1/2-7059
V20 2ND DOUBLER 7054
V21 3RD DOUBLER 7054
V22 TRIPLER 6939
V23 IPA 6939
V24 POWER AMPLIFIER 6907
V25 OSCILLATOR (FREQ 2) 7056
V19A I.D.C. 1/2-12BR7
V19B AUDIO AMPLIFIER 1/2-12BR7
AUDIO INPUT
ANTENNA
FRONT PANEL ANTENNA CONNECTOR
ANTENNA RELAY DETAIL
ANTENNA CHANGE OVER RELAY
NO. 1 FOR TRANSMITTER CRYSTAL
NO. 2 FOR RECEIVER CRYSTAL

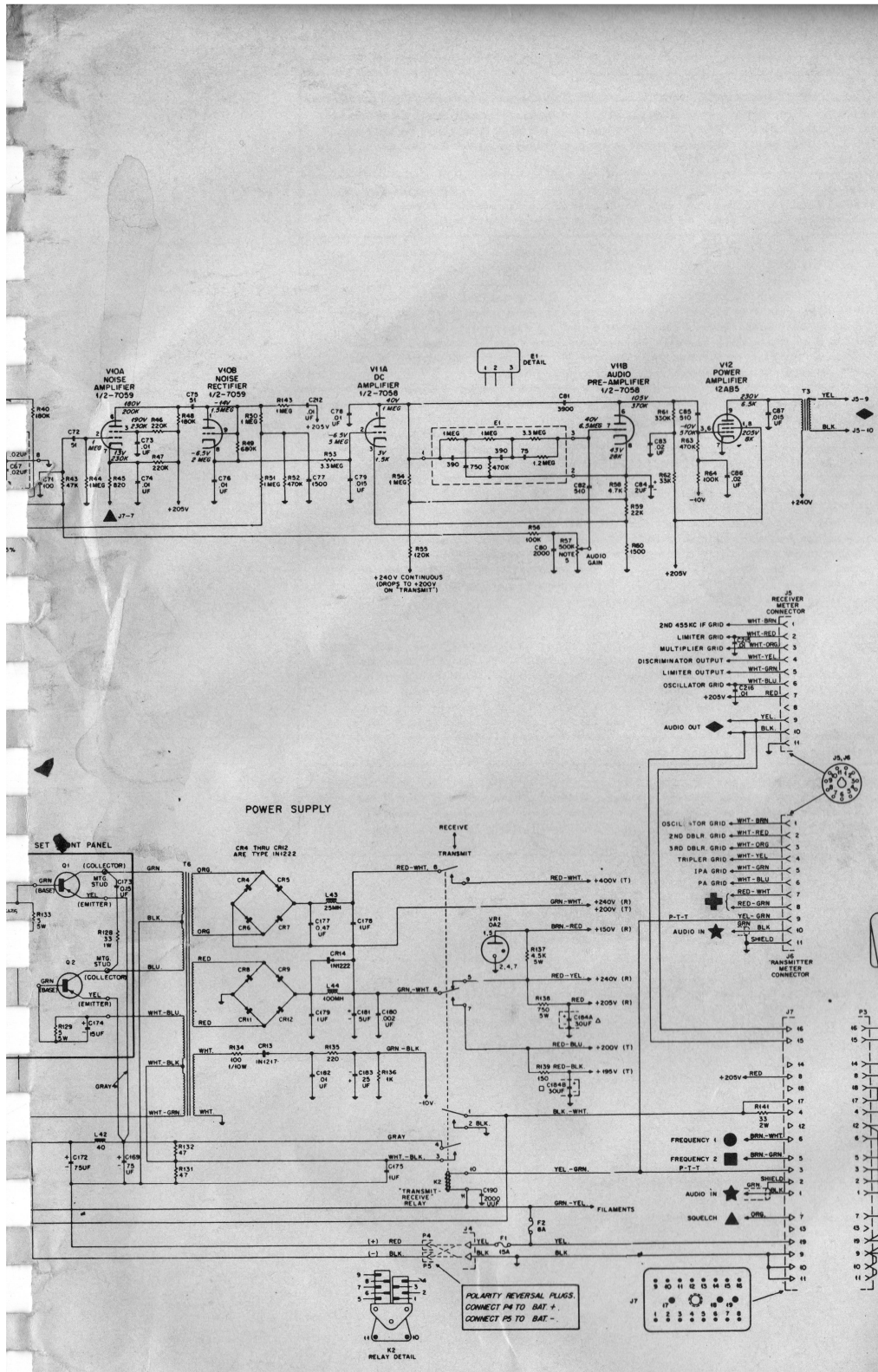

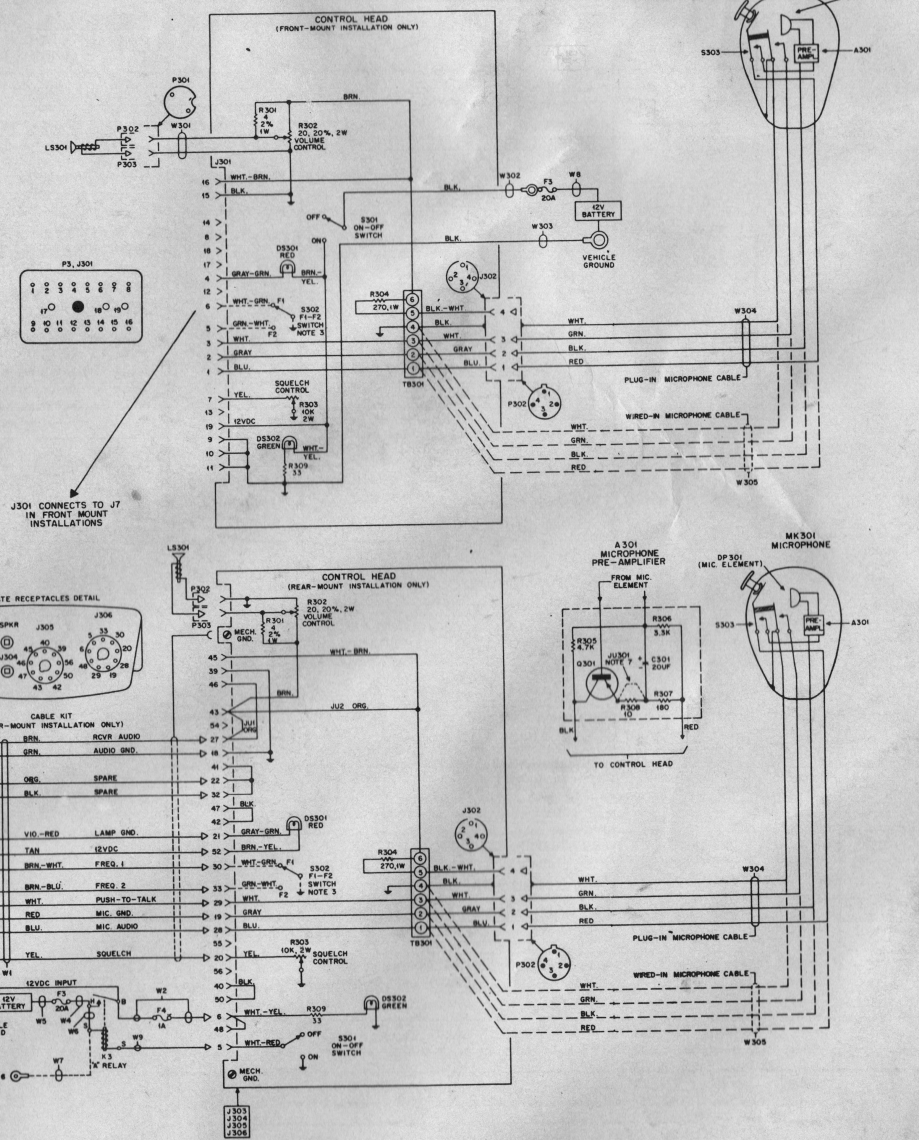

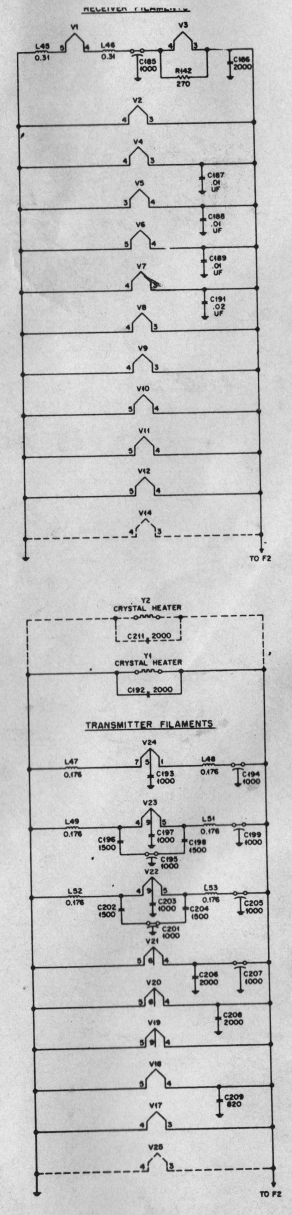

VOLTAGE NOTES

1. ALL READINGS TAKEN WITH RESPECT TO CHASSIS GROUND. MEASUREMENTS ARE MADE WITH A VTVM. VALUES GIVEN ARE THE AVERAGE FOR MANY SETS TESTED. INDIVIDUAL SETS MAY VARY ±10%.
2. MEASURED VOLTAGES DEPEND UPON PRIMARY SUPPLY VOLTAGE. AVERAGE INSTALLATION CONDITIONS ARE:
   A. "STANDBY" (RECEIVER ON, TRANSMITTER OFF): +13.2 VOLTS DC MEASURED ACROSS POLARITY REVERSING PLUGS.
   B. "TRANSMIT" (TRANSMITTER ON THE AIR.): +7.5 VOLTS DC MEASURED ACROSS POLARITY REVERSING PLUGS.
3. READINGS TAKEN WITH MICROPHONE IN CIRCUIT.
4. READINGS DENOTED WITH AN ASTERISK (*) ARE TAKEN WITH A 1 MEGOHM RESISTOR IN SERIES WITH THE PROBE.

RESISTANCE NOTES

1. ALL READINGS TAKEN WITH RESPECT TO GROUND. MEASUREMENTS TO BE MADE WITH A VTVM, CABLE KIT DISCONNECTED.
2. READINGS DENOTED WITH A DAGGER (†) ARE Ω ON SINGLE FREQUENCY MODELS AND M* ON TWO FREQUENCY MODELS.

GENERAL NOTES

1. UNLESS OTHERWISE SPECIFIED:
   ALL RESISTOR VALUES ARE IN OHMS, ±10%, 1/2 WATT.
   K = 1000 OHMS.
   ALL CAPACITOR VALUES ARE IN MICROMICROFARADS.
   ALL COIL VALUES ARE IN MICROHENRIES.
2. IN SINGLE FREQUENCY MODELS C43 IS 8.2UUF AND L6 IS (BF1). IN TWO FREQUENCY MODELS C43 IS 4.7UUF AND L6 IS (BF2).
3. RECEIVER "FREQ 2" OSCILLATOR, TRANSMITTER "FREQ 2" OSCILLATOR AND "F1-F2" SWITCH ARE INCLUDED IN TWO FREQUENCY MODELS ONLY.
4. C40, C101, C302 & R144 ARE USED IN TWO FREQUENCY MODELS ONLY; IN SINGLE FREQUENCY MODELS R72, L23, R146 & L4 ARE TIED DIRECTLY TO GROUND.
5. ADJUST TO MAXIMUM DESIRED SPEAKER LEVEL WITH CONTROL HEAD VOLUME AT MAXIMUM.
6. FOR IGNITION SWITCH CONTROL DISCONNECT BLK. JUMPER W6 AND CONNECT W7 BETWEEN "S" TERMINAL AND "ACCESSORY TAP" OF VEHICLE IGNITION SWITCH.
7. JUMPER J1301 REMOVED AT FACTORY DISCRETION ONLY. (TO DECREASE GAIN OF PRE-AMPLIFIER).

MODEL TABLE

MODEL	DESCRIPTION
TUE 1000 AA-2	XMTR., RCVR. & POWER SUPPLY (1 FREQ)
TUE 1000 AG-2	XMTR., RCVR. & POWER SUPPLY (2 FREQ)

DIAGRAM NO. 63E856565

450-470 MC Mobile Radio Set
Schematic Diagram
Motorola No. 63E856565-A
10/58-UM

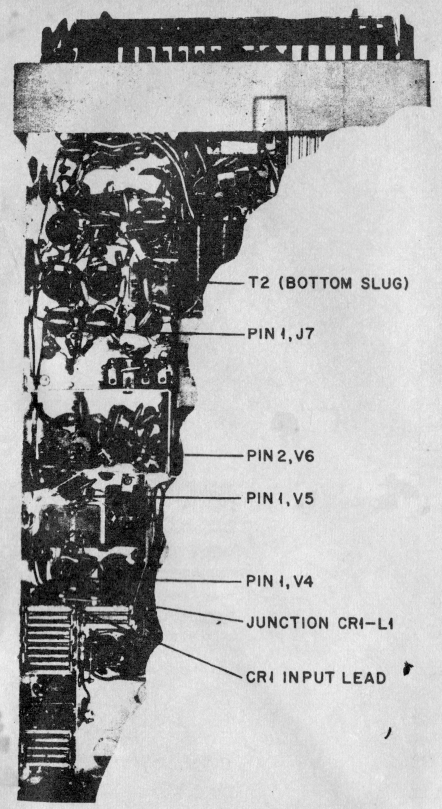

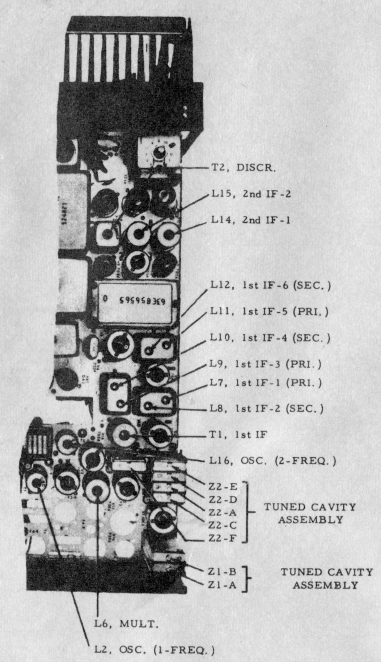

RECEIVER ALIGNMENT

ADJUSTMENT	USE TOOL	SWITCH POSITION	METER READING	TUNING	STAGE AND TUNING PROCEDURE
T2 bottom	A-hex	5	Peak	Fairly sharp	DISCRIMINATOR. Set up test set as described in para. I. at the left. Set up discriminator coil as shown in drawing at right. Connect 455 kc signal to pin 1, V7. Tune T2 bottom slug for peak (pos. 5), then tune top slug for zero (pos. 4). Do not turn slugs past first tuning point--a second (false) point can be found.
T2 top	A-hex	4	Zero	Sharp	Re-peak bottom slug (pos. 5); re-zero top slug (pos. 4).
L15	A-hex	2	Peak	Fairly broad	455 KC IF. Keep test meter set-up as above. Move r-f probe around near pin 1, V7, while watching meter. Find position where an increase of signal strength produces a linear rise in meter reading. Secure probe
L14	A-hex	2	Peak	Fairly broad	in this position to keep input at constant level. Tune L15 first, then L14 for peak meter reading.
L12	A-blade	2	Peak	Higher of 2	21 MC IF. Set up test equipment as in para. II at the left. Connect signal through 2 uuf capacitor to pin 1,
L11	A-blade	2	Peak	Very sharp	V5. Use minimum signal required for all 21 mc i-f adjustments. Tune L12 for peak. Tuning is very sharp.
L10	A-blade	2	Peak	Very sharp	Two peaks should be observed, one at 21 mc, the other at 21.455 mc (second oscillator freq.). Be sure
L9	A-blade	2	Peak	Very sharp	L12 is tuned to 21 mc peak, which is slightly higher than oscillator peak. If in doubt, take vtvm reading at
L8	A-blade	2	Peak	Very sharp	pin 2, V6. Reading of 0.1 to 0.2 v a-c indicates proper peak tuning; reading about twice this value indicates
L7	A-blade	2	Peak	Very sharp	wrong peak. Next tune L11 for peak (only one). Move 21 mc signal with 2 uuf capacitor in series to pin 1,
T1	A-hex	2	Peak	Fairly sharp	V4. Tune in order L10, L9, L8 and L7 for peak (only one). Next connect 21 mc signal through 2 uuf capa- citor to junction of CR1-L1. Tune T1 for peak by turning slug clockwise down from the top section of coil form (same as for T2). Do not tune beyond peak--second (false) peak can be found.
L2 (1-freq.)	B-blade	6	Peak	Fairly sharp	OSCILLATOR. No signal input. Adjust from top of chassis. Turn L2 slug cw to bottom of coil form. Rotate
L16 (2-freq.)	B-blade	6	Peak	Fairly sharp	slug slowly ccw, bringing it up into coil form. Watch meter; tune for peak and not reading. Turn slug slowly cw (down) until reading decreases by 1 ua. On 2-frequency models place the switch in F2 position and tune L16.
L6	A-hex	3	Peak	Fairly sharp	MULTIPLIER. No signal input. Tune L6 for peak with slug in top section of coil form (as in drawing).
Z3-F	B-slot	2	Peak	Fairly sharp	450-470 MC CAVITIES. Set up test equipment as in para. III at the left. Turn all cavity screws counter-
Z2-E	B-slot	2	Peak	Fairly broad	clockwise to end of travel (bottom). Then turn each screw approximately two turns clockwise. Connect signal
Z2-D	B-slot	2	Peak	Fairly broad	generator output to CR1 input. Turn Z3-F screw clockwise, tune for peak meter reading with switch in pos. 2.
Z2-A	B-slot	2	Peak	Fairly broad	As meter reading rises, reduce signal generator output. After peaking Z3-F, disconnect generator from CR1,
Z2-C	B-slot	2	Peak	Fairly broad	connect it to ANT jack, J3. Turn generator output up if necessary to get meter reading (pos. 2). Tune for
Z1-B (450-470 mc)	B-slot	2	Peak	Fairly broad	peak in order: Z2-E, -D, -A and -C. Then tune Z1-B znd Z1-A. Tune each cavity by turning screw clock- wise while watching meter for peak reading. As each cavity in order reaches a peak, reduce the signal generator output. Repeak all cavities and T1 with signal of 0.8 uv (or less).
Z1-G (406-420 mc)					
Z1-A	B-slot	2	Peak	Fairly broad	406-420 MC CAVITIES. Set up test equipment as in para. III at the left. Turn all cavity screws clockwise to end of travel (top). Then turn each screw approximately two turns counterclockwise. Connect signal gen- erator output to CR1 input. Turn Z3-F screw counterclockwise, tune for peak meter reading with switch in pos. 2. As meter reading rises, reduce signal generator output. After peaking Z3-F, disconnect generator from CR1, connect it to ANT jack, J3. Turn generator output up if necessary to get meter reading (pos. 2). Tune for peak in order: Z2-E, -D, -A and -C. The tune Z1-G and Z1-A. Tune each cavity by turning screw counterclockwise while watching meter for peak reading. As each cavity in order reaches a peak, reduce the signal generator output. Repeak all cavities and T1 with signal of 0.8 uv (or less).
F1-R (1-freq.)	B-blade	4	Zero	Very sharp	ON-FREQUENCY ADJUSTMENT. Transmit a carrier from the transmitter which this receiver is normally
F2-R (2-freq.)	B-blade	4	Zero	Very sharp	intended to receive. Listen for quieting of noise at test set speaker. Connect antenna to ANT jack if neces- sary. Check meter reading in position 4. Zero reading indicates on-frequency. If necessary, tune F1-R trimmer for zero meter reading. On two-frequency models, tune F2-R also, setting F1-F2 switch in corresponding position each time.

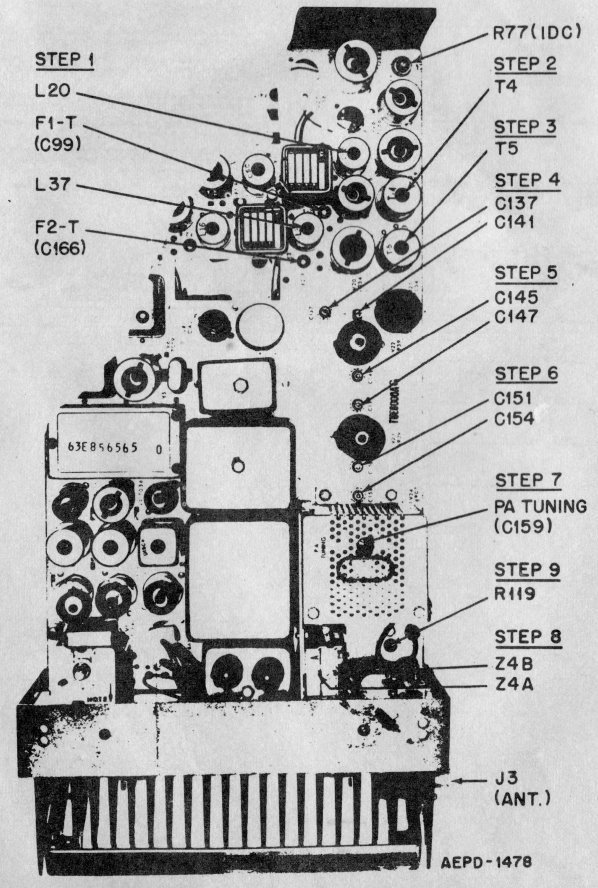

TRANSMITTER

STEP	SWITCH POSITION	CIRCUIT METERED	STAGE AND TUNING PROCEDURE
1	1	Osc. Grid	OSCILLATOR. FCC regulations require a periodic frequency check. If the check is due at this time, or if a check is required for any other reason, follow steps 1 through 4 in the right hand column.
2	2	V20 Grid	1ST DOUBLER PLATE--2ND DOUBLER GRID. Use hex end of tuning tool no. 66B859078. Tune slugs of T4, top first, then bottom. Tune for peak meter reading. Repeak both slugs.
3	3	V21 Grid	2ND DOUBLER PLATE--3RD DOUBLER GRID. Same tool as in step 2. Tune slugs of T5, top first, then bottom. Tune for peak. Repeak.
4	-4	V22 Grid	3RD DOUBLER PLATE--TRIPLER GRID. Use blade end of tool no. 66B859078. Tune C137 first, then tune C141. Tune for peak, then repeat this step (once).
5	5	V23 Grid	TRIPLER PLATE--I. P. A. GRID. Use blade end, 66B859078. Tune C145 first, then C147. Tune for definite peak (meter shows fixed bias). Repeak.
6	6	V24 Grid	I. P. A. PLATE--PA GRID. Use blade end, 66B859078. Tune C151 first, then C154. Tune for definite peak (meter always shows fixed bias). Repeak.
7	-	-	PA PLATE. Use slotted end of tool no. 66A835721. Adjust PA TUNING (C159) for peak rf power output. Use rf wattmeter, field strength meter or Motorola portable test set with dummy load.
8	-	-	HARMONIC FILTER, Z4. Use slotted end, tool no. 66A835721. Tune Z4A and Z4B for maximum power output. Repeak C159 and repeat tuning Z4A and Z4B.
9	PA	V24 Plate	FINALIZING ADJUSTMENTS. Carefully repeak all adjustments, steps 2-8. Calculate dc power input as follows: $P_{in} = I_p \times E_p$. I_p is PA position reading (0-50 ua scale) times 0.005. E_p is position 7 reading times 20 on P- Series Test Sets, or position 9 reading (0-1000 v dc scale) on TU546 Test Sets. If P_{in} exceeds 50 watts reduce I_p by adjusting R119. DO NOT ADJUST R119 FOR MORE THAN 50 WATTS INPUT TO FINAL.

RECEIVER

carrier frequency (mc) → $f_c - 9f_o$ = 21 mc (first intermediate frequency)

injection frequency ($9f_o$)

multiplication factor (9)

crystal oscillator frequency, f_o (mc)

CRYSTAL FREQUENCY CALCULATION

xtal freq. in mc (unknown) → $f_o = \frac{f_c}{24}$ ← carrier freq. in mc (known)

TRANSMITTER

U44BBT ALIGNMENT DATA

v.20240312_14:35:29

This great old book from 1960 is today nearly impossible to find, and was 64 years old as well as very well-worn at the time of scanning. The best compromise with the available gear was used to firstly preserve readability and usefulness. Scanning: 600DPI, 8 bit gray, 11x17 original format.

We are grateful to the original author, Sherman M Wolf, and to Motorola for the original physical publication decades ago, which has now become very rare.

It is our hope that Motorola hobbyists and collectors will enjoy this poor imitation of the original volume, and find it useful for the educational and antique equipment repair purposes for which this effort has been made.

This volume is not for resale, on peril of one's honor. It is our hope that it will remain free to download on the internet so that hobbyists, collectors, and learners may enjoy all aspects of the classical Motorola products of long ago.

Sincerely,

Keeper of the Coaxial Cables